CKD

Pneumatic Components for Clean Room Specification

Pneumatic Cylinders | Directional Switching Valve | FR Unit

Pneumatic Auxiliary Component | Air Unit Components

Sensor | Air Blow Valve

Vol. 5

Catalog No. CB-033SA-5

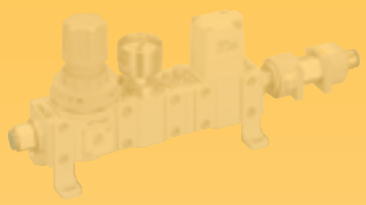

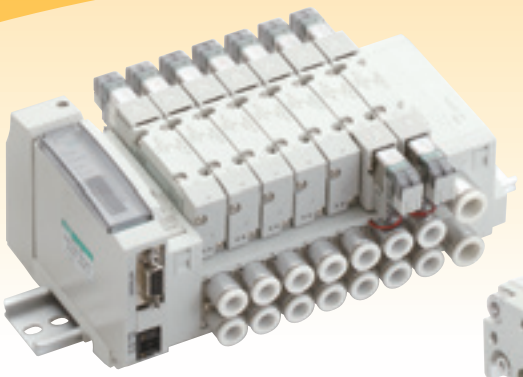

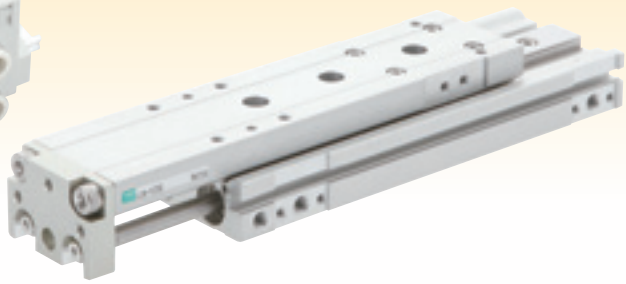

Production System Built on a Clean Concept

CKD Clean Component System for use in clean rooms

CKD Clean Components, developed for clean rooms, realizes CKD's original clean concept. Models suited for applications from the level of cleanliness to installation site, environment and processes are available.

CKD CLEAN CONCEPT

Production system preventing foreign matter from entering clean rooms

Products assembled in each process pass through inspection and are showered with ultra-clean air.
All dust is removed here and the product is packed in an electrostatic-discharge-proof (ESD-proof) bag at a Class 100 clean bench before shipping.

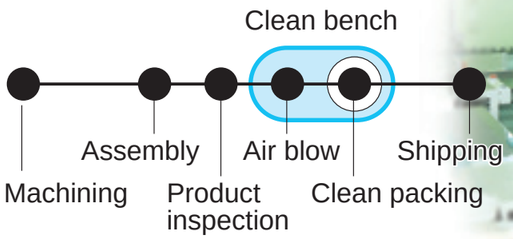

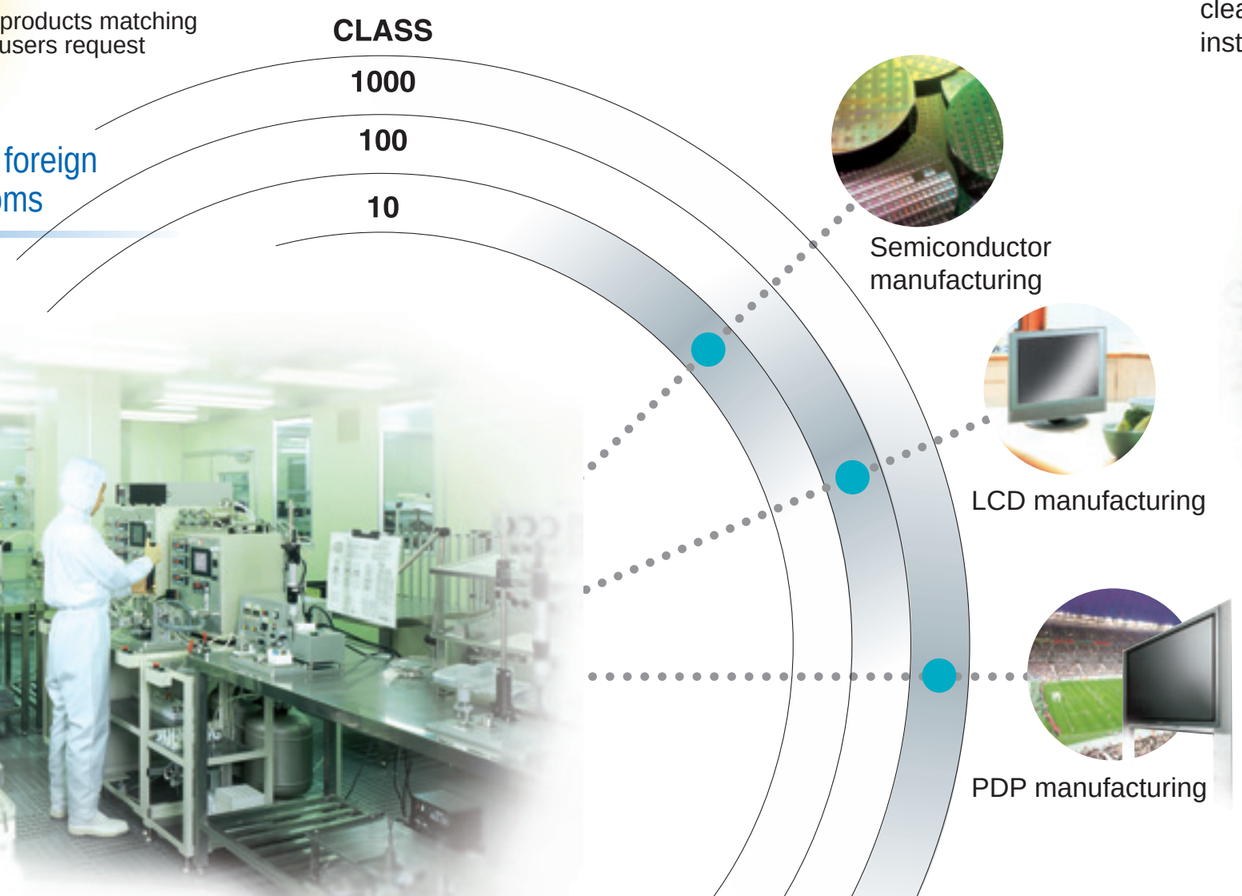

Providing products matching the purity users request

Models can be selected based on the target clean room's cleanliness and installation site and on manufacturing requirements.

Cylinder Clean packed

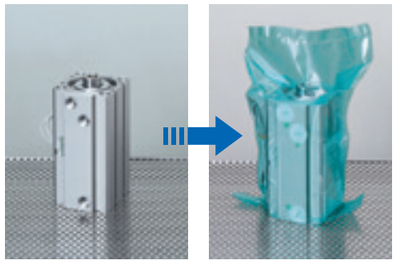

Purging dust

(1) A vacuum sweeps particles and (2) an external exhaust processing prevents compressed air from being discharged into the clean environment where the component is installed. Dust is purged to the outside.

Clean class

Standard	FED Standard (209D)	ISO14644-1	JISB9920
Class notation	Class 1	ISO 3	JIS3
	Class 10	ISO 4	JIS4
	Class 100	ISO 5	JIS5
	Class 1000	ISO 6	JIS6
	Class 10000	ISO 7	JIS7

INDEX

Air-operated component system

Selection guide — Introduction 3

Circuit structure — Introduction 5

Industry-specific clean room specifications — Introduction 6

Pneumatic control system

Industry-specific clean room specifications — Introduction 7

Clean blow system

Sample circuits, Industry-specific clean room specifications — Introduction 8

Clean room component system table

Introduction 9

Dust generation measuring method — Introduction 10

Guide to the CKD Electronic Catalog

Introduction 11

Safety precautions — Introduction 13

Related products

Ending 1

Previous products

Ending 29

Our products

Ending 45

About SI units

Ending 66

Index (index in alphabetical order)

Ending 72

Pneumatic cylinders, Electric linear actuator

Directional switching valve

F.R. unit

Pneumatic auxiliary components

Air unit components

Sensors

Valve for air blow

		Page
Standard	Pencil shaped cylinder — SCPD3	7
	Round shaped cylinder — SCM	23
	Compact cylinder — SSD2	47
Space saving structure	Compact direct mounting cylinder — MDC2	59
	Compact cylinder — SMG	73
Combined functions	Linear slide cylinder — LCM	91
	Linear slide cylinder — LCR	107
	Linear slide cylinder — LCG	143
	Thin linear slide cylinder — LCX	173
	Guided cylinder — STM	199
	Guided cylinder — STG	211
	Twin rod cylinder — STR2	237
Rodless	Magnet rodless cylinder — MRL2	261
Sliding/rotational drive	Table rotary actuator — GRC	281
Cylinder switch	Cylinder switch guide	309
3, 4, 5-port valve	Small pilot operated 3, 4-port valve — MN3E/MN4E Series	335
	Pilot operated 3, 5-port valve — 4GA/4GB Series	419
Modular design F/R	Filter/regulator — W*000/W*100	767
	Air filter/oil mist filter — F*000/M*000/MX*000	
	Regulator — R*000/R*100	
Clean F/R	Inline clean filter — FCS500/1000	812
	Clean exhaust filter — FAC	822
	Clean regulator/regulator — RC2000/2619	832
Precision regulator	Precision regulator — RP*000	845
Auxiliary components	Pressure gauge — G49D/G59D	858
	Differential pressure gauge — GA400-8A	859
Electro pneumatic regulator	Electro pneumatic regulator — EV2100V	862
	Thin electro pneumatic regulator — MEVT	866
Speed Controller	Speed controller — DSC/SC3R/SC3W/SC1	897
	Line type speed controller, needle valve — SCL2/SCD2/SCL2-N	
Auxiliary valve	Check valve — CHL/CHV2	929
	Quick valve — 2QV	
Fitting/tube	Fittings, fittings — F/GW/GWJ/ZW	943
	Fiber tube	
	Tube	
Clean air unit	Clean air unit — CAU30	999
Pressure sensor Flow rate sensor	Electronic pressure switch — PPE/PPD3-S	1015
	Compact flow rate sensor (RAPIFLOW) — FSM3/FSM-VFM	1045
2-port valve	Direct acting 2-port valve — FVB	1128
	Pilot kick 2-port valve — ADK-Z	1131

INDEX

Satisfies the various levels of clean room cleanliness in a wide range of industries.

Air-operated actuator system selection guide

CKD offers various air-operated actuators as our major products for clean room specifications. The optimum model varies depending on the level of cleanliness and the location where the device is to be placed. Read the guideline carefully and choose the optimum model.

Standard cylinder

Exhaust treatment
P7 Series P5 Series

This has double rod packing. Dust is released outside the clean room through the pipe connected to the relief port in the middle section.

Vacuum treatment
P71 Series P51 Series

A relief port is provided at the sliding section of the piston rod on the outer side of rod packing. Dust is sucked up and released through this port.

Guided cylinder

Low particle occurrence exhaust treatment
P72 Series P52 Series

Double rod packing is incorporated as with the standard cylinder. Dust is released outside the clean room through the pipe connected to the relief port in the middle section.
Low dust grease is used in the sliding section (piston rod, guide rod, linear guide). Only grease is replaced as a countermeasure against dust generation from the guide area.

Low particle occurrence vacuum treatment
P73 Series P53 Series

As with the standard cylinder, a relief port is provided at the sliding section of the piston rod on the outside of rod packing. Dust is sucked up and released through this port with vacuum.
Low dust grease is used in the sliding section (piston rod, guide rod, linear guide). Only grease is replaced as a countermeasure against dust generation from the guide area.

Selection guide based on the relationship between the cleanliness of the clean room and the location where the device is to be placed

Based on the required level of cleanliness on the surface of the workpiece, the air flow around the workpiece, and the cylinder location, select a model using the following table as a guide.

Model for which its rod is the only sliding part/Standard cylinder (P*/P*1 Series)

Pneumatic cylinder to control dust generation in a clean room (P7 Series)

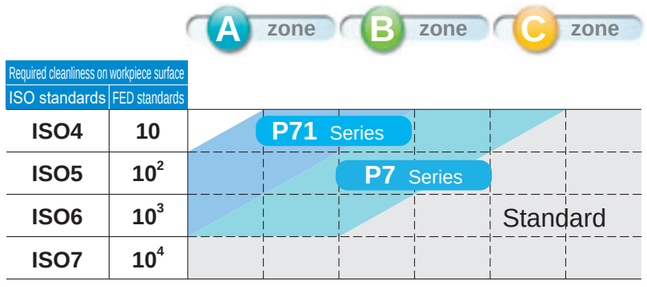

P71 Series
Vacuum treatment/Single packing construction

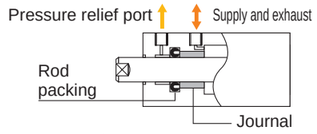

P7 Series
Exhaust treatment/Double packing construction

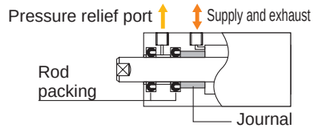

Pneumatic cylinder to control dust generation in a clean room and incompatible with copper-based, silicon-based and halogen-based materials (P5 Series)

Custom order product

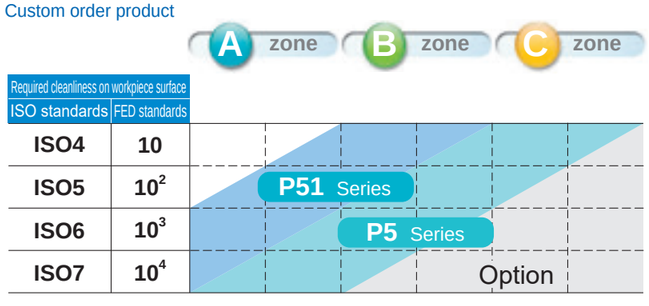

P51 Series
Vacuum treatment/Single packing construction

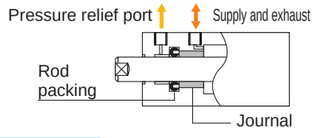

P5 Series
Exhaust treatment/Double packing construction

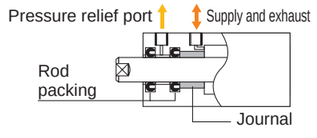

How dust generation affects cleanliness of the clean room depends on where the device is placed.

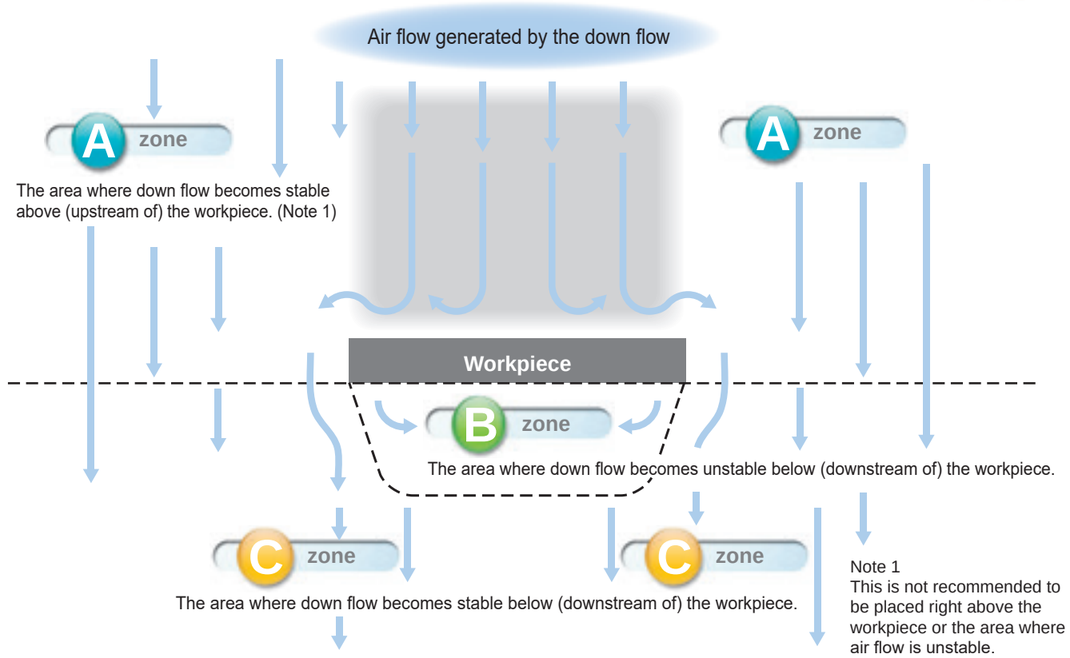

Model which has external sliding parts/Guided cylinder (P*2/P*3 Series)

Pneumatic cylinder to control dust generation in a clean room (P7 Series)

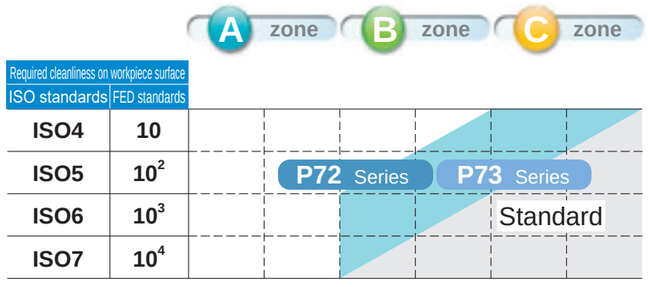

P72 Series
Exhaust treatment/Double packing construction

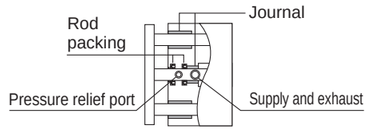

P73 Series
Vacuum treatment/Single packing construction

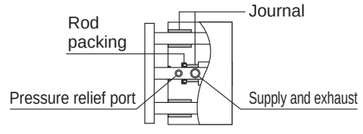

Pneumatic cylinder to control dust generation in a clean room and incompatible with copper-based, silicon-based and halogen-based materials (P5 Series)

Custom order product

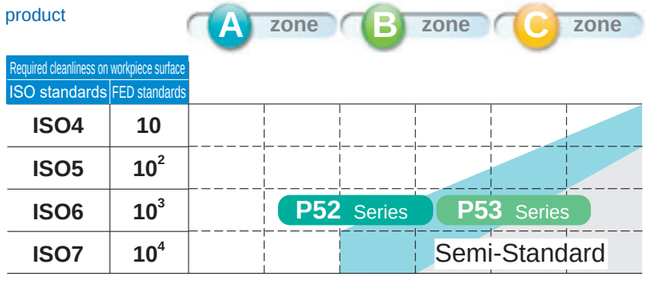

If the device has an external sliding part, A zone is not recommended as diameters of the particles are greater compared to the device for which its rod is the only sliding part.

P52 Series
Exhaust treatment/Double packing construction

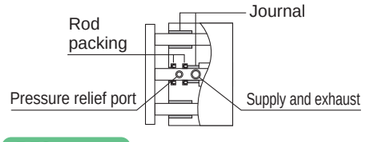

P53 Series
Vacuum treatment/Single packing construction

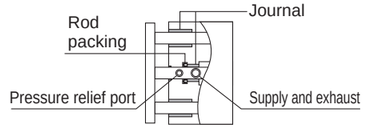

Targeting zero particle generation with vacuum and exhaust treatment.

Air-operated actuator system circuit structure

This illustrates a typical circuit of an air-operated device system which consists of pneumatic cylinders, switchover valves, speed controllers, and F/R devices as a clean room device system.
With this system, dust is sure to be released outside the clean room.

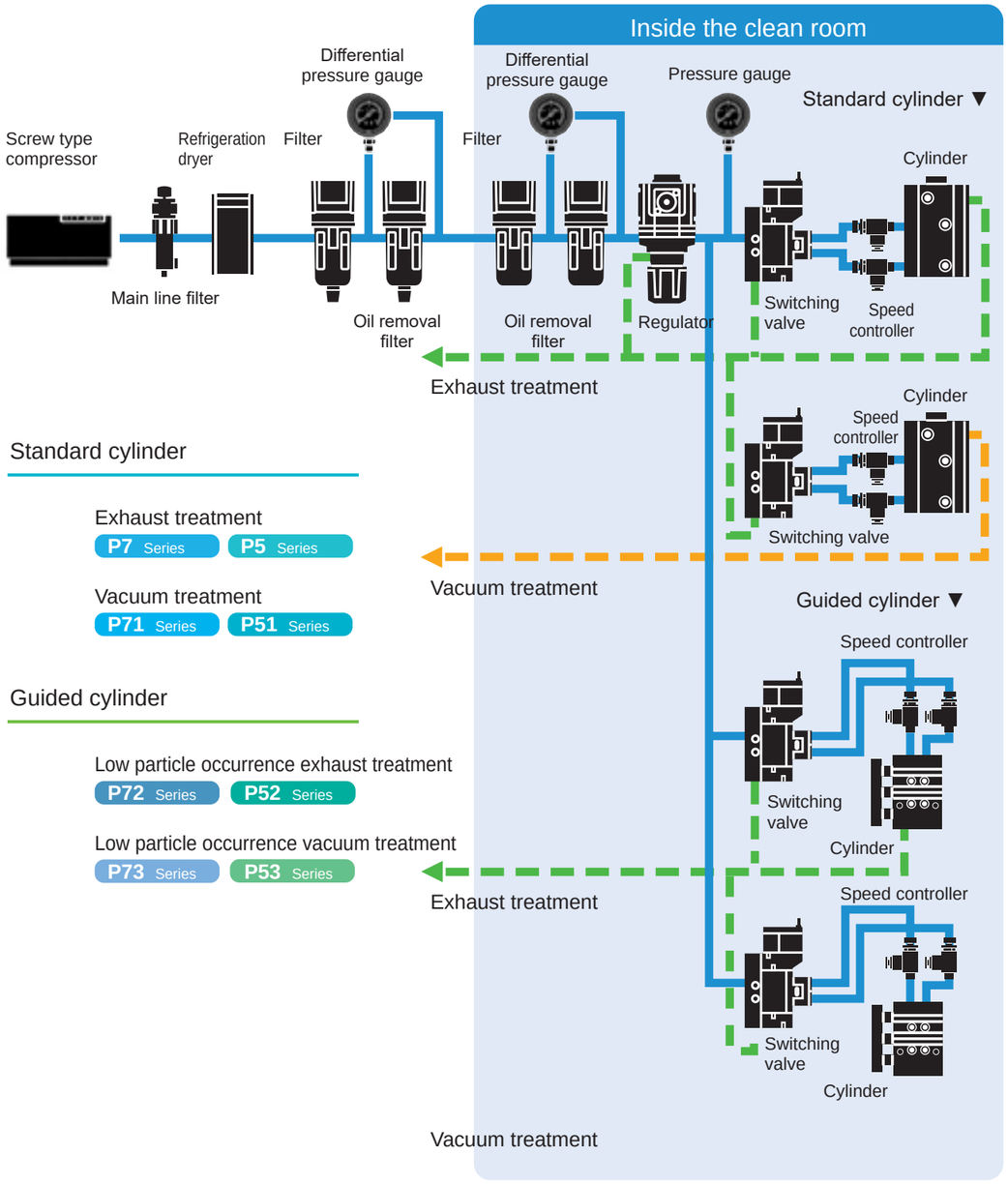

[Remark]

Note: Cylinders, switching valves, regulators, and filters should all have individual exhaust pipes. Do not share the exhaust piping.

Two series of pneumatic cylinders for various applications.

(Exhaust treatment and vacuum treatment)

CLEAN philosophy — Prevent Purge Provide

Industry-specific clean room specifications for air-operated equipment systems

Construction of the pneumatic cylinder and materials vary depending on the industry for which the equipment is to be used. CKD offers two different groups of air-operated devices to satisfy different requirements for various industries. The clean room specifications shown here is for the pneumatic cylinders, which are the major components of the system.

Semiconductor — Clean room specifications for LCD manufacturing

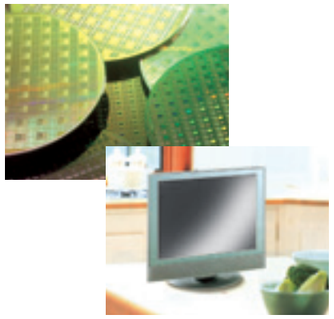

Pneumatic cylinder series to control dust generation in a clean room.

Standard

P7 Series
- Exhaust treatment port place in the piston rod sliding area
- Double packing construction

P71 Series
- Vacuum treatment port place in the piston rod sliding area
- Single packing construction

Guided

P72 Series
- Exhaust treatment port place in the piston rod sliding area
- Double packing construction
- Low dust generation treatment of the guide area

P73 Series
- Vacuum treatment port place in the piston rod sliding area
- Single packing construction
- Low dust generation treatment of the guide area

Clean room specifications for manufacturing industries with material restrictions (custom order product)

Pneumatic cylinder to control dust generation in a clean room without using copper-based, silicon-based and halogen-based materials.

Standard

P5 Series
- Exhaust treatment port place in the piston rod sliding area
- Double packing construction
- Copper-based/silicon-based/halogen-based materials (fluorine, chlorine, bromine) are prohibited

P51 Series
- Vacuum treatment port place in the piston rod sliding area
- Single packing construction
- Copper-based/silicon-based/halogen-based materials (fluorine, chlorine, bromine) are prohibited

Guided

P52 Series
- Exhaust treatment port place in the piston rod sliding area
- Double packing construction
- Low dust generation treatment of the guide area
- Copper-based/silicon-based/halogen-based materials (fluorine, chlorine, bromine) are prohibited

P53 Series
- Vacuum treatment port place in the piston rod sliding area
- Single packing construction
- Low dust generation treatment of the guide area
- Copper-based/silicon-based/halogen-based materials (fluorine, chlorine, bromine) are prohibited

Selecting the optimum pneumatic pressure control system for the application.

Industry-specific clean room specifications for pneumatic control systems

Specifications for pneumatic valves, filters, and regulators vary from application to application.
In this section, the clean room specifications of devices other than the pneumatic cylinder, such as directional switchover valves, filters, regulators, speed controllers, fittings and tubes are shown.

Semiconductor — Clean room specifications for LCD manufacturing

Pneumatic control system series to control dust generation in a clean room.

Directional switching valve

P70 Series
- Exhaust treatment port

Filters and regulators

P70 Series
- Exhaust treatment port

P80 Series
- Oil prohibited

P90 Series
- Made of stainless steel
- Oil prohibited

Sensors, auxiliary devices, fittings, and tubes

P70 Series
- Dust generation control

P80 Series
- Oil prohibited

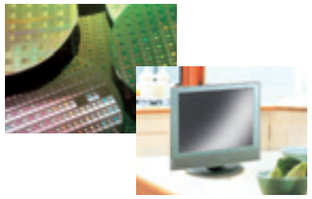

Clean room specifications for manufacturing industries with material restrictions

Pneumatic control system to control dust generation in a clean room without using copper-based, silicon-based, and halogen-based materials.

Directional switching valve

P74 Series
- Exhaust treatment port
- Copper-based/silicon-based/halogen-based materials (fluorine, chlorine, bromine) are prohibited

Filters and regulators

P74 Series
- Exhaust treatment port
- Copper-based/silicon-based/halogen-based materials (fluorine, chlorine, bromine) are prohibited

P84 Series
- Oil prohibited
- Copper-based/silicon-based/halogen-based materials (fluorine, chlorine, bromine) are prohibited

P94 Series
- Oil prohibited
- Wetted parts: made of stainless steel
- Copper-based/silicon-based/halogen-based materials (fluorine, chlorine, bromine) are prohibited

Sensors, auxiliary devices, fittings and tubes

P74 Series
- Dust generation control
- Copper-based/silicon-based/halogen-based materials (fluorine, chlorine, bromine) are prohibited

P84 Series
- Oil prohibited
- Copper-based/silicon-based/halogen-based materials (fluorine, chlorine, bromine) are prohibited

Capable of steadily producing air of high cleanliness.

CLEAN philosophy — Purge, Prevent, Provide

Sample clean blow system circuit and industry-specific clean room specifications

Recommended products and sample circuits for providing the air blow system with air of high cleanliness are shown.
CKD offers two different groups of devices for the clean air blow system to satisfy different requirements for various industries. Clean room specifications for various industries are shown.

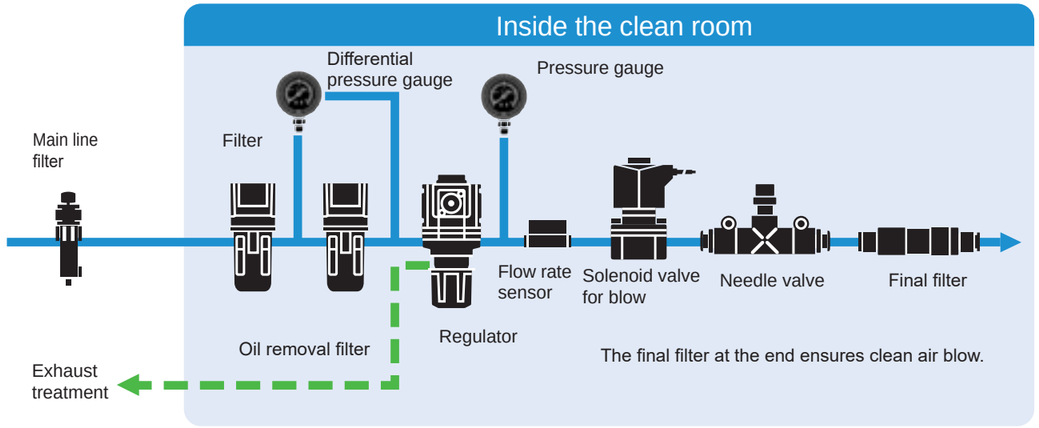

Semiconductor — Clean room specifications for LCD manufacturing

Solenoid valve for blow

P90 Series
- Oil prohibited
- Low dust generation treatment
- Wetted parts made of stainless steel (copper-based material not allowed)

Sensors

P80 Series
- Oil prohibited

P90 Series
- Oil prohibited
- Wetted parts made of stainless steel

Filters and regulators

P80 Series
- Oil prohibited

P90 Series
- Oil prohibited
- Wetted parts made of stainless steel

Fittings, tubes and auxiliary devices

P80 Series
- Oil prohibited

Clean room specifications for manufacturing industries with material restrictions

Solenoid valve for blow

P94 Series
- Oil prohibited
- Low dust generation treatment
- Wetted parts made of stainless steel (copper-based material not allowed)
- Silicon-based/halogen-based materials (fluorine, chlorine, bromine) are prohibited

Sensors

P84 Series
- Oil prohibited
- Silicon-based/halogen-based materials (fluorine, chlorine, bromine) are prohibited

P94 Series
- Oil prohibited
- Wetted parts made of stainless steel
- Silicon-based/halogen-based materials (fluorine, chlorine, bromine) are prohibited

Filters and regulators

P84 Series
- Oil prohibited
- Silicon-based/halogen-based materials (fluorine, chlorine, bromine) are prohibited

P94 Series
- Oil prohibited
- Wetted parts made of stainless steel
- Silicon-based/halogen-based materials (fluorine, chlorine, bromine) are prohibited

Fittings, tubes and auxiliary devices

P84 Series
- Oil prohibited
- Silicon-based/halogen-based materials (fluorine, chlorine, bromine) are prohibited

Clean room device system table

Major applications	Code	Basic specifications: Material restrictions	Basic specifications: Structure	Models and remarks: Cylinder	Pneumatic valves	Control valve	Electronic sensors	Filters and regulators	Tubes, fittings, and auxiliary devices
Semiconductor and LCD	P7	Fluorine-based grease is used	Exhaust treatment clean room package	○	—	—	—	—	—
	P70	(Dust generation control)		—	Exhaust treatment clean room package	—	Oil prohibited	Fluorine-based grease is used Exhaust treatment clean room package	Fluorine-based grease equivalent is used No sealing agent Clean room package
	P71	Fluorine-based grease is used	Vacuum treatment clean room package	○	—	—	—	—	—
	P72	Fluorine-based grease is used	Low dust generation treatment clean room package for the exhaust treatment guide area (Note 1)	○	—	—	—	—	—
	P73	Fluorine-based grease is used	Low dust generation treatment clean room package for the vacuum treatment guide area	○	—	—	—	—	—
	P80	Oil prohibited	Clean room package	—	—	—	○	Exhaust treatment	No sealing agent
	P90	Oil prohibited Stainless steel is used	Clean room package	—	—	Low dust generation treatment	—	Exhaust treatment	Copper-based materials prohibited (all parts) No sealing agent
Clean + Material restrictions	P5	Copper-based materials in (sliding and flow path parts) prohibited Silicon- and Halogen-based materials prohibited	Exhaust treatment clean room package	○	—	—	—	—	—
	P51	Copper-based materials in (sliding and flow path parts) prohibited Silicon- and Halogen-based materials prohibited	Vacuum treatment clean room package	○	—	—	—	—	—
	P52	Copper-based materials in (sliding and flow path parts) prohibited Silicon- and Halogen-based materials prohibited	Low dust generation treatment clean room package for the exhaust treatment guide area	○	—	—	—	—	—
	P53	Copper-based materials in (sliding and flow path parts) prohibited Silicon- and Halogen-based materials prohibited	Low dust generation treatment clean room package for the vacuum treatment guide area	○	—	—	—	—	—
	P74	Copper-, Silicon- and Halogen-based materials prohibited	Clean room package	—	Exhaust treatment	—	Copper-based materials prohibited (sliding and flow path parts) oil free	Fe materials prohibited PTFE (fluoroplastics) prohibited Fluorine-based grease is used for exhaust treatment	Fluorine-based grease prohibited No sealing agent
	P84	Copper-, Silicon- and Halogen-based materials prohibited, oil prohibited	Clean room package	—	—	—	Copper-based materials prohibited (sliding and flow path parts)	Fluorine-based grease is used for exhaust treatment	Fluorine-based grease prohibited No sealing agent
	P94	Copper-, Silicon- and Halogen-based materials prohibited, S.S. used, oil prohibited	Clean room package	—	—	—	○	Fluorine-based grease is used for exhaust treatment	—

Note 1: For MRL2 series, the sliding parts are processed to minimize dust.

Dust generation measuring method

Measuring instrument

Particle counter : Laser dust monitor
Minimum measurable particle diameter : 0.1 μm
Suction rate : 28.3 ℓ/min

Test circuit

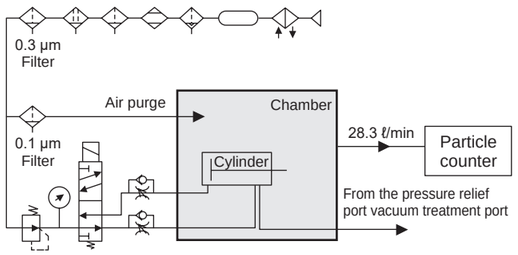

Measuring method

1. Place a cylinder in an antistatic chamber made of acrylic or stainless steel.
2. Send clean air passed through a 0.1 μm filter at the same flow rate as the particle counter suction rate (28.3 ℓ/min).
3. Confirm that the particle counter value is zero before you start operating the cylinder.
4. Operate the cylinder, and measure particles generated during the operation.

Note: A sealed chamber is used so that particles other than those generated from the test cylinder do not enter the chamber.

Measuring conditions

- Quality of air
  For driving the cylinder: "Grade 2.2.1" (JIS B8392−1)
  For purging: "Grade 2.2.1" +0.1 μm gas filter
- Cylinder supply pressure: 0.5 MPa
- Cylinder operating speed: general speed (200 mm/s)
- Operating condition: no load; horizontally mounted (parallel to the purge flow)
- Relief port for exhaust treatment is connected and released outside the chamber.
- Vacuum port for vacuum treatment is connected and vacuum treated at −26 KPa.

Dust generation measuring

● CMK2 (port size 25, stroke length 50)

Number of endurance cycles: initial state
Operating frequency: 40 cpm

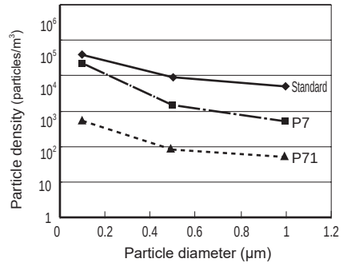

● STR2 (port size 20, stroke length 30)

Number of endurance cycles: initial state
Operating frequency: 30 cpm

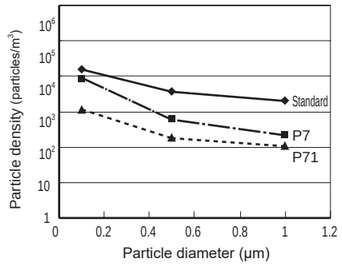

● MRL2 (port size 16, stroke length 200)

Number of endurance cycles: initial state
Operating frequency: 30 cpm

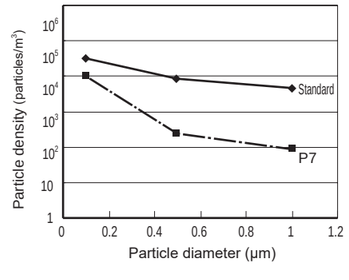

Guide to CKD CAD data

Guide to CKD CAD data

CKD's CAD data is provided for your use in CAD design as follows.

2D CAD data

Compatible CAD types
- DXF
- Dedicated CAD types

3D CAD data

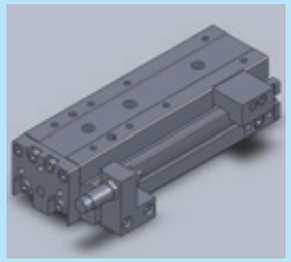

Compatible CAD types
- DXF
- IGES
- SAT
- Parasolid
- Dedicated CAD types

Homepage

Catalog PDFs and CAD data of CKD products are available for download.

https://www.ckd.co.jp/en/

For PDF and DXF data of the general catalogs,

CKD website Products / Support > Materials / Downloads Digital catalogs / Catalog PDFs

For PDF and DXF data of new products,

CKD website Products / Support > Search product list Search new products

For 2D/3D CAD data

CKD website Products / Support > Materials / Downloads 2D / 3D CAD data

Guide to the model selection system

How to use the model selection system

The CKD system supports selection of the following items.
For your use during model selection and design.

Available on our website

This system is used to select products according to your application and working conditions.

*Downloading Software may not be possible due to your security settings. Contact CKD for further information.

Selection results are linked with catalog PDFs and CAD data!

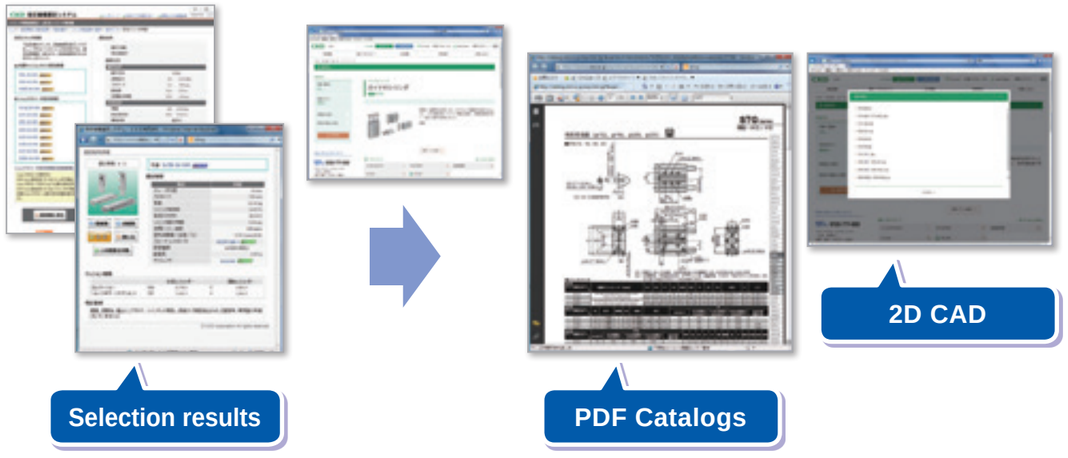

Registration not required - available at any time!

A variety of services such as CKD product catalogs, PDF, CAD data, model selection, etc., are available. Feel free to try them.

https://www.ckd.co.jp/en/

Safety Precautions

Be sure to read this section before use.

When designing and manufacturing equipment using CKD products, the manufacturer is obligated to ensure that the safety of the mechanism, pneumatic control circuit and/or water control circuit and the system that runs the electrical controls are secured.
It is important to select, use, handle and maintain CKD products appropriately to ensure their safe usage.
Observe warnings and precautions to ensure device safety.
Check that device safety is ensured, and manufacture a safe device.

WARNING

1 This product is designed and manufactured as a general industrial machine part. It must be handled by an operator having sufficient knowledge and experience.

2 Use this product in accordance with specifications.

This product must be used within its stated specifications. In addition, never modify or additionally machine this product.
This product is intended for use in general industrial machinery equipment or parts. It is not intended for use outdoors (except for products with outdoor specifications) or for use under the following conditions or environments. (Note that this product can be used when CKD is consulted prior to its usage and the customer consents to CKD product specifications. The customer should provide safety measures to avoid danger in the event of problems.)

❶ Use for applications requiring safety, including nuclear energy, railways, aircraft, marine vessels, vehicles, medical devices, devices or applications in contact with beverages or foodstuffs, amusement devices, emergency cutoff circuits, press machines, brake circuits, or safety devices or applications.
❷ Use for applications where life or assets could be significantly affected, and special safety measures are required.

3 Observe organization standards and regulations, etc., related to the safety of the device design and control, etc.

ISO4414,JIS B 8370(Pneumatic fluid power - General rules and safety requirements for systems and their components)
JFPS2008(Principles for pneumatic cylinder selection and use)
Including the High Pressure Gas Safety Act, Industrial Safety and Health Act, other safety rules, organization standards and regulations, etc.

4 Do not handle, pipe, or remove devices before confirming safety.

❶ Inspect and service the machine and devices after confirming safety of the entire system related to this product.
❷ Note that there may be hot or charged sections even after operation is stopped.
❸ When inspecting or servicing the device, turn OFF the energy source (air supply or water supply), and turn OFF power to the facility. Discharge any compressed air from the system, and pay enough attention to possible water leakage and leakage of electricity.
❹ When starting or restarting a machine or device that incorporates pneumatic components, make sure to secure system safety, such as pop-out prevention measures.

5 Observe the warnings and cautions on the following pages to prevent accidents.

■ Precautions are ranked as “DANGER”, “WARNING”, and “CAUTION” in this section.

DANGER:	In the case where the product operation is mishandled and/or when the urgency of a dangerous situation is high, it may lead to fatalities or serious injuries.
WARNING:	A dangerous situation may occur if handling is mistaken, leading to fatal or serious injuries.
CAUTION:	A dangerous situation may occur if handling is mistaken, leading to minor injuries or property damage.

Note that some items indicated with “CAUTION” may lead to serious results depending on the conditions.
All items contain important information and must be observed.

Warranty

1 Warranty period

The product specified herein is warranted for one (1) year from the date of delivery to the location specified by the customer.

2 Warranty coverage

If the product specified herein fails for reasons attributable to CKD within the warranty period specified above, CKD will promptly provide a replacement for the faulty product or a part thereof or repair the faulty product at one of CKD’s facilities free of charge.
However, following failures are excluded from this warranty:

1) Failure caused by handling or use of the product under conditions and in environments not conforming to those stated in the catalog, the Specifications, or the Instruction Manual.
2) Failure caused by use of the product exceeding its durability (cycles, distance, time, etc.) or caused by consumable parts.
3) Failure not caused by the product.
4) Failure caused by use not intended for the product.
5) Failure caused by modifications/alterations or repairs not carried out by CKD.
6) Failure caused by reasons unforeseen at the level of technology available at the time of delivery.
7) Failure caused by acts of nature and disasters beyond control of CKD.

The warranty stated herein covers only the delivered product itself. Any loss or damage induced by failure of the delivered product is excluded from this warranty.
Note: For details on the durability and consumable parts, contact your nearest CKD sales office.

3 Compatibility check

The customer is responsible for confirming the compatibility of CKD products with the customer’s systems, machines and equipment.

Precautions for export

1 Security Trade Control

The products in this catalog and their related technologies may require approval before export or provision.
For the sake of maintaining world peace and safety, there may be cases in which approval under the Foreign Exchange and Foreign Trade Control Law is required in advance, depending on the country to where the product or related technology is being exported or provided.
The scope of products and related technologies requiring approval are listed in the Export Trade Control Order Appendix Table 1 or Foreign Exchange Order Appendix Table.
The Export Trade Control Order Appendix Table 1 and Foreign Exchange Order Appendix Table contain the following two types of information.

· “List controls” specified for items 1 to 15
· “Catch-all controls” that do not indicate specifications by item, but restriction by application (Section 16)

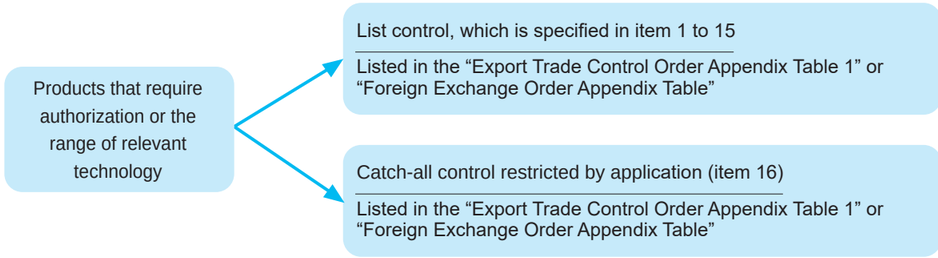

An application for approval is received by the Security Export Licensing Division of the Ministry of Economy, Trade and Industry or local bureaus of the Ministry of Economy, Trade and Industry.

2 Products and related technologies in this catalog

The products and related technologies in this catalog are subject to the catch-all control of the Foreign Exchange and Foreign Trade Control Law.
When exporting or providing the products or related technologies in this catalog, ensure that they are not used for arms or weapons.

3 Contact

Contact your local CKD Sales Office for information on the Security Trade Control of products and related technologies in this catalog.

MEMO

Pneumatic cylinder

	Page
Safety precautions	2
Standard	
Pencil shaped cylinder **SCPD3** Series	7
Round shaped cylinder **SCM** Series	23
Space saving structure	
Compact cylinder **SSD2** Series	47
Compact direct mounting cylinder **MDC2** Series	59
Compact cylinder **SMG** Series	73
Combined functions	
Linear slide cylinder **LCM** Series	91
Linear slide cylinder **LCR** Series	107
Linear slide cylinder **LCG** Series	143
Linear slide cylinder **LCX** Series	173
Guided cylinder **STM** Series	199
Guided cylinder **STG** Series	211
Twin rod cylinder **STR2** Series	237
Rodless	
Magnet rodless cylinder **MRL2** Series	261
Oscillation/rotational drive	
Table type rotary actuator **GRC** Series	281
Cylinder switch	
T/K/F Series	309

Pneumatic components (cylinders)

Safety Precautions

Always read this section before use.
Refer to the main text for detailed precautions for each series and to page 320 for those for the cylinder switch.

Design & selection

WARNING

■ Use the product in the range of conditions specified for the product.
The product in this catalog is designed for use only in a compressed air system. Use with pressure or temperature exceeding the specifications range may result in damage or operation faults. (Refer to specifications) Contact CKD when using fluids other than compressed air and low hydraulic pressure.

■ With the cylinder, there is the risk of the piston rod popping out in cases when a change of force occurs due to disruption of the sliding portions of the machine.
This could cause physical harm, such as pinched hands or feet, or mechanical damage. Adjust the machines so that they operate smoothly and design so that physical harm will be avoided.

■ If there is a risk of bodily injuries, install a protective cover.
If the cylinder's drive section could cause bodily injury, install a protective cover. Design a structure that prevents person(s) from entering the cylinder's operating range or coming into contact with those sections directly.

■ If requiring deceleration circuit and shock absorber.
If the driven object moves at high speeds or is very heavy, it may be difficult to absorb impact with the cylinder cushion alone. Take measures to ease impact by installing a deceleration circuit before the cushion or by using an external shock absorber. The machine's rigidity must also be considered.

■ Consider the possibility that the circuit pressure may be decreased by electrical power failure.
When using a cylinder in clamp mechanisms, blackouts, etc., may cause the circuit pressure to drop, reducing the clamping force and risking falling workpieces. Incorporate a safety device that prevents physical harm or mechanical damage. Suspension mechanisms and lifting devices should also be considered for position locking.

■ Consider the possibility of power source failure.
For devices controlled with power sources such as pneumatics, hydraulics, or electricity, take measures to prevent bodily injury or machine damage if power fails.

■ Design the operating circuit to prevent the piston from popping out.
If one side of the piston is pressurized after the air in the cylinder is released, such as when the cylinder is driven by an exhaust center type directional control valve, or during startup after the residual pressure in the circuit is discharged, the driven object will pop out at high speed. This could cause physical harm, such as pinched hands or feet, or mechanical damage. Design with a circuit to prevent popping out.

■ Consider the operation status at emergency stop.
If the safety device is activated and the machine stops during a system failure such as emergency stop or power outage, design the system so that physical harm or damage to the workpiece/ device/equipment does not occur due to cylinder operation.

■ Consider the operation status when restarting after emergency stop or abnormal stop.
Design the system so that bodily injury or equipment damage will not occur when restarting. If there is a need to reset the cylinder to the starting position, design a safe control device.

■ Intermediate stop
When braking the cylinder's piston with a 3-position closed center directional control valve, air compressibility may make it difficult to stop as accurately as when using low hydraulics. In addition, since valves and cylinders do not guarantee zero air leakage, holding the stop position for long periods may not be possible. Consult with CKD when requiring a stop position to be held for long periods.

■ Use clean dry compressed air.
Do not use the compressed air if it contains chemicals, synthetic oils containing organic solvents, salt, or corrosive gas, as it can cause damage and/or operation failure.

■ Install the product where it will not be exposed to rain, water, direct sunlight, or high temperatures.

■ Do not use this product in a corrosive environment.
Use in such an environment could lead to damage or operation failure. Though piston rods, tie rods, etc. used in the cylinder are plated materials, machining parts (thread surface width, cut surface) are not plated. Implement measures as necessary since rust occurs even in normal environments.

■ If ambient temperature is 5°C or below, moisture in the circuit could freeze and lead to misoperation, etc.

■ Durability differs based on working conditions and model characteristics.

⚠ CAUTION

■ Do not use in a range where the piston could collide with the stroke end and break.
If a piston collides against the cover at the stroke end and stops due to inertia, use within the range of allowable absorbed energy.

■ Mount the speed control valve on the cylinder.
Use each cylinder within the applicable working piston speed range.

■ Provide intermediate support for a cylinder with long stroke.
If the cylinder has a long stroke, provide an intermediate support to prevent rod damage due to rod drooping, tube sag, vibration, or external loads.

■ Use the product within the maximum stroke according to the mounting type.
Refer to "Pneumatic Cylinders Ⓘ" (catalog No. CB-29SA)".

■ Install a "pressure switch" and "residual pressure exhaust-valve" on the device's compressed air inlet.
- The pressure switch will disable the operation until the set pressure is reached. The residual pressure release valve will release compressed air left in the pneumatic pressure circuit, and will prevent the residual pressure from accidentally operating pneumatic components.

■ Indicate the maintenance conditions in the device's instruction manual.
- The product's performance may drop too low to maintain an appropriate safety level depending on usage conditions, working environment and maintenance status. With correct maintenance, the product functions can be used to the fullest.

■ Use dry compressed air that does not cause moisture inside the piping.
- Moisture will occur if the temperature drops in the pneumatic piping or pneumatic components.
- If the piping volume is larger than the cylinder volume (atmospheric pressure-converted volume), the compressed air in the cylinder will not be completely exhausted when changing with the solenoid valve. This compressed air will condense, form water drops, and cause drainage.
- Operation faults could occur if moisture enters the air flow path of pneumatic components and temporarily blocks passage.
- Moisture could cause rust, making the pneumatic components fail.
- The drainage will flush the lubricant oil leading to a lubrication failure.

■ Ultra dry air is not suitable for pneumatic components. Use equipments specifically designed for ultra dry air.
- Ultra dry compressed air will shorten the life of pneumatic components.
- Use a solenoid valve for DC voltage drive.

■ Use compressed air that does not contain oxidized oil, tar, carbon, etc., from the air compressor.
- If oil oxides, tar, or carbon enter the pneumatic components and solidify, resistance at the sliding section will increase, leading to operation failure.
- If the supplied lubricant mixes with oil oxides, tar, carbon, etc., the sliding section of the pneumatic component could be worn down.

■ Use compressed air that does not contain solid foreign matter.
- Solid foreign matter in compressed air could enter the pneumatic components and cause wear at the sliding section or hydraulic locking. Install a 5 μm or less air filter.
- Regularly perform compressor maintenance and inspection.

■ Make every effort to avoid using multiple synchronized cylinders.
If not synchronized, the piston rod could twist and lead to malfunctions. If synchronized operation is required, be sure to provide a rigid guide device separately.

■ Precautions for using the pressure relief port
Vacuum treatment with the exhaust treatment (P7, P72)
Exhaust treatment is not possible with the vacuum treatment (P71, P73).
An incorrect combination may cause dispersion of particles or malfunctions. Be sure to choose a correct combination.

Installation & adjustment

⚠ WARNING

■ Check load and cylinder installation connection for looseness and other abnormalities before starting operation.

■ Do not use the device until proper operation is confirmed.
After installation, repair, or modification, connect compressed air or electric power and conduct appropriate functional and leakage inspection to confirm that installation is correct.

■ Confirm that there is no machine interference and that the actuation system is normal.

■ Confirm that there is no abnormality in device operation, and gradually raise and set pressure.

■ If operation is started while the exhaust side is at atmospheric pressure, the rod could pop out and cause a dangerous situation. Apply pressure to the cylinder chamber on the exhaust side before starting.

■ When adjusting speed with the speed controller, gradually open the needle from the closed state and adjust.
If speed is adjusted in the opened state, the rod could pop out, creating a hazard.

■ The effect of the cushion with air cushion is adjusted at shipment. However, re-adjust the cushion needle for use in accordance with the size of the load and piston speed.
Gradually open the needle from the closed state and adjust the effect of the cushion. If the cushion needle is loosened too much, the cushion cannot function and may fall off. After making adjustments, tighten the needle nut (hex nut) to fix the unit in place. Use kinetic energy within the allowable value. The product may be damaged if allowable values are exceeded.

■ When the cylinder is in operation, do not enter or put your hand in its operating range.

■ Be sure to tighten very securely in order to prevent the fixed parts or connected sections from loosening.
Always use a secure tightening method when the operating frequency is high or when using the high rotor at places with high levels of vibration.

⚠ CAUTION

■ Open the package in a clean room.
- The products are wrapped in an antistatic sheet before packaged in a box. If you install the product in a clean room, we recommend you to take it out of the box outside the clean room before you bring it in and to open the package in the clean room.

■ When connecting pipes, wrap sealing tape clockwise from the inside position to within 2 threads from the pipe end.
- If sealing tape protrudes from the pipe threads, it could be cut when screwing the bolts in. This could cause the tape to enter the valve, causing failures.

■ Check that the piping connected to the cylinder is not dislocated due to vibration, looseness, or tension.
- Cylinder speed cannot be controlled if pneumatic circuit exhaust piping is dislocated.
- When using the chuck holding mechanism, the chuck may be released, creating a hazardous state.

■ Observe the following precautions when using nylon tubes or urethane tubes for piping.
- When using a standard push-in fitting on the spiral tube, secure the base of the tube with a hose clamp. Otherwise, the tube may rotate causing the holding force to be reduced.

■ Use corrosion-proof materials such as galvanized pipes, stainless steel pipes, nylon pipes or rubber pipes for piping material.

■ When supplying compressed air after connecting pipes, do not suddenly apply high pressure.
- The pipe connection could dislocate, causing the pipe tube to fly out, leading to accidents.
- If compressed air is supplied too slowly, sealing pressure may not be generated by the sealing mechanism in the solenoid valve. This can lead to air leaks.
- The cylinder may operate suddenly.

■ Before supplying compressed air after connecting pipes, check that there are no air leaks at any pipe connections.
- Apply a leakage detection agent to pipe connections with a brush and check that there are no air leaks.

■ Use proper torque to tighten the pipes when connecting them.
- The purpose is to prevent air leakage and damage to bolts.
- First tighten the bolts by hand to ensure that the threads are not damaged, then use a tool.

[Reference value] Refer to the instruction manual.

Port thread	Tightening torque (N·m)
M3	0.3 to 0.6
M5	1 to 1.5
Rc1/8	3 to 5
Rc1/4	6 to 8
Rc3/8	13 to 15
Rc1/2	16 to 18
Rc3/4	19 to 40
Rc1	41 to 70

■ Secure sufficient space around the cylinder for installation, removal, wiring, and piping work.

■ Install a pneumatic filter just before the pneumatic component in the circuit.
- To remove moisture in the pipes, attach an air dryer and filter. Install a filter near the directional control valve (primary side) to remove rust, foreign matter and drainage.

■ If the direction that the load moves in is not parallel to the piston rod shaft center, the piston rod and body (tube) could twist and cause the piston rod to pop out. Twisting can cause seizing, damage, etc. Always align the piston rod shaft center and load movement direction.

■ To avoid damaging the screw at the end of the piston rod and to prevent the bushing from getting worn out or seized, connect the end of the piston rod to the load with a floating joint so that twisting never occurs at any position in the stroke.

■ Take measures so that the load does not fall or drop when the cylinder is removed.

■ Use suspension fittings if the cylinder weighs 15 kg or more.

■ Do not hit the cylinder tube and piston rod sliding section with anything or sandwich objects between them, causing scratches or dents.
The bore size is manufactured with precise tolerance, and operation faults could occur with even the slightest deformation. Scratches or dents on the sliding portion of the piston rod will cause damage of the packing, etc., and may lead to air leakage.

■ Be sure to read the instruction manual carefully.
Read carefully and fully understand contents before starting use. Store so as to allow confirmation at any time.

■ When piping, refer to the instruction manual and make sure not to use the wrong connection port.
- This could cause improper operation.

■ The air cushion is factory adjusted.
- When you change the cushion setting according to the load, adjust it with the cushion needle. Cushioning effect will decrease when the needle is loosened (turned counterclockwise).

■ Provide intermediate support for a cylinder with long stroke. If the cylinder has a long stroke, provide an intermediate support to prevent rod damage due to rod drooping, tube sag, vibration, or external loads.

During use & maintenance

⚠ WARNING

■ Refer to the instruction manual and conduct careful maintenance and inspection.
Incorrect handling could result in device or system damage or operation faults.

■ Component removal and supply/exhaust of compressed air
Before removing the device, take measures to prevent the driven object from falling or running out of control, and shut OFF air and power. Exhaust all compressed air in the system beforehand. Before restarting, confirm that measures are taken to prevent popping out.

■ Smoking with hands smeared with the fluorine grease of cylinders using fluorine grease (such as heat resistance, low-speed, low friction, P7) could generate harmful gases and cause physical harm.

⚠ CAUTION

■ Conduct daily inspections and regular inspections to ensure that maintenance control is done correctly.
● If maintenance is not correctly managed, the product's functions could deteriorate markedly and lead to a shortened service life, faults and accidents.

1. Pressure control of supplied compressed air
● Is the set pressure provided? Does the pressure gauge indicate the set pressure while the equipment is operating?

2. Pneumatic filter control
● Is the drain correctly discharged?
Is the bowl or element clean enough to use?

3. Control of compressed air leaks from piping connections
● Is the state of the connection, especially at movable sections, normal?

4. Control of solenoid valve's operation
● Are operations delayed? Is exhaust normal?

5. Control of pneumatic actuator operation
● Do they work smoothly? Do they stop properly when they reach the ends? Do the joints to the load work properly?

■ Do not use if air leakage rate increases or the device does not operate correctly.
● After repair or modification, connect compressed air and electricity, and conduct functional and leakage inspection to confirm that operation is normal.

■ When restarting after a long period of inactivity, make sure that it works properly before you restart it for operation.

■ Take measures so that the load does not fall or drop when the cylinder is removed.

SCPD3

Pencil shaped cylinder

Space saving structure

Overview

The lightest miniature series with the smallest bore size (ø6 to ø 16) in the general purpose cylinders.

Features

The exterior color is unified into silver white to enhance its bright image. The T switch helps you save space compared to the older versions. The mounting dimensions and the thread size of the rod tip are unchanged to make it easier to switch from the older models.

Note: Currently the cover is black, but it will be changed to silver.

CONTENTS

Series variation

Variation and option selection table 8

● **Double acting/single rod (SCPD3) 10**

● **Double acting/fine speed (SCPD3-F) 16**

⚠ Safety precautions 20

SCPD3
SCM
SSD2
MDC2
SMG
LCM
LCR
LCG
LCX
STM
STG
STR2
MRL2
GRC
Cylinder switch
MN3E MN4E
4GA/B
M4GA/B
MN4GA/B
F.R (module unit)
Clean F.R
Precision R
Press gauge Diff. press gauge
Electro-pneumatic R
Speed controller
Auxiliary valve
Fitting/ tube
Clean air unit
Pressure sensor
Flow rate sensor
Valve for air blow
Ending

Variation and option selection table

◎ : Option variation (check category 2)
○ : C5 compatible (check category 3)
△ : Available depending on conditions (Estimation)
: Not available

			Clean room specifications			
			Exhaust treatment	Vacuum treatment	Exhaust treatment	Vacuum treatment
		Code	P7	P71	P5	P51
Variation	Double acting	Blank	○	○	○	○
	With cylinder switch	L	○	○	○	○
	Fine speed	F	○	○		
	Double acting double rod	D	○	○	○	○
	Heat resistant (120°C)	T				
	Low speed	O	○	○		
	High load	K	△	△	△	△
	Non-rotation	M				
	With speed controller	Z				
	With valve	V				
	Single acting push	SCPS3				
	Single acting pull	SCPH3				
Cushion	Rubber-air cushioned	C	○	○	○	○
Option	Rod nut material stainless steel	M	○	○	○	○
	Axial port position	O	○	○	○	○
	Customized piston rod end form	N**	○	○	○	○

MEMO

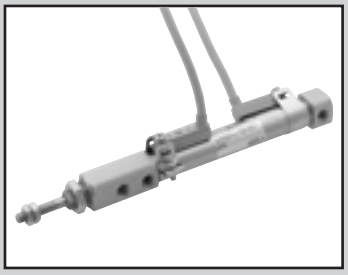

Pencil shaped cylinder
Double acting/single rod

SCPD3 Series (made to order)

● Bore size: ø6/ø10/ø16

JIS symbol

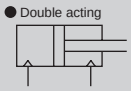

RoHS

Structure and material restriction

	Structure	Material restriction			Model No.
P7 Series	Exhaust treatment				P7
	Vacuum treatment				P71
P5 Series	Exhaust treatment	Copper-based materials prohibited	Silicon-based materials prohibited	Halogen-based materials prohibited (fluorine, chlorine, bromine)	P5
	Vacuum treatment	Copper-based materials prohibited	Silicon-based materials prohibited	Halogen-based materials prohibited (fluorine, chlorine, bromine)	P51

Specifications

Descriptions	SCPD3-P7*/P5* SCPD3-L-P7*/P5*		
Bore size mm	ø6	ø10	ø16
Actuation	Double acting		
Working fluid	Compressed air		
Max. working pressure MPa	1.0		
Min. working pressure MPa	0.15	0.1	
Proof pressure MPa	1.6		
Ambient temperature °C	-10 to 60 (no freezing)		
Port size	M5		
Port size (relief port)	M5		
Stroke tolerance mm	$^{+1.0}_{0}$		
Working piston speed mm/s	50 to 500		
Cushion	Rubber cushion		
Lubrication	Not available		
Allowable energy absorption J	0.012	0.041	0.162

Stroke length

Bore size (mm)	Standard stroke length (mm)	Max. stroke length (mm)	Min. stroke length (mm)*
ø6	15/30/ 45/60	100	5
ø10		200	
ø16		260	

* For types with switch, minimum stroke length varies depending on installation method. Refer to the following table.

Min. stroke length with switch

	1		2	
Sketch	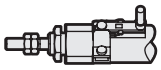 Rod end installation	Head end installation	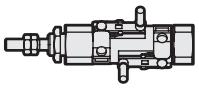 Different surface installation	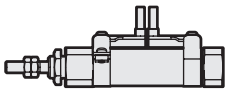 Same surface installation
Min. stroke length	5 mm		10 mm	28 mm

	3	
Sketch	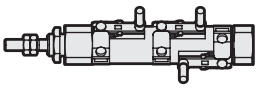 Different surface installation	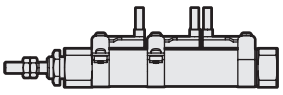 Same surface installation
Min. stroke length	38 mm	54 mm

Switch specifications

Descriptions	Proximity 2-wire		Proximity 3-wire	
	T2H/T2V	T2WH/T2WV	T3H/T3V	T3WH/T3WV
Applications	Programmable controller		Programmable controller, relay	
Output method	-		NPN output	
Power supply voltage	-		10 to 28 VDC	
Load voltage	10 to 30 VDC	24 VDC ±10%	30 VDC or less	
Load current	5 to 20 mA (*2)		100 mA or less	50 mA or less
Indicator lamp	LED (lit when ON)	Red/green LED (lit when ON)	LED (lit when ON)	Red/green LED (lit when ON)
Leakage current	1 mA or less		10 μA or less	
Weight g	1 m: 18 3 m: 49 5 m: 80		1 m: 18 3 m: 49 5 m: 80	

Descriptions	Reed 2-wire			
	T0H/T0V		T5H/T5V	
Applications	Programmable controller, relay		Programmable controller, relay IC circuit (without indicator lamp), serial connection	
Load voltage	12/24 VDC	110 VAC	5/12/24 VDC	110 VAC
Load current	5 to 50 mA	7 to 20 mA	50 mA or less	20 mA or less
Indicator lamp	LED (lit when ON)		Without indicator lamp	
Leakage current	0 mA		0 mA	
Weight g	1 m: 18 3 m: 49 5 m: 80		1 m: 18 3 m: 49 5 m: 80	

*1: Refer to page 309 for detailed switch specifications, dimensions, etc.
*2: Max. load current: 20mA at 25°C.The current is lower than 25 mA if the operating ambient temperature around the switch is higher than 20°C.
(At 60°C, it will be 5 to 10mA.)

Cylinder weight

(Unit: g)

Descriptions / Bore size (mm)	Mounting bracket weight		Product weight for 0 mm stroke length	Additional weight per 10 mm stroke length	Switch weight (per switch)	Mounting bracket weight
	Foot (LS)	Flange (FA)				
ø6	6	4	23	1	Refer to weight information provided in the switch specifications.	2
ø10	6	4	34	2		
ø16	15	12	69	3		

Example: Product weight of SCPD3-L-LS-10-30-T0H-D-P7

- Mounting bracket weight (Foot) …… 6 g
- Product weight for 0 mm stroke length ……34 g
- Additional weight for stroke length 30 mm ……2 × 30/10 = 6 g
- Weight of 2 switches …… 2 × (18 + 2) = 40 g
- Product weight…… 6 + 34 + 6 + 40 = 86 g

Theoretical thrust table

(Unit: N)

Bore size (mm)	Operating direction	Working pressure MPa										
		0.1	0.15	0.2	0.3	0.4	0.5	0.6	0.7	0.8	0.9	1.0
ø6	Push	-	4.24	5.65	8.48	11.3	14.1	17.0	19.8	22.6	25.4	28.3
	Pull	-	3.18	4.24	6.36	8.48	10.6	12.7	14.8	17.0	19.1	21.2
ø10	Push	7.85	11.8	15.7	23.6	31.4	39.3	47.1	55.0	62.8	70.7	78.5
	Pull	6.60	9.90	13.2	19.8	26.4	33.0	39.6	46.2	52.8	59.4	66.0
ø16	Push	20.1	30.2	40.2	60.3	80.4	1.01×10^2	1.21×10^2	1.41×10^2	1.61×10^2	1.81×10^2	2.01×10^2
	Pull	18.1	27.2	36.3	54.4	72.6	90.7	1.09×10^2	1.27×10^2	1.45×10^2	1.63×10^2	1.81×10^2

How to order

Without switch (No magnet for switch)

SCPD3 — 00 - 10 - 15 - 0 — P7

With switch (Magnet for switch incorporated)

SCPD3-L — 00 - 10 - 15 - 0 - T2V - R - P7

Model No.

Ⓐ Mounting *1

Ⓑ Bore size

Ⓒ Stroke length

Ⓓ Head end port direction

Ⓔ Switch model No. *3

* indicates lead wire length.

Ⓕ Switch quantity

Ⓖ Clean room specifications

Code	Content
Ⓐ Mounting	
00	Basic
LS	Axial foot (single) rod end
FA	Rod end flange

Ⓑ Bore size (mm)	
6	ø6
10	ø10
16	ø16

Ⓒ Stroke length (mm)

Bore size	Stroke length *2	Custom stroke length
ø6	**5 to 100**	By 1 mm increments
ø10	**5 to 200**	
ø16	**5 to 260**	

Ⓓ Head end port direction	
Blank	Vertical
0	Shaft direction

Ⓔ Switch model No.

Lead wire straight	Lead wire L-shaped	Contact	Voltage AC	Voltage DC	Indicator	Lead wire
T0H*	**T0V***	Reed	●	●	1-color display	2 wires
T5H*	**T5V***		●	●	Without indicator lamp	
T2H*	**T2V***	Proximity		●	1-color display	2 wires
T3H*	**T3V***			●		3 wires
T2WH*	**T2WV***			●	2-color display	2 wires
T3WH*	**T3WV***			●		3 wires

*** Lead wire length**	
Blank	1 m (standard)
3	3 m (optional)
5	5 m (optional)

Ⓕ Switch quantity	
R	1 (on rod end)
H	1 (on head end)
D	2
T	3

Ⓖ Clean room specifications

	Structure	Material restriction
P7	Exhaust treatment	-
P71	Vacuum treatment	-
P5	Exhaust treatment	Copper-based/silicon-based/halogen-based materials (fluorine, chlorine, bromine) are prohibited
P51	Vacuum treatment	Copper-based/silicon-based/halogen-based materials (fluorine, chlorine, bromine) are prohibited

Precautions for model No. selection

*1: Mounting brackets are shipped with the product.
*2: Refer to page 10 for minimum stroke lengths of the types with switch incorporated.
*3: No magnet is installed in those without switch.

[Example of model No.]

SCPD3-L-LS-10-15-0-T2V-R-P7

Model: Pencil shaped cylinder/double acting/single rod

Ⓐ Mounting : Axial foot (single) rod end
Ⓑ Bore size : ø10 mm
Ⓒ Stroke length : 15 mm
Ⓓ Head end port direction : Shaft direction
Ⓔ Switch model No. : Proximity switch T2V
Ⓕ Switch quantity : 1 (on rod end)
Ⓖ Clean room specifications : Exhaust treatment

Head cover port direction

For 00, LS and FA mounting, the head cover port direction can be selected from two options: vertical to the axis direction and horizontal to the axis direction.

Dimensions

● SCPD3-L-P7*/P5* basic (00)

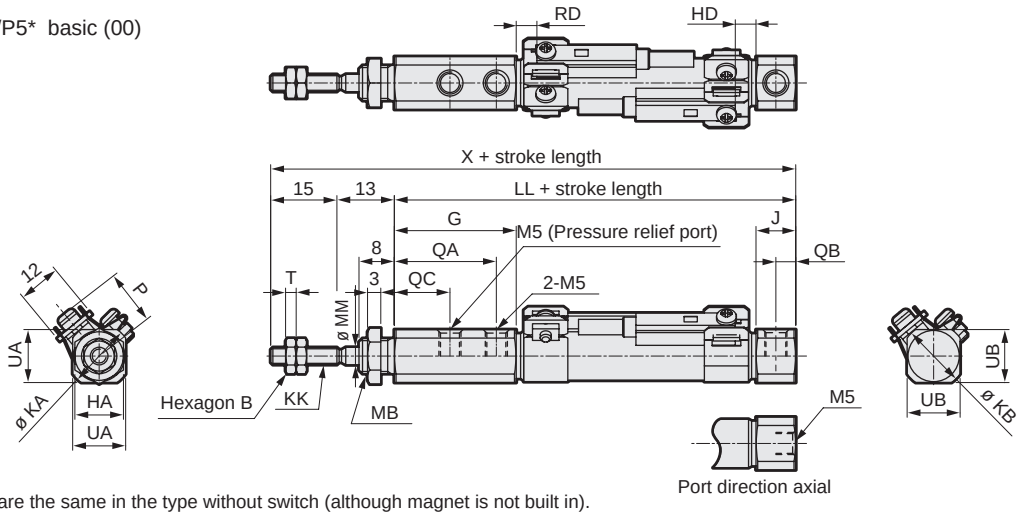

● The dimensions are the same in the type without switch (although magnet is not built in).
● *1: As the thread depth of ø6/ø10 port is 3.8 mm, use a fitting with the thread length of 3.8 mm or less if necessary.

Code	Basic (00) basic dimensions																
Bore size (mm)	B	G	HA	J	KA	KB	KK	LL	MB	MM	QA	QB	QC	T	UA	UB	X
ø6	5.5	27	8	8	14.3	13.5(9)	M3	57	M6	3	23	4	12.5	1.8	12	11(8)	85
ø10	7	27.5	11	9	14.5	14.5	M4	61	M8 × 1.0	4	23	4.5	12.5	2.4	12	12	89
ø16	8	28	14	9	21.5	21.5	M5	61	M10 × 1.0	5	23.5	4.5	13	3.2	18	18	89

Code	With switch				
Bore size (mm)	T0, T5, T2, T3		T2W, T3W		P
	RD	HD	RD	HD	
ø6	2	2	4	3.5	11.5
ø10	3.5	2.5	5.5	4	13.5
ø16	2	3.5	3.5	5	17

Those shown in ( ) are for the type with axial port direction.

● SCPD3-L-P7*/P5* Single sided axial foot (LS)

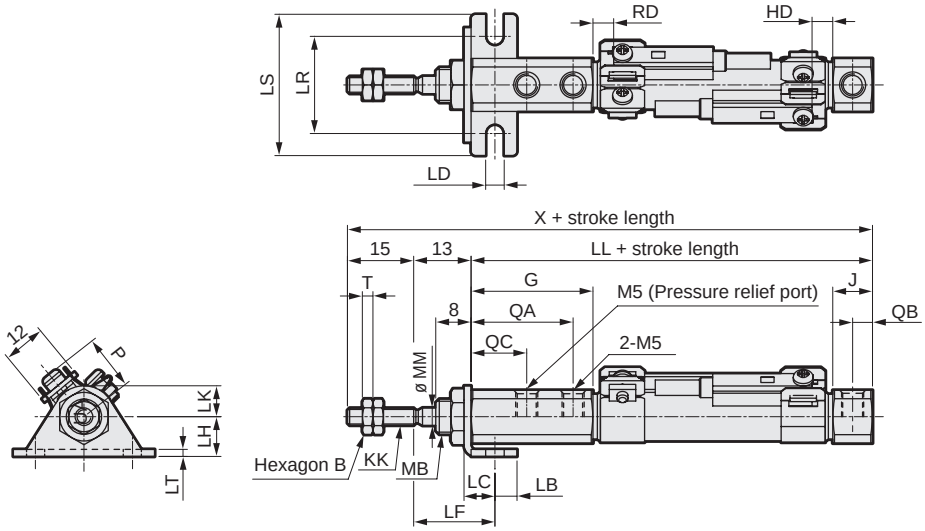

● The dimensions are the same in the type without switch (although magnet is not built in).
● *1: As the thread depth of ø6/ø10 port is 3.8 mm, use a fitting with the thread length of 3.8 mm or less if necessary.

Code	Axial foot (LS) basic dimensions											Installation dimensions					
Bore size (mm)	B	G	J	KK	MB	MM	QA	QB	QC	T	X	LB	LC	LD	LF	LL	LH
ø6	5.5	27	8	M3	M6	3	23	4	12.5	1.8	85	5	7	4.2	18.4	57	9
ø10	7	27.5	9	M4	M8 × 1.0	4	23	4.5	12.5	2.4	89	5	7	4.2	18.4	61	9
ø16	8	28	9	M5	M10 × 1.0	5	23.5	4.5	13	3.2	89	6	9	5.2	19.7	61	14

Code					With switch				
Bore size (mm)	LK	LR	LS	LT	T0, T5, T2, T3		T2W, T3W		P
					RD	HD	RD	HD	
ø6	7	22	32	1.6	2	2	4	3.5	11.5
ø10	7	22	32	1.6	3.5	2.5	5.5	4	13.5
ø16	10	29	42	2.3	2	3.5	3.5	5	17

Dimensions

● SCPD3-L-P7*/P5* rod end flange (FA)

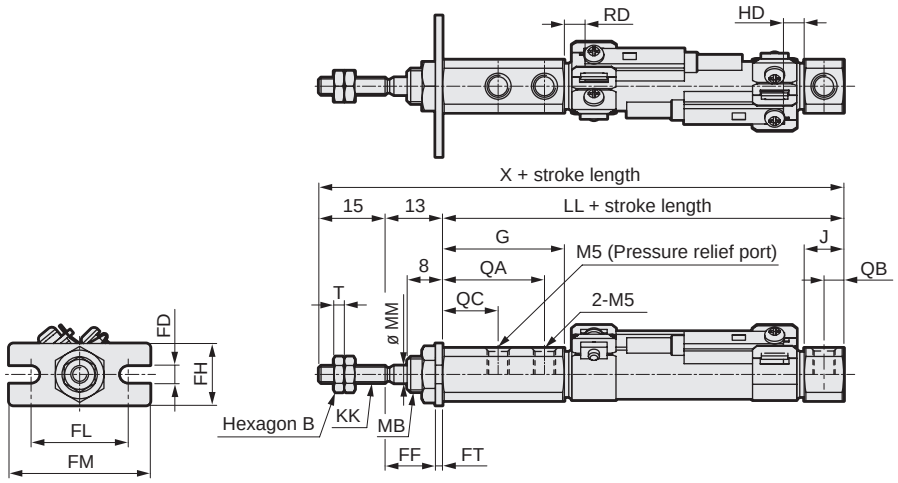

● The dimensions are the same in the type without switch (although magnet is not built in).
● *1: As the thread depth of ø6/ø10 port is 3.8 mm, use a fitting with the thread length of 3.8 mm or less if necessary.

Code	Rod end flange (FA) basic dimensions												Installation dimensions				
Bore size (mm)	B	G	J	KK	LL	MB	MM	QA	QB	QC	T	X	FD	FF	FH	FL	FM
ø6	5.5	27	8	M3	57	M6	3	23	4	12.5	1.8	85	4.2	11.4	14	22	32
ø10	7	27.5	9	M4	61	M8 × 1.0	4	23	4.5	12.5	2.4	89	4.2	11.4	14	22	32
ø16	8	28	9	M5	61	M10 × 1.0	5	23.5	4.5	13	3.2	89	5.2	10.7	20	29	42

Code		With switch				
Bore size (mm)	FT	T0, T5, T2, T3		T2W, T3W		P
		RD	HD	RD	HD	
ø6	1.6	2	2	4	3.5	11.5
ø10	1.6	3.5	2.5	5.5	4	13.5
ø16	2.3	2	3.5	3.5	5	17

MEMO

Pencil shaped cylinder
Double acting/fine speed

SCPD3-F Series (made to order)

● Bore size: ø6/ø10/ø16

JIS symbol

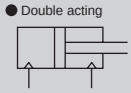

RoHS

Structure and material restriction

	Structure	Model No.
P7 Series	Exhaust treatment	P7
	Vacuum treatment	P71

Specifications

Descriptions	SCPD3-F-P7*/SCPD3-LF-P7* (with switch)		
Bore size mm	ø6	ø10	ø16
Actuation	Double acting		
Working fluid	Compressed air		
Max. working pressure MPa	1.0		
Min. working pressure MPa	0.15	0.1	
Proof pressure MPa	1.6		
Ambient temperature °C	5 to 60		
Port size	M5		
Stroke tolerance mm	$^{+1.0}_{0}$		
Working piston speed mm/s	1 to 200		
Cushion	Rubber cushion		
Lubrication	Not available		
Allowable energy absorption J	0.012	0.041	0.162

Stroke length

Bore size (mm)	Standard stroke length (mm)	Max. stroke length (mm)	Min. stroke length (mm) *
ø6	15/30/ 45/60	100	5
ø10		200	
ø16		260	

* For types with switch, minimum stroke length varies depending on installation method. Refer to the following table.

Min. stroke length with switch

	1		2	
Sketch	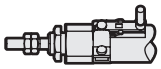 Rod end installation	Head end installation	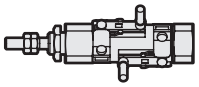 Different surface installation	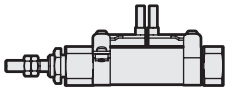 Same surface installation
Min. stroke length	5 mm		10 mm	28 mm

	3	
Sketch	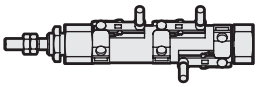 Different surface installation	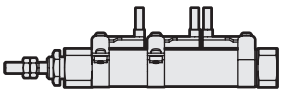 Same surface installation
Min. stroke length	38 mm	54 mm

Switch specifications

Descriptions	Proximity 2-wire		Proximity 3-wire	
	T2H/T2V	T2WH/T2WV	T3H/T3V	T3WH/T3WV
Applications	Programmable controller		Programmable controller, relay	
Output method	-		NPN output	
Power supply voltage	-		10 to 28 VDC	
Load voltage	10 to 30 VDC	24 VDC ±10%	30 VDC or less	
Load current	5 to 20 mA		100 mA or less	50 mA or less
Indicator lamp	LED (lit when ON)	Red/green LED (lit when ON)	LED (lit when ON)	Red/green LED (lit when ON)
Leakage current	1 mA or less		10 μA or less	
Weight g	1 m: 18 3 m: 49 5 m: 80		1 m: 18 3 m: 49 5 m: 80	

Descriptions	Reed 2-wire			
	T0H/T0V		T5H/T5V	
Applications	Programmable controller, relay		Programmable controller, relay IC circuit (without indicator lamp), serial connection	
Load voltage	12/24 VDC	110 VAC	5/12/24 VDC	110 VAC
Load current	5 to 50 mA	7 to 20 mA	50 mA or less	20 mA or less
Indicator lamp	LED (lit when ON)		Without indicator lamp	
Leakage current	0 mA		0 mA	
Weight g	1 m: 18 3 m: 49 5 m: 80		1 m: 18 3 m: 49 5 m: 80	

*1: Refer to page 309 for detailed switch specifications, dimensions, etc.
*2: Max. load current: 20mA at 25°C. The current is lower than 25 mA if the operating ambient temperature around the switch is higher than 20˚C. (60 to 5 mA at 10°C)

Cylinder weight

(Unit: g)

Type	Descriptions / Bore size (mm)	Mounting bracket weight: Foot LS	Mounting bracket weight: Flange FA	Product weight for 0 mm stroke length	Additional weight per 10 mm stroke length	Switch weight (per switch)	Mounting bracket weight
SCPD3-F	ø6	6	4	23	1	Refer to weight information provided in the switch specifications.	2
	ø10	6	4	34	2		
	ø16	15	12	69	3		

Example: Product weight of SCPD3-LF-LS-10-30-T0H-D-P7
- Mounting bracket weight (Foot) …… 6 g
- Product weight for 0 mm stroke length ……34 g
- Additional weight for stroke length 30 mm ……2 × 30/10 = 6 g
- Weight of 2 switches …… 2 × (18 + 2) = 40 g
- Product weight…… 6 + 34 + 6 + 40 = 86 g

Theoretical thrust table

(Unit: N)

Bore size (mm)	Operating direction	Working pressure MPa 0.1	0.15	0.2	0.3	0.4	0.5	0.6	0.7	0.8	0.9	1.0
ø6	Push	-	4.24	5.65	8.48	11.3	14.1	17.0	19.8	22.6	25.4	28.3
	Pull	-	3.18	4.24	6.36	8.48	10.6	12.7	14.8	17.0	19.1	21.2
ø10	Push	7.85	11.8	15.7	23.6	31.4	39.3	47.1	55.0	62.8	70.7	78.5
	Pull	6.60	9.90	13.2	19.8	26.4	33.0	39.6	46.2	52.8	59.4	66.0
ø16	Push	20.1	30.2	40.2	60.3	80.4	1.01×10^2	1.21×10^2	1.41×10^2	1.61×10^2	1.81×10^2	2.01×10^2
	Pull	18.1	27.2	36.3	54.4	72.6	90.7	1.09×10^2	1.27×10^2	1.45×10^2	1.63×10^2	1.81×10^2

How to order

Without switch (No magnet for switch)

SCPD3-F — LS - 10 - 15 ———— P7

With switch (Magnet for switch incorporated)

SCPD3-LF — LS - 10 - 15 - T2V - R - P7

Model No.

Ⓐ Mounting

Ⓑ Bore size

Ⓒ Stroke length

Ⓓ Switch model No.
*3
indicates lead wire length.

Ⓔ Switch quantity

Ⓕ Clean room specifications

Code	Content
Ⓐ Mounting	
00	Basic
LS	Axial foot (single) rod end
FA	Rod end flange

Ⓑ Bore size (mm)	
6	ø6
10	ø10
16	ø16

Ⓒ Stroke length (mm)

Bore size	Stroke length *2	Custom stroke length
ø6	**5 to 100**	By 1 mm increments
ø10	**5 to 200**	
ø16	**5 to 260**	

Ⓓ Switch model No.

Lead wire straight	Lead wire L-shaped	Contact	Voltage AC	Voltage DC	Indicator	Lead wire
T0H*	**T0V***	Reed	●	●	1-color display	2 wires
T5H*	**T5V***		●	●	Without indicator lamp	
T2H*	**T2V***	Proximity		●	1-color display	2 wires
T3H*	**T3V***			●		3 wires
T2WH*	**T2WV***			●	2-color display	2 wires
T3WH*	**T3WV***			●		3 wires

*** Lead wire length**	
Blank	1 m (standard)
3	3 m (optional)
5	5 m (optional)

Ⓔ Switch quantity	
R	1 (on rod end)
H	1 (on head end)
D	2
T	3

Ⓕ Clean room specifications	
	Structure
P7	Exhaust treatment
P71	Vacuum treatment

Precautions for model No. selection

*1: Mounting brackets are shipped with the product.
*2: Refer to page 16 for minimum stroke lengths of the types with switch incorporated.
*3: No magnet is installed in those without switch.

[Example of model No.]

SCPD3-F-LS-10-15-T2V-R-P7

Model: Pencil shaped cylinder/double acting/single rod

Ⓐ Mounting : Axial foot (single) rod end
Ⓑ Bore size : ø10 mm
Ⓒ Stroke length : 15 mm
Ⓓ Switch model No. : T2V proximity switch with lead wire of 1 m
Ⓔ Switch quantity : 1 (on rod end)
Ⓕ Clean room specifications : Exhaust treatment

Dimensions

Same as SCPD3 Series (double acting/single rod). Refer to pages 13 and 14.

MEMO

Safety Precautions

Always read this section before use.
Refer to page 2 for general information of the cylinder, and to page 320 for general information of the cylinder switch.

Pencil shaped cylinder SCPD3 Series

Design & selection

1. Fine speed SCPD3-F

CAUTION

■ Use the product with no lubrication.
- Application of lubrication may cause changes in characteristics.

■ Assemble the speed controller near the cylinder.
- When installed at a distant place from the cylinder, the adjustment becomes unstable.
- For the speed control valve, SC-M3/M5-F, SC3W and SCD-M3/M5-F Series are recommended.

■ At the higher air pressure and the lower load factor, the speed generally becomes more stable.
- The load factor should be 50% or less.

■ Stable speed control is achieved with a meter-out circuit.
- When fine speed activation is performed with operating direction PUSH for the sin gle rod cylinder, the popping out phenomenon occurs when operation starts if the load resistance is low. As a countermeasure, use a circuit of ⓑ, ⓒ or ⓓ. Note that circuit ⓓ is the most stable.

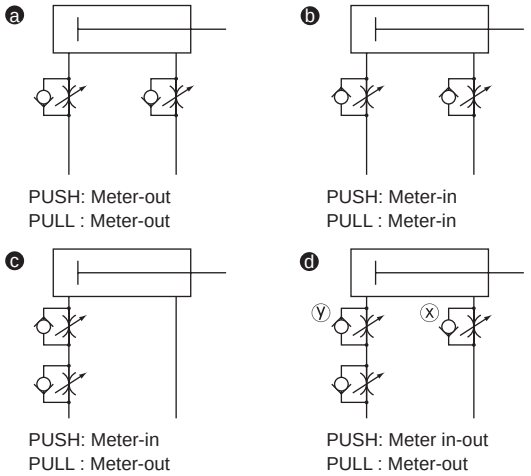

Speed adjustment method for PUSH operation of ⓓ circuit:
1. Set the speed with the speed controller x.
2. Restrict the speed with the speed controller y until there is no popping out.
3. Check the speed again.

Note 1: When comparing ⓑ, ⓒ, and ⓓ, operation is the most stable with ⓓ circuit.

(Note 2) For vertical mounting, combine the cylinder with a meter-out circuit, as it will fall under its own weight when a meter-in circuit is used.

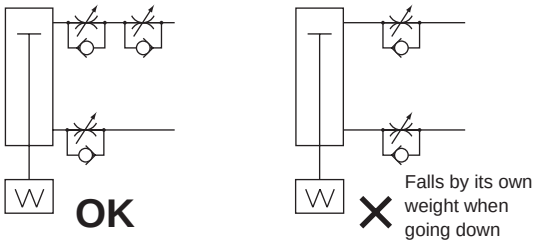

(Note 3) Use the circuit as shown in the figure below for the serial connection of the speed control valves.

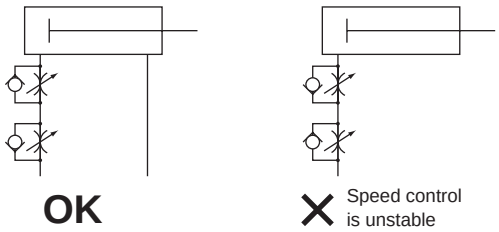

(Guidelines for pop-out generation)

Popping out occurs in the following cases.
• Thrust > Resistance

* Resistance: a force produced by a residual pressure on the outlet side (for fine speed, Inlet pressure = Residual pressure) + { When using horizontally : frictional force caused by load / When using vertically : load self-weight

■ Do not apply a lateral load to the cylinder.
- With a lateral load, operation will become unstable.

■ Avoid use in places subject to vibrations.
- The product will be adversely affected by vibration and operation will become unstable.

Installation & adjustment

1. Common

⚠ CAUTION

■ Mount T switch as shown in the following figure.
When using the standard T switch (SW-T*)

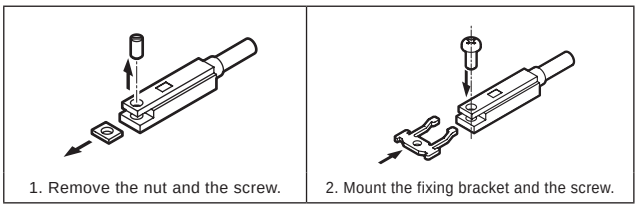
1. Remove the nut and the screw.
2. Mount the fixing bracket and the screw.

1. Insert the square hole of the band into the fixing bracket, and mount it on the cylinder.

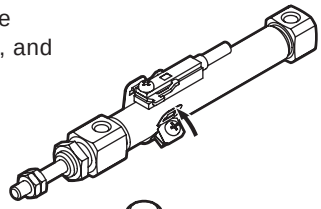

If the mounting is difficult, follow the steps below.
(1) Loosen the switch-side screw.
(2) Insert the square hole of the band into the fixing bracket.

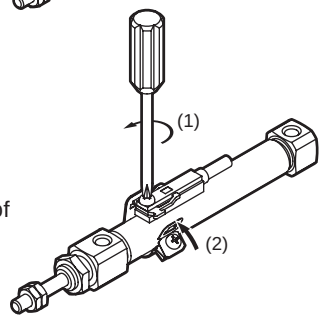

2. Tighten the switch-side screw.
Tightening torque: 0.1 to 0.15 N·m

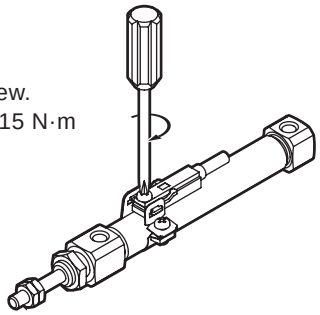

3. Tighten the band-side screw.
Tightening torque: 0.1 to 0.15 N·m

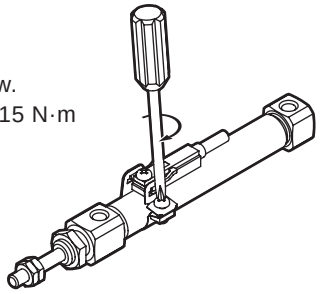

4. When adjusting the switch mounting position
Loosen the switch-side screw to adjust the position, an d fix it by tightening the screw at the best position.
Tightening torque: 0.1 to 0.15 N·m

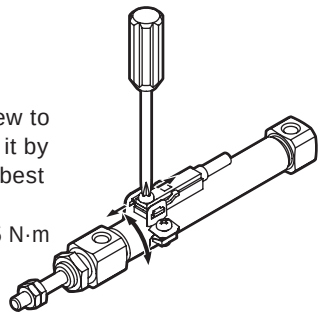

■ The cylinder switch could malfunction if cylinders with switch are installed adjacently in parallel. Check that the distances are provided between cylinders according to Table 1 below.

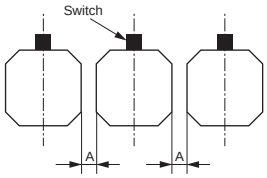

Table 1: Dimension A (mm)

Port size \ Switch	T0/T5 reed	T2/T3 proximity
ø6	≥ 0 (*1)	≥ 3
ø10	≥ 0	≥ 3
ø16	≥ 0	≥ 3

*1 Keep separated by 3 mm or more for SCPS-6 axial port direction.

■ The cylinder switch could malfunction if cylinders with switch are installed adjacently in other ways. Check that the distances are provided between cylinders according to Table 2 below.

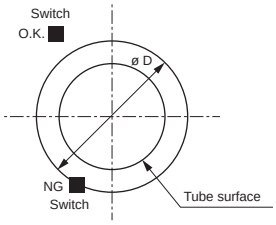

Table 2: Dimension D (mm)

Port size \ Switch	T0/T5 reed	T2/T3 proximity
ø6	ø16.5 or more	ø 22.5 or more
ø10	ø 21 or more	ø 26.5 or more
ø16	ø 34 or more	ø 35 or more

■ Avoid strained piping such that a lateral force is applied to the cylinder tube.
The cylinder tube is inclined, and this could cause malfunctions.

■ When piping, be sure to use a hose nipple (with fixed throttle) or a speed controller.
Refer to page 949 for hose nipple.

■ Do not turn the cover.
● If the cover is turned when mounting the cylinder or screwing the pipe fitting into the port, damage of the cover connection could occur.

■ When fixing a workpiece onto the end of the piston rod, tighten so that torque is not applied to the cylinder body.

■ When tightening the hexagon nut, use the torque within the tightening torque range as below.
ø6: 1.46 N·m ±10%
ø10: 4.09 N·m ±10%
ø16: 8.78 N·m ±10%

During use & maintenance

1. Common

⚠ CAUTION

■ Because this cylinder is a non-disassemble type, do not apply excessive force to the end cover or tube.

SCM

Round shaped cylinder

Standard

ø20/ø25/ø32/ø40/ø50/ø63/ø80/ø100

Overview

Medium bore size (ø20 to ø100) series of general purpose cylinder that has a slim body and a wide variety of bore sizes and variations. The series is the smallest in the standard cylinders.

Features

Slim body
Simple and functional design

Easy cushion needle adjustment
A knob has been attached to the cushion needle for easy adjustment.

Easy mounting
Better workability has been enabled by mounting with 4 bolts. Also mountable with a general tool.

Selectable switch mounting

Band method

- **Switch mounting position is clear at a glance**
  Thanks to the marking on the switch rail for mounting it at the max. sensitivity position, the time for position setting of switch during maintenance can be reduced significantly. (Limited to detection of stroke end. Excluding 2-color display and strong magnetic field proof)

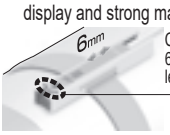

Capable of fine adjustment up to 6 mm in the direction of stroke length for the band & rail.
Marking of switch mounting position

- **Capable of free rotation of switch**
  Just by loosening the fixing screw, the switch rail can be rotated freely to the circumference direction without changing the position of the band fixing section. Thus, mounting switches and adjusting positions on site will be easy.
- **Fallout prevention of fixing screw**
  The rubber for preventing slip is attached inside the band. The screws will not fall out even if loosened.

Fixed rail

- **Rail with integrated switch**
  A miniature switch has been encased in the switch rail. A lead wire can also be stored in the same rail. Moving and mounting the cylinder switch can be completed by simply adjusting the screw.

CONTENTS

Variation and option selection table	24
● **Double acting/single rod (SCM)**	**26**
● **Double acting/position locking (SCM-Q)**	**34**
⚠ Safety precautions	44

SCPD3
SCM
SSD2
MDC2
SMG
LCM
LCR
LCG
LCX
STM
STG
STR2
MRL2
GRC
Cylinder switch
MN3E MN4E
4GA/B
M4GA/B
MN4GA/B
F.R (module unit)
Clean F.R
Precision R
Press gauge Diff. press gauge
Electro-pneumatic R
Speed controller
Auxiliary valve
Fitting/ tube
Clean air unit
Pressure sensor
Flow rate sensor
Valve for air blow
Ending

Variation and option selection table

◎ : Option variation (check category 2)
○ : C5 compatible (check category 3)
△ : Available depending on conditions (estimation)
: Not available

			Clean room specifications			
			Exhaust treatment	Vacuum treatment	Exhaust treatment	Vacuum treatment
		Code	P7	P71	P5	P51
Variation	Double acting/single rod	Blank	◎	◎	○	○
	Position locking	Q	◎	◎	○	○
	With air cushion	B,R,H	○	○	○	○
	Heat resistant (120°C)	T				
	Low speed	O	◎	◎		
	Double acting double rod	D	○	○	○	○
	Back to back	B	○	○	○	○
	Two stage	W	△	△	△	△
	Tandem	W4	△	△	△	△
	Single acting push	X				
	Single acting pull	Y				
	Stroke adjusting Push	P				
	Stroke adjusting Pull	R				
	Non-rotation	M				
	Low friction	U				
Port thread	NPT *1	N	○	○	○	○
	G *1	G	○	○	○	○
Option	on rod material (stainless steel)*2	M	○	○	○	○
	Customized piston rod end form	N**	○	○	○	○
	Switch rail attached at shipment	Q	◎	◎	○	○
	Neoprene with bellows	J				
	Silicone rubber with bellows	L				

*1: ø20/ø25 are not available for the type with air cushion.
*2: Piston rod is made of stainless steel as standard. The tip nut will be stainless steel.

MEMO

Round shaped cylinder Double acting/single rod

SCM Series

- Bore size: ø20/ø25/ø32/ø40
  ø50/ø63/ø80/ø100

JIS symbol

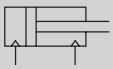

RoHS CAD

Structure and material restriction

	Structure	Material restriction	Model No.		Structure	Material restriction			Model No.
P7 Series	Exhaust treatment	-	P7	P5 Series (custom order product)	Exhaust treatment	Copper-based materials prohibited	Silicon-based materials prohibited	Halogen-based materials prohibited (fluorine, chlorine, bromine)	P5
	Vacuum treatment	-	P71		Vacuum treatment	Copper-based materials prohibited	Silicon-based materials prohibited	Halogen-based materials prohibited (fluorine, chlorine, bromine)	P51

Specifications

Descriptions		SCM-P7*/P5*							
Bore size mm		ø20	ø25	ø32	ø40	ø50	ø63	ø80	ø100
Actuation		Double acting							
Working fluid		Compressed air							
Max. working pressure MPa		1.0							
Min. working pressure MPa		0.15				0.1			
Proof pressure MPa		1.6							
Ambient temperature °C		-10 to 60(no freezing)							
Port size	With rubber cushion	Rc1/8				Rc1/4		Rc3/8	Rc1/2
	With air cushion	M5		Rc1/8		Rc1/4		Rc3/8	Rc1/2
Port size (relief port)		M5							
Stroke tolerance mm	With rubber cushion	$^{+1.4}_{0}$ (to 1000)			$^{+1.4}_{0}$ (to 1500)	$^{+2.3}_{0}$ (to 1000), $^{+2.7}_{0}$ (to 1500)			
	With air cushion	$^{+1.4}_{0}$ (to 1000)			$^{+1.4}_{0}$ (to 1500)	$^{+1.4}_{0}$ (to 1000), $^{+1.8}_{0}$ (to 1500)			
Working piston speed mm/s		30 to 1000 (Operate within the allowable absorbed energy.)							
Cushion		Either rubber cushion or air cushion can be selected.							
Effective air cushion length mm		8.1	8.1	8.6	8.6	13.4	13.4	15.4	15.4
Lubrication		Not available							
Allowable energy absorption J	With rubber cushion	0.1	0.2	0.5	0.9	1.6	1.6	3.3	5.8
	With air cushion	0.8	1.2	2.5	3.7	8.0	14.4	25.4	45.6
	No cushion	–	–	–	–	0.057	0.057	0.112	0.153

*1: "No cushion" in the allowable absorption energy indicates the allowable absorption energy of the side that is not indicated ("R" → head side, "H" → rod side) when the one-side air cushion is selected.
*2: Without cushions, large energy generated by external loads cannot be absorbed. Please provide an external shock absorber.

Stroke length

Bore size(mm)	Standard stroke length(mm)	Max. stroke length(mm)	Min. stroke length(mm)	Bore size(mm)	Standard stroke length(mm)	Max. stroke length(mm)	Min. stroke length(mm)
ø20	25, 50, 75, 100, 125, 150, 200, 250, 300	1000	10	ø50	25, 50, 75, 100, 125, 150, 200, 250, 300	1500	10
ø25				ø63			
ø32				ø80			
ø40		1500		ø100			

Number of installed switches and the min. stroke length (mm)

● Switch mounting: Rail

Switch quantity / Bore size (mm)	1				2				3				4				5			
	Proximity			Reed	Proximity			Reed	Proximity			Reed	Proximity			Reed	Proximity			Reed
	T2,T3	T2W,T3W	T*Y*		T2,T3	T2W,T3W	T*Y*		T2,T3	T2W,T3W	T*Y*		T2,T3	T2W,T3W	T*Y*		T2,T3	T2W,T3W	T*Y*	
ø20	10				25				50	70	70	55	55	70	70	55	75	110	110	90
ø25	10				25				50	70	70	55	55	70	70	55	75	110	110	90
ø32	10				25				50	70	70	55	55	70	70	55	75	110	110	90
ø40	10				25				50	70	70	55	55	70	70	55	75	110	110	90
ø50	10				25				50	65	65	55	55	65	65	55	75	110	110	90
ø63	10				25				50	65	65	55	55	65	65	55	75	110	110	90
ø80	10				25				50	65	65	55	55	65	65	55	75	110	110	90
ø100	10				25				50	65	65	55	55	65	65	55	75	110	110	90

*1: The switch rail mounting position changes for those with one switch and a stroke between 10mm and 25mm. Please refer to page 42 for the mounting position.

● Switch mounting: Band

Switch quantity / Bore size (mm)	1				2				3				4				5			
	Proximity			Reed	Proximity			Reed	Proximity			Reed	Proximity			Reed	Proximity			Reed
	T2,T3	T2W,T3W	T*Y*		T0,T5 T2,T3	T2W,T3W	T*Y*		T0,T5 T2,T3	T2W,T3W	T*Y*		T0,T5 T2,T3	T2W,T3W	T*Y*		T0,T5 T2,T3	T2W,T3W	T*Y*	
ø20	10				25	30	35	25	50	55	55	50	70	75	80	70	95	100	100	95
ø25	10				25	30	35	25	50	55	55	50	70	75	80	70	95	100	100	95
ø32	10				25	30	35	25	50	55	55	50	70	75	80	70	95	100	100	95
ø40	10				25	30	35	25	50	55	55	50	70	75	80	70	95	100	100	95
ø50	10				25	30	35	25	50	55	55	50	70	75	80	70	95	100	100	95
ø63	10				25	30	35	25	50	55	55	50	70	75	80	70	95	100	100	95
ø83	10				25	30	35	25	50	55	55	50	70	75	80	70	95	100	100	95
ø100	10				25	30	35	25	50	55	55	50	70	75	80	70	95	100	100	95

Switch specifications

● 1-color/2-color display/for AC magnetic field

Descriptions	Proximity 2-wire				Proximity 3-wire				Reed 2-wire							Proximity 2-wire
	T1H/T1V	T2H/T2V/T2JH/T2JV	T2YH/T2YV	T2WH/T2WV	T3H/T3V	T3PH/T3PV	T3YH/T3YV	T3WH/T3WV	T0H/T0V		T5H/T5V		T8H/T8V			T2YD(*3) T2YDT
Applications	Programmable controller relay, small solenoid valve	Programmable controller			Programmable controller, relay				Programmable controller, relay		Programmable controller, relay IC circuit (without indicator lamp), serial connection		Programmable controller, relay			Programmable controller
Output method	-				NPN output	PNP output	NPN output	NPN output	-							
Power supply voltage	-				DC10 to 28V				-							
Load voltage	AC85 to 265V	DC10 to 30V		DC24V±10%	DC30V or less				DC12/24V	AC110V	DC5/12/24V	AC110V	DC12/24V	AC110V	AC220V	DC24V±10%
Load current	5 to 100mA	5 to 20mA(*2)			100mA or less		50mA or less		5 to 50mA	7 to 20mA	50mA or less	20mA or less	5 to 50mA	7 to 20mA	7 to 10mA	5~20mA
Indicator lamp	LED (Lit when ON)	LED (Lit when ON)	Red/green LED (Lit when ON)	Red/green LED (Lit when ON)	LED (Lit when ON)	Yellow LED (Lit when ON)	Red/green LED (Lit when ON)	Red/green LED (Lit when ON)	LED (Lit when ON)		Without indicator lamp		LED (Lit when ON)			Red/green LED (Lit when ON)
Leakage current	1 mA or less with 100 VAC 2 mA or less with 200 VAC	1 mA or less			10 μA or less				0mA							1 mA or less
Weight g	1m:33 3m:87 5m:142	1m:18 3m:49 5m:80	1m:33 3m:87 5m:142	1m:18 3m:49 5m:80	1m:18 3m:49 5m:80	1m:33 3m:87 5m:142	1m:18 3m:49 5m:80		1m:18 3m:49 5m:80				1m:33 3m:87 5m:142			1m:61 3m:166 5m:272

*1: Refer to page 309 for detailed switch specifications, dimensions, etc.
*2: Max. load current: 20mA at 25°C.The current is lower than 25 mA if the operating ambient temperature around the switch is higher than 20˚C. (60 to 5 mA at 10°C)
*3: AC magnetic field switches (T2YD and T2YDT) cannot be used in a DC magnetic field environment.

Cylinder weight

(Unit:kg)

Descriptions / Bore size(mm)	Product weight when stroke length (S) = 0 mm: Basic (00)	Axial foot (LB)	Flange (FA/FB)	Switch weight (per 1 pc.)	Additional weight per S = 10 mm	Additional weight per S = 10 mm (With switch rail)	Band weight per switch
ø20	0.14	0.24	0.15	Refer to the weight in the switch specifications.	0.01	0.012	0.007
ø25	0.22	0.34	0.24		0.014	0.016	0.007
ø32	0.33	0.47	0.37		0.018	0.02	0.007
ø40	0.52	0.71	0.57		0.03	0.032	0.007
ø50	0.95	1.38	1.24		0.044	0.046	0.008
ø63	1.30	1.97	1.75		0.052	0.054	0.009
ø80	2.47	3.43	3.18		0.07	0.072	0.010
ø100	3.83	5.58	5.18		0.098	0.10	0.010

Example: Weight of SCM-LB-40B-100-T2H-D-P7
- Product weight when S = 0 mm ····· 0.71kg
- Additional weight when S = 100 mm ····· $0.032\times\frac{100}{10}=0.32$kg
- Weight of 2 switches ····· 0.018×2=0.036kg
- Product weight ····· 0.71+0.32+0.036=1.066kg

Theoretical thrust table

(Unit:N)

Bore size (mm)	Operating direction	Working pressure MPa: 0.1	0.15	0.2	0.3	0.4	0.5	0.6	0.7	0.8	0.9	1.0
ø20	Push	-	47.1	62.8	94.2	1.26×10^2	1.57×10^2	1.88×10^2	2.20×10^2	2.51×10^2	2.83×10^2	3.14×10^2
	Pull	-	39.6	52.8	79.2	1.06×10^2	1.32×10^2	1.58×10^2	1.85×10^2	2.11×10^2	2.38×10^2	2.64×10^2
ø25	Push	-	73.6	98.2	1.47×10^2	1.96×10^2	2.45×10^2	2.95×10^2	3.44×10^2	3.93×10^2	4.42×10^2	4.91×10^2
	Pull	-	61.9	82.5	1.24×10^2	1.65×10^2	2.06×10^2	2.47×10^2	2.89×10^2	3.30×10^2	3.71×10^2	4.12×10^2
ø32	Push	-	1.21×10^2	1.61×10^2	2.41×10^2	3.22×10^2	4.02×10^2	4.83×10^2	5.63×10^2	6.43×10^2	7.24×10^2	8.04×10^2
	Pull	-	1.04×10^2	1.38×10^2	2.07×10^2	2.76×10^2	3.46×10^2	4.15×10^2	4.84×10^2	5.53×10^2	6.22×10^2	6.91×10^2
ø40	Push	-	1.88×10^2	2.51×10^2	3.77×10^2	5.03×10^2	6.28×10^2	7.54×10^2	8.80×10^2	1.01×10^3	1.13×10^3	1.26×10^3
	Pull	-	1.58×10^2	2.11×10^2	3.17×10^2	4.22×10^2	5.28×10^2	6.33×10^2	7.39×10^2	8.44×10^2	9.50×10^2	1.06×10^3
ø50	Push	1.96×10^2	2.95×10^2	3.93×10^2	5.89×10^2	7.85×10^2	9.82×10^2	1.18×10^3	1.37×10^3	1.57×10^3	1.77×10^3	1.96×10^3
	Pull	1.65×10^2	2.47×10^2	3.30×10^2	4.95×10^2	6.60×10^2	8.25×10^2	9.90×10^2	1.15×10^3	1.32×10^3	1.48×10^3	1.65×10^3
ø63	Push	3.12×10^2	4.68×10^2	6.23×10^2	9.35×10^2	1.25×10^3	1.56×10^3	1.87×10^3	2.18×10^3	2.49×10^3	2.81×10^3	3.12×10^3
	Pull	2.80×10^2	4.20×10^2	5.61×10^2	8.41×10^2	1.12×10^3	1.40×10^3	1.68×10^3	1.96×10^3	2.24×10^3	2.52×10^3	2.80×10^3
ø80	Push	5.03×10^2	7.54×10^2	1.01×10^3	1.51×10^3	2.01×10^3	2.51×10^3	3.02×10^3	3.52×10^3	4.02×10^3	4.52×10^3	5.03×10^3
	Pull	4.54×10^2	6.80×10^2	9.07×10^2	1.36×10^3	1.81×10^3	2.27×10^3	2.72×10^3	3.17×10^3	3.63×10^3	4.08×10^3	4.54×10^3
ø100	Push	7.85×10^2	1.18×10^3	1.57×10^3	2.36×10^3	3.14×10^3	3.93×10^3	4.71×10^3	5.50×10^3	6.28×10^3	7.07×10^3	7.85×10^3
	Pull	7.15×10^2	1.07×10^3	1.43×10^3	2.14×10^3	2.86×10^3	3.57×10^3	4.29×10^3	5.00×10^3	5.72×10^3	6.43×10^3	7.15×10^3

SCPD3
SCM
SSD2
MDC2
SMG
LCM
LCR
LCG
LCX
STM
STG
STR2
MRL2
GRC
Cylinder switch
MN3E MN4E
4GA/B
M4GA/B
MN4GA/B
F.R (module unit)
Clean F.R
Precision R
Press gauge Diff. press gauge
Electro-pneumatic R
Speed controller
Auxiliary valve
Fitting/ tube
Clean air unit
Pressure sensor
Flow rate sensor
Valve for air blow
Ending

How to order

Without switch (Magnet for switch incorporated)

SCM - LB - 40 B - 100 ——— Q P7

With switch (Magnet for switch incorporated)

SCM - LB - 40 B - 100 - T2H - D - ○ Q P7

Ⓐ Mounting *1

Ⓑ Bore size

Ⓒ Cushion

Ⓓ Stroke length

Ⓔ Switch model No. *3 *4

Ⓕ Switch quantity

Ⓖ Switch mounting

Ⓗ Option *5

Ⓘ Clean room specifications *6

Code	Content
Ⓐ Mounting	
00	Basic
LB	Axial foot
FA	Rod end flange
FB	Head end flange

Ⓑ Bore size(mm)	
20	ø20
25	ø25
32	ø32
40	ø40
50	ø50
63	ø63
80	ø80
100	ø100

Ⓒ Cushion	
B	Both sides air cushioned
R	Rod end air cushioned
H	Head end air cushion
D	Both sides rubber cushioned

Ⓓ Stroke length(mm)

Bore size	Stroke length *2	Custom stroke length
ø20 to ø32	**10** to **1000**	**By 1 mm increments**
ø40 to ø100	**10** to **1500**	

Ⓔ Switch model No.

Lead wire straight	Lead wire L-shaped	Contact	Voltage AC	Voltage DC	Display	Lead wire
T0H*	**T0V***	Reed	●	●	1 -color display	2 wires
T5H*	**T5V***	Reed	●	●	Without indicator lamp	2 wires
T8H*	**T8V***	Reed	●	●	1 -color display	2 wires
T1H*	**T1V***	Proximity	●		1 -color display	2 wires
T2H*	**T2V***	Proximity		●	1 -color display	2 wires
T3H*	**T3V***	Proximity		●	1 -color display	3 wires
T3PH*	**T3PV***	Proximity		●	1 -color display	3 wires
T2WH*	**T2WV***	Proximity		●	2 -color display	2 wires
T2YH*	**T2YV***	Proximity		●	2 -color display	2 wires
T3WH*	**T3WV***	Proximity		●	2 -color display	3 wires
T3YH*	**T3YV***	Proximity		●	2 -color display	3 wires
T2YD*	**–**	Proximity		●	2 -color display for AC magnetic field	2 wires
T2YDT*	**–**	Proximity		●	2 -color display for AC magnetic field	2 wires
T2JH*	**T2JV***	Proximity		●	1 -color display off-delay	2 wires

***Lead wire length**	
Blank	1m(standard)
3	3m(option)
5	5m(option)

Ⓕ Switch quantity	
R	1 (on rod end)
H	1 (on head end)
D	2
T	3
4	4(when there are more than 4 switches, indicate switch quantity)

Ⓖ Switch mounting	
Blank	Rail
Z	Band

Ⓗ Option	
Q	Switch rail attached at shipment

Ⓘ Clean room specifications

	Structure	Material restriction
P7	Exhaust treatment	–
P71	Vacuum treatment	–
P5	Exhaust treatment	Copper-based/silicon-based/halogen-based materials (fluorine, chlorine, bromine) are prohibited
P51	Vacuum treatment	Copper-based/silicon-based/halogen-based materials (fluorine, chlorine, bromine) are prohibited

⚠ Precautions for model No. selection

*1: Mounting bracket will be shipped with the product.
*2: Refer to page 26 for the number of installed switches and the minimum stroke length.
*3: Ⓔ Switches other than switch model No. are also available. (custom order)
For details, refer to page 309.
*4: T8H/V switches cannot be mounted when the bore size is from ø20 to ø40 and the switch mounting is the rail type.
*5: "Q" (switch rail attached at shipment) is not available for the "Z" switch mounting.
*6: "P5" and "P51" are custom order products.
*7: Mounting 00 does not allow front mounting.
*8: Switches are shipped with the product. Contact CKD when shipment must be assembled.

[Example of model No.]

SCM-LB-40B-100-T2H-D-QP7

Model: Round shaped cylinder, double acting

Ⓐ Mounting : Axial foot
Ⓑ Bore size : ø40 mm
Ⓒ Cushion : ir cushion on both sides
Ⓓ Stroke length : 100mm
Ⓔ Switch model No. : Proximity T2H switch, lead wire 1 m
Ⓕ Switch quantity : 2
Ⓖ Switch mounting : Rail
Ⓗ Option : Switch rail attached at shipment
Ⓘ Clean room specifications : Exhaust treatmen

Dimensions

● Basic(00)
[Rubber cushioned]

• Switch mounting: Rail

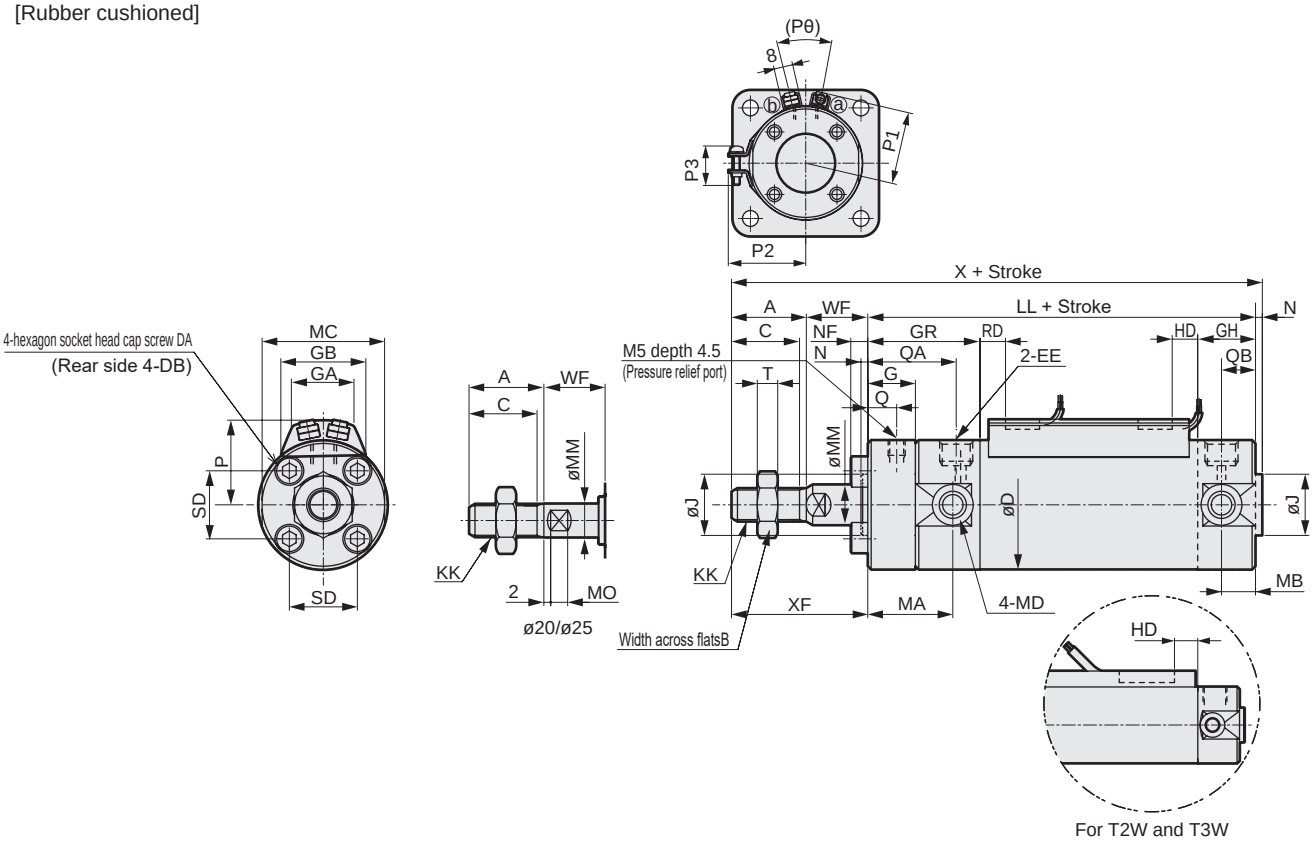

[Air cushioned]

• Switch mounting: Rail

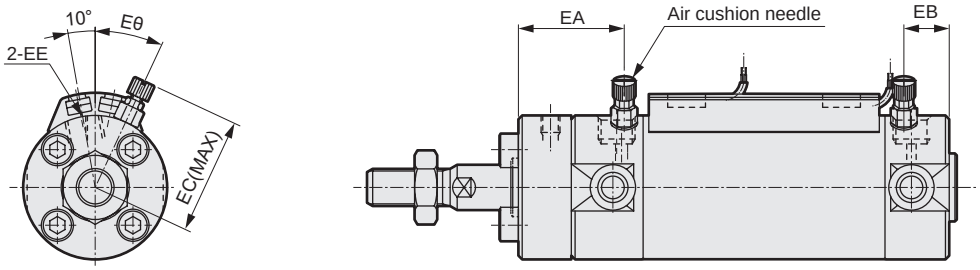

Code / Bore size(mm)	Basic (00) basic dimensions																					
	A	B	C	D	DA	DB	EE	J	KK	LL	MA	MB	MC	MD	MM	MN	MO	N	G	Q	QA	QB
ø20	18	13	15.5	26	M4×20	M4 depth 6.5	Rc1/8	12	M8	83	25	11	24	M5	8	6	4	2	14	8.5	26	10
ø25	22	17	19.5	31	M5×20	M5 depth 6.5	Rc1/8	14	M10×1.25	83	25	11	29	M6	10	8	5	2	14	8.5	26	10
ø32	22	17	19.5	38	M5×20	M5 depth 7.5	Rc1/8	18	M10×1.25	85	25	10	36	M8	12	10	5.5	2	14	8.5	26	10
ø40	30	22	27	47	M6×25	M6 depth 12	Rc1/8	25	M14×1.5	92	26	10	44	M10	16	14	6	2	14	8.5	27	12
ø50	35	27	32	58	M8×25	M8 depth 16	Rc1/4	30	M18×1.5	104	27	12	55	M12	20	17	8	2	14	8.5	29	12
ø63	35	27	32	72	M10×30	M10 depth 16	Rc1/4	32	M18×1.5	104	27	12	69	M14	20	17	8	2	14	8.5	29	12
ø80	40	32	37	89	M10×30	M10 depth 22	Rc3/8	40	M22×1.5	123	–	–	80	–	25	22	11	3	15	9	30	15
ø100	40	41	37	110	M12×30	M12 depth 22	Rc1/2	50	M26×1.5	124	–	–	100	–	30	27	13	3	16	10	31	15

Code / Bore size(mm)	Basic (00) basic dimensions						Air cushion					With switch										
														Rail mounting								
	SD	T	NF	WF	X	XF	EA	EB	EC	EE'	Eθ	GH	GR	P	GA	GB	HD			RD		
																	T0,T5	T2,T3	T2W T3W	T0,T5	T2,T3	T2W T3W
ø20	14	5	4.5	17	120	35	28	12	27	M5	30°	17	33	19.5	18	23	3.0	6.5	8.5	7.5	7.5	9.5
ø25	16.5	6	5.6	18	125	40	28	12	29.5	M5	30°	17	33	22	18	24.4	2.0	5.5	7.5	8.5	8.5	10.5
ø32	20	6	5.6	18	127	40	28	12	32.8	Rc1/8	25°	17	33	25.5	18	25	3.0	6.5	8.5	9.5	9.5	11.5
ø40	26	8	6.6	20	144	50	29	14	36.6	Rc1/8	20°	19	34	30	18	25.7	5.0	8.5	10.5	11.5	11.5	13.5
ø50	32	11	8.9	23	164	58	32.5	15.5	43	Rc1/4	20°	22	39	35.5	18	26.2	7.5	11.0	13.0	13.0	13.0	15.0
ø63	38	11	11.1	23	164	58	32.5	15.5	50	Rc1/4	20°	22	39	42.5	18	26.5	7.5	11.0	13.0	13.0	13.0	15.0
ø80	50	13	11.1	31	197	71	35	20	58.5	Rc3/8	20°	28	43	51	18	26.7	9.5	13.0	15.0	20.0	20.0	22.0
ø100	60	16	13.2	31	198	71	36	20	69	Rc1/2	20°	28	44	61.5	18	26.7	10.0	13.5	15.5	19.5	19.5	21.5

1: Refer to page 42 for dimensions of HD, RD and projections of T2Y, T3Y, T8, and T1.

SCPD3
SCM
SSD2
MDC2
SMG
LCM
LCR
LCG
LCX
STM
STG
STR2
MRL2
GRC
Cylinder switch
MN3E MN4E
4GA/B
M4GA/B
MN4GA/B
F.R (module unit)
Clean F.R
Precision R
Press gauge Diff. press gauge
Electro-pneumatic R
Speed controller
Auxiliary valve
Fitting/ tube
Clean air unit
Pressure sensor
Flow rate sensor
Valve for air blow
Ending

Dimensions

● Basic (00)
[Rubber cushioned]

• Switch mounting: Band

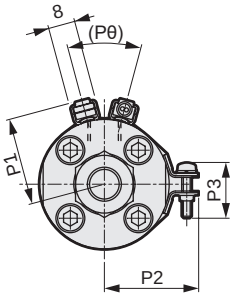

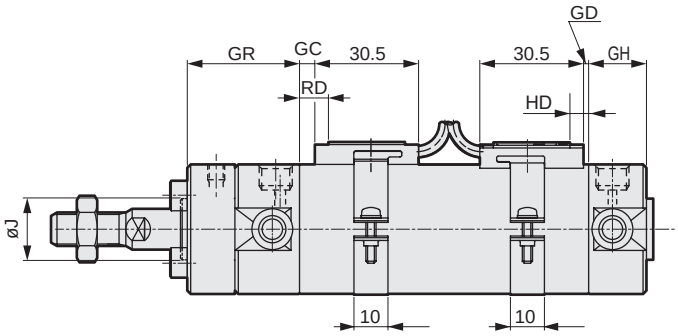

[Air cushioned]

• Switch mounting: Band

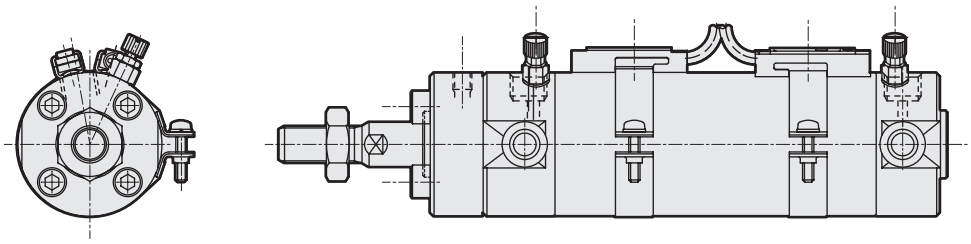

Code	With switch																	
	GH	GR	Band mounting															
			P1	P2	P3	(Pθ)	GD			GC			HD			RD		
Bore size(mm)							T0,T5	T2,T3	T2W T3W	T0,T5	T2,T3	T2W T3W	T0,T5	T2,T3	T2W T3W	T0,T5	T2,T3	T2W T3W
ø20	17	33	19.6	21.5	14	38°	2.5	2.5	4.5	3.5	3.5	5.5	6.5	6.5	8.5	7.5	7.5	9.5
ø25	17	33	22.1	23.9	14	34°	1.5	1.5	3.5	4.5	4.5	6.5	5.5	5.5	7.5	8.5	8.5	10.5
ø32	17	33	25.6	27.6	16	30°	2.5	2.5	4.5	5.5	5.5	7.5	6.5	6.5	8.5	9.5	9.5	11.5
ø40	19	34	30.2	32.1	16	26°	4.5	4.5	6.5	7.5	7.5	9.5	8.5	8.5	10.5	11.5	11.5	13.5
ø50	22	39	35.7	37.4	16	22°	7.0	7.0	9.0	9.0	9.0	11.0	11.0	11.0	13.0	13.0	13.0	15.0
ø63	22	39	42.7	44.4	16	20°	7.0	7.0	9.0	9.0	9.0	11.0	11.0	11.0	13.0	13.0	13.0	15.0
ø80	28	43	51.2	53.0	16	16°	9.0	9.0	11.0	16.0	16.0	18.0	13.0	13.0	15.0	20.0	20.0	22.0
ø100	28	44	61.7	63.5	16	16°	9.5	9.5	11.5	15.5	15.5	17.5	13.5	13.5	15.5	19.5	19.5	21.5

1: Refer to page 43 for HD, RD, and protrusion dimensions for T2Y, T3Y, T8, and T1.

Dimensions

● Axial foot (LB)

• Switch mounting: Rail

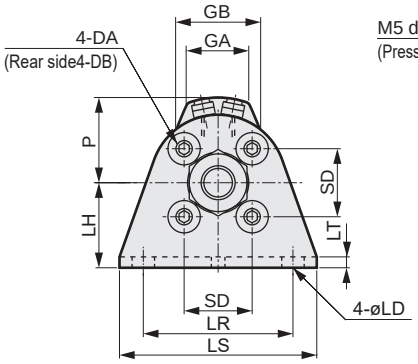

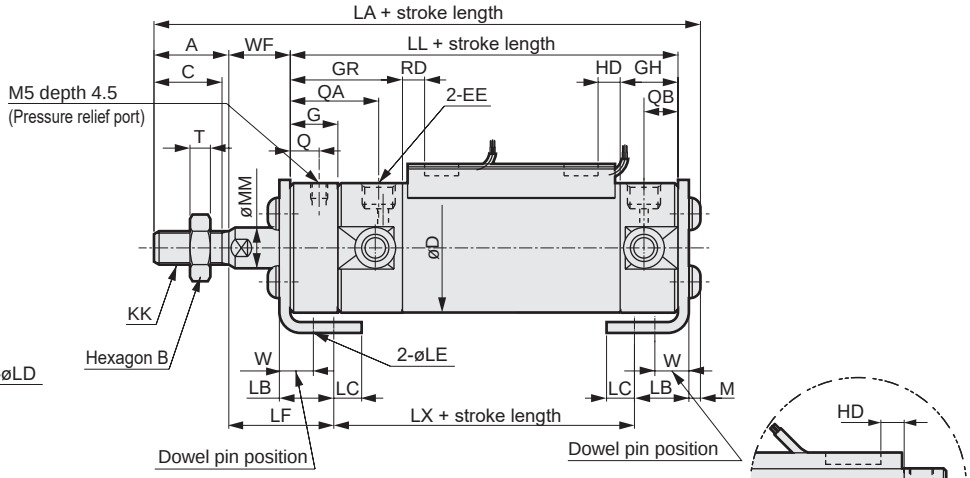

• Switch mounting: Band

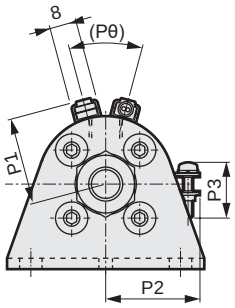

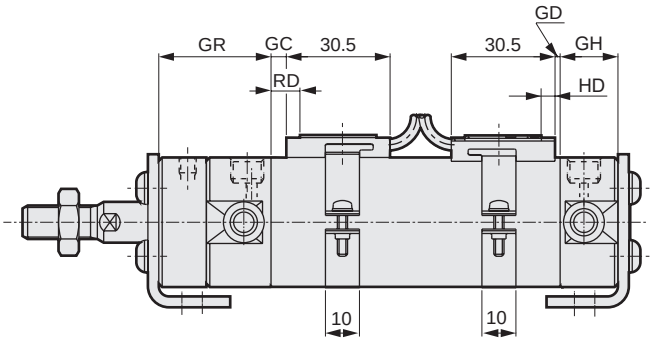

*Dimensions related to the needle and the port sizes of the air cushion are identical to those of the basic.

Code / Bore size (mm)	Axial foot (LB) basic dimensions																			
	A	B	C	D	DA	DB	EE	G	KK	LA	LB	LC	LD	LE	LF	LH	LL	LR	LS	LT
ø20	18	13	15.5	26	M4×22	M4	Rc1/8	14	M8	123.8	15.1	7.1	5.7	4	28.9	20	83	32	44	3.2
ø25	22	17	19.5	31	M5×22	M5	Rc1/8	14	M10×1.25	129.6	15.1	7.1	5.7	4	29.9	22	83	36	49	3.2
ø32	22	17	19.5	38	M5×22	M5	Rc1/8	14	M10×1.25	131.6	16.1	8.1	6.8	4	30.9	25	85	44	58	3.2
ø40	30	22	27	47	M6×25	M6	Rc1/8	14	M14×1.5	149.2	16.6	9.1	6.8	4	33.4	30	92	54	71	3.2
ø50	35	27	32	58	M8×30	M8	Rc1/4	14	M18×1.5	171.5	22	11	9	5	40.5	40	104	66	86	4.5
ø63	35	27	32	72	M10×30	M10	Rc1/4	14	M18×1.5	171.5	22	13	11	5	40.5	45	104	82	106	4.5
ø80	40	32	37	89	M10×40	M10	Rc3/8	15	M22×1.5	204.5	28.5	14	11	6	55	55	123	100	125	4.5
ø100	40	41	37	110	M12X40	M12	Rc1/2	16	M26×1.5	208	30	16	14	6	55	65	124	120	150	6

Code / Bore size (mm)	LX	M	MM	Q	QA	QB	SD	T	W	WF
ø20	59.2	2.6	8	8.5	26	10	14	5	10	17
ø25	59.2	3.4	10	8.5	26	10	16.5	6	10	18
ø32	59.2	3.4	12	8.5	26	10	20	6	10	18
ø40	65.2	4	16	8.5	27	12	26	8	10	20
ø50	69	5	20	8.5	29	12	32	11	17.5	23
ø63	69	5	20	8.5	29	12	38	11	17.5	23
ø80	75	6	25	9	30	15	50	13	20	31
ø100	76	7	30	10	31	15	60	16	20	31

Code / Bore size (mm)	With switch																											
	GH	GR	Rail mounting									Band mounting																
			P	GA	GB	HD			RD			P1	P2	P3	(Pθ)	GD			GC			HD			RD		
						T0,T5	T2,T3	T2W T3W	T0,T5	T2,T3	T2W T3W					T0,T5	T2,T3	T2W T3W	T0,T5	T2,T3	T2W T3W	T0,T5	T2,T3	T2W T3W	T0,T5	T2,T3	T2W T3W
ø20	17	33	19.5	18	23	3.0	6.5	8.5	7.5	7.5	9.5	19.6	21.5	14	38°	2.5	2.5	4.5	3.5	3.5	5.5	6.5	6.5	8.5	7.5	7.5	9.5
ø25	17	33	22	18	24.4	2.0	5.5	7.5	8.5	8.5	10.5	22.1	23.9	14	34°	1.5	1.5	3.5	4.5	4.5	6.5	5.5	5.5	7.5	8.5	8.5	10.5
ø32	17	33	25.5	18	25	3.0	6.5	8.5	9.5	9.5	11.5	25.6	27.6	16	30°	2.5	2.5	4.5	5.5	5.5	7.5	6.5	6.5	8.5	9.5	9.5	11.5
ø40	19	34	30	18	25.7	5.0	8.5	10.5	11.5	11.5	13.5	30.2	32.1	16	26°	4.5	4.5	6.5	7.5	7.5	9.5	8.5	8.5	10.5	11.5	11.5	13.5
ø50	22	39	35.5	18	26.2	7.5	11.0	13.0	13.0	13.0	15.0	35.7	37.4	16	22°	7.0	7.0	9.0	9.0	9.0	11.0	11.0	11.0	13.0	13.0	13.0	15.0
ø63	22	39	42.5	18	26.5	7.5	11.0	13.0	13.0	13.0	15.0	42.7	44.4	16	20°	7.0	7.0	9.0	9.0	9.0	11.0	11.0	11.0	13.0	13.0	13.0	15.0
ø80	28	43	51	18	26.7	9.5	13.0	15.0	20.0	20.0	22.0	51.2	53.0	16	16°	9.0	9.0	11.0	16.0	16.0	18.0	13.0	13.0	15.0	20.0	20.0	22.0
ø100	28	44	61.5	18	26.7	10.0	13.5	15.5	19.5	19.5	21.5	61.7	63.5	16	16°	9.5	9.5	11.5	15.5	15.5	17.5	13.5	13.5	15.5	19.5	19.5	21.5

1: Refer to pages 42 and 43 for HD, RD, and protruding dimensions of T2Y, T3Y, T8, T1.

SCPD3
SCM
SSD2
MDC2
SMG
LCM
LCR
LCG
LCX
STM
STG
STR2
MRL2
GRC
Cylinder switch
MN3E MN4E
4GA/B
M4GA/B
MN4GA/B
F.R (module unit)
Clean F.R
Precision R
Press gauge Diff. press gauge
Electro-pneumatic R
Speed controller
Auxiliary valve
Fitting/ tube
Clean air unit
Pressure sensor
Flow rate sensor
Valve for air blow
Ending

Dimensions

● Rod end flange (FA)

• Switch mounting: Rail

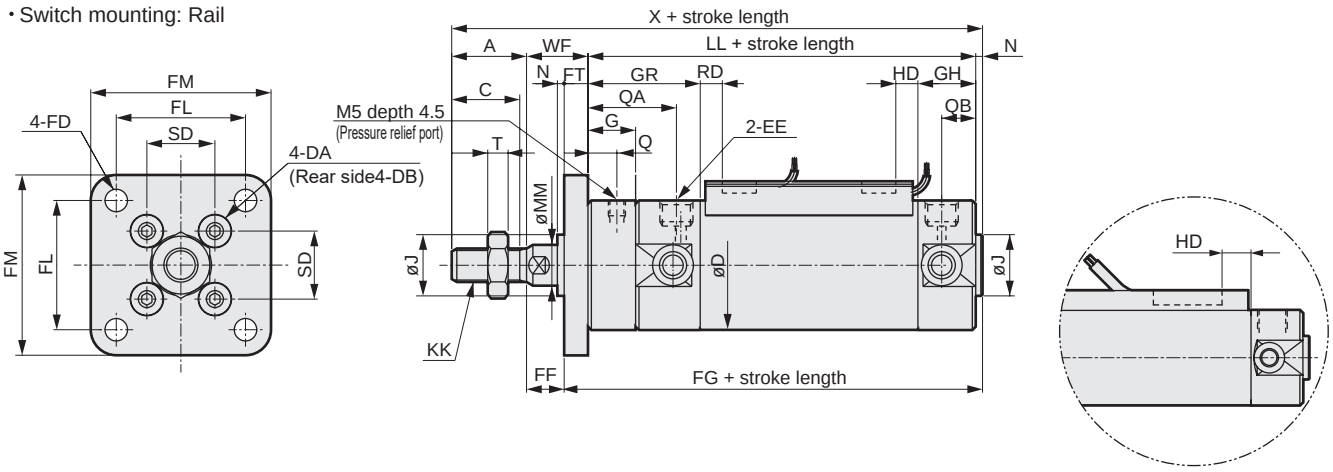

For T2W and T3W

• Switch mounting: Band

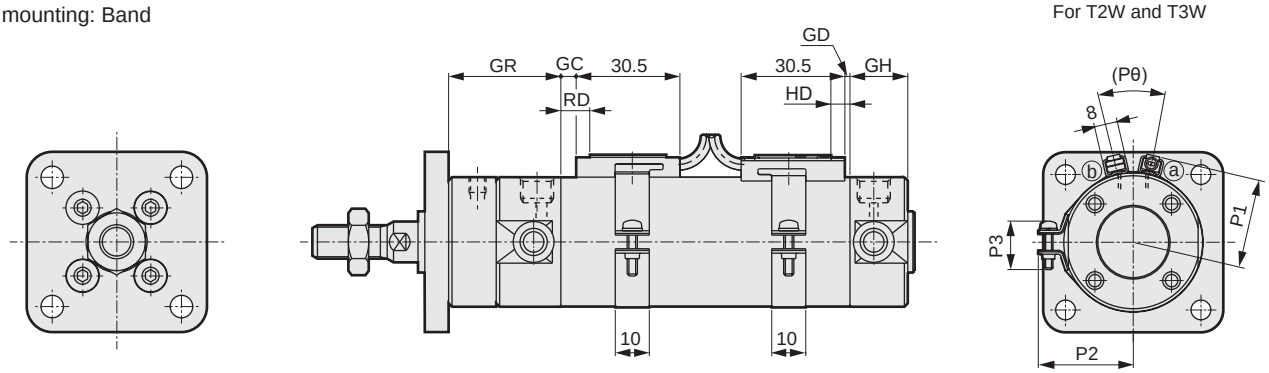

*Dimensions related to the needle and the port sizes of the air cushion are identical to those of the basic.

Code / Bore size(mm)	Rod end flange (FA) basic dimensions																	
	A	B	C	D	DA	DB	EE	FD	FF	FG	FL	FM	FT	G	J	KK	LL	MM
ø20	18	13	15.5	26	M4×22	M4 depth 6.5	Rc1/8	5.5	11	91	28	40	6	14	12	M8	83	8
ø25	22	17	19.5	31	M5×22	M5 depth 6.5	Rc1/8	5.5	11	92	32	44	7	14	14	M10×1.25	83	10
ø32	22	17	19.5	38	M5×22	M5 depth 7.5	Rc1/8	6.6	11	94	38	53	7	14	18	M10×1.25	85	12
ø40	30	22	27	47	M6×25	M6 depth 12	Rc1/8	6.6	12	102	46	61	8	14	25	M14×1.5	92	16
ø50	35	27	32	58	M8×30	M8 depth 16	Rc1/4	9	14	115	58	76	9	14	30	M18×1.5	104	20
ø63	35	27	32	72	M10×30	M10 depth 16	Rc1/4	11	14	115	70	92	9	14	32	M18×1.5	104	20
ø80	40	32	37	89	M10×40	M10 depth 22	Rc3/8	11	20	137	82	104	11	15	40	M22×1.5	123	25
ø100	40	41	37	110	M12×40	M12 depth 22	Rc1/2	13	17	141	100	128	14	16	50	M26×1.5	124	30

Code / Bore size(mm)	N	Q	QA	QB	SD	T	WF	X
ø20	2	8.5	26	10	14	5	17	120
ø25	2	8.5	26	10	16.5	6	18	125
ø32	2	8.5	26	10	20	6	18	127
ø40	2	8.5	27	12	26	8	20	144
ø50	2	8.5	29	12	32	11	23	164
ø63	2	8.5	29	12	38	11	23	164
ø80	3	9	30	15	50	13	31	197
ø100	3	10	31	15	60	16	31	198

Code / Bore size(mm)	With switch																										
	GH	GR	Rail mounting									Band mounting															
			P	GA	GB	HD			RD			P1	P2	P3	(Pθ)	GD			GC			HD			RD		
						T0,T5	T2,T3	T2W T3W	T0,T5	T2,T3	T2W T3W					T0,T5	T2,T3	T2W T3W	T0,T5	T2,T3	T2W T3W	T0,T5	T2,T3	T2W T3W	T0,T5	T2,T3	T2W T3W
ø20	17	33	19.5	18	23	3.0	6.5	8.5	7.5	7.5	9.5	19.6	21.5	14.4	38°	2.5	2.5	4.5	3.5	3.5	5.5	6.5	6.5	8.5	7.5	7.5	9.5
ø25	17	33	22	18	24.4	2.0	5.5	7.5	8.5	8.5	10.5	22.1	23.9	14.4	34°	1.5	1.5	3.5	4.5	4.5	6.5	5.5	5.5	7.5	8.5	8.5	10.5
ø32	17	33	25.5	18	25	3.0	6.5	8.5	9.5	9.5	11.5	25.6	27.6	16.4	30°	2.5	2.5	4.5	5.5	5.5	7.5	6.5	6.5	8.5	9.5	9.5	11.5
ø40	19	34	30	18	25.7	5.0	8.5	10.5	11.5	11.5	13.5	30.2	32.1	16.4	26°	4.5	4.5	6.5	7.5	7.5	9.5	8.5	8.5	10.5	11.5	11.5	13.5
ø50	22	39	35.5	18	26.2	7.5	11.0	13.0	13.0	13.0	15.0	35.7	37.4	16.4	22°	7.0	7.0	9.0	9.0	9.0	11.0	11.0	11.0	13.0	13.0	13.0	15.0
ø63	22	39	42.5	18	26.5	7.5	11.0	13.0	13.0	13.0	15.0	42.7	44.4	16.4	20°	7.0	7.0	9.0	9.0	9.0	11.0	11.0	11.0	13.0	13.0	13.0	15.0
ø80	28	43	51	18	26.7	9.5	13.0	15.0	20.0	20.0	22.0	51.2	53.0	16.4	16°	9.0	9.0	11.0	16.0	16.0	18.0	13.0	13.0	15.0	20.0	20.0	22.0
ø100	28	44	61.5	18	26.7	10.0	13.5	15.5	19.5	19.5	21.5	61.7	63.5	16.4	16°	9.5	9.5	11.5	15.5	15.5	17.5	13.5	13.5	15.5	19.5	19.5	21.5

1: Refer to pages 42 and 43 for HD, RD, and protruding dimensions of T2Y, T3Y, T8, T1.

Dimensions

● Head end flange (FB)
• Switch mounting: Rail

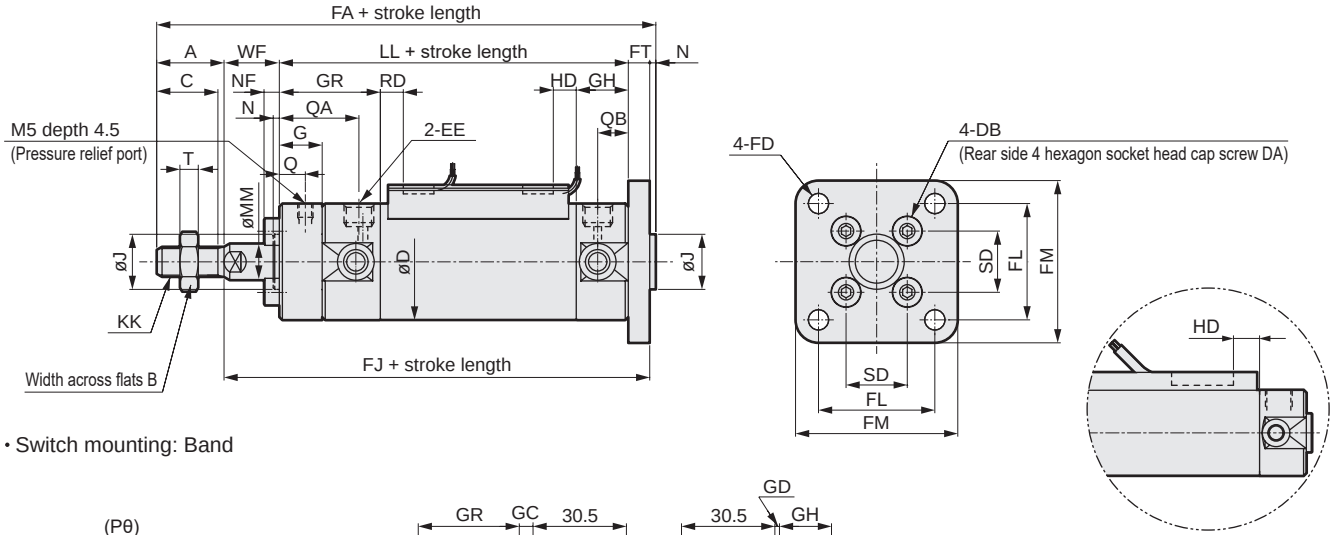

In the case of T2W, T3W

• Switch mounting: Band

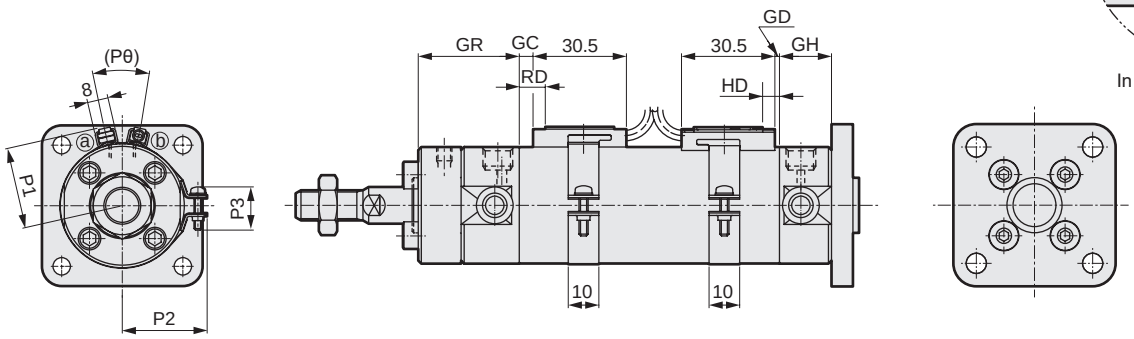

*Dimensions related to the needle and the port sizes of the air cushion are identical to those of the basic.

Code / Bore size(mm)	Rod end flange (FA) basic dimensions																	
	A	B	C	D	DA	DB	EE	FA	FD	FJ	FL	FM	FT	G	J	KK	LL	MM
ø20	18	13	15.5	26	M4×20	M4	Rc1/8	126	5.5	106	28	40	6	14	12	M8	83	8
ø25	22	17	19.5	31	M5×20	M5	Rc1/8	132	5.5	108	32	44	7	14	14	M10×1.25	83	10
ø32	22	17	19.5	38	M5×20	M5	Rc1/8	134	6.6	110	38	53	7	14	18	M10×1.25	85	12
ø40	30	22	27	47	M6×25	M6	Rc1/8	152	6.6	120	46	61	8	14	25	M14×1.5	92	16
ø50	35	27	32	58	M8×25	M8	Rc1/4	173	9	136	58	76	9	14	30	M18×1.5	104	20
ø63	35	27	32	72	M10×30	M10	Rc1/4	173	11	136	70	92	9	14	32	M18×1.5	104	20
ø80	40	32	37	89	M10×30	M10	Rc3/8	208	11	165	82	104	11	15	40	M22×1.5	123	25
ø100	40	41	37	110	M12×30	M12	Rc1/2	212	13	169	100	128	14	16	50	M26×1.5	124	30

Code / Bore size(mm)	N	Q	QA	QB	SD	NF	T	WF
ø20	2	8.5	26	10	14	4.5	5	17
ø25	2	8.5	26	10	16.5	5.6	6	18
ø32	2	8.5	26	10	20	5.6	6	18
ø40	2	8.5	27	12	26	6.6	8	20
ø50	2	8.5	29	12	32	8.9	11	23
ø63	2	8.5	29	12	38	11.1	11	23
ø80	3	9	30	15	50	11.1	13	31
ø100	3	10	31	15	60	13.2	16	31

Code / Bore size(mm)	With switch																										
	GH	GR	Rail mounting									Band mounting															
			P	GA	GB	HD			RD			P1	P2	P3	(Pθ)	GD			GC			HD			RD		
						T0,T5	T2,T3	T2W T3W	T0,T5	T2,T3	T2W T3W					T0,T5	T2,T3	T2W T3W	T0,T5	T2,T3	T2W T3W	T0,T5	T2,T3	T2W T3W	T0,T5	T2,T3	T2W T3W
ø20	17	33	19.5	18	23	3.0	6.5	8.5	7.5	7.5	9.5	19.6	21.5	14.4	38°	2.5	2.5	4.5	3.5	3.5	5.5	6.5	6.5	8.5	7.5	7.5	9.5
ø25	17	33	22	18	24.4	2.0	5.5	7.5	8.5	8.5	10.5	22.1	23.9	14.4	34°	1.5	1.5	3.5	4.5	4.5	6.5	5.5	5.5	7.5	8.5	8.5	10.5
ø32	17	33	25.5	18	25	3.0	6.5	8.5	9.5	9.5	11.5	25.6	27.6	16.4	30°	2.5	2.5	4.5	5.5	5.5	7.5	6.5	6.5	8.5	9.5	9.5	11.5
ø40	19	34	30	18	25.7	5.0	8.5	10.5	11.5	11.5	13.5	30.2	32.1	16.4	26°	4.5	4.5	6.5	7.5	7.5	9.5	8.5	8.5	10.5	11.5	11.5	13.5
ø50	22	39	35.5	18	26.2	7.5	11.0	13.0	13.0	13.0	15.0	35.7	37.4	16.4	22°	7.0	7.0	9.0	9.0	9.0	11.0	11.0	11.0	13.0	13.0	13.0	15.0
ø63	22	39	42.5	18	26.5	7.5	11.0	13.0	13.0	13.0	15.0	42.7	44.4	16.4	20°	7.0	7.0	9.0	9.0	9.0	11.0	11.0	11.0	13.0	13.0	13.0	15.0
ø80	28	43	51	18	26.7	9.5	13.0	15.0	20.0	20.0	22.0	51.2	53.0	16.4	16°	9.0	9.0	11.0	16.0	16.0	18.0	13.0	13.0	15.0	20.0	20.0	22.0
ø100	28	44	61.5	18	26.7	10.0	13.5	15.5	19.5	19.5	21.5	61.7	63.5	16.4	16°	9.5	9.5	11.5	15.5	15.5	17.5	13.5	13.5	15.5	19.5	19.5	21.5

1: Refer to pages 42 and 43 for HD, RD, and protruding dimensions of T2Y, T3Y, T8, T1.

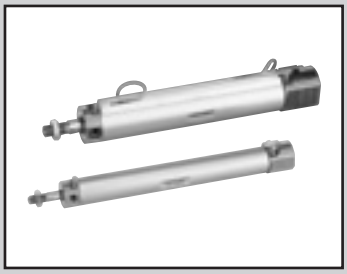

Round shaped cylinder Double acting/position locking

SCM-Q Series

● Bore size: ø20/ø25/ø32/ø40
ø50/ø63/ø80/ø100

JIS symbol

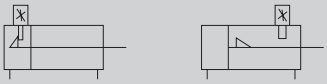

RoHS CAD

Structure and material restriction

	Structure	Material restriction	Model No.		Structure	Material restriction			Model No.
P7 Series	Exhaust treatment	-	P7	P5 Series (custom order product)	Exhaust treatment	Copper-based materials prohibited	Silicon-based materials prohibited	Halogen-based materials prohibited (fluorine, chlorine, bromine)	P5
	Vacuum treatment	-	P71		Vacuum treatment	Copper-based materials prohibited	Silicon-based materials prohibited	Halogen-based materials prohibited (fluorine, chlorine, bromine)	P51

Specifications

Descriptions		SCM-Q-P7*/P5*							
Bore size	mm	ø20	ø25	ø32	ø40	ø50	ø63	ø80	ø100
Actuation		Double acting/position locking							
Working fluid		Compressed air							
Max. working pressure	MPa	1.0							
Min. working pressure	MPa	0.2				0.15			
Proof pressure	MPa	1.6							
Ambient temperature	°C	–10 to 60 (no freezing)							
Port size		M5		Rc1/8		Rc1/4		Rc3/8	Rc1/2
Port size (relief port)		M5							
Stroke tolerance	mm	+ 1.4 0 (to 1000)			+1.4 0 (to 1500)	+ 1.4 0 (to 1000)		+ 1.8 0 (to 1500)	
Working piston speed	mm/s	30 to 200(Use this cushion within allowable energy absorption.)							
Cushion		Air cushion							
Effective air cushion length	mm	8.1	8.1	8.6	8.6	13.4	13.4	15.4	15.4
Lubrication		Not available							
Position locking mechanism		Head end or rod end							
Holding force	N	Max. thrust × 0.7							
Allowable absorbed energy J	Cushioned	0.8	1.2	2.5	3.7	8.0	14.4	25.4	45.6
	No cushion	–	–	–	–	0.057	0.057	0.112	0.153

*1: "No cushion" in the allowable absorption energy indicates the allowable absorption energy of the side that is not indicated ("R" → head side, "H" → rod side) when the one-side air cushion is selected.
*2: Without a cushion, large energy generated by the external load cannot be absorbed. Please provide an external shock absorber.

Stroke length

Bore size(mm)	Standard stroke length (mm)	Max. stroke length (mm)	Min. stroke length (mm)	Bore size (mm)	Standard stroke length (mm	Max. stroke length (mm)	Min. stroke length (mm)
ø20	25/50/75 100/125/150 200/250/300	1000	10	ø50	25/50/75 100/125/150 200/250/300	1500	10
ø25				ø63			
ø32				ø80			
ø40		1500		ø100			

Number of installed switches and the min. stroke length (mm)

● Switch mounting: Rail

Switch quantity	1				2				3				4				5			
Bore size(mm)	Proximity			Reed	Proximity			Reed	Proximity			Reed	Proximity			Reed	Proximity			Reed
	T2,T3	T2W,T3W	T*Y*		T2,T3	T2W,T3W	T*Y*		T2,T3	T2W,T3W	T*Y*		T2,T3	T2W,T3W	T*Y*		T2,T3	T2W,T3W	T*Y*	
ø20	10				25				50	70	70	55	55	70	70	55	75	110	110	90
ø25	10				25				50	70	70	55	55	70	70	55	75	110	110	90
ø32	10				25				50	70	70	55	55	70	70	55	75	110	110	90
ø40	10				25				50	70	70	55	55	70	70	55	75	110	110	90
ø50	10				25				50	65	65	55	55	65	65	55	75	110	110	90
ø63	10				25				50	65	65	55	55	65	65	55	75	110	110	90
ø80	10				25				50	65	65	55	55	65	65	55	75	110	110	90
ø100	10				25				50	65	65	55	55	65	65	55	75	110	110	90

● Switch mounting: Band

Switch quantity	1				2				3				4				5			
Bore size(mm)	Proximity			Reed	Proximity			Reed	Proximity			Reed	Proximity			Reed	Proximity			Reed
	T2,T3	T2W,T3W	T*Y*		T2,T3	T2W,T3W	T*Y*		T2,T3	T2W,T3W	T*Y*		T2,T3	T2W,T3W	T*Y*		T2,T3	T2W,T3W	T*Y*	
ø20	10				25	30	35	25	50	55	55	50	75	75	80	70	95	100	100	95
ø25	10				25	30	35	25	50	55	55	50	75	75	80	70	95	100	100	95
ø32	10				25	30	35	25	50	55	55	50	75	75	80	70	95	100	100	95
ø40	10				25	30	35	25	50	55	55	50	75	75	80	70	95	100	100	95
ø50	10				25	30	35	25	50	55	55	50	75	75	80	70	95	100	100	95
ø63	10				25	30	35	25	50	55	55	50	75	75	80	70	95	100	100	95
ø83	10				25	30	35	25	50	55	55	50	75	75	80	70	95	100	100	95
ø100	10				25	30	35	25	50	55	55	50	75	75	80	70	95	100	100	95

*1: The switch rail mounting position changes for those with one switch and a stroke between 10mm and 25mm.Please refer to page 42 for the mounting position.

Switch specifications

● 1-color/2-color display/for AC magnetic field

Descriptions	Proximity 2-wire				Proximity 3-wire				Reed 2-wire							Proximity 2-wire
	T1H/T1V	T2H/T2V/T2JH/T2JV	T2YH/T2YV	T2WH/T2WV	T3H/T3V	T3PH/T3PV	T3YH/T3YV	T3WH/T3WV	T0H/T0V		T5H/T5V		T8H/T8V			T2YD(*3) T2YDT
Applications	Programmable controller relay, small solenoid valve	Programmable controller			Programmable controller, relay				Programmable controller, relay		Programmable controller, relay IC circuit (without indicator lamp), serial connection		Programmable controller, relay			Programmable controller
Output method	-				NPN output	PNP output	NPN output	NPN output	-							
Power supply voltage	-				DC10 to 28V				-							
Load voltage	AC85 to 265V	DC10 to 30V		DC24V±10%	DC30V or less				DC12/24V	AC110V	DC5/12/24V	AC110V	DC12/24V	AC110V	AC220V	DC24V±10%
Load current	5 to 100mA	5 to 20mA (*2)			100mA or less		50mA or less		5 to 50mA	7 to 20mA	50mA or less	20mA or less	5 to 50mA	7 to 20mA	7 to 10mA	5 to 20mA
Indicator lamp	LED (Lit when ON)	LED (Lit when ON)	Red/green LED (Lit when ON)	Red/green LED (Lit when ON)	LED (Lit when ON)	Yellow LED (Lit when ON)	Red/green LED (Lit when ON)	Red/green LED (Lit when ON)	LED (Lit when ON)		Without indicator lamp		LED (Lit when ON)			Red/green LED (Lit when ON)
Leakage current	1 mA or less with 100 VAC 2 mA or less with 200 VAC	1mA or less			10μA or less				0mA							1mA or less
Weight g	1m:33 3m:87 5m:142	1m:18 3m:49 5m:80	1m:33 3m:87 5m:142	1m:18 3m:49 5m:80	1m:18 3m:49 5m:80		1m:33 3m:87 5m:142	1m:18 3m:49 5m:80	1m:18 3m:49 5m:80				1m:33 3m:87 5m:142			1m:61 3m:166 5m:272

*1: Refer to page 309 for detailed switch specifications, dimensions, etc.
*2: Max. load current: 20mA at 25°C.The current is lower than 25 mA if the operating ambient temperature around the switch is higher than 20˚C. (60 to 5 mA at 10°C)
*3: AC magnetic field switches (T2YD and T2YDT) cannot be used in a DC magnetic field environment.

Theoretical thrust table

(Unit: N)

Bore size (mm)	Operating direction	Working pressure MPa									
		0.15	0.2	0.3	0.4	0.5	0.6	0.7	0.8	0.9	1.0
ø20	Push	-	62.8	94.2	1.26×10^2	1.57×10^2	1.88×10^2	2.20×10^2	2.51×10^2	2.83×10^2	3.14×10^2
	Pull	-	52.8	79.2	1.06×10^2	1.32×10^2	1.58×10^2	1.85×10^2	2.11×10^2	2.38×10^2	2.64×10^2
ø25	Push	-	98.2	1.47×10^2	1.96×10^2	2.45×10^2	2.95×10^2	3.44×10^2	3.93×10^2	4.42×10^2	4.91×10^2
	Pull	-	82.5	1.24×10^2	1.65×10^2	2.06×10^2	2.47×10^2	2.89×10^2	3.30×10^2	3.71×10^2	4.12×10^2
ø32	Push	-	1.61×10^2	2.41×10^2	3.22×10^2	4.02×10^2	4.83×10^2	5.63×10^2	6.43×10^2	7.24×10^2	8.04×10^2
	Pull	-	1.38×10^2	2.07×10^2	2.76×10^2	3.46×10^2	4.15×10^2	4.84×10^2	5.53×10^2	6.22×10^2	6.91×10^2
ø40	Push	-	2.51×10^2	3.77×10^2	5.03×10^2	6.28×10^2	7.54×10^2	8.80×10^2	1.01×10^3	1.13×10^3	1.26×10^3
	Pull	-	2.11×10^2	3.17×10^2	4.22×10^2	5.28×10^2	6.33×10^2	7.39×10^2	8.44×10^2	9.50×10^2	1.06×10^3
ø50	Push	2.95×10^2	3.93×10^2	5.89×10^2	7.85×10^2	9.82×10^2	1.18×10^3	1.37×10^3	1.57×10^3	1.77×10^3	1.96×10^3
	Pull	2.47×10^2	3.30×10^2	4.95×10^2	6.60×10^2	8.25×10^2	9.90×10^2	1.15×10^3	1.32×10^3	1.48×10^3	1.65×10^3
ø63	Push	4.68×10^2	6.23×10^2	9.35×10^2	1.25×10^3	1.56×10^3	1.87×10^3	2.18×10^3	2.49×10^3	2.81×10^3	3.12×10^3
	Pull	4.20×10^2	5.61×10^2	8.41×10^2	1.12×10^3	1.40×10^3	1.68×10^3	1.96×10^3	2.24×10^3	2.52×10^3	2.80×10^3
ø80	Push	7.54×10^2	1.01×10^3	1.51×10^3	2.01×10^3	2.51×10^3	3.02×10^3	3.52×10^3	4.02×10^3	4.52×10^3	5.03×10^3
	Pull	6.80×10^2	9.07×10^2	1.36×10^3	1.81×10^3	2.27×10^3	2.72×10^3	3.17×10^3	3.63×10^3	4.08×10^3	4.54×10^3
ø100	Push	1.18×10^3	1.57×10^3	2.36×10^3	3.14×10^3	3.93×10^3	4.71×10^3	5.50×10^3	6.28×10^3	7.07×10^3	7.85×10^3
	Pull	1.07×10^3	1.43×10^3	2.14×10^3	2.86×10^3	3.57×10^3	4.29×10^3	5.00×10^3	5.72×10^3	6.43×10^3	7.15×10^3

⚠ Be sure to read the "safety precautions" 3. Position locking: **SCM-Q** (pages 44 through 46).

SCPD3
SCM
SSD2
MDC2
SMG
LCM
LCR
LCG
LCX
STM
STG
STR2
MRL2
GRC
Cylinder switch
MN3E MN4E
4GA/B
M4GA/B
MN4GA/B
F.R (module unit)
Clean F.R
Precision R
Press gauge Diff. press gauge
Electro-pneumatic R
Speed controller
Auxiliary valve
Fitting/ tube
Clean air unit
Pressure sensor
Flow rate sensor
Valve for air blow
Ending

How to order

Without switch (Magnet for switch incorporated)

SCM-Q - LB - 40 B - 100 - R ———— Q P7

With switch (Magnet for switch incorporated)

SCM-Q - LB - 40 B - 100 - R - T2H - D - ◯ Q P7

Ⓐ Mounting *1, *2

Ⓑ Bore size

Ⓒ Cushion

Ⓓ Stroke length

Ⓔ Position locking mechanism

Ⓕ Switch model No. *4 *5

Ⓖ Switch quantity

Ⓗ Switch mounting

Ⓘ Option *6

Ⓙ Clean room specifications *7

Code	Content
Ⓐ Mounting	
00	Basic
LB	Axial foot
FA	Rod end flange
FB	Head end flange

Ⓑ Bore size (mm)	
20	ø20
25	ø25
32	ø32
40	ø40
50	ø50
63	ø63
80	ø80
100	ø100

Ⓒ Cushion	
B	Both sides air cushioned
R	Rod end air cushioned
H	Head end air cushion

Ⓓ Stroke length (mm)

Bore size	Stroke length Note 3	Custom stroke length
ø20 to ø32	10 to 1000	By 1mm increments
ø40 to ø100	10 to 1500	

Ⓔ Position locking mechanism	
R	With rod end position locking
H	With head end position locking

Ⓕ Switch model No.

Lead wire straight	Lead wire L-shaped	Contact	Voltage AC	Voltage DC	Display	Leadwire
T0H*	T0V*	Reed	●	●	1-color display	2 wires
T5H*	T5V*	Reed	●	●	Without indicator lamp	2 wires
T8H*	T8V*	Reed	●	●	1-color display	2 wires
T1H*	T1V*	Proximity	●		1-color display	2 wires
T2H*	T2V*	Proximity		●	1-color display	2 wires
T3H*	T3V*	Proximity		●	1-color display	3 wires
T3PH*	T3PV*	Proximity		●	1-color display	3 wires
T2WH*	T2WV*	Proximity		●	2-color display	2 wires
T2YH*	T2YV*	Proximity		●	2-color display	2 wires
T3WH*	T3WV*	Proximity		●	2-color display	3 wires
T3YH*	T3YV*	Proximity		●	2-color display	3 wires
T2YD*	–	Proximity		●	2-color display for AC magnetic field	2 wires
T2YDT*	–	Proximity		●	2-color display for AC magnetic field	2 wires
T2JH*	T2JV*	Proximity		●	1-color display off-delay	2 wires

***Lead wire length**	
Blank	1m(standard))
3	3m(option)
5	5m(option)

Ⓖ Switch quantity	
R	1 (on rod end)
H	1 (on rod end)
D	2
T	3
4	4 (indicate switch quantity for more than 4 switches.)

Ⓗ Switch mounting	
Blank	Rail
Z	Band

Ⓘ Option	
Q	Switch rail attached at shipment

Ⓙ Clean room specifications

	Structure	Material restriction
P7	Exhaust treatment	–
P71	Vacuum treatment	–
P5	Exhaust treatment	Copper-based/silicon-based/halogen-based materials (fluorine, chlorine, bromine) are prohibited
P51	Vacuum treatment	Copper-based/silicon-based/halogen-based materials (fluorine, chlorine, bromine) are prohibited

⚠ Precautions for model No. selection

*1: Mounting brackets are shipped with the product.
*2: When the mounting is LB, the cylinder cannot be mounted on the frame if a bracket is already attached to the cylinder. Refer to Safety precautions for details.
*3: Refer to page 34 for the number of installed switches and the minimum stroke length.
*4: Switches other than Ⓕ switch model No. are also available. (custom order)
For details, refer to page 309.
*5: T8H/V switches cannot be mounted when the bore size is from ø20 to ø40 and the switch mounting is the rail.
*6: "Q" (switch rail attached at shipment) is not available for the "Z" switch mounting.
*7: "P5" and "P51" are custom order products.
*8: Mounting 00 does not allow front mounting.
*9: Switches are shipped with the product. Contact CKD when shipment must be assembled.

[Example of model No.]

SCM-Q-LB-40B-100-R-T2H-D-QP7

Model: Round shaped cylinder, position locking

Ⓐ Mounting	: Axial foot
Ⓑ Bore size	: ø40mm
Ⓒ Cushion	: Air cushion on both sides
Ⓓ Stroke length	: 100mm
Ⓔ Position locking mechanism	: With rod end position locking
Ⓕ Switch model No.	: Proximity T2H switch, lead wire 1 m
Ⓖ Switch quantity	: 2
Ⓗ Switch mounting	: Rail
Ⓘ Option	: Switch rail attached at shipment
Ⓙ Clean room specifications	: Exhaust treatment

Operational explanation

● When locked
When the piston (1) of the cylinder moves toward the stroke end, the stopper pin (3) is pushed up along the slope of the sleeve (2).

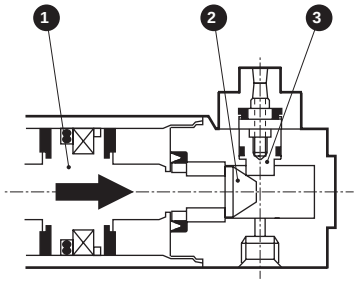

When the piston of the cylinder comes to the stroke end and the sleeve groove Ⓐ reaches the stopper piston position, the stopper piston is pushed down by the spring 4 and fits into the groove, completing the lock action.

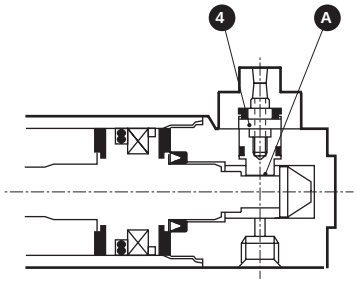

● When unlocked
When pressure is supplied to the port, the stopper piston pushes up the spring and slips out of the sleeve groove, releasing the lock.

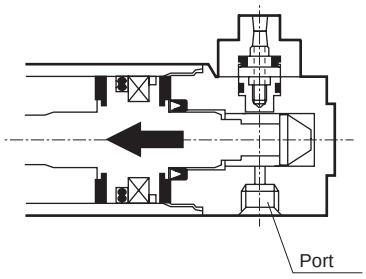

SCPD3
SCM
SSD2
MDC2
SMG
LCM
LCR
LCG
LCX
STM
STG
STR2
MRL2
GRC
Cylinder switch
MN3E MN4E
4GA/B
M4GA/B
MN4GA/B
F.R (module unit)
Clean F.R
Precision R
Press gauge Diff. press gauge
Electro-pneumatic R
Speed controller
Auxiliary valve
Fitting/ tube
Clean air unit
Pressure sensor
Flow rate sensor
Valve for air blow
Ending

Dimensions (ø20 to ø32)

● Basic (00) with rod end position locking (R)

• Switch mounting: Rail

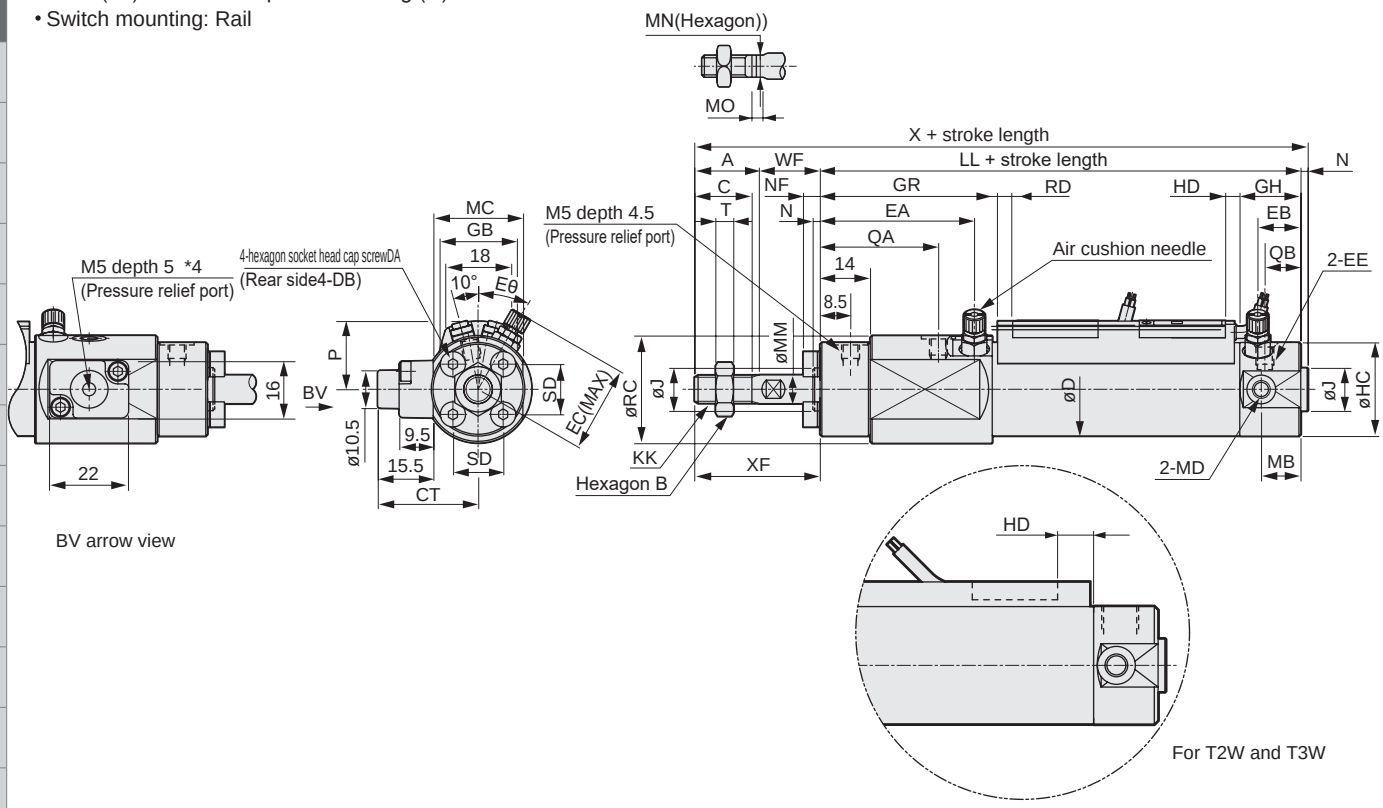

• Switch mounting: Band

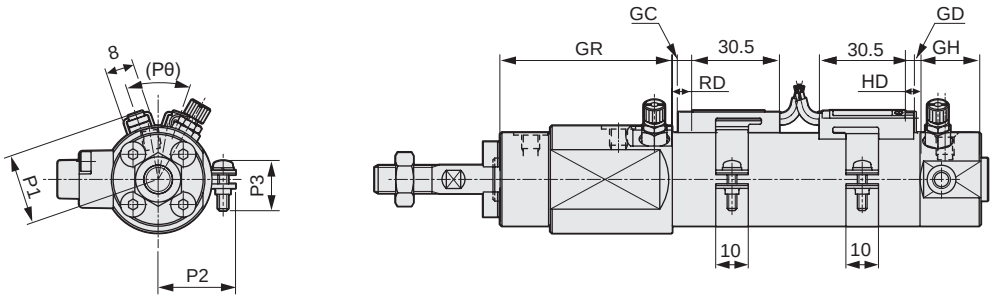

*1: For the mounting of LB, the cylinder with a bracket attached cannot be installed on the frame. Refer to Safety precautions for details.
2: Refer to page 42 and 43 for dimensions of HD and RD of T2Y, T3Y, T8, and T1.
3: Refer to page 42 and 43 for dimensions of projections of T2Y, T3Y, T8, and T1.
*4: Do not perform vacuum treatment of the relief port of the positioning lock. Refer to Safety precautions for details.

Code	Basic (00) basic dimensions															
Bore size(mm)	A	B	C	D	CT	DA	DB	EC	EE	Eθ	J	KK	LL	MC	MD	MM
ø20	18	13	15.5	26	28	M4×20	M4 depth 6.5	29	M5	30°	12	M8	98	25	M5	8
ø25	22	17	19.5	31	31	M5×20	M5 depth 6.5	31.5	M5	30°	14	M10×1.25	98	31	M6	10
ø32	22	17	19.5	38	31.5	M5×20	M5 depth 7.5	32.8	Rc1/8	25°	18	M10×1.25	100	32	M8	12

Code										Rod end position locking						
Bore size(mm)	MO	MN	N	NF	SD	T	WF	X	XF	MB	RC	HC	QA	QB	EA	EB
ø20	4	6	2	4.5	14	5	17	135	35	11	30	26	33	10	43	12
ø25	5	8	2	5.6	16.5	6	18	140	40	11	35	31	33	10	43	12
ø32	5.5	10	2	5.6	20	6	18	142	40	10	38	38	33	10	43	12

Code	With switch																										
	GH	GR	Rail mounting								Band mounting																
			P	GB	HD			RD			P1	P2	P3	(Pθ)	GC			GD			HD			RD		
Bore size(mm)					T0,T5	T2,T3	T2W T3W	T0,T5	T2,T3	T2W T3W					T0,T5	T2,T3	T2W T3W	T0,T5	T2,T3	T2W T3W	T0,T5	T2,T3	T2W T3W	T0,T5	T2,T3	T2W T3W
ø20	17	48	19.5	23	3.0	6.5	8.5	7.5	7.5	9.5	19.6	21.5	14	38°	3.5	3.5	5.5	2.5	2.5	4.5	6.5	6.5	8.5	7.5	7.5	9.5
ø25	17	48	22	24.4	2.0	5.5	7.5	8.5	8.5	10.5	22.1	23.9	14	34°	4.5	4.5	6.5	1.5	1.5	3.5	5.5	5.5	7.5	8.5	8.5	10.5
ø32	17	48	25.5	25	3.0	6.5	8.5	9.5	9.5	11.5	25.6	27.6	16	30°	5.5	5.5	7.5	2.5	2.5	4.5	6.5	6.5	8.5	9.5	9.5	11.5

*1: Mounting dimensions of the mounting types are the same as those of SCM (double acting). Refer to pages 31 and 33.

Dimensions (ø20 to ø32)

● Basic (00) with head end position locking (H)
• Switch mounting: Rail

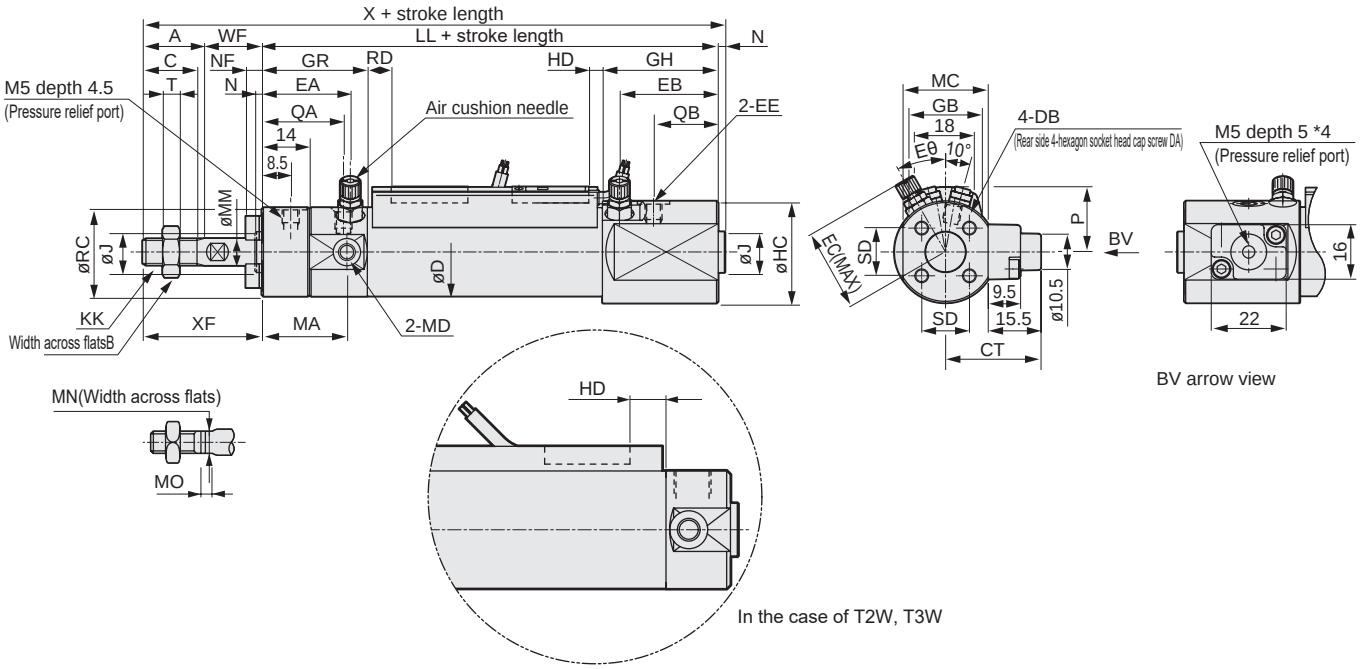

• Switch mounting: Band

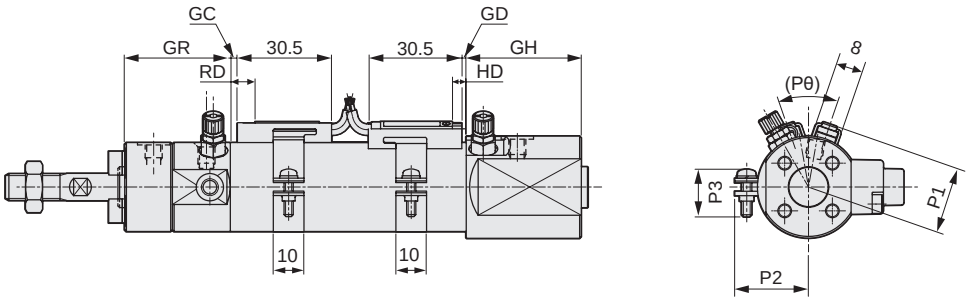

*1: For the mounting of LB, the cylinder with a bracket attached cannot be installed on the frame. Refer to Safety precautions for details.
2: Refer to page 42 and 43 for dimensions of HD and RD of T2Y, T3Y, T8, and T1.
3: Refer to page 42 and 43 for dimensions of projections of T2Y, T3Y, T8, and T1.
*4: Do not perform vacuum treatment of the relief port of the positioning lock. Refer to Safety precautions for details.

Code	Basic (00) basic dimensions															
Bore size(mm)	A	B	C	D	CT	DA	DB	EC	EE	Eθ	J	KK	LL	MC	MD	MM
ø20	18	13	15.5	26	28	M4×20	M4 depth 6.5	29	M5	30°	12	M8	98	25	M5	8
ø25	22	17	19.5	31	31	M5×20	M5 depth 6.5	31.5	M5	30°	14	M10×1.25	98	31	M6	10
ø32	22	17	19.5	38	31.5	M5×20	M5 depth 7.5	32.8	Rc1/8	25°	18	M10×1.25	100	32	M8	12

Code										Head end position locking						
Bore size(mm)	MO	MN	N	NF	SD	T	WF	X	XF	MA	RC	HC	QA	QB	EA	EB
ø20	4	6	2	4.5	14	5	17	135	35	25	26	30	26	17	28	27
ø25	5	8	2	5.6	16.5	6	18	140	40	25	31	35	26	17	28	27
ø32	5.5	10	2	5.6	20	6	18	142	40	25	38	38	26	17	28	27

Code	With switch																									
	GH	GR	Rail mounting								Band mounting															
			P	GB	HD			RD			P1	P2	P3	(Pθ)	GC			GD			HD			RD		
Bore size(mm)					T0,T5	T2,T3	T2W T3W	T0,T5	T2,T3	T2W T3W					T0,T5	T2,T3	T2W T3W	T0,T5	T2,T3	T2W T3W	T0,T5	T2,T3	T2W T3W	T0,T5	T2,T3	T2W T3W
ø20	32	33	19.5	23	3.0	6.5	8.5	7.5	7.5	9.5	19.6	21.5	14	38°	3.5	3.5	5.5	2.5	2.5	4.5	6.5	6.5	8.5	7.5	7.5	9.5
ø25	32	33	22	24.4	2.0	5.5	7.5	8.5	8.5	10.5	22.1	23.9	14	34°	4.5	4.5	6.5	1.5	1.5	3.5	5.5	5.5	7.5	8.5	8.5	10.5
ø32	32	33	25.5	25	3.0	6.5	8.5	9.5	9.5	11.5	25.6	27.6	16	30°	5.5	5.5	7.5	2.5	2.5	4.5	6.5	6.5	8.5	9.5	9.5	11.5

*1: Mounting dimensions of the mounting types are the same as those of SCM (double acting). Refer to pages 31 and 33.

SCPD3
SCM
SSD2
MDC2
SMG
LCM
LCR
LCG
LCX
STM
STG
STR2
MRL2
GRC
Cylinder switch
MN3E MN4E
4GA/B
M4GA/B
MN4GA/B
F.R (module unit)
Clean F.R
Precision R
Press gauge Diff. press gauge
Electro-pneumatic R
Speed controller
Auxiliary valve
Fitting/ tube
Clean air unit
Pressure sensor
Flow rate sensor
Valve for air blow
Ending

Dimensions (ø40 to ø100)

● Basic (00) with head end position locking (H)

• Switch mounting: Rail

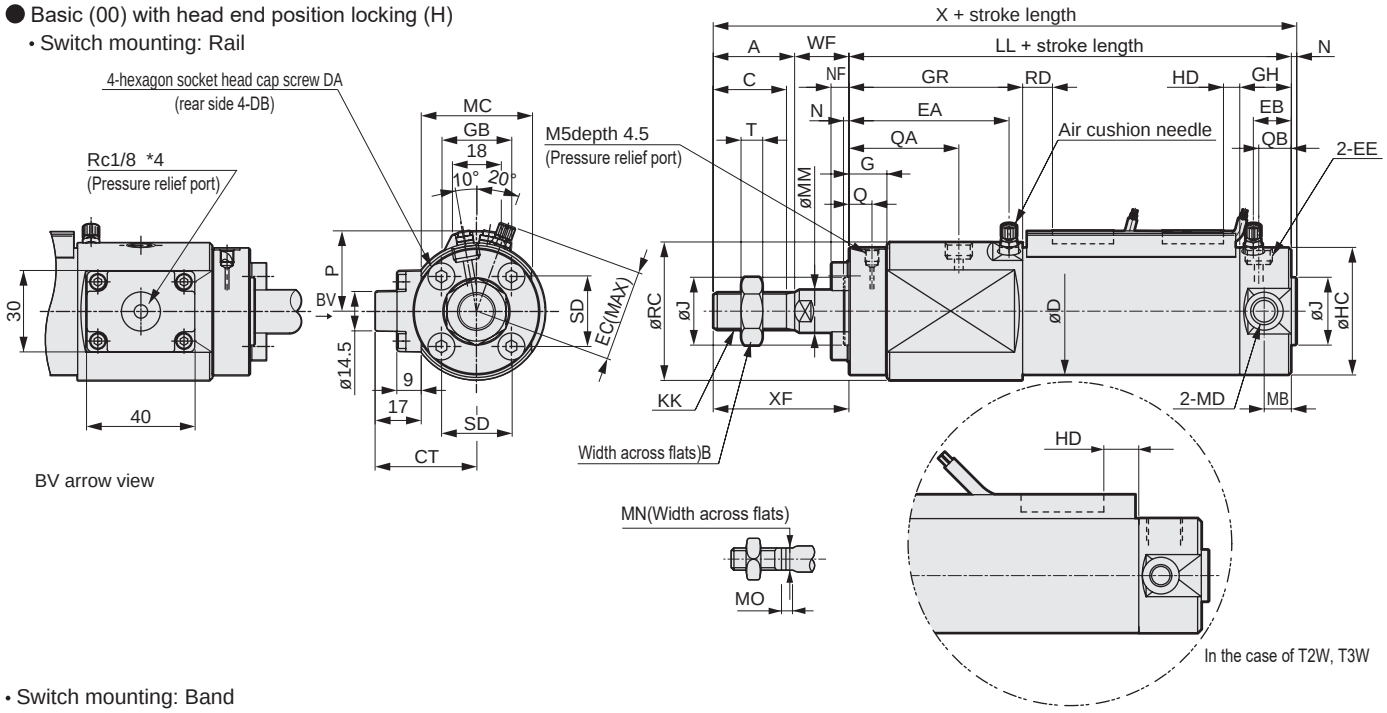

• Switch mounting: Band

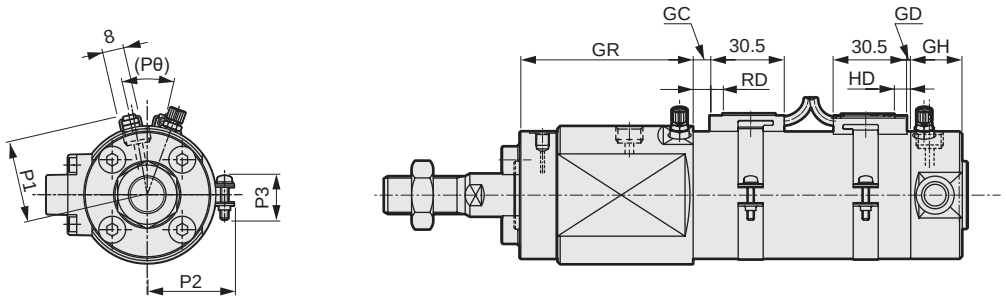

*1: For the mounting of LB, the cylinder with a bracket attached cannot be installed on the frame. Refer to Safety precautions for details.
2: Refer to page 42 and 43 for dimensions of HD and RD of T2Y, T3Y, T8, and T1.
3: Refer to page 42 and 43 for dimensions of projections of T2Y, T3Y, T8, and T1.
*4: Do not perform vacuum treatment of the relief port of the positioning lock. Refer to Safety precautions for details.

Code	Basic (00) basic dimensions														
Bore size(mm)	A	B	C	D	CT	DA	DB	EC	EE	J	KK	LL	MB	MC	MD
ø40	30	22	27	47	37.5	M6×25	M6depth 12	38.6	Rc1/8	25	M14×1.5	122	10	41	M10
ø50	35	27	32	58	43.5	M8×25	M8depth 16	44.5	Rc1/4	30	M18×1.5	134	12	53	M12
ø63	35	27	32	72	49.5	M10×30	M10depth 16	50	Rc1/4	32	M18×1.5	134	12	65	M14
ø80	40	32	37	89	57.5	M10×30	M10depth 22	58.5	Rc3/8	40	M22×1.5	153	–	81	–
ø100	40	41	37	110	68.5	M12×30	M12depth 22	69	Rc1/2	50	M26×1.5	154	–	103	–

Code													Rod end position locking					
Bore size(mm)	MM	MO	MN	N	SD	T	WF	X	XF	NF	Q	G	QA	QB	RC	HC	EA	EB
ø40	16	6	14	2	26	8	20	174	50	6.6	8.5	14	40.5	12	51	47	59	14
ø50	20	8	17	2	32	11	23	194	58	8.9	8.5	14	44	12	61	58	62.5	15.5
ø63	20	8	17	2	38	11	23	194	58	11.1	8.5	14	44	12	72	72	62.5	15.5
ø80	25	11	22	3	50	13	31	227	71	11.1	9	15	46.5	15	89	89	65	20
ø100	30	13	27	3	60	16	31	228	71	13.2	10	16	47.5	15	110	110	66	20

Code	With switch																										
	GH	GR	Rail mounting								Band mounting																
			P	GB	HD			RD			P1	P2	P3	(Pθ)	GC			GD			HD			RD		
Bore size(mm)					T0,T5	T2,T3	T2W T3W	T0,T5	T2,T3	T2W T3W					T0,T5	T2,T3	T2W T3W	T0,T5	T2,T3	T2W T3W	T0,T5	T2,T3	T2W T3W	T0,T5	T2,T3	T2W T3W
ø40	19	64	30	25.7	5.0	8.5	10.5	11.5	11.5	13.5	30.2	32.1	16	26°	7.5	7.5	9.5	4.5	4.5	6.5	8.5	8.5	10.5	11.5	11.5	13.5
ø50	22	69	35.5	26.2	7.5	11.0	13.0	13.0	13.0	15.0	35.7	37.4	16	22°	9.0	9.0	11.0	7.0	7.0	9.0	11.0	11.0	13.0	13.0	13.0	15.0
ø63	22	69	42.5	26.5	7.5	11.0	13.0	13.0	13.0	15.0	42.7	44.4	16	20°	9.0	9.0	11.0	7.0	7.0	9.0	11.0	11.0	13.0	13.0	13.0	15.0
ø80	28	73	51	26.7	9.5	13.0	15.0	20.0	20.0	22.0	51.2	53.0	16	16°	16.0	16.0	18.0	9.0	9.0	11.0	13.0	13.0	15.0	20.0	20.0	22.0
ø100	28	74	61.5	26.7	10.0	13.5	15.5	19.5	19.5	21.5	61.7	63.5	16	16°	15.5	15.5	17.5	9.5	9.5	11.5	13.5	13.5	15.5	19.5	19.5	21.5

*1: Mounting dimensions of the mounting types are the same as those of SCM (double acting). Refer to pages 31 and 33.

Dimensions (ø40 to ø100)

● Basic (00) with head end position locking (H)

• Switch mounting: Rail

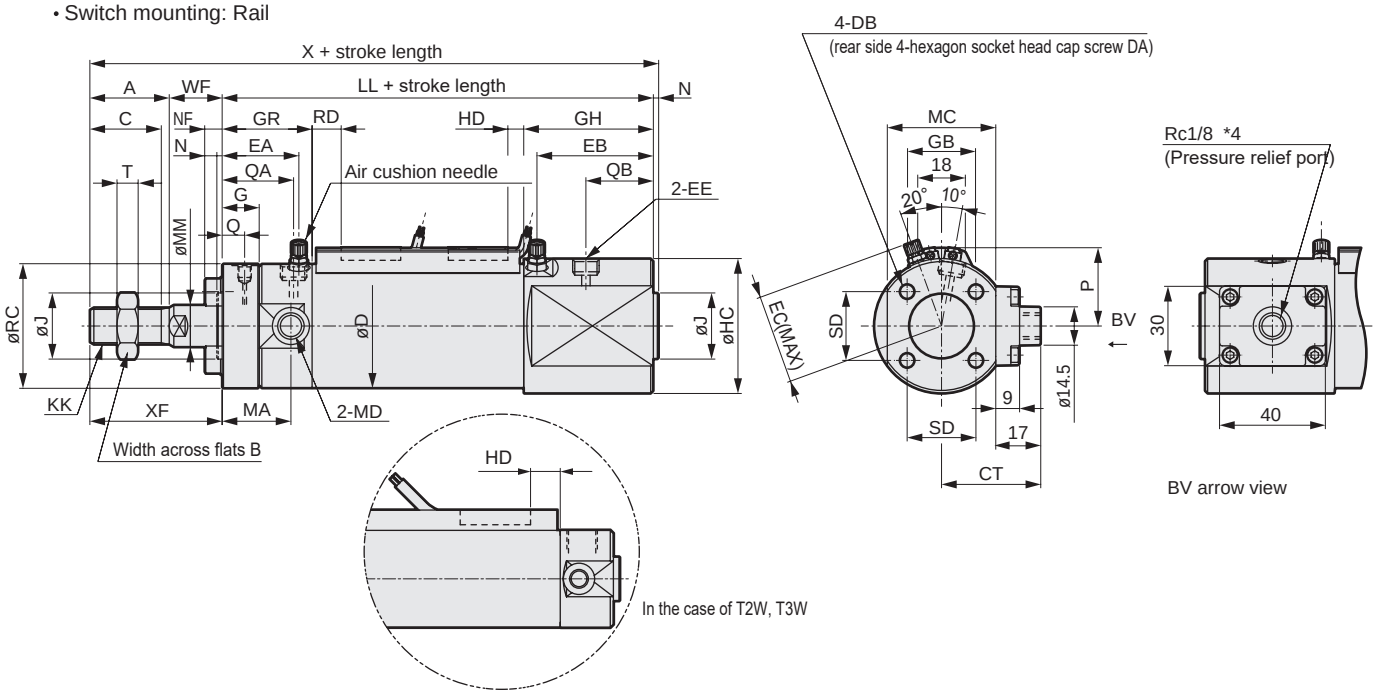

• Switch mounting: Band

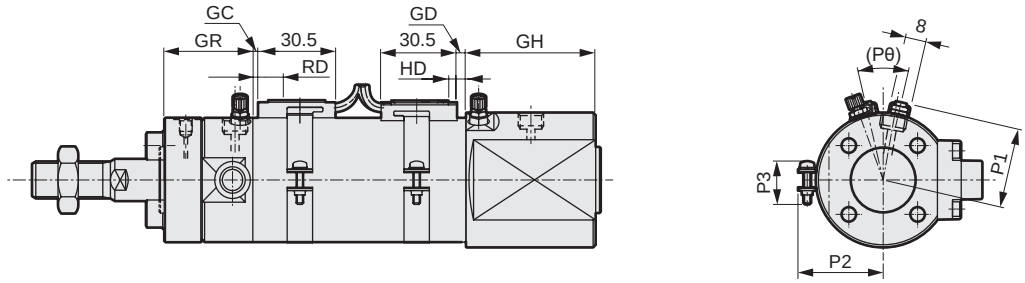

*1: For the mounting of LB, the cylinder with a bracket attached cannot be installed on the frame. Refer to Safety precautions for details.
2: Refer to page 42 and 43 for dimensions of HD and RD of T2Y, T3Y, T8, and T1.
3: Refer to page 42 and 43 for dimensions of projections of T2Y, T3Y, T8, and T1.
*4: Do not perform vacuum treatment of the relief port of the positioning lock. Refer to Safety precautions for details.

Code	Basic (00) basic dimensions														
Bore size(mm)	A	B	C	D	CT	DA	DB	EC	EE	J	KK	LL	MA	MC	MD
ø40	30	22	27	47	37.5	M6×25	M6depth 12	38.6	Rc1/8	25	M14×1.5	122	26	41	M10
ø50	35	27	32	58	43.5	M8×25	M8depth 16	44.5	Rc1/4	30	M18×1.5	134	27	53	M12
ø63	35	27	32	72	49.5	M10×30	M10depth 16	50	Rc1/4	32	M18×1.5	134	27	65	M14
ø80	40	32	37	89	57.5	M10×30	M10depth 22	58.5	Rc3/8	40	M22×1.5	153	–	81	–
ø100	40	41	37	110	68.5	M12×30	M12depth 22	69	Rc1/2	50	M26×1.5	154	–	103	–

Code													Head end position locking					
Bore size(mm)	MM	MO	MN	N	SD	T	WF	X	XF	NF	Q	G	QA	QB	RC	HC	EA	EB
ø40	16	6	14	2	26	8	20	174	50	6.6	8.5	14	27	25.5	47	51	29	44
ø50	20	8	17	2	32	11	23	194	58	8.9	8.5	14	29	27	58	61	32.5	45.5
ø63	20	8	17	2	38	11	23	194	58	11.1	8.5	14	29	27	72	72	32.5	45.5
ø80	25	11	22	3	50	13	31	227	71	11.1	9	15	30	315	89	89	35	50
ø100	30	13	27	3	60	16	31	228	71	13.2	10	16	31	31.5	110	110	36	50

Code	With switch																										
	GH	GR	Rail mounting								Band mounting																
			P	GB	HD			RD			P1	P2	P3	(Pθ)	GC			GD			HD			RD		
Bore size(mm)					T0,T5	T2,T3	T2W T3W	T0,T5	T2,T3	T2W T3W					T0,T5	T2,T3	T2W T3W	T0,T5	T2,T3	T2W T3W	T0,T5	T2,T3	T2W T3W	T0,T5	T2,T3	T2W T3W
ø40	49	34	30	25.7	5.0	8.5	10.5	11.5	11.5	13.5	30.2	32.1	16	26°	7.5	7.5	9.5	4.5	4.5	6.5	8.5	8.5	10.5	11.5	11.5	13.5
ø50	52	39	35.5	26.2	7.5	11.0	13.0	13.0	13.0	15.0	35.7	37.4	16	22°	9.0	9.0	11.0	7.0	7.0	9.0	11.0	11.0	13.0	13.0	13.0	15.0
ø63	52	39	42.5	26.5	7.5	11.0	13.0	13.0	13.0	15.0	42.7	44.4	16	20°	9.0	9.0	11.0	7.0	7.0	9.0	11.0	11.0	13.0	13.0	13.0	15.0
ø80	58	43	51	26.7	9.5	13.0	15.0	20.0	20.0	22.0	51.2	53.0	16	16°	16.0	16.0	18.0	9.0	9.0	11.0	13.0	13.0	15.0	20.0	20.0	22.0
ø100	58	44	61.5	26.7	10.0	13.5	15.5	19.5	19.5	21.5	61.7	63.5	16	16°	15.5	15.5	17.5	9.5	9.5	11.5	13.5	13.5	15.5	19.5	19.5	21.5

*1: Mounting dimensions of the mounting types are the same as those of SCM (double acting). Refer to pages 31 and 33.

SCPD3
SCM
SSD2
MDC2
SMG
LCM
LCR
LCG
LCX
STM
STG
STR2
MRL2
GRC
Cylinder switch
MN3E MN4E
4GA/B
M4GA/B
MN4GA/B
F.R (module unit)
Clean F.R
Precision R
Press gauge Diff. press gauge
Electro-pneumatic R
Speed controller
Auxiliary valve
Fitting/ tube
Clean air unit
Pressure sensor
Flow rate sensor
Valve for air blow
Ending

Switch rail installation position (rail installation position for stroke length of 10 mm and over and less than 25 mm with 1 switch)

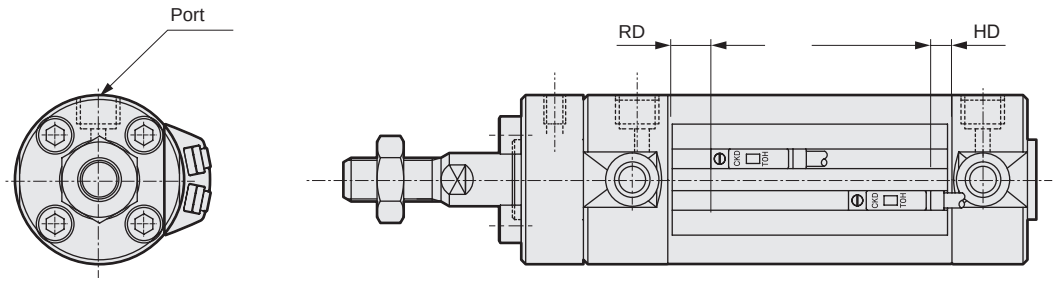

1. The switch rail is mounted at the position inclined by 90˚ from the standard position.
2. Dimensions for HD and RD are identical to the standard dimensions.

Switch mounting: Rail 2-color display AC magnetic field use, off-delay, T1H/V, T8H/V switch mounting, dimensions of projecting section

● SCM-* T2Y$^{H}/_{V}$, T3Y$^{H}/_{V}$, T2J$^{H}/_{V}$, T8$^{H}/_{V}$

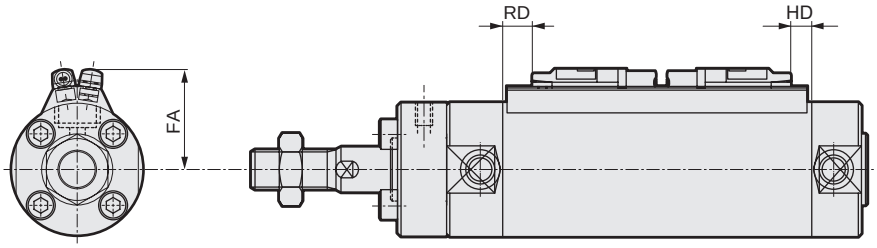

● SCM-* T2YD*, T1$^{H}/_{V}$

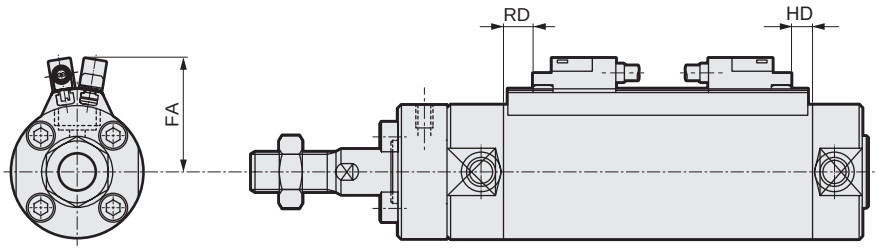

Bore size(mm)	FA				RD		HD	
	T*YH, T8H T2JH	T*YV, T8V T2JV	T2YD*, T1H	T1V	T*YH/V, T1H/V, T2JH/V, T2YD*	T8H/V	T*YH/V, T1H/V, T2JH/V, T2YD*	T8H/V
ø20	24	27	29.5	32.5	6.5	–	5.5	–
ø25	26.5	29.5	32	35	7.5	–	4.5	–
ø32	30	33	35.5	38.5	8.5	–	5.5	–
ø40	34.5	37.5	40	43	10.5	–	7.5	–
ø50	40	43	45.5	48.5	12	7	10	5
ø63	47	50	52.5	55.5	12	7	10	5
ø80	55.5	58.5	61	64	19	14	12	7
ø100	66	69	71.5	74.5	18.5	13.5	12.5	7.5

Switch mounting: Band 2-color display switch mounting, AC magnetic field use, off-delay, T1H/V, T8H/V dimensions of projecting section

● SCM-* T2Y$^{H}/_{V}$, T3Y$^{H}/_{V}$, T8$^{H}/_{V}$

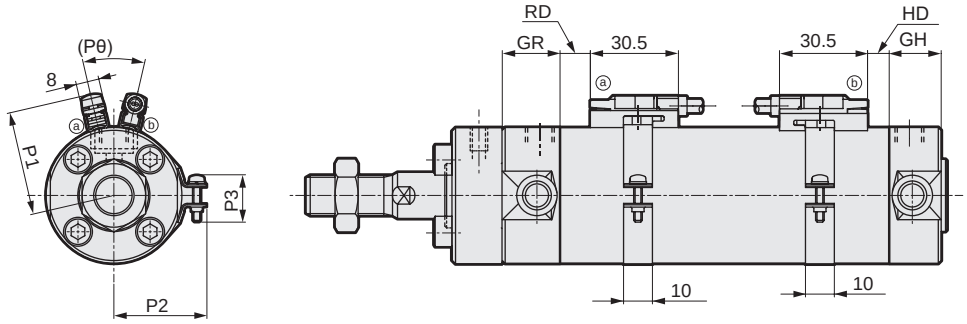

● SCM-* T2YD*, T1$^{H}/_{V}$

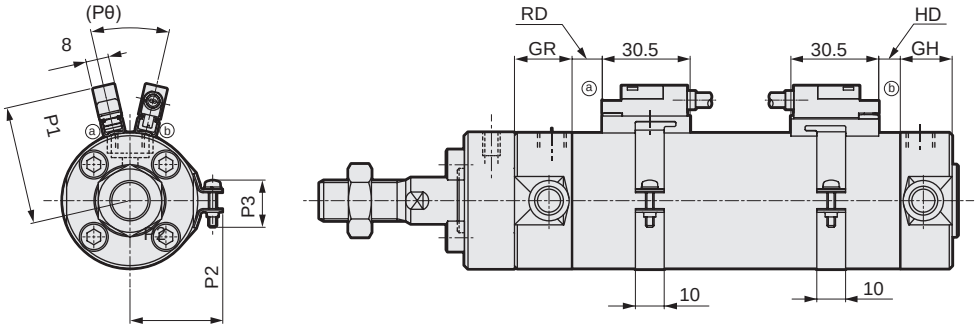

Bore size(mm)	P1				P2	P3	(P)	RD		HD	
	T*YH, T8H T2JH	T*YV, T8V T2JV	T2YD*, T1H	T1V				T*YH/V, T1H/V, T2JH/V, T2YD*	T8H/V	T*YH/V, T1H/V, T2JH/V, T2YD*	T8H/V
ø20	25.4	28.4	30.4	33.4	21.5	14.4	38°	6.5	1.5	5.5	0.5
ø25	27.9	30.9	32.9	35.9	23.9	14.4	34°	7.5	2.5	4.5	0
ø32	31.4	34.4	36.4	39.4	27.6	16.4	30°	8.5	3.5	5.5	0.5
ø40	36	39	41	44	32.1	16.4	26°	10.5	5.5	7.5	2.5
ø50	41.5	44.5	46.5	49.5	37.4	16.4	22°	12	7	10	5
ø63	48.5	51.5	53.5	56.5	44.4	16.4	20°	12	7	10	5
ø80	57	60	62	65	53.0	16.4	16°	19	14	12	7
ø100	67.5	70.5	72.5	75.5	63.5	16.4	16°	18.5	13.5	12.5	7.5

Safety Precautions

Always read this section before use.
Refer to page 2 for general information of the cylinder and to page 320 for general information of the cylinder switch.

Product-specific cautions: Round shaped cylinder SCM Series

Design & selection

1.Common

CAUTION

■ As a cushion mechanism integrated in the cylinder, the rubber cushion and the air cushion are available. The purpose of the air cushion is to absorb the piston's kinetic energy by using air compressibility, avoiding collisions of piston and cover at the stroke end. Thus, the cushion is not used to decelerate the piston speed (deceleration action) near the stroke end. The following table shows the kinetic energy that can be absorbed by the cushion. If the kinetic energy exceeds these values, or if bounding caused by the air compressibility is to be avoided, use a separate buffer.

Bore size (mm)	Rubber cushion	Air cushion	
	Allowable energy absorption J	Effective cushion length (mm)	Allowable absorbed energy J
ø20	0.1	8.1	0.8
ø25	0.2	8.1	1.2
ø32	0.5	8.6	2.5
ø40	0.9	8.6	3.7
ø50	1.6	13.4	8.0
ø63	1.6	13.4	14.4
ø80	3.3	15.4	25.4
ø100	5.8	15.4	45.6

Kinetic energy (J) =

$$\frac{1}{2} \times \text{Weight (kg)} \times (\text{Speed [m/s]})^2$$

Note: Calculating kinetic energy
Average cylinder speed is obtained with $Va = \frac{L}{T}$.

Va : Average speed (m/s)
L : Cylinder stroke length (m)
T : Operation time (s)

With respect to this, the cylinder speed just before rushing into the cushion can be obtained with the following simple formula.

$$Vm = \frac{L}{T} \times (1 + 1.5 \times \frac{\omega}{100})$$

Vm: Stroke end speed (m/s)
ω : Cylinder load factor (%)

Use this Vm value as speed to calculate kinetic energy.

2.Position locking SCM-Q

WARNING

■ If pressure is applied to the port Ⓐ when both ports are not pressurized and the piston is locked, the lock may not be released or the piston rod may suddenly pop out just after the lock is released. This can be extremely hazardous. To release the locking mechanism, be sure to supply pressure to port Ⓑ . Check that a load is not applied to the locking mechanism upon release.

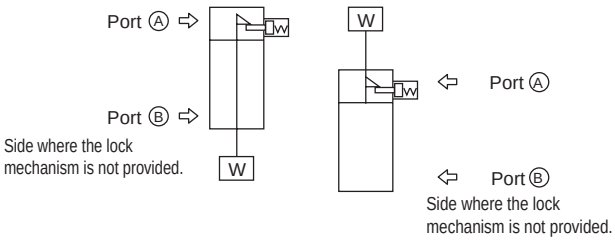

■ For usage where the drop rate is increased using the quick exhaust valve, the lock may not release normally because the cylinder body starts operating before the lock pin. For the position locking cylinder, do not use the quick exhaust valve.

■ Do not use 3-position valves.
Do not use the cylinder by combining with the 3-position (especially, closed center metal seal) valves. If the port at the side where the lock mechanism is provided is pressurized, the lock cannot be engaged. Even if it is locked once, the air leaked from the valve enters the cylinder, and the lock may be released after a certain period of time.

CAUTION

■ Cylinder load factor must be 50% or less.
If the load factor is high, the lock may not be released, or the lock section may be damaged.

■ If back pressure is applied to the locking mechanism, the lock may be released. Use a single valve, or an individual exhaust manifold.

■ Do not use multiple synchronized cylinders.
Do not use so that 1 workpiece is moved by synchronizing 2 or more position locking cylinders. Cylinder lock release may fail.

Mounting, installation & adjustment

1.Common

⚠CAUTION

■Switch rails are adhered with industrial adhesive tape. If used in an atmosphere containing inorganic or organic solvents or water vapor, rails may become loose. Main inorganic solvent/organic solvent

Inorganic solvents: Sodium hydroxide, hydrochloric acid, etc.
Organic solvents: Toluene, ethanol, hexane, gasoline, kerosene, etc.

■Remove all oil, moisture, dust, etc., from the body (tube) in order to adhere the switch rail.

(Perform adhesion by referring to instructions attached to the part.)

■Caution for air cushion

For ø20 and ø25, compatible fittings are limited, so see the following table to select the fitting.

Descriptions	Port diameter	Applicable fittings		Inapplicable fittings
ø20	M5	SC3W-M5-4・6-P7*		GWL6-M5
		SC3R-M5-P7*		
		GWS4-M5-P7*	GWS4-M5-S-P7*	
ø25		GWS6-M5-P7*	GWS6-M5-S-P7*	GWL6-M5-45
		GWL4-M5-P7*	GWL4-M5-45-P7*	
		GWL4-M5-T-P7*	GWL6-M5-T-P7*	

■Switch mounting: Caution for band

● When moving the switch position to the stroke length direction

The 1-color display switch can be fine-tuned by ±3 mm from the default. Loosen the switch fixing screw, shift the switch along the rail, then tighten at the specified position. If the adjusting range exceeds ±3 mm, or when finetuning the 2-color display switch, move the band position.
When using T2, T3, T0, or T5, use a flathead screwdriver (clockwork screwdriver, precision screwdriver, etc.) with a grip diameter of 5 to 6 mm, a 2.4 mm or smaller tip, and a thickness of 0.3 mm or less to tighten the screws with a tightening torque of 0.1 to 0.2 N·m.
When using T2J, T2Y, or T3Y, tighten the screw with a tightening torque of 0.5 to 0.7 N·m.
The switch bracket rail has a marking 4 mm from the rail end. Use as a guide to the mounting position when replacing the switch.
Switch rail markings are set to the default switch max. sensitivity position.
The max. sensitivity position will change when the switch is changed or when the band is shifted. Adjust the position accordingly in this case.

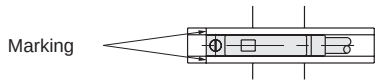

● If moving the switch position in the circumferential direction, loosen the band fixing screw, shift the switch rail in the circumferential direction, then tighten at the specified position.
Tightening torque is 0.6 to 0.8 N·m.

● Shifting the band position

Loosen the band fixing screw, shift the switch rail and band along the cylinder tube, and tighten the screw at the specified position. Tightening torque is 0.6 to 0.8 N·m.

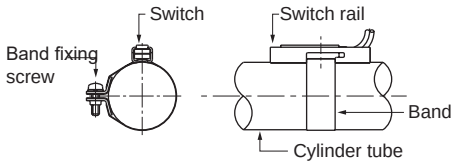

Position locking SCM-Q

⚠CAUTION

■For the axial foot (mounting style: LB), when trying to fix the cylinder to a support, etc., with the state that the mounting bracket is attached to the cylinder, the cylinder cannot be fixed because the bolt and the stopper cover will interfere with each other. Fix the mounting bracket at the position locking side to the support, etc., first, and then mount the cylinder.

■The lock mechanism functions at the stroke end, so that if the stopper is engaged during the stroke by the external stopper, the lock mechanism may not work and the piston could fall. When setting a load, make sure to check that the lock mechanism functions before installing the product.

■Supply pressure equal to or higher than the min. working pressure to the port on the lock mechanism side.

■When the piping at the side where the lock mechanism is provided is long and thin, or when the speed controller is far away from the cylinder port, note that it takes time to engage the lock. Clogging in the silencer mounted on the EXH port of the valve may cause the same result.

■Manual operation unlocking method

By screwing the bolt (ø20 to 32: M3X30 and over, ø40 to 100: M4X35 and over) into the stopper piston and pulling the bolt 2 mm (ø20 to 32) or 4 mm (ø40 to 100) with force of 20 N or more, the stopper piston is moved and the lock is released. When released, the stopper piston is returned to the original position by the built-in spring and engaged in the sleeve groove, and the cylinder is locked.

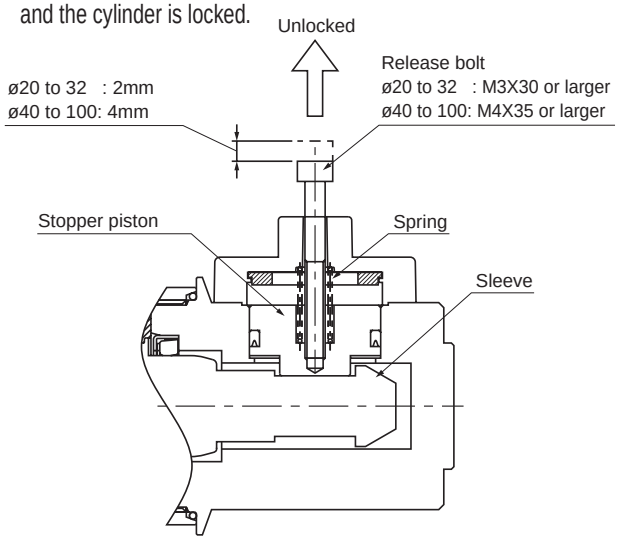

During use & maintenance

1.Position locking SCM-Q

⚠WARNING

■ For safety purposes, prevent the load from dropping under its own weight during maintenance.

■ In the case of the cylinder with air cushion, if the air cushion needle at the lock mechanism side is tightened excessively, the piston bounds at the stroke end and the sleeve and stopper piston collide strongly, which may result in damage to the locking mechanism. Also, if the air cushion needle is opened too much, the piston bounces off at the stroke end, which may similarly damage the mechanism. Adjust the needle of the air cushion so that there is no bound.

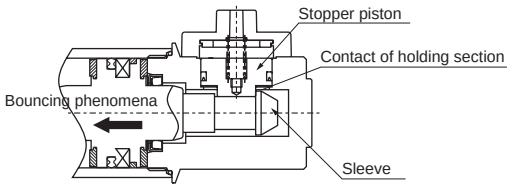

When stopping the piston with an external buffer device (shock absorber, etc.), adjust it similarly so that there is no bound.
Inspect the piston once or twice a year to make sure there is no damage to the retainer caused by this phenomenon.

⚠CAUTION

■ After the lock mechanism is manually operated, make sure to return the lock mechanism to the original state before use. Do not perform manual operation except for adjustment, as it is dangerous.

■ When mounting or adjusting the cylinder, release the lock.
If mounting work, etc., is done while the lock is engaged, the lock part may be damaged.

■ Use the speed controller with meter-out.
If the meter-in control is used, the lock may not be able to be released.

■ At the side where the lock mechanism is attached, be sure to use the cylinder from the stroke end.
If the cylinder piston does not reach the stroke end, the lock may not be engaged or the lock may not be able to be released.

■ If you perform vacuum treatment of the relief port equipped with the positioning lock mechanism, it will become disabled, which is very dangerous. Do not perform vacuum treatment of the port.

SSD2

Compact cylinder

ø12/ø16/ø20/ø25/ø32/ø40/ø50
ø63/ø80/ø100/ø125/ø140/ø160

Space saving structure

Overview

Space saving series with a wide range of stroke lengths and switch mounting surface options compared with conventional models.
A widely varied series of space-saving cylinders, suitable for everything from general environments to specific applications.

Features

Cylinder switch grooves are arranged on four surfaces

A cylinder switch can be mounted on the same surface as the piping port, which improves visibility and maintenance efficiency (ø20 to ø100).

End thread options

Rod ends can be selected from two options: female thread (standard) and male thread (optional).

T switch mountable

T switch used in many CKD products can be mounted on cylinders of all bore sizes. The use of a unified switch helps to reduce stock quantity.

CONTENTS

Series variation
Variation and option selection table 48
● **Double acting/single rod (SSD2) 50**
SSD2 Series with common switch dimensions 57
⚠ Safety precautions 58

Variation and option selection table

SSD2 (ø100 or smaller)

◎ : Option variation (check category 2)
○ : C5 compatible (check category 3)
△ : Available depending on conditions (estimation)
 : Not available

			Clean room specifications			
			Exhaust treatment	Vacuum treatment	Exhaust treatment	Vacuum treatment
		Code	P7	P71	P5	P51
Variation	Double acting basic	Blank	◎	◎	○	○
	High load	K	△	△	△	△
	Double acting double rod	D	△	△	△	△
	Back to back	B	○	○	○	○
	Two stage	W	△	△	△	△
	With position locking	Q	△	△	△	△
	Non-rotation	M	△	△	△	△
	Heat resistant (150°C)	T1	△	△		
	Fluoro rubber packing	T2	○	○	○	○
	Low speed	O	○	○	×	×
	With cylinder switch	L	◎	◎	○	○
	With cylinder switch (strong magnetic field proof)	L4	○	○	○	○
	With cylinder switch (heat resistance)	T1L	△	△		
	Fine speed	F	○	○		
Piping	NPT (ø32 to ø100)	N	○	○	○	○
	G (ø32 to ø100)	G	○	○	○	○
Option	Piston rod material stainless steel (including C ring)	M	(*1)	(*1)	(*1)	(*1)
	Male thread piston rod end	N	◎	◎	○	○
	Customized piston rod end form	N**	○	○	○	○
Accessory	Mounting bracket LB with bolts	LB	△	△	△	△
	Mounting bracket FA with bolts	FA	△	△	△	△
	Mounting bracket FB with bolts	FB	△	△	△	△

Caution
*1: When female thread of "P5", "P51", "P7" or "P71" is selected, the material for the piston rod and C ring is stainless steel.
The code "M" is not needed. If you need a stainless steel rod nut for male thread, combination with "M" is required.

SSD2 large bore size (ø125 to ø160)

◎ : Option variation (check category 2)
○ : C5 compatible (check category 3)
△ : Available depending on conditions (estimation)
 : Not available

			Clean room specifications			
			Exhaust treatment	Vacuum treatment	Exhaust treatment	Vacuum treatment
		Code	P7	P71	P5	P51
Variation	Double acting basic	Blank	◎	◎	○	○
	Double acting double rod	D	○	○	○	○
	With cylinder switch	L	◎	◎	○	○
Piping	NPT	N	○	○	○	○
	G	G	○	○	○	○
Option	Piston rod material stainless steel (including C ring)	M	(*1)	(*1)	(*1)	(*1)
	Male thread piston rod end	N	◎	◎	○	○
	Customized piston rod end form	N**	○	○	○	○

Caution
*1: When female thread of "P5", "P51", "P7" or "P71" is selected, the material for the piston rod and C ring is stainless steel.
The code "M" is not needed. If you need a stainless steel rod nut for male thread, combination with "M" is required.

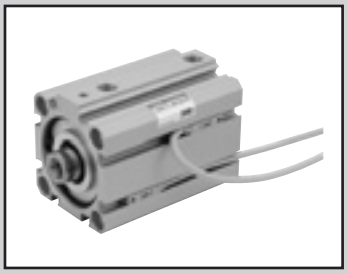

Compact cylinder Double acting/single rod

SSD2 Series

● Bore size: ø12/ø16/ø20/ø25/ø32/ø40/ø50/ø63/ø80/ø100/ø125/ø140/ø160

JIS symbol

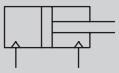

RoHS

Structure and material restriction

	Structure	Material restriction	Model No.		Structure	Material restriction			Model No.
P7 Series	Exhaust treatment	-	P7	P5 Series (custom order product)	Exhaust treatment	Copper-based materials prohibited	Silicon-based materials prohibited	Halogen-based materials prohibited (fluorine, chlorine, bromine)	P5
	Vacuum treatment	-	P71		Vacuum treatment	Copper-based materials prohibited	Silicon-based materials prohibited	Halogen-based materials prohibited (fluorine, chlorine, bromine)	P51

Specifications

Descriptions	SSD2-P7*/P5* SSD2-L-P7*/P5* (with switch)												
Bore size mm	ø12	ø16	ø20	ø25	ø32	ø40	ø50	ø63	ø80	ø100	ø125	ø140	ø160
Actuation	Double acting												
Working fluid	Compressed air												
Max. working pressure MPa	1.0												
Min. working pressure MPa	0.15							0.1					
Proof pressure MPa	1.6												
Ambient temperature °C	-10 to 60 (no freezing)												
Port size	M5				Rc1/8 *1		Rc1/4		Rc3/8				
Port size (relief port)	M5										Rc3/8		
Stroke tolerance mm	+1.0 0										+2.0 0		
Working piston speed mm/s	50 to 500							50 to 300					
Cushion	None										Rubber cushion		
Lubrication	Not available												
Allowable energy absorption J	0.004	0.01	0.016	0.021	0.025	0.092	0.1	0.12	0.27	0.56	6.52	6.52	7.78

*1: The port size of 5 mm stroke length of ø32 without switch is M5.

Stroke length

Bore size (mm)	Standard stroke length (mm)	Max. stroke length (mm)	Min. stroke length (mm)
ø12	5/10/15/20 25/30	30	1 (5) The value in ( ) is for types with one or two switches.
ø16			
ø20	5/10/15/20/25 30/35/40/45/50	50	
ø25			
ø32	5/10/15/20/25/30 35/40/45/50/75/100	100	
ø40			
ø50	10/15/20 25/30/35 40/45/50 75/100		
ø63			
ø80			
ø100			
ø125	10/20/30/40/50 75/100/125/150 175/200/250/300	300	
ø140			
ø160			

1: We cannot manufacture switches with 1-color display less than 5 mm, or switches with 2-color display, off-delay type, T1, T8* less than 10 mm.

Custom stroke length

● SSD2-P7*, P5* Series

Descriptions	Standard products Standard stroke length body with spacer	
Model No.	Refer to how to order.	
Content	A spacer is added to the standard stroke length body to adjust the stroke length in 1 mm increments.	
Stroke range	Bore size	Stroke range
	12/16	1 to 29
	20 to 25	1 to 49
	32 to 100	1 to 99
	125 to 160	1 to 299
Example of model No.	Model No.: SSD2-32-38-P7 A +2 mm spacer is added to the SSD2-32-40-P7 standard cylinder to create 38 mm stroke length. B + stroke length is 73mm.	

*1 Custom stroke length is available in 1 mm increments.
*2 Total length dimension for intermediate strokes of ø125 to ø160 is handled as intermediate stroke with dedicated length.

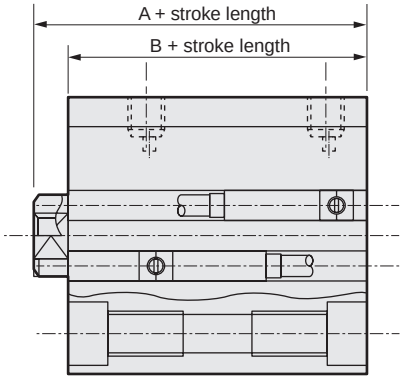

Switch specifications (F switch)

● 1-color/2-color display

Descriptions	Proximity 2-wire	Proximity 3-wire	Proximity 2-wire		Proximity 3-wire		
	F2S	F3S	F2H/F2V	F2YH/F2YV	F3H/F3V	F3PH/F3PV (custom order)	F3YH/F3YV
Applications	Programmable controller	Programmable controller, relay	Programmable controller		Programmable controller, relay		
Output method	-	NPN output	-		NPN output	PNP output	NPN output
Power supply voltage	-	10 to 28 VDC	-		10 to 28 VDC	4.5 to 28 VDC	10 to 28 VDC
Load voltage	10 to 30 VDC	30 VDC or less	10 to 30 VDC	24 VDC ±10%	30 VDC or less		
Load current	5 to 20 mA	50 mA or less	5 to 20 mA		100 mA or less	50 mA or less	
Indicator lamp	Red LED (Lit when ON)		LED (Lit when ON)	Red/green LED (Lit when ON)	LED (Lit when ON)	Yellow LED (Lit when ON)	Red/green LED (Lit when ON)
Leakage current	1 mA or less	10 μA or less	1 mA or less		10 μA or less		
Weight g	1 m: 10 3 m: 29						

Switch specifications (T switch)

● 1-color/2-color display/for AC magnetic field

Descriptions	Proximity 2-wire				Proximity 3-wire				Reed 2-wire							Proximity 2-wire
	T1H/T1V	T2H/T2V/ T2JH/T2JV	T2YH/T2YV	T2WH/T2WV	T3H/T3V	T3PH/ T3PV	T3YH/T3YV	T3WH/T3WV	T0H/T0V		T5H/T5V		T8H/T8V			T2YD(*3) T2YDT
Applications	Programmable controller relay, small solenoid valve	Programmable controller			Programmable controller, relay				Programmable controller, relay		Programmable controller, relay IC circuit (without indicator lamp), serial connection		Programmable controller, relay			Programmable controller
Output method	-				NPN output	PNP output	NPN output	NPN output	-							
Power supply voltage	-				10 to 28 VDC				-							
Load voltage	85 to 265 VAC	10 to 30 VDC		24 VDC ±10%	30 VDC or less				12/24 VDC	100/110 VAC	5/12/24 VDC	100/110 VAC	12/24 VDC	110 VAC	220 VAC	24 VDC ±10%
Load current	5 to 100 mA	5 to 20 mA (*2)			100 mA or less		50 mA or less		5 to 50 mA	7 to 20 mA	50 mA or less	20 mA or less	5 to 50 mA	7 to 20 mA	7 to 10 mA	5 to 20 mA
Indicator lamp	LED (Lit when ON)		Red/green LED (Lit when ON)		LED (Lit when ON)	Yellow LED (Lit when ON)	Red/green LED (Lit when ON)		LED (Lit when ON)		Without indicator lamp		LED (Lit when ON)			Red/green LED (Lit when ON)
Leakage current	1 mA or less with 100 VAC, 2 mA or less with 200 VAC	1 mA or less			10 μA or less				0 mA							1 mA or less
Weight g	1 m: 33 3 m: 87 5 m: 142	1 m: 18 3 m: 49 5 m: 80	1 m: 33 3 m: 87 5 m: 142	1 m: 18 3 m: 49 5 m: 80	1 m: 18 3 m: 49 5 m: 80		1 m: 33 3 m: 87 5 m: 142	1 m: 18 3 m: 49 5 m: 80	1 m: 18 3 m: 49 5 m: 80				1 m: 33 3 m: 87 5 m: 142			1 m: 61 3 m: 166 5 m: 272

*1: Refer to page 309 for detailed switch specifications and dimensions.
*2: Max. load current: 20mA at 25°C.The current is lower than 25 mA if the operating ambient temperature around the switch is higher than 20˚C. (60 to 5 mA at 10°C)
*3: Switch for AC magnetic field (T2YD/T2YDT) cannot be used in DC magnetic field.
*4: The F type switch uses a bend-resistant lead wire.

Cylinder weight table (The weight with switch includes weight of two cylinder switches)

● ø12 to ø100 (Unit: g)

Stroke length (mm)	5		10		15		20		25		30		35		40		45		50		75		100	
Bore size (mm)	No switch	With switch	No switch	With switch	No switch	With switch	No switch	With switch	No switch	With switch	No switch	With switch	No switch	With switch	No switch	With switch	No switch	With switch	No switch	With switch	No switch	With switch	No switch	With switch
ø12	66	107	74	116	83	125	91	133	100	142	108	150	-	-	-	-	-	-	-	-	-	-	-	-
ø16	92	138	103	148	113	158	124	169	135	180	146	191	-	-	-	-	-	-	-	-	-	-	-	-
ø20	130	185	142	217	155	230	168	243	180	255	193	268	206	281	219	294	232	307	245	320	-	-	-	-
ø25	181	272	196	287	212	303	228	319	244	335	259	350	275	366	291	382	307	398	322	413	-	-	-	-
ø32	254	368	276	390	298	412	320	434	341	455	363	477	385	499	407	521	429	543	450	564	558	672	665	779
ø40	373	516	400	543	426	569	453	596	480	623	506	649	533	676	559	702	586	729	612	755	745	888	877	1020
ø50	-	-	691	885	733	927	775	969	817	1011	860	1054	902	1096	944	1138	986	1180	1028	1222	1238	1432	1448	1642
ø63	-	-	939	1218	994	1273	1049	1328	1104	1383	1159	1438	1215	1494	1270	1549	1325	1604	1380	1659	1655	1934	1930	2209
ø80	-	-	1911	2324	1998	2411	2084	2497	2171	2584	2257	2670	2344	2757	2431	2844	2518	2931	2604	3017	3037	3450	3469	3882
ø100	-	-	2625	3192	2739	3306	2852	3419	2966	3533	3080	3647	3194	3761	3307	3874	3421	3988	3535	4102	4105	4672	4675	5242

● ø125 to ø160 (Unit: kg)

Stroke length (mm)	10		20		30		40		50		75		100		125		150		175		200		250		300	
Bore size (mm)	No switch	With switch	No switch	With switch	No switch	With switch	No switch	With switch	No switch	With switch	No switch	With switch	No switch	With switch	No switch	With switch	No switch	With switch	No switch	With switch	No switch	With switch	No switch	With switch	No switch	With switch
ø125	6.12	6.22	6.39	6.49	6.65	6.75	6.92	7.02	7.18	7.28	7.90	8.25	8.51	8.61	9.18	9.28	9.84	9.94	10.51	10.61	11.17	11.27	12.50	12.60	13.83	13.93
ø140	8.50	8.61	8.80	8.91	9.11	9.22	9.41	9.52	9.72	9.83	10.54	10.94	11.24	11.35	12.00	12.11	12.76	12.87	13.52	13.63	14.28	14.39	15.80	15.91	17.32	17.43
ø160	11.86	11.98	12.24	12.36	12.62	12.74	13.00	13.12	13.38	13.50	14.39	14.90	15.28	15.40	16.23	16.35	17.18	17.30	18.13	18.25	19.08	19.20	20.98	21.10	22.88	23.00

SCPD3
SCM
SSD2
MDC2
SMG
LCM
LCR
LCG
LCX
STM
STG
STR2
MRL2
GRC
Cylinder switch
MN3E MN4E
4GA/B
M4GA/B
MN4GA/B
F.R (module unit)
Clean F.R
Precision R
Press gauge Diff. press gauge
Electro-pneumatic R
Speed controller
Auxiliary valve
Fitting/ tube
Clean air unit
Pressure sensor
Flow rate sensor
Valve for air blow
Ending

How to order

Without switch (No magnet for switch)

SSD2 - 12 - 5 ———— N - P7

With switch (Magnet for switch incorporated)

SSD2-L - 12 - 5 - T0H - R - N - P7

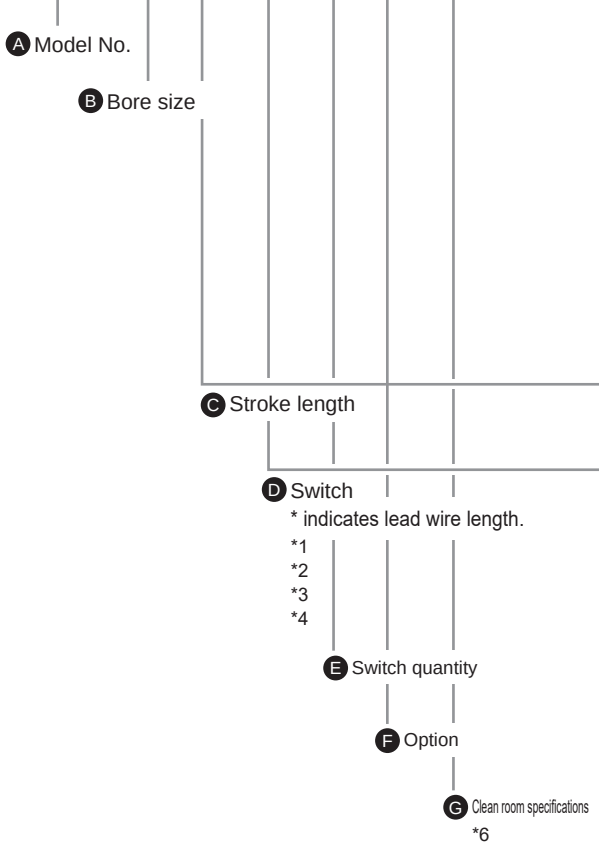

Precautions for model No. selection

1: T2YD switch cannot be installed on ø12 and ø16.
2: ø12 to ø32 is not compatible with T8 switch built-in.
*3: The F switch can be connected only to the piping port surface of bore sizes ø20 and ø25.
*4: ø20 F switch with L lead wire models cannot be selected on stroke lengths of 15 mm or under.
*5: The 5 m lead wire cannot be selected for the F switch.
*6: "P5""P51" is made to order.
*7: Refer to pages 48 and 49 for combinations of variations/options.

[Example of model No.]

SSD2-L-12-5-T0H-R-NP7

A Model : Compact cylinder, standard
B Bore size : ø12 mm
C Stroke length : 5 mm
D Switch model No. : Reed switch T0H, 1 m lead wire length
E Switch quantity : 1 (on rod end)
F Option : Rod end male thread
G Clean room specifications : Exhaust treatment

Code	Content
A Model No.	
SSD2	Double acting/single rod
SSD2-L	Double acting/single rod/with switch

B Bore size (mm)

12	ø12
16	ø16
20	ø20
25	ø25
32	ø32
40	ø40
50	ø50
63	ø63
80	ø80
100	ø100
125	ø125
140	ø140
160	ø160

C Stroke length (mm)

Refer to the stroke length table on following page.

D Switch model No.

Lead wire straight	Lead wire L-shaped	Contact	Voltage AC	Voltage DC	Display	Lead wire	12	16	20	25	32	40	50	63	80	100	125	140	160
F2S		Proximity		●	1-color display	2 wires			●	●									
F3S		Proximity		●	1-color display	3 wires			●	●									
F2H*	F2V*	Proximity		●	1-color display	2 wires			●	●									
F3H*	F3V*	Proximity		●	1-color display	3 wires			●	●									
F3PH*	F3PV*	Proximity		●	1-color display (PNP output) (custom order)	3 wires			●	●									
F2YH*	F2YV*	Proximity		●	2-color display	2 wires			●	●									
F3YH*	F3YV*	Proximity		●	2-color display	3 wires			●	●									
T0H*	T0V*	Reed	●	●	1-color display	2 wires	●	●	●	●	●	●	●	●	●	●	●	●	●
T5H*	T5V*	Reed	●	●	Without indicator lamp	2 wires	●	●	●	●	●	●	●	●	●	●	●	●	●
T8H*	T8V*	Reed	●	●	1-color display	2 wires						●	●	●	●	●	●	●	●
T1H*	T1V*	Proximity	●		1-color display	2 wires			●	●	●	●	●	●	●	●	●	●	●
T2H*	T2V*	Proximity		●	1-color display	2 wires	●	●	●	●	●	●	●	●	●	●	●	●	●
T3H*	T3V*	Proximity		●	1-color display	3 wires	●	●	●	●	●	●	●	●	●	●	●	●	●
T3PH*	T3PV*	Proximity		●	1-color display (PNP output)	3 wires	●	●	●	●	●	●	●	●	●	●	●	●	●
T2WH*	T2WV*	Proximity		●	2-color display	2 wires	●	●	●	●	●	●	●	●	●	●	●	●	●
T2YH*	T2YV*	Proximity		●	2-color display	2 wires			●	●	●	●	●	●	●	●	●	●	●
T3WH*	T3WV*	Proximity		●	2-color display	3 wires	●	●	●	●	●	●	●	●	●	●	●	●	●
T3YH*	T3YV*	Proximity		●	2-color display	3 wires			●	●	●	●	●	●	●	●	●	●	●
T2YD*	-	Proximity		●	2-color display AC magnetic field	2 wires			●	●	●	●	●	●	●	●	●	●	●
T2YDT*	-	Proximity		●	2-color display AC magnetic field	2 wires			●	●	●	●	●	●	●	●	●	●	●
T2JH*	T2JV*	Proximity		●	1-color display off-delay	2 wires			●	●	●	●	●	●	●	●	●	●	●

***Lead wire length**

Blank	1 m (standard)
3	3 m (optional)
5	5 m (optional) (*5)

E Switch quantity

R	1 (on rod end)
H	1 (on head end)
D	2

F Option

Blank	Rod end female thread
N	Rod end male thread

G Clean room specifications

	Structure	Material restriction
P7	Exhaust treatment	-
P71	Vacuum treatment	-
P5	Exhaust treatment	Copper-based/silicon-based/halogen-based materials (fluorine, chlorine, bromine) are prohibited
P51	Vacuum treatment	Copper-based/silicon-based/halogen-based materials (fluorine, chlorine, bromine) are prohibited

(Stroke length table)

Stroke (mm)		Applicable bore size												
		ø12	ø16	ø20	ø25	ø32	ø40	ø50	ø63	ø80	ø100	ø125	ø140	ø160
Standard stroke	5	●	●	●	●	●	●							
	10	●	●	●	●	●	●	●	●	●	●	●	●	●
	15	●	●	●	●	●	●	●	●	●	●			
	20	●	●	●	●	●	●	●	●	●	●	●	●	●
	25	●	●	●	●	●	●	●	●	●	●			
	30	●	●	●	●	●	●	●	●	●	●	●	●	●
	35			●	●	●	●	●	●	●	●			
	40			●	●	●	●	●	●	●	●	●	●	●
	45			●	●	●	●	●	●	●	●			
	50			●	●	●	●	●	●	●	●	●	●	●
	75					●	●	●	●	●	●	●	●	●
	100					●	●	●	●	●	●	●	●	●
	125											●	●	●
	150											●	●	●
	175											●	●	●
	200											●	●	●
	250											●	●	●
	300											●	●	●
Min. stroke length (mm) (*1)		1												
Max. stroke length (mm)		30		50		100						300		
Custom stroke length (mm) (*2)		By 1 mm increments												

1: Stroke length less than 5 mm for 1-color display and stroke length less than 10 mm is not available for 2-color display, off-delay, or types with T1 or T8* switches.
*2: Total length of when using custom stroke length is different between ø12 to ø100 and ø125 to ø160 as below.
(ø12 to ø100)
The total length with the custom stroke length are the same as the next longer standard stroke length.
(ø125 to ø160)
Special total length for custom stroke length is provided when custom stroke length is used.

Theoretical thrust table

(Unit: N)

Bore size (mm)	Operating direction	Working pressure MPa										
		0.1	0.15	0.2	0.3	0.4	0.5	0.6	0.7	0.8	0.9	1.0
ø12	Push	-	17.0	22.6	33.9	45.2	56.5	67.9	79.2	90.5	1.02×10^2	1.13×10^2
	Pull	-	12.7	17.0	25.4	33.9	42.4	50.9	59.4	67.9	76.3	84.8
ø16	Push	-	30.2	40.2	60.3	80.4	1.01×10^2	1.21×10^2	1.41×10^2	1.61×10^2	1.81×10^2	2.01×10^2
	Pull	-	22.6	30.2	45.2	60.3	75.4	90.5	1.06×10^2	1.21×10^2	1.36×10^2	1.51×10^2
ø20	Push	-	47.1	62.8	94.2	1.26×10^2	1.57×10^2	1.88×10^2	2.20×10^2	2.51×10^2	2.83×10^2	3.14×10^2
	Pull	-	35.3	47.1	70.7	94.2	1.18×10^2	1.41×10^2	1.65×10^2	1.88×10^2	2.12×10^2	2.36×10^2
ø25	Push	-	73.6	98.2	1.47×10^2	1.96×10^2	2.45×10^2	2.95×10^2	3.44×10^2	3.93×10^2	4.42×10^2	4.91×10^2
	Pull	-	56.7	75.6	1.13×10^2	1.51×10^2	1.89×10^2	2.27×10^2	2.64×10^2	3.02×10^2	3.40×10^2	3.78×10^2
ø32	Push	-	1.21×10^2	1.61×10^2	2.41×10^2	3.22×10^2	4.02×10^2	4.83×10^2	5.63×10^2	6.43×10^2	7.24×10^2	8.04×10^2
	Pull	-	90.5	1.21×10^2	1.81×10^2	2.41×10^2	3.02×10^2	3.62×10^2	4.22×10^2	4.83×10^2	5.43×10^2	6.03×10^2
ø40	Push	-	1.88×10^2	2.51×10^2	3.77×10^2	5.03×10^2	6.28×10^2	7.54×10^2	8.80×10^2	1.01×10^3	1.13×10^3	1.26×10^3
	Pull	-	1.58×10^2	2.11×10^2	3.17×10^2	4.22×10^2	5.28×10^2	6.33×10^2	7.39×10^2	8.44×10^2	9.50×10^2	1.06×10^3
ø50	Push	-	2.95×10^2	3.93×10^2	5.89×10^2	7.85×10^2	9.82×10^2	1.18×10^3	1.37×10^3	1.57×10^3	1.77×10^3	1.96×10^3
	Pull	-	2.47×10^2	3.30×10^2	4.95×10^2	6.60×10^2	8.25×10^2	9.90×10^2	1.15×10^3	1.32×10^3	1.48×10^3	1.65×10^3
ø63	Push	3.12×10^2	4.68×10^2	6.23×10^2	9.35×10^2	1.25×10^3	1.56×10^3	1.87×10^3	2.18×10^3	2.49×10^3	2.81×10^3	3.12×10^3
	Pull	2.80×10^2	4.20×10^2	5.61×10^2	8.41×10^2	1.12×10^3	1.40×10^3	1.68×10^3	1.96×10^3	2.24×10^3	2.52×10^3	2.80×10^3
ø80	Push	5.03×10^2	7.54×10^2	1.01×10^3	1.51×10^3	2.01×10^3	2.51×10^3	3.02×10^3	3.52×10^3	4.02×10^3	4.52×10^3	5.03×10^3
	Pull	4.54×10^2	6.80×10^2	9.07×10^2	1.36×10^3	1.81×10^3	2.27×10^3	2.72×10^3	3.17×10^3	3.63×10^3	4.08×10^3	4.54×10^3
ø100	Push	7.85×10^2	1.18×10^3	1.57×10^3	2.36×10^3	3.14×10^3	3.93×10^3	4.71×10^3	5.50×10^3	6.28×10^3	7.07×10^3	7.85×10^3
	Pull	7.15×10^2	1.07×10^3	1.43×10^3	2.14×10^3	2.86×10^3	3.57×10^3	4.29×10^3	5.00×10^3	5.72×10^3	6.43×10^3	7.15×10^3
ø125	Push	1.23×10^3	1.84×10^3	2.45×10^3	3.68×10^3	4.91×10^3	6.14×10^3	7.36×10^3	8.59×10^3	9.82×10^3	1.10×10^4	1.23×10^4
	Pull	1.13×10^3	1.70×10^3	2.26×10^3	3.39×10^3	4.52×10^3	5.65×10^3	6.79×10^3	7.92×10^3	9.05×10^3	1.02×10^4	1.13×10^4
ø140	Push	1.54×10^3	2.31×10^3	3.08×10^3	4.62×10^3	6.16×10^3	7.70×10^3	9.24×10^3	1.08×10^4	1.23×10^4	1.39×10^4	1.54×10^4
	Pull	1.44×10^3	2.16×10^3	2.89×10^3	4.33×10^3	5.77×10^3	7.22×10^3	8.66×10^3	1.01×10^4	1.15×10^4	1.30×10^4	1.44×10^4
ø160	Push	2.01×10^3	3.02×10^3	4.02×10^3	6.03×10^3	8.04×10^3	1.01×10^4	1.21×10^4	1.41×10^4	1.61×10^4	1.81×10^4	2.01×10^4
	Pull	1.88×10^3	2.83×10^3	3.77×10^3	5.65×10^3	7.54×10^3	9.42×10^3	1.13×10^4	1.32×10^4	1.51×10^4	1.70×10^4	1.88×10^4

SCPD3
SCM
SSD2
MDC2
SMG
LCM
LCR
LCG
LCX
STM
STG
STR2
MRL2
GRC
Cylinder switch
MN3E MN4E
4GA/B
M4GA/B
MN4GA/B
F.R (module unit)
Clean F.R
Precision R
Press gauge Diff. press gauge
Electro-pneumatic R
Speed controller
Auxiliary valve
Fitting/ tube
Clean air unit
Pressure sensor
Flow rate sensor
Valve for air blow
Ending

Dimensions

● SSD2-(L-)12 to 25-P7*/P5* (With switch TOH/V, T5H/V, T2H/V, T3H/V)

ø12/ø16

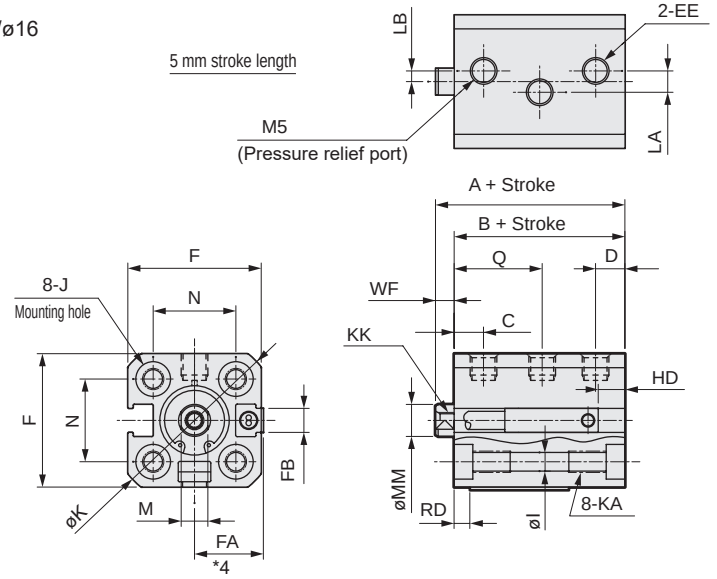

● Rod end male thread

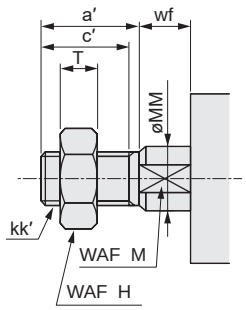

ø20/ø25

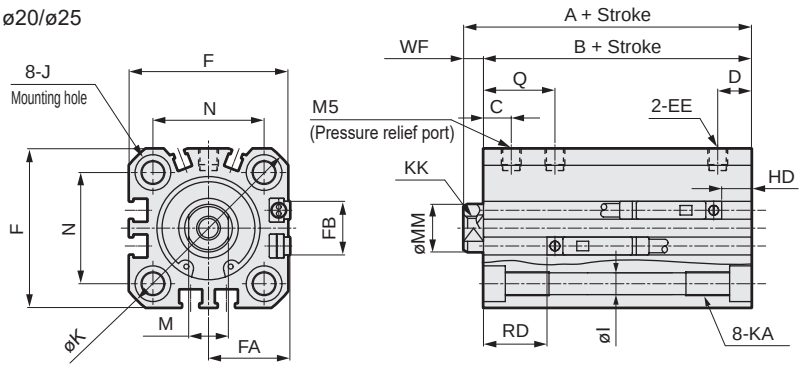

● Precautions regarding the switch mounting groove

*1: Only F switch is available for the ø20 or ø25 piping port surface.

Code / Bore size (mm)	Without switch		Common dimension with switch																		
	A *1	B *1	A	B	C	D	LA		LB		Q *5	EE	F	FA *4	FB	I	J	K	KA	KK
							5 mm stroke length or less	Over 5 mm stroke length	5 mm stroke length or less	Over 5 mm stroke length										
ø12	30.5	27	35.5	32	5.5	5.5	4	0	2	0	16.5 (16)	M5	25	13 (16.5)	4.5	3.5	6.5 spot face depth 3.5	32	M4 depth 7	M3 depth 6
ø16	30.5	27	35.5	32	5.5	5.5	6	0	0	0	16.5	M5	29	15 (18.5)	4.5	3.5	6.5 spot face depth 3.5	38	M4 depth 7	M4 depth 8
ø20	34	29.5	44	39.5	5.5	7	-	-	-	-	16.5	M5	36	18.5 (22)	12.5	5.5	9 spot face depth 5.5	47	M6 depth 11	M5 depth 7
ø25	37.5	32.5	47.5	42.5	7	8.5	-	-	-	-	18	M5	40	20.5 (24)	13.5	5.5	9 spot face depth 5.5	51	M6 depth 11	M6 depth 12

Code / Bore size (mm)	Common dimension with switch				Reed T0H/T0V, T5H/T5V		Proximity T2H/T2V, T3H/T3V		Proximity T2WH/T2WV, T3WH/T3WV		Proximity F2H/F2V, F3H/F3V, F2YH/F2YV, F3YH/F3YV		Proximity F2S/F3S	
	M	MM	N	WF	HD	RD	HD	RD	HD	RD	HD	RD	HD	RD
ø12	5	6	15.5	3.5	4	9	4	9	6	11	-	-	-	-
ø16	6	8	20	3.5	2	11.5	2	11.5	3	13.5	-	-	-	-
ø20	8	10	25.5	4.5	6	14.5	6	14.5	8	16.5	10.5	19	9.5	18
ø25	10	12	28	5	8	16	8	16	10	18	12.5	20	11.5	19

*1: To calculate A + stroke length or B + stroke length when using custom stroke length, apply the next longer standard stroke length instead of the custom stroke length to the stroke length.
Example: If the custom stroke length is 7 mm, apply the standard stroke length 10 mm.
*2: HD and RD dimensions for 5 mm stroke length differ from these dimensions according to the setting.
3: Refer to page 57 for dimensions of HD, RD and projection of the switches of 2-color display, off-delay, AC magnetic field, T1 and T8*.
*4: Dimensions in ( ) of code FA are for the L type lead wire.
*5: Dimensions in ( ) of code Q are for 5 mm stroke length without switch.

● Rod end male thread

Code / Bore size (mm)	a′	c′	H	kk′	M	MM	T	wf
ø12	10.5	9	8	M5	5	6	3.2	3.5
ø16	12	10	10	M6	6	8	3.6	3.5
ø20	14	12	13	M8	8	10	5	4.5
ø25	17.5	15	17	M10 × 1.25	10	12	6	5

Dimensions

● SSD2-(L-)32 to 100-P7*/P5* (With switch TOH/V, T5H/V, T2H/V, T3H/V)

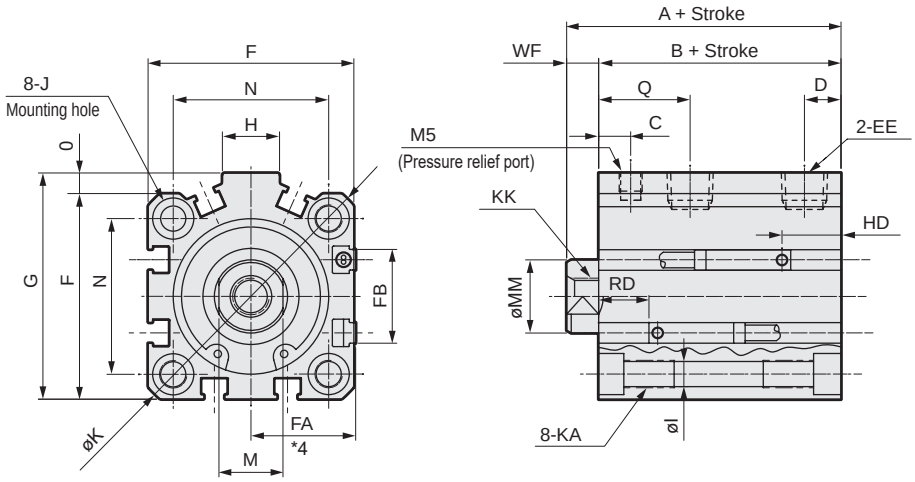

● Rod end male thread

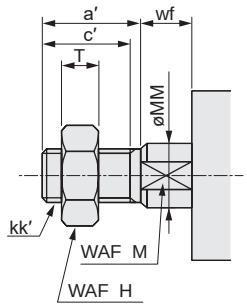

Code	Without switch		Common dimension with switch													
Bore size (mm)	A *1 *5	B *1 *5	A *1	B *1	C	D *7	Q	EE	F	FA *4	FB	G	H	I	J	K
ø32	40 (50)	33 (43)	50	43	7	8(5.5)	20	Rc1/8 *6	45	23 (26.5)	20.5	49.5	12.5	5.5	9 spot face depth 5.5	60
ø40	46.5 (56.5)	39.5 (49.5)	56.5	49.5	8.5	8	21.5	Rc1/8	52	26.5 (30)	27.5	57	15	5.5	9 spot face depth 5.5	69
ø50	48.5 (58.5)	40.5 (50.5)	58.5	50.5	9.5	10.5(9.5)	25	Rc1/4 *6	64	32.5 (36)	28.5	71	18	6.9	11 spot face depth 6.5	86
ø63	54 (64)	46 (56)	64	56	10	11	25.5	Rc1/4	77	39 (42.5)	28.5	84	23	8.7	14 spot face depth 9	103
ø80	68.5 (78.5)	58.5 (68.5)	78.5	68.5	11.5	13	30	Rc3/8	98	49.5 (53)	28.5	104	31	10.5	17.5 spot face depth 11	132
ø100	80 (90)	68 (78)	90	78	15.5	15	35	Rc3/8	117	59 (62.5)	28.5	123.5	38	10.5	17.5 spot face depth 11	156

Code	Common dimension with switch							Reed T0H/T0V, T5H/T5V		Proximity T2H/T2V, T3H/T3V		Proximity T2WH/T2WV, T3WH/T3WV	
Bore size (mm)	KA	KK	M	MM	N	O	WF	HD	RD	HD	RD	HD	RD
ø32	M6 depth 11	M8 depth 13	14	16	34	4.5	7	4	19.5	4	19.5	6	21.5
ø40	M6 depth 11	M8 depth 13	14	16	40	5	7	7	22	7	22	8.5	23.5
ø50	M8 depth 13	M10 depth 15	17	20	50	7	8	7.5	22.5	7.5	22.5	9	24
ø63	M10 depth 25	M10 depth 15	17	20	60	7	8	12.5	23	12.5	23	14	24.5
ø80	M12 depth 28	M16 depth 21	22	25	77	6	10	17.5	25.5	17.5	25.5	19	27
ø100	M12 depth 28	M20 depth 27	27	30	94	6.5	12	23	29.5	23	29.5	24.5	31

*1: To calculate A + stroke length or B + stroke length when using custom stroke length, apply the next longer standard stroke length instead of the custom stroke length to the stroke length. Example: If the custom stroke length is 7 mm, apply the standard stroke length 10 mm.
*2: HD and RD dimensions for 5 mm stroke length differfrom these dimensions according to setting.
3: Refer to page 57 for dimensions of HD, RD and protruding dimensions of the 2-color display, off-delay, AC magnetic field proof, T1 and T8* switches.
*4: Dimensions in ( ) of code FA are for the L type lead wire type.
*5: Dimensions in ( ) of A and B are for the stroke length of more than 50 mm.
*6: The ø32 bore size with a 5 mm stroke and without a switch has a port size of M5. The ø50 bore size with a 10 mm stroke and without a switch has a port size of Rc1/8.
*7: Dimensions in ( ) of codes C and D are for 5 mm stroke length without switch.

● Rod end male thread

Code / Bore size (mm)	a′	c′	H	kk′	M	MM	T	wf
ø32	23.5	20.5	22	M14 × 1.5	14	16	8	5
ø40	23.5	20.5	22	M14 × 1.5	14	16	8	5
ø50	28.5	26	27	M18 × 1.5	17	20	11	5
ø63	28.5	26	27	M18 × 1.5	17	20	11	5
ø80	35.5	32.5	32	M22 × 1.5	22	25	13	8
ø100	35.5	32.5	41	M26 × 1.5	27	30	16	8

Dimensions (ø125 to ø160)

● SSD2-(L-)125 to 160-P7*/P5* (With switch)

● Rod end male thread

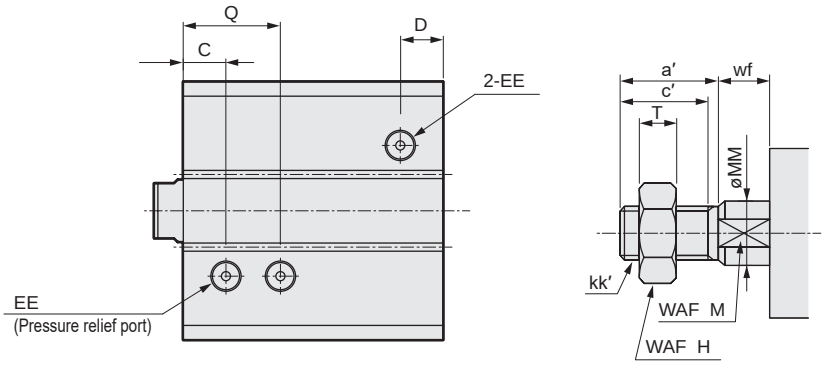

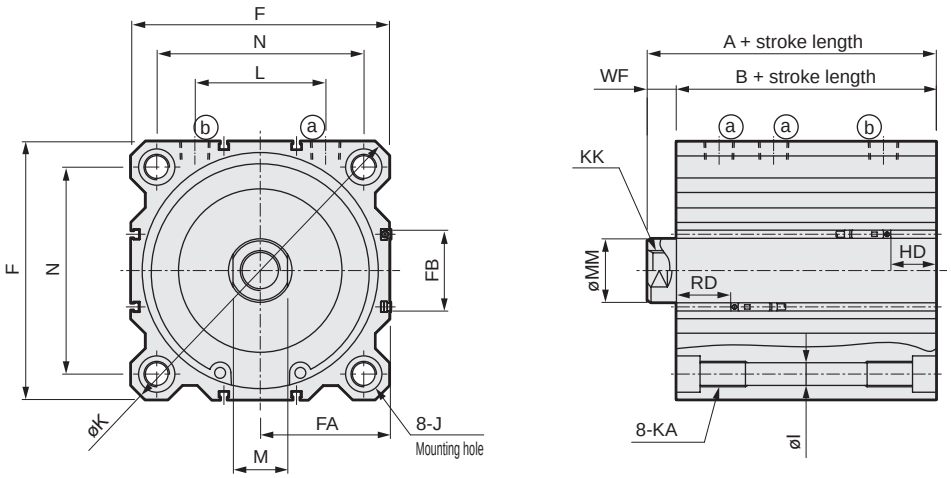

Code / Bore size (mm)	Common dimensions in the type with switch and without switch																		
	A	B	C	D	EE	F	FA	FB	I	J	K	KA	KK	L	M	MM	N	Q	WF
ø125	118	102	23.5	23.5	Rc3/8	142	71.5 (75)	44.5	12.5	20 spot face depth 13	190	M14 depth 25	M22 depth 30	72	30	35	114	53.5	16
ø140	128	112	27	27	Rc3/8	158	79.5 (83)	44.5	12.5	20 spot face depth 13	210	M14 depth 25	M22 depth 30	80	30	35	128	57	16
ø160	143	126	30	30	Rc3/8	178	89.5 (93)	48.5	14.7	23 spot face depth 15.2	238	M16 depth 28	M24 depth 33	90	36	40	144	65	17

Code / Bore size (mm)	Reed T0H/T0V, T5H/T5V		Proximity T2H/T2V, T3H/T3V		Proximity T2WH/T2WY, T3WY/T3WV	
	HD	RD	HD	RD	HD	RD
ø125	24.5	59.5	24.5	59.5	26	61
ø140	31	63	31	63	32.5	64.5
ø160	34	74	34	74	35.5	75.5

- *1: Refer to page 57 for HD and RD dimensions and projection dimensions of 2-color display switches.
- *2: Dimensions in ( ) of code FA are for the L type lead wire.

Dimensions of rod end male thread

Code / Bore size (mm)	a′	c′	H	kk′	M	MM	T	wf
ø125	45	42	46	M30 × 1.5	30	35	18	13
ø140	45	42	46	M30 × 1.5	30	35	18	13
ø160	50	47	55	M36 × 1.5	36	40	21	14

Dimensions common to SSD2 Series with switches (2-color display, off-delay, for AC magnetic field, with T1* and T8* switches)

● SSD2-L-12 to 160 (2-color display, off-delay, with T8* switch: T2YH/V, T3YH/V, T2JH/V, T8H/V)

・ø12/ø16

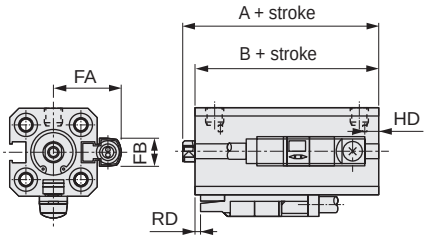

・ø20/ø25

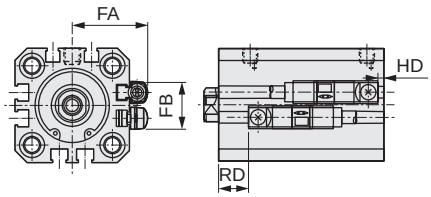

・ø32 to ø160

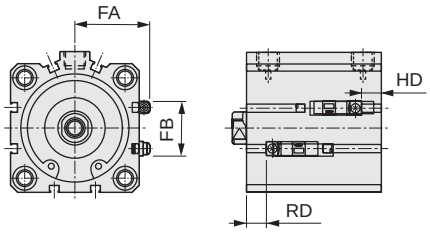

Code / Bore size (mm)	FA	FB	T2YH/V, T3YH/V, T2JH/V		T8H/V	
			RD	HD	RD	HD
ø12	18.8	8	-	-	-	-
ø16	20.8	8	-	-	-	-
ø20	24.3	16	6.5	2	-	-
ø25	26.3	17	8.5	3	-	-
ø32	28.8	24	8.5	3.5	-	-
ø40	32.3	31	10.5	5.5	6	1
ø50	38.3	32	11	6	6.5	1.5
ø63	44.8	32	11.5	11	7	6.5
ø80	55.3	32	14	16	9.5	11.5
ø100	64.8	32	18	21.5	13.5	17
ø125	77	48	58	23	53	18
ø140	85	48	61.5	29.5	56.5	24.5
ø160	95	52	72.5	32.5	67.5	27.5

● SSD2-L-12 to 160 (for AC magnetic field, with T1* switch, T2YD, T2YDT, T1H/V)

・ø12/ø16

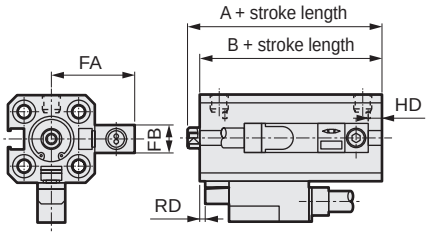

・ø20/ø25

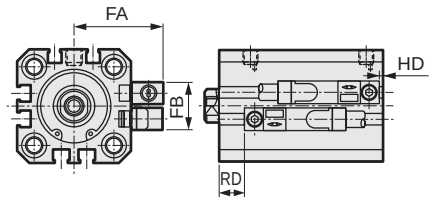

・ø32 to ø160

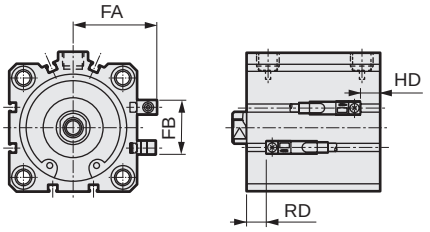

Code / Bore size (mm)	FA	FB	RD	HD
ø12	23.8	8	-	-
ø16	25.8	8	-	-
ø20	29.3	16	6.5	2
ø25	31.3	17	8.5	3
ø32	33.8	24	8.5	3.5
ø40	37.3	31	10.5	5.5
ø50	43.3	32	11	6
ø63	49.8	32	11.5	11
ø80	60.3	32	14	16
ø100	60.8	32	18	21.5
ø125	82.5	48	58	23
ø140	90.5	48	61.5	29.5
ø160	100.5	52	72.5	32.5

Safety Precautions

Always read this section before use.
Refer to page 2 for general information of the cylinder, and to page 320 for general information of the cylinder switch.

Compact cylinder SSD2 Series

Installation & adjustment

1. Common

CAUTION

■ The cylinder switch may malfunction if there is a magnetic substance such as a metal plate installed adjacently. Confirm that a distance of at least 10 mm is allocated from the surface of the cylinders.
(Same clearance for all bore sizes)

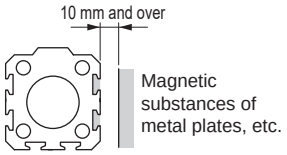

■ The cylinder switch may malfunction if cylinders are installed adjacently. Check that the following distances are allocated between cylinders.
(Same clearance for all bore sizes)

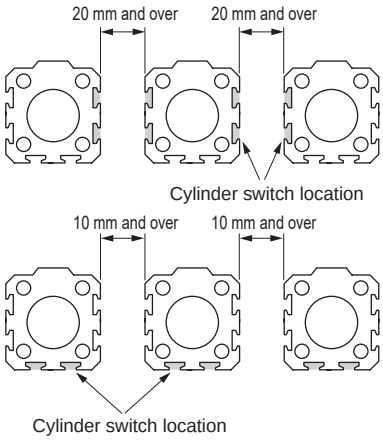

■ As compatible fittings are limited, see the following table to select the fitting.

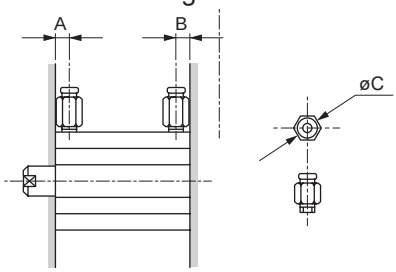

Descriptions / Bore size (mm)	Port diameter	Port location dimensions A	Port location dimensions B	Applicable fittings	Fitting O.D. øC	Inapplicable fittings
ø12	M5	5.5	5.5	SC3W-M5-4-P7* SC3W-M5-6-P7* GWS4-M5-S-P7* GWS4-M5-P7* GWL4-M5-P7* GWL6-M5-P7*	ø11 or less	GWS6-M5
ø16						
ø20		8	5.5			
ø25		11	6			
ø32	Rc1/8	8	8	SC3W-6-4, 6, 8-P7* GWS4-6 GWS6-6-P7* GWS8-6 GWL4-6-P7* GWL6-6-P7*	ø15 or less	GWS10-6 GWL8-6 GWL10-6
ø40		12	8.5			
ø50	Rc1/4	10.5	10.5	SC3W-8-6, 8, 10-P7* GWS4-8 GWS6-8-P7* GWS10-8-P7* GWL4 to 12-8-P7*	ø21 or less	GWS12-8
ø63		13	11			
ø80	Rc3/8	16	13	SC3W-10-6, 8, 10-P7* GWS6-10 GWS8-10-P7* GWS10-10-P7* GWL6 to 12-10-P7*	ø21 or less	-
ø100		23	15			

MDC2

Small direct mounting cylinder

ø6/ø8/ø10

Space saving structure

Overview

This cylinder body has an inner diameter of ø6 to ø10 and can be directly mounted from 4 directions. Can be used for ejection of workpiece or shutter of parts feeder.

Features

Direct mount

As a square body is adopted, it can be directly mounted.
4 surfaces for mounting direction!

Space saving design

Total length dimension and outer diameter dimension are minimized as much as possible to reduce installation space.

With spigot at rod side

As there is a spigot at the rod metal portion, it is easy to perform centering.

Serialized with switch

Miniature reed/proximity switch can be mounted.

CONTENTS

Series variation
Variation and option selection table 60

● **Double acting/single rod (MDC2) 62**
● **Double acting/fine speed (MDC2-F) 66**

⚠ Safety precautions 70

SCPD3
SCM
SSD2
MDC2
SMG
LCM
LCR
LCG
LCX
STM
STG
STR2
MRL2
GRC
Cylinder switch
MN3E MN4E
4GA/B
M4GA/B
MN4GA/B
F.R (module unit)
Clean F.R
Precision R
Press gauge Diff. press gauge
Electro-pneumatic R
Speed controller
Auxiliary valve
Fitting/ tube
Clean air unit
Pressure sensor
Flow rate sensor
Valve for air blow
Ending

Variation and option selection table

◎ : Option variation (check category 2)
○ : C5 compatible (check category 3)
△ : Available depending on conditions (Estimation)
: Not available

			Clean room specifications			
			Exhaust treatment	Vacuum treatment	Exhaust treatment	Vacuum treatment
		Code	P7	P71	P5	P51
Variation	Double acting single rod	Blank	◎	◎	○	○
	With cylinder switch	L	◎	◎	○	○
	Fine speed	F	◎	◎		
	Single acting push	X				
	Single acting pull	Y				

MEMO

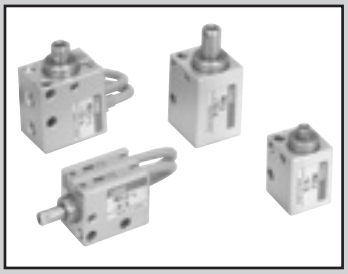

Small direct mounting cylinder double acting/single rod

MDC2 Series

● Bore size: ø4/ø6/ø8/ø10

JIS symbol

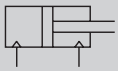

● Double acting

RoHS

Structure and material restriction

	Structure	Material restriction			Model No.
P7 Series	Exhaust treatment				P7
	Vacuum treatment				P71
P5 Series (custom order product)	Exhaust treatment	Copper-based materials prohibited	Silicon-based materials prohibited	Halogen-based materials prohibited (fluorine, chlorine, bromine)	P5
	Vacuum treatment	Copper-based materials prohibited	Silicon-based materials prohibited	Halogen-based materials prohibited (fluorine, chlorine, bromine)	P51

Specifications

Descriptions	MDC2-P7* / P5*, MDC2-L-P7* / P5* (with switch)		
Bore size mm	ø6	ø8	ø10
Actuation	Double acting		
Working fluid	Compressed air		
Max. working pressure MPa	0.7		
Min. working pressure MPa	0.15		0.1
Proof pressure MPa	1.05		
Ambient temperature °C	-10 to 60 (no freezing) (*2)		
Port size	M3		M5
Port size (relief port)	M3		M5
Stroke tolerance mm	+0.5 0		
Working piston speed mm/s	50 to 500		
Cushion	None		
Lubrication	Not available		
Allowable energy absorption J	This product cannot absorb the energy generated by external load mounted on the cylinder. If you use the product with no load, separately provide a shock absorber on the outside.		

*1: When using the proximity switch, use the cylinder at 40°C or less.

Stroke length

Bore size (mm)	Standard stroke length (mm)	Max. stroke length (mm)	Min. stroke length with two switches (mm)		Min. stroke length with one switch (mm)	
			Reed switch	Proximity switch Note 2	Reed switch	Proximity switch
ø6	4/6/8	8	6	4 (8)	4	4
ø8	4/6/8	8	8	4 (8)	4	4
ø10	4/6/10	10	6	4 (10)	4	4

*1: Other than standard stroke length is not available.
*2: For F3P, F2Y or F3Y, the minimum stroke length will be the dimensions in ( ).

Switch specifications

Descriptions	Reed 2-wire	Proximity 2-wire			Proximity 3-wire			
	FOH/V	F2H/F2V	F2S	F2YH/F2YV	F3H/F3V	F3S	F3PH/F3PV (custom order)	F3YH/F3YV
Applications	Programmable controller	Programmable controller			Programmable controller, relay			
Output method	-	-			NPN output		PNP output	NPN output
Power supply voltage	-	-			10 to 28 VDC		4.5 to 28 VDC	10 to 28 VDC
Load voltage	24 VDC	10 to 30 VDC		24 VDC ±10%	30 VDC or less			
Load current	5 to 20 mA (*1)	5 to 20 mA (*1)			50 mA or less			
Indicator lamp	Yellow LED (Lit when ON)	Yellow LED (Lit when ON)	LED (Lit when ON)	Red/green LED (Lit when ON)	Yellow LED (Lit when ON)	LED (Lit when ON)	Yellow LED (Lit when ON)	Red/green LED (Lit when ON)
Leakage current	1 mA or less	1 mA or less			10 μA or less			
Weight g	1 m: 10 3 m: 29							

*1: Refer to page 309 for detailed switch specifications and Dimensions.
*2: Max. load current: 20mA at 25°C.The current is lower than 25 mA if the operating ambient temperature around the switch is higher than 20˚C. (60 to 5 mA at 10°C)
*3: The F type switch uses a bend-resistant lead wire.

Cylinder weight table

(g)

Stroke length (mm)	3		4		6		8		10	
Bore size (mm)	W/o switch	With switch	W/o switch	With switch	W/o switch	With switch	W/o switch	With switch	W/o switch	With switch
ø6	-	-	11.4	13.1	12.4	14	13.4	15	-	-
ø8	-	-	16.1	18.2	17.4	19.5	18.7	20.8	-	-
ø10	-	-	21.4	23.3	22.6	24.5	-	-	25	26.9

Theoretical thrust table

(Unit: N)

Bore size (mm)	Operating direction	Working pressure MPa							
		0.1	0.15	0.2	0.3	0.4	0.5	0.6	0.7
ø6	Push	-	4.24	5.65	8.48	11.3	14.1	17.0	19.8
	Pull	-	2.36	3.14	4.71	6.28	7.85	9.42	11.0
ø8	Push	-	7.54	10.1	15.1	20.1	25.1	30.2	35.2
	Pull	-	4.59	6.13	9.19	12.3	15.3	18.4	21.4
ø10	Push	7.85	11.8	15.7	23.6	31.4	39.3	47.1	55.0
	Pull	5.03	7.54	10.1	15.1	20.1	25.1	30.2	35.2

SCPD3
SCM
SSD2
MDC2
SMG
LCM
LCR
LCG
LCX
STM
STG
STR2
MRL2
GRC
Cylinder switch
MN3E MN4E
4GA/B
M4GA/B
MN4GA/B
F.R (module unit)
Clean F.R
Precision R
Press gauge Diff. press gauge
Electro-pneumatic R
Speed controller
Auxiliary valve
Fitting/ tube
Clean air unit
Pressure sensor
Flow rate sensor
Valve for air blow
Ending

How to order

● Without switch (No magnet for switch)

MDC2 - 6 - 4 ——— P7

● With switch (Magnet for switch incorporated)

MDC2-L - 6 - 4 - F2V - R - P7

Ⓐ Model No.
Ⓑ Bore size
Ⓒ Stroke length
Ⓓ Switch model No. *1 *2 *3 *4
Ⓔ Switch quantity
Ⓕ Clean room specifications

Code	Content	
Ⓐ Model No.		
MDC2	Double acting/single rod	Without switch
MDC2-L	Double acting/single rod	With switch

Ⓑ Bore size	
6	ø6
8	ø8
10	ø10

Ⓒ Stroke length (mm)	
4	4 (ø6 to ø10)
6	6 (ø6 to ø10)
8	8 (ø6, ø8)
10	10 (ø10)

Ⓓ Switch model No.

Lead wire straight	Lead wire L-shaped	Contact	Voltage AC	Voltage DC	Display	Lead wire
F0H*	**F0V***	Reed		●	1-color display	2 wires
F2S*		Proximity		●		
F2H*	**F2V***			●		
F3S*				●		3 wires
F3H*	**F3V***			●		
F3PH*	**F3PV***			●	1-color display PNP output (custom order)	
F2YH*	**F2YV***			●	2-color display	2 wires
F3YH*	**F3YV***			●		3 wires

***Lead wire length**	
Blank	1 m (standard)
3	3 m (option)

Ⓔ Switch quantity	
R	1 (on rod end)
H	1 (on head end)
D	2

Ⓕ Clean room specifications

	Structure	Material restriction
P7	Exhaust treatment	-
P71	Vacuum treatment	-
P5	Exhaust treatment	Copper-based/silicon-based/halogen-based materials (fluorine, chlorine, bromine) are prohibited
P51	Vacuum treatment	Copper-based/silicon-based/halogen-based materials (fluorine, chlorine, bromine) are prohibited

⚠ Precautions for model No. selection

*1: Minimum stroke length with two reed switches is 6 mm for ø6, 8 mm for ø8, or 6 mm for ø10.
*2: For MDC2 with reed switch, the cylinder cannot be mounted on a magnetic substance (iron plate, etc.). This could lead to switch detection malfunction.
*3: For MDC2 with proximity switch, use the cylinder at ambient temperature of 40°C or lower. Failure to do so could lead to malfunction of switch detection.
*4: When using MDC2-L-6 with reed switch, use the non-magnetic bolt (stainless steel hexagon socket head cap screw, etc.) for cylinder mounting bolt. Failure to do so could lead to malfunction of switch detection.
*5: "P5" and "P51" are custom order products.
*6: Refer to page 60 for combination of variations/options.

[Example of model No.]

MDC2-L-6-4-F2V-R-P7

Model: Small direct mounting cylinder

Ⓐ Model No. : Double acting/single rod with switch
Ⓑ Bore size : ø6 mm
Ⓒ Stroke length : 4 mm
Ⓓ Switch model No. : Proximity F2V switch, lead wire 1 m
Ⓔ Switch quantity : 1 (on rod end)
Ⓕ Clean room specifications : Exhaust treatment

Dimensions

● MDC2-6, 8, 10

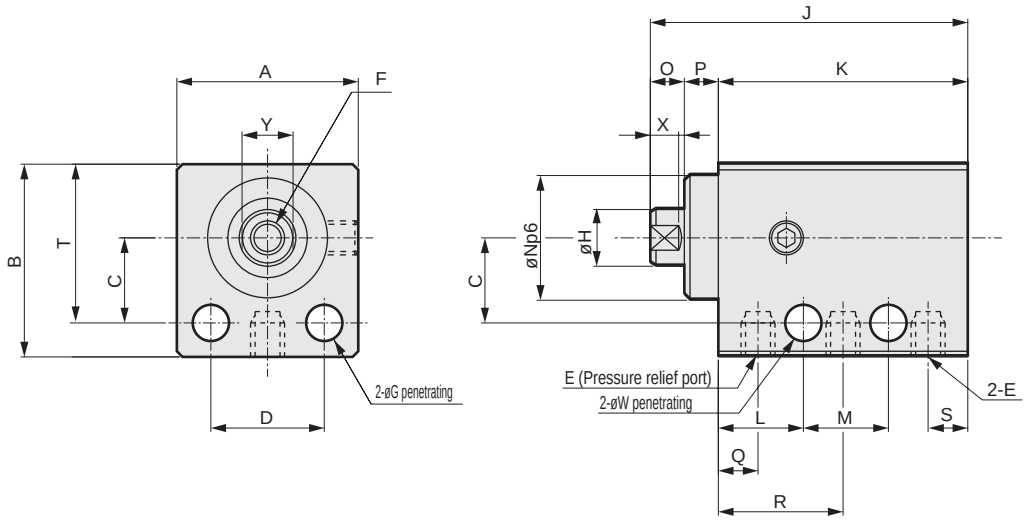

Bore size (mm)	Stroke	A	B	C	D	E	F	G	H	J	K	L	M	N	O	P	Q	R	S	T	W	X	Y
ø6	4	14	15	6.5	8.5	M3	M2.5 × 0.45 Depth 4	3.2	4	28	22	7.5	7.5	9	3	3	3.5	11	3.5	12	3.2	2.5	3.5
	6									30	24		9										
	8									32	26		11										
ø8	4	16	17	7.5	10	M3	M3 × 0.5 Depth 5	3.2	5	28	22	7.5	7.5	11	3	3	3.5	11	3.5	14	3.2	2.5	4.5
	6									30	24		9										
	8									32	26		11										
ø10	4	16	17.5	8	10	M5	M3 × 0.5 Depth 5	3.2	6	36	30	10.5	9.5	11	3	3	5	15	5	14.5	3.2	2.5	5
	6									38	32		11.5										
	10									42	36		15.5										

● MDC2-L-6, 8, 10

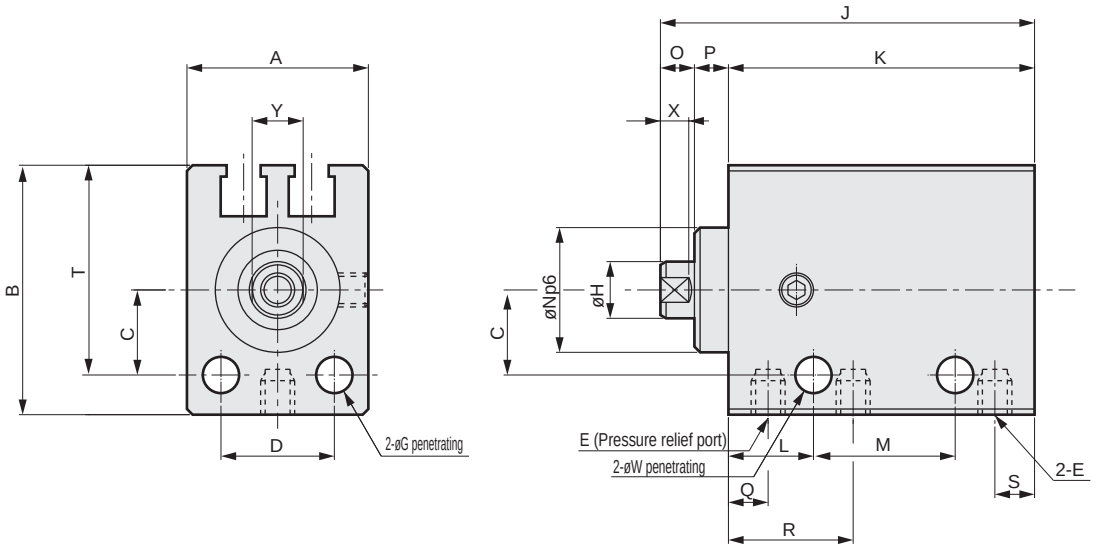

Bore size (mm)	Stroke	A	B	C	D	E	F	G	H	J	K	L	M	N	O	P	Q	R	S	T	W	X	Y
ø6	4	14	19	6.5	8.5	M3	M2.5 × 0.45 Depth 4	3.2	4	33	27	7.5	12.5	9	3	3	3.5	11	3.5	16	3.2	2.5	3.5
	6									35	29		14										
	8									37	31		16										
ø8	4	16	22	7.5	10	M3	M3 × 0.5 Depth 5	3.2	5	33	27	7.5	12.5	11	3	3	3.5	11	3.5	18.5	3.2	2.5	4.5
	6									35	29		14										
	8									37	31		16										
ø10	4	16	22	8	10	M5	M3 × 0.5 Depth 5	3.2	6	39	33	10.5	12.5	11	3	3	5	15	5	19	3.2	2.5	5
	6									41	35		14.5										
	10									45	39		18.5										

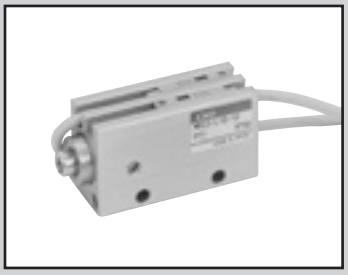

Compact direct mounting cylinder double acting/fine speed

MDC2-F Series

● Bore size ø6/ø8/ø10

JIS symbol

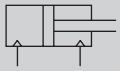

● Double acting

RoHS CAD

Structure and material restriction

	Structure	Model No.
P7 Series	Exhaust treatment	P7
	Vacuum treatment	P71

Specifications

Descriptions	MDC2-F-P7*, MDC2-LF-P7* (with switch)		
Bore size mm	ø6	ø8	ø10
Actuation	Double acting/single rod		
Working fluid	Compressed air		
Max. working pressure MPa	0.7		
Min. working pressure MPa	0.15		0.1
Proof pressure MPa	1.05		
Ambient temperature °C	5 to 60 (*1)		
Port size	M3		M5
Port size (relief port)	M3		M5
Stroke tolerance mm	+0.5 0		
Working piston speed mm/s	1 to 200		
Cushion	None		
Lubrication	Lubrication not possible		
Allowable energy absorption J	This product cannot absorb the energy generated by external load mounted on the cylinder. If you use the product with no load, separately provide a shock absorber on the outside.		

*1: 40°C when proximity switch is provided.

Stroke length

Model No.	Bore size (mm)	Standard stroke length (mm)	Max. stroke length (mm)	Min. stroke length with two switches (mm)		Min. stroke length with one switch (mm)	
				Reed switch	Proximity switch *2	Reed switch	Proximity switch
MDC2-F MDC2-LF	ø6	4/6/8	8	6	4 (8)	4	4
	ø8	4/6/8	8	8	4 (8)	4	4
	ø10	4/6/10	10	6	4 (10)	4	4

*1: Other than standard stroke length is not available.
*2: For F3P, F2Y or F3Y, the minimum stroke length will be the dimensions in ( ).

Switch specifications

Descriptions	Reed 2-wire	Proximity 2-wire			Proximity 3-wire			
	FOH/V	F2H/F2V	F2S	F2YH/F2YV	F3H/F3V	F3S	F3PH/F3PV (custom order)	F3YH/F3YV
Applications	Programmable controller	Programmable controller			Programmable controller, relay			
Output method	-	-			NPN output		PNP output	NPN output
Power supply voltage	-	-			10 to 28 VDC		4.5 to 28 VDC	10 to 28 VDC
Load voltage	24 VDC	10 to 30 VDC		24 VDC ±10%	30 VDC or less			
Load current	5 to 20 mA (*1)	5 to 20 mA (*1)			50 mA or less			
Indicator lamp	Yellow LED (Lit when ON)	Yellow LED (Lit when ON)	LED (Lit when ON)	Red/green LED (Lit when ON)	Yellow LED (Lit when ON)	LED (Lit when ON)	Yellow LED (Lit when ON)	Red/green LED (Lit when ON)
Leakage current	1 mA or less	1 mA or less			10 μA or less			
Weight g	1 m: 10 3 m: 29							

*1: Refer to page 309 for detailed switch specifications and dimensions.
*2: Max. load current: 20mA at 25°C.The current is lower than 25 mA if the operating ambient temperature around the switch is higher than 20°C. (60 to 5 mA at 10°C)
*3: The F type switch uses a bend-resistant lead wire.

Theoretical thrust table

(Unit: N)

Bore size (mm)	Operating direction	Working pressure MPa							
		0.1	0.15	0.2	0.3	0.4	0.5	0.6	0.7
ø6	Push	-	4.24	5.65	8.48	11.3	14.1	17.0	19.8
	Pull	-	2.36	3.14	4.71	6.28	7.85	9.42	11.0
ø8	Push	-	7.54	10.1	15.1	20.1	25.1	30.2	35.2
	Pull	-	4.59	6.13	9.19	12.3	15.3	18.4	21.4
ø10	Push	7.85	11.8	15.7	23.6	31.4	39.3	47.1	55.0
	Pull	5.03	7.54	10.1	15.1	20.1	25.1	30.2	35.2

How to order

● Without switch (No magnet for switch)

MDC2-F - 6 - 4 ———— P7

● With switch (Magnet for switch incorporated)

MDC2-LF - 6 - 4 - F2V - R - P7

Ⓐ Bore size

Ⓑ Stroke length

Ⓓ Switch quantity

Ⓒ Switch model No.
*1
*2
*3

Ⓔ Clean room specifications

Code	Content
Ⓐ Bore size	
6	ø6
8	ø8
10	ø10

Ⓑ Stroke length (mm)

	Bore size	ø6	ø8	ø10
4	4	●	●	●
6	6	●	●	●
8	8	●	●	–
10	10	–	–	●

Ⓒ Switch model No.

Lead wire straight	Lead wire L-shaped	Contact	Display	Lead wire
F0H*	**F0V***	Reed	1-color display	2 wires
F2S*		Proximity		
F2H*	**F2V***			
F3S*				3 wires
F3H*	**F3V***			
F3PH*	**F3PV***		1-color display PNP output (custom order)	
F2YH*	**F2YV***		2-color display	2 wires
F3YH*	**F3YV***			3 wires

***Lead wire length**	
Blank	1 m (standard)
3	3 m (option)

Ⓓ Switch quantity

R	1 (on rod end)
H	1 (on head end)
D	2

Ⓔ Clean room specifications

	Structure
P7	Exhaust treatment
P71	Vacuum treatment

⚠ Precautions for model selection

*1: Min. stroke length with two reed switches is 6 mm for ø6, 8 mm for ø8, or 6 mm for ø10.
*2: When using MDC2 with reed switch, the cylinder cannot be mounted on a magnetic matter (steel sheet, etc.). Failure to do so could lead to malfunction of switch detection.
*3: When using MDC2 with proximity switch, use the cylinder at ambient temperature of 40°C or lower.
Failure to do so could lead to malfunction of switch detection.
*4: When using MDC2-LF-6 with reed switch, use the non-magnetic bolt (stainless steel hexagon socket head cap screw, etc.) for cylinder mounting bolt.
Failure to do so could lead to malfunction of switch detection.
*5: Refer to page 60 for combination of variations/options.

[Example of model No.]

MDC2-LF-6-4-F2V-R-P7

Model: Compact direct mounting cylinder fine speed

Ⓐ Bore size : ø6 mm
Ⓑ Stroke length : 4 mm
Ⓒ Switch model No. : Proximity F2V switch, lead wire 1 m
Ⓓ Switch quantity : 1 (on rod end)
Ⓔ Clean room specifications : Exhaust treatment

Dimensions

Same as MDC2 Series (double acting/single rod). Refer to page 65.

SCPD3
SCM
SSD2
MDC2
SMG
LCM
LCR
LCG
LCX
STM
STG
STR2
MRL2
GRC
Cylinder switch
MN3E MN4E
4GA/B
M4GA/B
MN4GA/B
F.R (module unit)
Clean F.R
Precision R
Press gauge Diff. press gauge
Electro-pneumatic R
Speed controller
Auxiliary valve
Fitting/ tube
Clean air unit
Pressure sensor
Flow rate sensor
Valve for air blow
Ending

Dimensions with switch

● Switch mounting position

Reed switch (F0)		Proximity switch F2S, F3S	Proximity switch (F2, F3, F2Y, F3Y, F3P)	
Lead wire straight (H)	Lead wire L-shaped (V)		Lead wire straight (H)	Lead wire L-shaped (V)

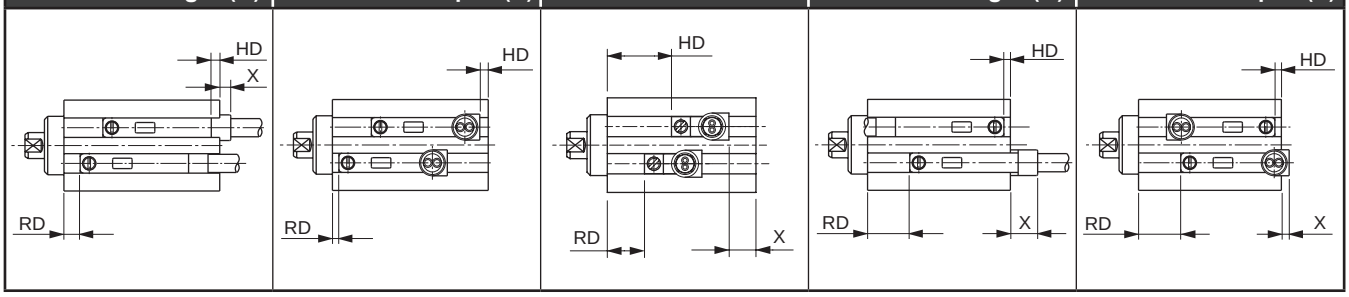

Note: This shows the switch mounting position when shipped.

● Switch installation dimensions

· Reed switch (mm)

Switch mounting method		F0 V/H								
		RD			HD			X (*2)		
Bore size (mm)	Actuation	Stroke length (mm)			Stroke length (mm)			Stroke length (mm)		
		4	6	8 (10)	4	6	8 (10)	4	6	8 (10)
ø6	Double acting	6	6	6	-0.5	0	0	3.5 0.5	3 -	3 -
ø8	Double acting	6	6	6	-1.5	0	0	4.5 1.5	3 -	3 -
ø10	Double acting	11.5	11.5	11.5	0.5	0.5	0.5	2.5 -	2.5 -	2.5 -

· Proximity switch (mm)

Switch mounting method		F2S, F3S						F2 V/H F3 V/H								
		RD			HD			RD			HD			X (*2)		
Bore size (mm)	Actuation	Stroke length (mm)			Stroke length (mm)			Stroke length (mm)			Stroke length (mm)			Stroke length (mm)		
		4	6	8 (10)	4	6	8 (10)	4	6	8 (10)	4	6	8 (10)	4	6	8 (10)
ø6	Double acting	10.5	10.5	10.5	14.5	16.5	18.5	11.5	11.5	11.5	1	1	1	4.2 1.2	2.2 -	0.2 -
ø8	Double acting	10.5	10.5	10.5	14.5	16.5	18.5	11.5	11.5	11.5	1	1	1	4.2 1.2	2.2 -	0.2 -
ø10	Double acting	15	15	15	19	21	25	16	16	16	2.5	2.5	2.5	2.7 -0.3	0.7 -	- -

Switch mounting method		F2YH/V, F3YH/V, F3PH/V								
		RD			HD			X (*2)		
Bore size (mm)	Actuation	Stroke length (mm)			Stroke length (mm)			Stroke length (mm)		
		4	6	8 (10)	4	6	8 (10)	4	6	8 (10)
ø6	Double acting	11.5	11.5	11.5	1	1	1	8.7 5.7	6.7 3.7	4.7 1.7
ø8	Double acting	11.5	11.5	11.5	1	1	1	8.7 5.7	6.7 3.7	4.7 1.7
ø10	Double acting	16	16	16	2.5	2.5	2.5	7.2 4.2	5.2 2.2	1.2 -

*1: Min. stroke lengths when two switches installed are shown in the table below.
*2: X dimension indicates the protruding dimension from the end surface of the switch body.
The upper column indicates X dimension when axial lead wire is used and the lower column indicates X dimension when L type lead wire is used.
*3: Installing positions of F2/3Y and F3P are same as F2/3, while X dimensions are longer than F2/3.

Min. stroke length (with 2 switches) (mm)

Bore size (mm)	Reed switch	Proximity switch
ø6	6	4 (8)
ø8	8	4 (8)
ø10	6	4 (10)

Note: For F3P, F2Y or F3Y, the min. stroke length will be the dimensions in ( ).

MEMO

Safety Precautions

Always read this section before use.

Refer to page 2 for general information of the cylinder, and to page 320 for general information of the cylinder switch.

Small direct mounting cylinder MDC2 Series

Design & selection

1. Common

CAUTION

■ When using MDC2 with reed switch, the cylinder cannot be mounted on a magnetic matter (steel plate, etc.). Otherwise, this could lead to switch detection malfunction.

■ For MDC2 with proximity switch, use the cylinder at ambient temperature of 40°C or less. Failure to do so could lead to malfunction of switch detection.

2. Fine speed MDC2-F

CAUTION

■ Use the product with no lubrication.
- Application of lubrication may cause changes in characteristics.

■ Assemble the speed controller near the cylinder.
- When installed far from the cylinder, the speed becomes unstable.
- Use the SC-M3/M5-F, SC3W, SCD-M3/M5-F Series speed controller.

■ In general, the speed is stabler at higher air pressure and lower load factor.
- Use at a 50% or less load factor.

■ Stable speed control is achieved with a meter-out circuit.
- When fine speed activation is performed with operating direction PUSH for the single rod cylinder, the popping out phenomenon occurs when operation starts if the load resistance is low. For countermeasures, use the ⓑ, ⓒ or ⓓ circuit. Note that circuit ⓓ is the most stable.

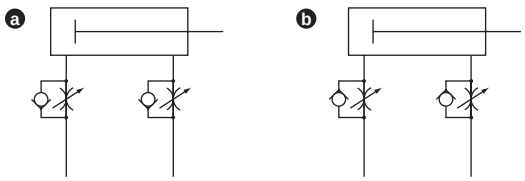

ⓐ PUSH: Meter-out
PULL: Meter-out

ⓑ PUSH: Meter-in
PULL: Meter-in

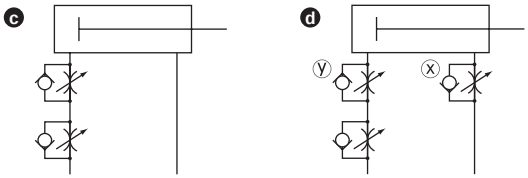

ⓒ PUSH: Meter-in
PULL: Meter-out

ⓓ PUSH: Meter in-out
PULL: Meter-out

Speed adjustment method for PUSH operation of ⓓ circuit:
1. Set the speed with the speed controller x.
2. Restrict the speed with the speed controller y until there is no popping out.
3. Check the speed again.

(*1) When comparing ⓑⓒⓓ, operation is the most stable with ⓓ circuit.

(*2) For vertical mounting, combine the cylinder with a meter-out circuit, as it will fall under its own weight when a meter-in circuit is used.

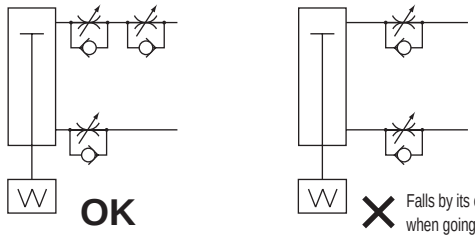

(*3) Use the circuit shown in the figure below for the serial connection of the speed controllers.

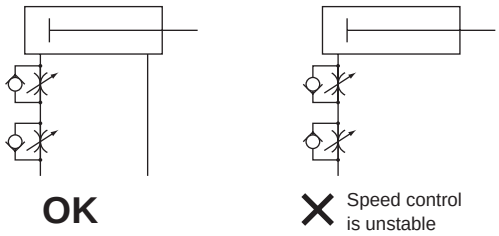

(Guidelines for pop-out generation)

Popping out occurs in the following cases.
- Thrust > Resistance

* Resistance: Thrust caused by residual pressure on the exhaust side (in the fine speed, suction pressure = residual pressure) + { When using horizontally: frictional force caused by load / When using vertically: load self-weight

■ Do not apply a lateral load to the cylinder.
- With a lateral load, operation will become unstable.

■ Avoid using this product where vibration is present.
- The product will be adversely affected by vibration and operation will be unstable.

Mounting, installation & adjustment

1. Common

⚠ CAUTION

■ As compatible fittings are limited, refer to the table below to select the fitting.

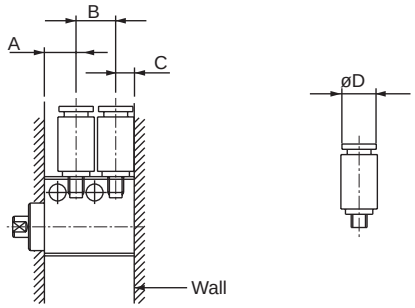

Descriptions / Bore size (mm)	Port size	Port position dimensions (mm) Stroke length	A	B	C	With wall: Applicable fittings	Fitting O.D. øD	Inapplicable fittings	Without wall: Applicable fittings	Fitting O.D. øD	Inapplicable fittings
ø6	M3	4	6	7.5	3.5	GWS3-M3-S-P7* FTS4-M3-P80	ø7 or smaller	GWS4-M3-S SC3W-M3-3 SC3W-M3-4 SC3U-M3-3	GWS3-M3-S-P7* SC3W-M3-*-P7*	ø7.5 or smaller	GWS4-M3-S
		6	6	9.5	3.5				GWS3-M3-S-P7* GWS4-M3-S-P7* FTS4-M3-P80 SC3W-M3-*-P7*	ø9.5 or smaller	
		8	6	11.5	3.5				↑	ø11.5 or smaller	
ø8	M3	4	6	7.5	3.5	GWS3-M3-S-P7* FTS4-M3-P80	ø7 or smaller	GWS4-M3-S SC3W-M3-3 SC3W-M3-4 SC3U-M3-3 SC3U-M3-4	GWS3-M3-S-P7* SC3W-M3-*-P7*	ø7.5 or smaller	GWS4-M3-S
		6	6	9.5	3.5				GWS3-M3-S-P7* GWS4-M3-S-P7* FTS4-M3-P80 SC3W-M3-*-P7*	ø9.5 or smaller	
		8	6	11.5	3.5				↑	ø11.5 or smaller	
ø10	M5	4	7	10	5	GWS*-M5-S-P7* SC3W-M5-*-P7* GWS4-M5-S-P7* FTS4-M5-P80 FTS6-M5-P80	ø10 or smaller	GWS*-M5 GWS6-M5-S	GWS*-M5-S-P7* SC3W-M5-*-P7* GWS4-M5-S-P7* FTS4-M5-P80 FTS6-M5-P80	ø10 or smaller	GWS*-M5 GWS6-M5-S
		6	7	12	5				GWS*-M5-S-P7* SC3W-M5-*-P7* GWS4-M5-S-P7* GWS6-M5-S-P7* GWS4-M5-P7* FTS4-M5-P80 FTS6-M5-P80	ø12 or smaller	GWS6-M5
		10	7	16	5				GWS*-M5-S-P7* SC3W-M5-*-P7* GWS4-M5-S-P7* GWS6-M5-S-P7* GWS4-M5-P7* GWS6-M5-P7* FTS4-M5-P80 FTS6-M5-P80	ø14 or smaller	

* Port position dimension indicates dimensions for standard/without switch

2. Fine speed MDC2-F

⚠ CAUTION

■ Perform adjustment such as centering so that a lateral load is not applied to the cylinder. Adjust and install the sliding guide so that it is not twisted.

- When the load or the resistance fluctuates, operation becomes unstable.
- If the difference between static friction and kinetic friction of the guide is large, operation becomes unstable.

Use/maintenance

1. Common

⚠ CAUTION

■ As this cylinder is a non-disassembly type, do not apply excessive force to the rod metal or cylinder body.

MEMO

SMG

Compact cylinder

ø6/ø10/ø16/ø20/ø25

Space saving structure

Overview

Super mount cylinder is a compact square shape cylinder with high rigidity which realizes excellent mounting accuracy and direct mounting on multiple surfaces. Adopting a square shape body helps improve designability. This makes an excellent solution for creating a compact system with high-density and high-precision.

Features

Lightweight and space saving

Integration of the mounting block helps save space and make the entire system lightweight.

Simple shape for flexible mounting

Mounting block can be directly mounted on five surfaces.

The detection switch fits almost flush

The detection switch can fit almost flush into the body.

Either horizontal or vertical layout can be chosen for the lead wire

The switch lead wires can be taken out either horizontally or vertically.

CONTENTS

Series variation

Product introduction 75

Variation and option selection table 74

● **Double acting/single rod (SMG) 76**

● **Double acting/fine speed (SMG-F) 82**

⚠ Safety precautions 86

SCPD3
SCM
SSD2
MDC2
SMG
LCM
LCR
LCG
LCX
STM
STG
STR2
MRL2
GRC
Cylinder switch
MN3E MN4E
4GA/B
M4GA/B
MN4GA/B
F.R (module unit)
Clean F.R
Precision R
Press gauge Diff. press gauge
Electro-pneumatic R
Speed controller
Auxiliary valve
Fitting/ tube
Clean air unit
Pressure sensor
Flow rate sensor
Valve for air blow
Ending

Variation and option selection table

◎ : Option variation (check category 2)
○ : C5 compatible (check category 3)
△ : Available depending on conditions (Estimation)
: Not available

			Clean room specifications							
			Exhaust treatment	Vacuum treatment	Exhaust treatment	Vacuum treatment	Exhaust treatment	Vacuum treatment	Exhaust treatment	Vacuum treatment
		Code	P7	P71	P72	P73	P5	P51	P52	P53
Variation	Double acting single rod	Blank	◎	◎			○	○		
Variation	With cylinder switch	L	◎	◎			○	○		
Variation	Fine speed	F	○	○						
Variation	Non-rotation	M	*2	*2	○	○	*2	*2	○	○
Variation	Single acting push type	Y								
Variation	Single acting pull type	X								
Port thread	NPT1/8 (ø25)	N	○	○			○	○		
Port thread	G 1/8 (ø25)	G	○	○			○	○		
Option	Customized piston rod end form	N**	○	○			○	○		

*1: The combinations above do not apply if the thread size of the end of the piston rod is different. Contact CKD.
*2: For the combination of the clean room specification and the rotation-stop, a separate guide bar slides in addition to the piston rod.
Since dust can be generated from the area in addition to the piston rod, different codes (P52, P72 (exhaust treatment); P53, P73 (vacuum treatment)) are assigned.

Excellent mounting on 5 surfaces.

Compact/square shape cylinder, compact cylinder (ø6 to ø25) which allows direct mounting from any of five surfaces.

Lightweight and space saving

Space saving and lightweight with integration of mount block.

Up to 33% Less weight (Compared with conventional models)

Up to 23% Space saving (Compared with conventional models)

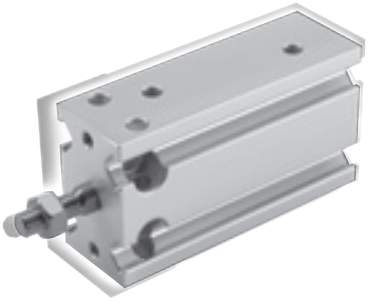

Simple shape for flexible mounting

Integration of the mount block allows you to choose any of the five surfaces for direct mounting.

Direct mounting on any of the five surfaces

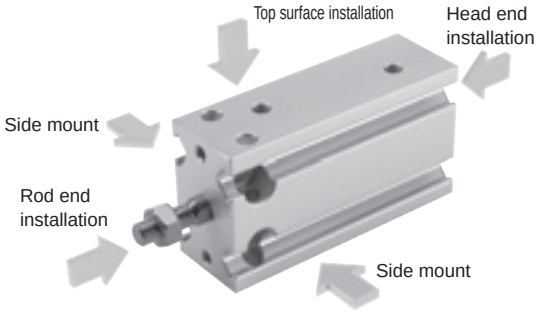

A detection switch fits in completely

A detection switch fits almost flush into the body.

Flat and hardly protruding from the surface

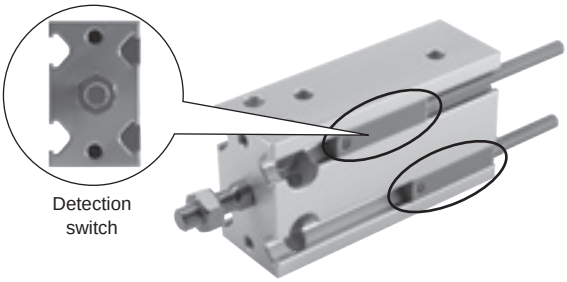

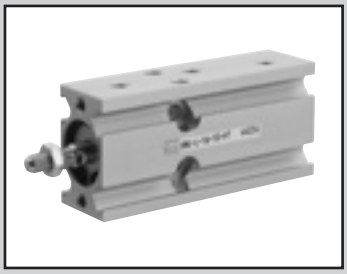

Compact cylinder double acting/single rod

SMG Series

● Bore size: ø6/ø10/ø16/ø20/ø25

JIS symbol

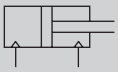

Double acting

RoHS

Structure and material restriction

	Structure	Material restriction			Model No.
P7 Series (custom order product)	Exhaust treatment				P7
	Vacuum treatment				P71
P5 Series (custom order product)	Exhaust treatment	Copper-based materials prohibited	Silicon-based materials prohibited	Halogen-based materials prohibited (fluorine, chlorine, bromine)	P5
	Vacuum treatment	Copper-based materials prohibited	Silicon-based materials prohibited	Halogen-based materials prohibited (fluorine, chlorine, bromine)	P51

Specifications

Descriptions	SMG-P7*/P5* SMG-L-P7*/P5* (with switch)				
Bore size mm	ø6	ø10	ø16	ø20	ø25
Actuation	Double acting				
Working fluid	Compressed air				
Max. working pressure MPa	0.7				
Min. working pressure MPa	0.12*	0.06		0.05	
Proof pressure MPa	1.05				
Ambient temperature °C	-10 to 60 (no freezing)				
Port size	M5				
Port size (relief port)	M5				
Stroke tolerance mm	+1.5 0				
Working piston speed mm/s	50 to 500				
Cushion	With rubber cushion				
Lubrication	Not available				
Allowable energy absorption J	0.012	0.036	0.1	0.1	0.19

*0.12 (≈17 psi, 1.2 bar)

Stroke length

Bore size (mm)	Standard stroke length (mm)	Max. stroke length (mm)	Min. stroke length (mm)
ø6	5/10/15/20/25/30	30	5
ø10			
ø16			
ø20	5/10/15/20/25/30/40/50	50	
ø25			

*1: Custom stroke length is available per 5 mm.

Min. stroke with switch

Bore size	1-color display		2-color display	
	K□H	K□V	K□YH	K□YV
ø6	5		5	
ø10				
ø16				
ø20				
ø25				

Switch specifications

● 1-color/2-color display

Descriptions	Proximity 2-wire		Proximity 3-wire			Reed 2-wire			
	K2H/K2V	K2YH/K2YV	K3H/K3V	K3PH/K3PV (custom order)	K3YH/K3YV	K0H/K0V		K5H/K5V	
Applications	Programmable controller		Programmable controller, relay			Programmable controller, relay		Programmable controller, relay IC circuit (without indicator lamp), serial connection	
Output method	-		NPN output	PNP output	NPN output	-			
Power supply voltage	-		10 to 28 VDC			-			
Load voltage	10 to 30 VDC		30 VDC or less			12/24 VDC	110 VAC	5/12/24 VDC	110 VAC
Load current	5 to 20 mA (*2)		50 mA or less			5 to 50 mA	7 to 20 mA	50 mA or less	20 mA or less
Indicator lamp	LED (Lit when ON)	Red/green LED (Lit when ON)	LED (Lit when ON)	Yellow LED (Lit when ON)	Red/green LED (Lit when ON)	LED (Lit when ON)		-	
Leakage current	1 mA or less		10 μA or less			0 mA			
Weight g	1 m: 18 3 m: 49 5 m: 80	1 m: 31 3 m: 85 5 m: 139	1 m: 18 3 m: 49 5 m: 80		1 m: 31 3 m: 85 5 m: 139	1 m: 18 3 m: 49 5 m: 80			

*1: Refer to page 309 for detailed switch specifications and Dimensions.
*2: Max. load current: 20mA at 25°C.The current is lower than 25 mA if the operating ambient temperature around the switch is higher than 20˚C. (60 to 5 mA at 10°C)

Cylinder weight

Unit (g)

Model No. / Bore size	Product weight when stroke length (S) = 0 mm		Additional weight per S = 5 mm
	SMG-P7*/P5* Double acting	SMG-L-P7*/P5* Double acting with switch	
ø6	26	26	3
ø10	36	36	3
ø16	60	75	6
ø20	123	151	11
ø25	216	260	17

Example: Product weight
SMG-L-16-10-K2H-D-P7
● Product weight for 0 mm stroke length ...75 g
● Additional weight when S = 10 mm .....6 g × 10/5 = 12 g
● Weight of 2 cylinder switches .....18 g × 2 = 36 g
● Product weight .....75 g + 12 g + 36 g = 123 g

Theoretical thrust table

(Unit: N)

Bore size (mm)	Operating direction	Working pressure MPa							
		0.1	0.15	0.2	0.3	0.4	0.5	0.6	0.7
ø6	Push	-	4.24	5.65	8.48	11.3	14.1	17.0	19.8
	Pull	-	3.18	4.24	6.36	8.48	10.6	12.7	14.8
ø10	Push	7.85	11.8	15.7	23.6	31.4	39.3	47.1	55.0
	Pull	6.60	9.90	13.2	19.8	26.4	33.0	39.6	46.2
ø16	Push	20.1	30.2	40.2	60.3	80.4	1.01×10^2	1.21×10^2	1.41×10^2
	Pull	17.3	25.9	34.6	51.8	69.1	86.4	1.04×10^2	1.21×10^2
ø20	Push	31.4	47.1	62.8	94.2	1.26×10^2	1.57×10^2	1.88×10^2	2.20×10^2
	Pull	26.4	39.6	52.8	79.2	1.06×10^2	1.32×10^2	1.58×10^2	1.85×10^2
ø25	Push	49.1	73.6	98.2	1.47×10^2	1.96×10^2	2.45×10^2	2.95×10^2	3.44×10^2
	Pull	41.2	61.9	82.5	1.24×10^2	1.65×10^2	2.06×10^2	2.47×10^2	2.89×10^2

SCPD3
SCM
SSD2
MDC2
SMG
LCM
LCR
LCG
LCX
STM
STG
STR2
MRL2
GRC
Cylinder switch
MN3E MN4E
4GA/B
M4GA/B
MN4GA/B
F.R (module unit)
Clean F.R
Precision R
Press gauge Diff. press gauge
Electro-pneumatic R
Speed controller
Auxiliary valve
Fitting/ tube
Clean air unit
Pressure sensor
Flow rate sensor
Valve for air blow
Ending

How to order

Without switch (without magnet for switch)

SMG - 25 - 25 ———— P7

With switch (built-in magnet for switch)

SMG-L - 25 - 25 - K2H - R - P7

Ⓐ Model No.
Ⓑ Bore size
Ⓒ Stroke length
Ⓓ Switch model No.
Ⓔ Switch quantity
Ⓕ Clean room specifications

Code	Content
Ⓐ Model No.	
SMG	Double acting
SMG-L	Double acting with switch

Ⓑ Bore size (mm)	
6	ø6
10	ø10
16	ø16
20	ø20
25	ø25

Ⓒ Stroke length (mm)		**Applicable bore size**				
		ø6	**ø10**	**ø16**	**ø20**	**ø25**
Standard stroke length	**5**	●	●	●	●	●
	10	●	●	●	●	●
	15	●	●	●	●	●
	20	●	●	●	●	●
	25	●	●	●	●	●
	30	●	●	●	●	●
	40				●	●
	50				●	●

Ⓓ Switch model No.

Lead wire straight	Lead wire L-shaped	Contact	Voltage AC	Voltage DC	Indicator	Lead wire
K0H*	**K0V***	Reed	●	●	1-color display	2 wires
K5H*	**K5V***		●	●	Without indicator lamp	
K2H*	**K2V***	Proximity		●	1-color display	2 wires
K3H*	**K3V***			●		3 wires
K3PH*	**K3PV***			●	1-color display (custom order product)	3 wires
K2YH*	**K2YV***			●	2-color display	2 wires
K3YH*	**K3YV***			●		3 wires

*** Lead wire length**	
Blank	1 m (standard)
3	3 m
5	5 m

Ⓔ Switch quantity	
R	1 (on rod end)
H	1 (on head end)
D	2

Ⓕ Clean room specifications		
	Structure	Material restriction
P7	Exhaust treatment	-
P71	Vacuum treatment	-
P5	Exhaust treatment	Copper-based/silicon-based/halogen-based materials (fluorine, chlorine, bromine) are prohibited
P51	Vacuum treatment	Copper-based/silicon-based/halogen-based materials (fluorine, chlorine, bromine) are prohibited

Precautions for model No. selection

*1: Refer to page 76 for the minimum stroke length with switch.
*2: Refer to page 74 for combinations of variations/options.

[Example of model No.]

SMG-L-6-15-K0H-R-P7

Model: Compact cylinder

Ⓐ Model No. : Double acting with switch
Ⓑ Bore size : ø6 mm
Ⓒ Stroke length : 15 mm
Ⓓ Switch model No. : Reed K0H switch, lead wire length 1 m
Ⓔ Switch quantity : 1 (on rod end)
Ⓕ Clean room specifications : Exhaust treatment

How to order switch

SW - K2H

Switch model No.
(Item Ⓓ above)

Dimensions

● Double acting/single rod SMG- (L) -P7*/P5*

• ø6/ø10

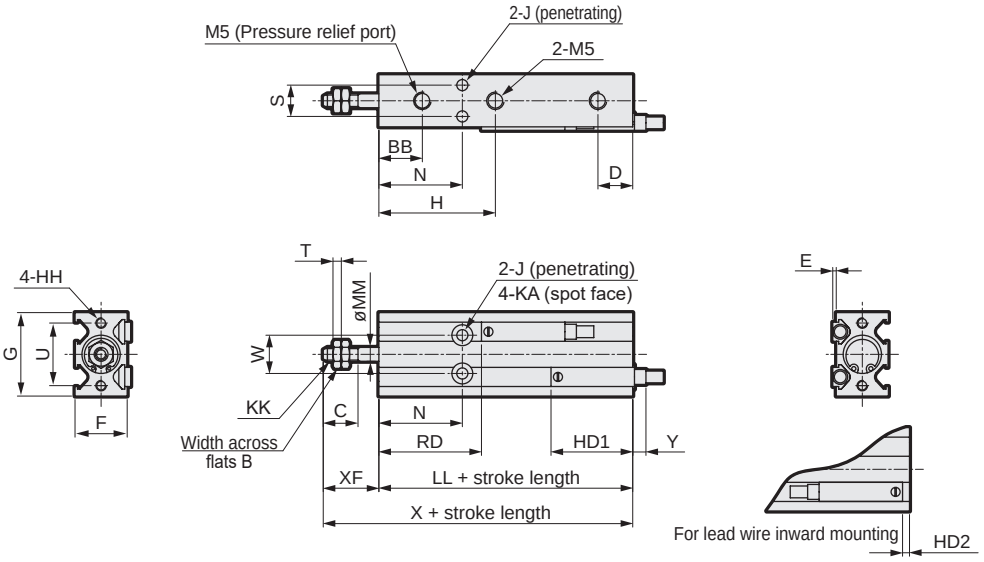

• ø16/ø20/ø25

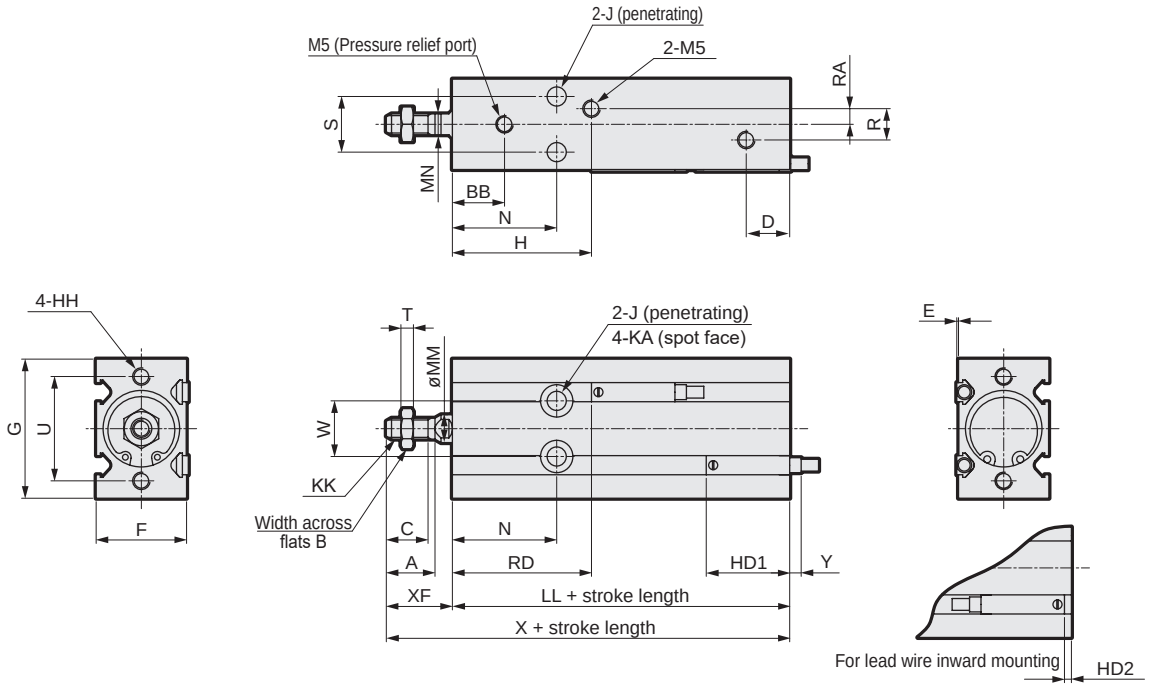

Code / Bore size	A	B	BB	C	D	F	G	H	HH	J	KA	KK	MM	MN	N	R	RA	S	T	U	W
ø6	-	5.5	15	7	10	13	22	31	M3 depth 5	3.2	6 depth 4.8	M3	3	-	23	-	-	7	1.8	17	10
ø10	-	7	12.5	10	10	15	24	33.5	M3 depth 5	3.2	6 depth 5	M4	4	-	24	-	-	9	2.4	18	11
ø16	12.5	8	12	11	11.5	20	32	(*1) 36.5	M4 depth 6	4.5	7.6 depth 6.5	M5	6	5	27	4	2	12	3.2	25	14
ø20	14	10	15	12	12.5	26	40	40	M5 depth 8	5.5	9.3 depth 8	M6	8	6	30	9	4.5	16	3.6	30	16
ø25	18	13	15	15.5	13	32	50	40.5	M5 depth 8	5.5	9.3 depth 9	M8	10	8	29	9	4.5	20	5	38	20

Code / Bore size	XF	LL		X		E	HD1	HD2	RD	Y
		Without switch	With switch	Without switch	With switch					
ø6	13	49	49	62	62	1	20	1	29	7
ø10	16	53	53	69	69	1	23.5	4.5	29.5	3.5
ø16	16	50	60	66	76	0.5	24.5	5.5	35.5	2.5
ø20	19	57	67	76	86	0.5	27	8	40	0
ø25	23	59	69	82	92	0.5	29	10	40	-2

*1: 34.5 for 5 stroke length without switch
*2: Y dimensions indicate the projection dimensions from the end surface of the switch body. (Negative dimensions indicate the pull dimensions from the end surface of the body)
*3: To calculate LL+ stroke length or X+ stroke length when using custom stroke length, apply the next longer standard stroke length (instead of the custom stroke length) to the stroke length value. (Example: If the custom stroke length is 35 mm, apply the standard stroke length of 40 mm)

SCPD3
SCM
SSD2
MDC2
SMG
LCM
LCR
LCG
LCX
STM
STG
STR2
MRL2
GRC
Cylinder switch
MN3E MN4E
4GA/B
M4GA/B
MN4GA/B
F.R (module unit)
Clean F.R
Precision R
Press gauge Diff. press gauge
Electro-pneumatic R
Speed controller
Auxiliary valve
Fitting/ tube
Clean air unit
Pressure sensor
Flow rate sensor
Valve for air blow
Ending

Dimensions (2-color display switch)

● SMG-L (with switch: K2Y$^{H}/_{V}$, K3Y$^{H}/_{V}$)

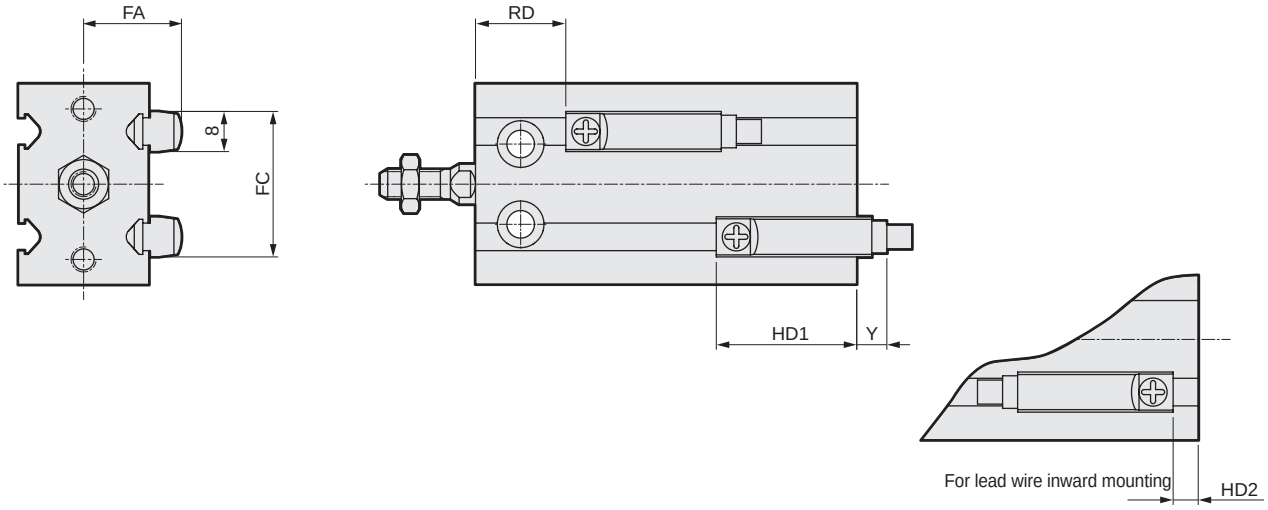

Code / Bore size	FA	FC	Double acting/clean room specifications (P7*/P5*)				
			HD1	HD2	RD	Y	
						Lead wire straight	Lead wire L-shaped
ø6	13.5	18	21	0	28	13	10
ø10	14.5	21	24.5	3.5	28.5	9.5	6.5
ø16	16.5	27	25.5	4.5	34.5	8.5	5.5
ø20	19.5	29	28	7	39	6	3
ø25	22.5	32	30	9	39	4	1

*1: Y dimensions indicate the projection dimensions from the end surface of the switch body. (Negative dimensions indicate the pull dimensions from the end surface of the body)

MEMO

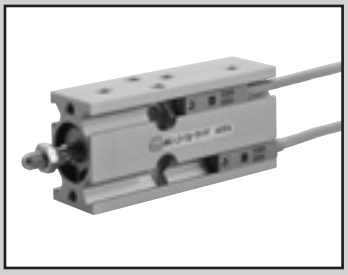

Compact cylinder/double acting/fine speed

SMG-F Series (made to order)

● Bore size: ø6/ø10/ø16/ø20/ø25

JIS symbol

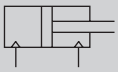

Double acting

Structure and material restriction

	Structure	Model No.
P7 Series	Exhaust treatment	P7
	Vacuum treatment	P71

Specifications

Descriptions	SMG-F-P7* SMG-LF-P7* (with switch)				
Bore size mm	ø6	ø10	ø16	ø20	ø25
Actuation	Double acting				
Working fluid	Compressed air				
Max. working pressure MPa	0.7				
Min. working pressure MPa	0.12	0.06		0.05	
Proof pressure MPa	1.05				
Ambient temperature °C	5 to 60				
Port size	M5				
Port size (relief port)	M5				
Stroke tolerance mm	+1.5 0				
Working piston speed mm/s	1 to 200				
Cushion	With rubber cushion				
Lubrication	Lubrication not possible				
Allowable energy absorption J	0.012	0.036	0.1	0.1	0.19

Stroke length

Bore size (mm)	Standard stroke length (mm)	Min. stroke length (mm)
ø6	5/10/15/20/25/30	30
ø10		
ø16		
ø20	5/10/15/20/25/30/40/50	50
ø25		

*1: The custom stroke length is available by 5 mm increments.

Min. stroke with switch

Bore size	1-color display		2-color display	
	K*H	K*V	K*YH	K*YV
ø6	5		5	
ø10				
ø16				
ø20				
ø25				

Switch specifications

● 1-color/2-color display

Descriptions	Proximity 2-wire		Proximity 3-wire			Reed 2-wire			
	K2H/K2V	K2YH/K2YV	K3H/K3V	K3PH/K3PV (custom order)	K3YH/K3YV	K0H/K0V		K5H/K5V	
Applications	Programmable controller		Programmable controller, relay			Programmable controller, relay		Programmable controller, relay IC circuit (without indicator lamp), serial connection	
Output method	-		NPN output	PNP output	NPN output	-			
Power supply voltage	-		10 to 28 VDC			-			
Load voltage	10 to 30 VDC		30 VDC or less			12/24 VDC	110 VAC	5/12/24 VDC	110 VAC
Load current	5 to 20 mA (*2)		50 mA or less			5 to 50 mA	7 to 20 mA	50 mA or less	20 mA or less
Indicator lamp	LED (Lit when ON)	Red/green LED (Lit when ON)	LED (Lit when ON)	Yellow LED (Lit when ON)	Red/green LED (Lit when ON)	LED (Lit when ON)		-	
Leakage current	1 mA or less		10 μA or less			0 mA			
Weight g	1 m: 18 3 m: 49 5 m: 80	1 m: 31 3 m: 85 5 m: 139	1 m: 18 3 m: 49 5 m: 80	1 m: 31 3 m: 85 5 m: 139		1 m: 18 3 m: 49 5 m: 80			

*1: Refer to page 309 for detailed switch specifications and dimensions.
*2: Max. load current: 20mA at 25°C.The current is lower than 25 mA if the operating ambient temperature around the switch is higher than 20˚C.
(60 to 5 mA at 10°C)

Theoretical thrust table

(Unit: N)

Bore size (mm)	Operating direction	Working pressure MPa							
		0.1	0.15	0.2	0.3	0.4	0.5	0.6	0.7
ø6	Push	-	4.24	5.65	8.48	11.3	14.1	17.0	19.8
	Pull	-	3.18	4.24	6.36	8.48	10.6	12.7	14.8
ø10	Push	7.85	11.8	15.7	23.6	31.4	39.3	47.1	55.0
	Pull	6.60	9.90	13.2	19.8	26.4	33.0	39.6	46.2
ø16	Push	20.1	30.2	40.2	60.3	80.4	1.01×10^2	1.21×10^2	1.41×10^2
	Pull	17.3	25.9	34.6	51.8	69.1	86.4	1.04×10^2	1.21×10^2
ø20	Push	31.4	47.1	62.8	94.2	1.26×10^2	1.57×10^2	1.88×10^2	2.20×10^2
	Pull	26.4	39.6	52.8	79.2	1.06×10^2	1.32×10^2	1.58×10^2	1.85×10^2
ø25	Push	49.1	73.6	98.2	1.47×10^2	1.96×10^2	2.45×10^2	2.95×10^2	3.44×10^2
	Pull	41.2	61.9	82.5	1.24×10^2	1.65×10^2	2.06×10^2	2.47×10^2	2.89×10^2

Weight

Same as SMG Series (double acting/single rod). Refer to page 77.

Dimensions

Same as SMG Series (double acting/single rod). Refer to page 79 to 80.

SCPD3
SCM
SSD2
MDC2
SMG
LCM
LCR
LCG
LCX
STM
STG
STR2
MRL2
GRC
Cylinder switch
MN3E MN4E
4GA/B
M4GA/B
MN4GA/B
F.R (module unit)
Clean F.R
Precision R
Press gauge Diff. press gauge
Electro-pneumatic R
Speed controller
Auxiliary valve
Fitting/ tube
Clean air unit
Pressure sensor
Flow rate sensor
Valve for air blow
Ending

How to order

Without switch (No magnet for switch)

SMG-F - 25 - 25 ——— P7

With switch (Magnet for switch incorporated)

SMG-LF - 25 - 25 - K2H - R - P7

Ⓐ Model No.
Ⓑ Bore size
Ⓒ Stroke length
Ⓓ Switch model No.
Ⓔ Switch quantity
Ⓕ Clean room specifications

Code	Content
Ⓐ Model No.	
SMG-F	Double acting/fine speed
SMG-LF	Double acting/fine speed with switch

Ⓑ Bore size (mm)	
6	ø6
10	ø10
16	ø16
20	ø20
25	ø25

Ⓒ Stroke (mm)		**Applicable bore size**				
		ø6	**ø10**	**ø16**	**ø20**	**ø25**
Standard stroke	**5**	●	●	●	●	●
	10	●	●	●	●	●
	15	●	●	●	●	●
	20	●	●	●	●	●
	25	●	●	●	●	●
	30	●	●	●	●	●
	40				●	●
	50				●	●

Ⓓ Switch model No.

Lead wire straight	Lead wire L-shaped	Contact	Voltage AC	Voltage DC	Indicator	Lead wire
K0H*	**K0V***	Reed	●	●	1-color display	2 wires
K5H*	**K5V***		●	●	Without indicator lamp	
K2H*	**K2V***	Proximity		●	1-color display	2 wires
K3H*	**K3V***			●		3 wires
K3PH*	**K3PV***			●	1-color display (custom order product)	3 wires
K2YH*	**K2YV***			●	2-color display	2 wires
K3YH*	**K3YV***			●		3 wires

*** Lead wire length**	
Blank	1 m (standard)
3	3 m
5	5 m

Ⓔ Switch quantity	
R	1 (on rod end)
H	1 (on head end)
D	2

Ⓕ Clean room specifications	
	Structure
P7	Exhaust treatment
P71	Vacuum treatment

Precautions for model No. selection

*1: Refer to page 82 for the minimum stroke length with switch.
*2: Refer to page 74 for combinations of variations/options.

[Example of model No.]

SMG-LF-6-15-K0H-R-P7

Model: Compact cylinder

Ⓐ Model No. : Double acting/fine speed with switch
Ⓑ Bore size : ø6 mm
Ⓒ Stroke length : 15 mm
Ⓓ Switch model No. : Reed K0H switch, lead wire length 1 m
Ⓔ Switch quantity : 1 (on rod end)
Ⓕ Clean room specifications : Exhaust treatment

How to order switch

SW - K2H

↓

Switch model No.
(Item Ⓓ above)

MEMO

Safety Precautions

Always read this section before use.

Refer to page 2 for general information of the cylinder, and to page 320 for general information of the cylinder switch.

Compact cylinder SMG Series

Design & selection

1. Common

CAUTION

The minimum working pressure in the specifications column indicates the initial value. Depending on the conditions of use or duration of use, the specifications may be exceeded. When using around the minimum working pressure, contact CKD.

2. Fine speed SMG-F

CAUTION

■ Use without lubrication.

Applying lubrication may cause changes in characteristics.

■ Assemble the speed controller near the cylinder.

When installed far from the cylinder, the speed becomes unstable.
For the speed controller, SC-M3/M5-F, SCD-M3/M5-F Series are recommended.

■ Assemble the speed controller near the cylinder.

When installed far from the cylinder, the speed becomes unstable.
For the speed controller, SC-M3/M5-F, SCD-M3/M5-F Series are recommended.

■ Stable speed control is achieved with a meter-out circuit.

When fine speed activation is performed with operating direction PUSH for the single rod cylinder, the popping out phenomenon occurs when operation starts if the load resistance is low. For countermeasures, use the ⓑ, ⓒ, or ⓓ circuit. Note that circuit ⓓ is the most stable.

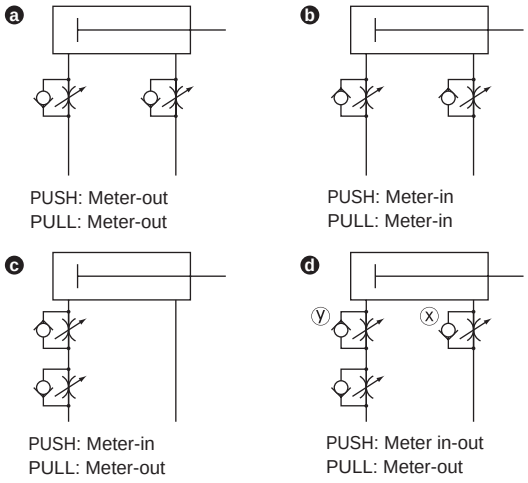

Speed adjustment method for PUSH operation of ⓓ circuit:
1. Set the speed with the speed controller x.
2. Restrict the speed with the speed controller y until there is no popping out.
3. Check the speed again.

(*1) When comparing ⓑ ⓒ ⓓ, the circuit ⓓ is the most stable.

(*2) For vertical mounting, combine the cylinder with a meter-out circuit, as it will fall under its own weight when a meter-in circuit is used.

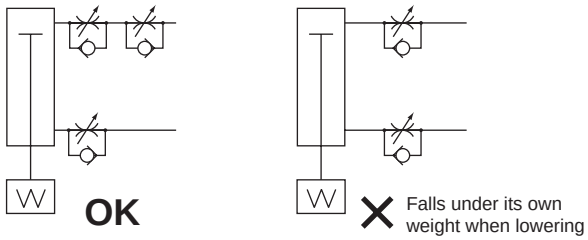

(*3) Use the circuit as shown in the figure below for the serial connection of the speed controllers.

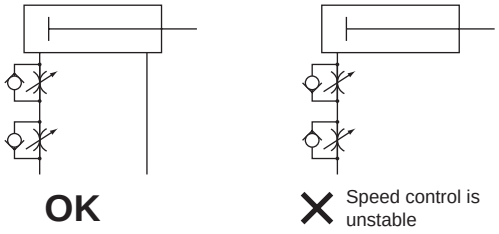

(Occurrence of popping out)

When the following condition is met, popping out could occur.

• Thrust > Resistance

* Resistance: a force produced by a residual pressure on the outlet side (for fine speed, Inlet pressure = Residual pressure) + { For vertical use: friction caused by the load / For horizontal use: self-weight of the load

■ Do not apply a lateral load to the cylinder.

With a lateral load, operation will become unstable.

■ Avoid using the products where vibration is present.

The product will be adversely affected by vibration and operation will become unstable.

Mounting, installation & adjustment

1. Common

⚠ CAUTION

■ The cylinder switch may malfunction if there is a magnetic substance such as a metal plate installed adjacently. Check that a distance of 3.5 mm is provided from the surface of the cylinders.
(Same for all bore sizes)

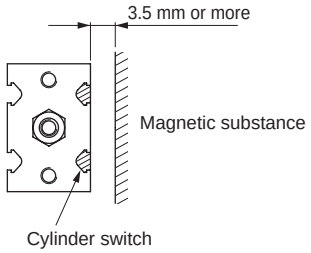

■ The cylinder switch may malfunction when cylinders are installed adjacently. In order to prevent switch malfunctions, provide a mounting pitch value according to the table below and the next page.

Unit: mm

Adjacent conditions			Switch model No.	ø6	ø10	ø16	ø20	ø25	Remarks
Two cylinders in parallel	• Horizontal mounting 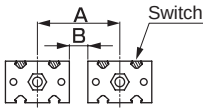	A	K0, K5	27	29	37	45	55	
			K2, K3						
		B	K0, K5	4.5					
			K2, K3						
	• Vertical mounting Switches are attached on the opposite side of the horizontal cylinders 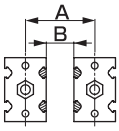	A	K0, K5	28	21	25	33	41	Note that switch position cannot be adjusted if the length of the screwdriver is longer than B dimension with cylinders mounted.
			K2, K3	25	28	35	40	50	
		B	K0, K5	5.5	5.5	5.5	6.5	8.5	
			K2, K3	11.5	12.5	14.5	14.5	17.5	
	• Vertical mounting Switches are attached on the side of the adjacent cylinders 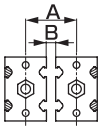	A	K0, K5	14	16	21	27	33	
			K2, K3						
		B	K0, K5	0.5					
			K2, K3						
More than two cylinders in parallel	• Horizontal mounting 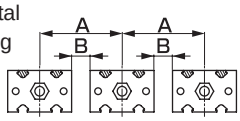	A	K0, K5	27	29	37	45	55	
			K2, K3						
		B	K0, K5	4.5					
			K2, K3						
	• Vertical mounting 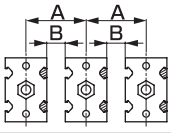	A	K0, K5	19	22	26	34	42	Note that switch position cannot be adjusted if the length of the screwdriver is longer than B dimension with cylinders mounted.
			K2, K3	27	29	35	44	51	
		B	K0, K5	6.5	6.5	6.5	7.5	9.5	
			K2, K3	13.5	13.5	14.5	17.5	18.5	

■ Depending on the stroke length or mounting method, compatible piping fittings are limited. Use the following recommended fittings.

Fig. 1

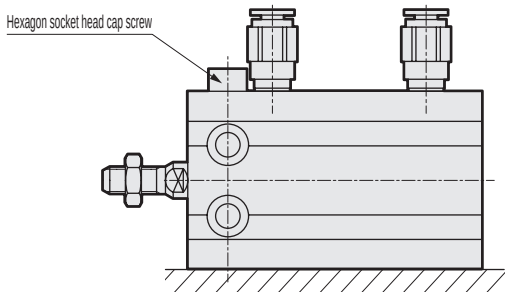

Descriptions / Port size	Port size	Recommended fittings
6	M5	SC3W-M5-4,6-P7* GWS4-M5-P7* GWS6-M5-P7* (*1) GWS4,6-M5-S-P7* GWL4-M5-P7* GWL6-M5-P7* (*1)
10	M5	SC3W-M5-4,6-P7* GWS4,6-M5-P7* GWS4,6-M5-S-P7* GWL4,6-M5-P7*
16	M5	SC3W-M5-4,6-P7* GWS4-M5-P7* (*1) GWS6-M5-P7* (*2) GWS4-M5-S-P7* GWS6-M5-S-P7* (*1) GWL4-M5-P7* (*1) GWL6-M5-P7* (*2)
20	M5	SC3W-M5-4,6-P7* GWS4-M5-P7* GWS6-M5-P7* (*1) GWS4,6-M5-S-P7* GWL4-M5-P7* GWL6-M5-P7* (*1)
25	M5	SC3W-M5-4,6-P7* GWS4,6-M5-P7* GWS4,6-M5-S-P7* GWL4,6-M5-P7*

*1: Excluding the case of 5 stroke length or mounting method in "Fig. 1".
*2: Excluding the case of 5,10 stroke length or mounting method in "Fig. 1".

■ When mounting the body with a through bolt, tighten the bolts to the tightening torque specified in the table below.

Port size	Applicable bolts	Tightening torque
ø6/10	M3	0.6 to 1.1 N·m
ø16	M4	1.5 to 2.7 N·m
ø20/25	M5	3.0 to 5.4 N·m

2. Fine speed SMG-F

⚠ CAUTION

■ Perform adjustment such as centering so that a lateral load is not applied to the cylinder.
In addition, install and adjust the sliding guide to avoid twisting.

- When the load or the resistance fluctuates, operation becomes unstable.
- With a large difference between static friction and kinematic friction of the guide, operation becomes unstable.

SCPD3
SCM
SSD2
MDC2
SMG
LCM
LCR
LCG
LCX
STM
STG
STR2
MRL2
GRC
Cylinder Switch
MN3E MN4E
4GA/B
M4GA/B
MN4GA/B
F.R.(module unit)
Clean F.R
Precision R
Press gauge Diff. press gauge
Electro-pneumatic R
Speed controller
Auxiliary valve
Fitting/ tube
Clean air unit
Pressure sensor
Flow rate sensor
Valve for air blow
Ending

MEMO

LCM

Linear slide cylinder

Combined functions

ø4.5/ø6/ø8

CONTENTS

Product introduction 92

● **Double acting/single rod clean room specifications (LCM-P73) 94**

Selection guide 101

Technical data 102

⚠ Safety precautions 103

Compact, high-precision actuator

Ultra-compact, high-precision, rigid Linear slide cylinder LCM Series (ø4.5/ø6/ø8)

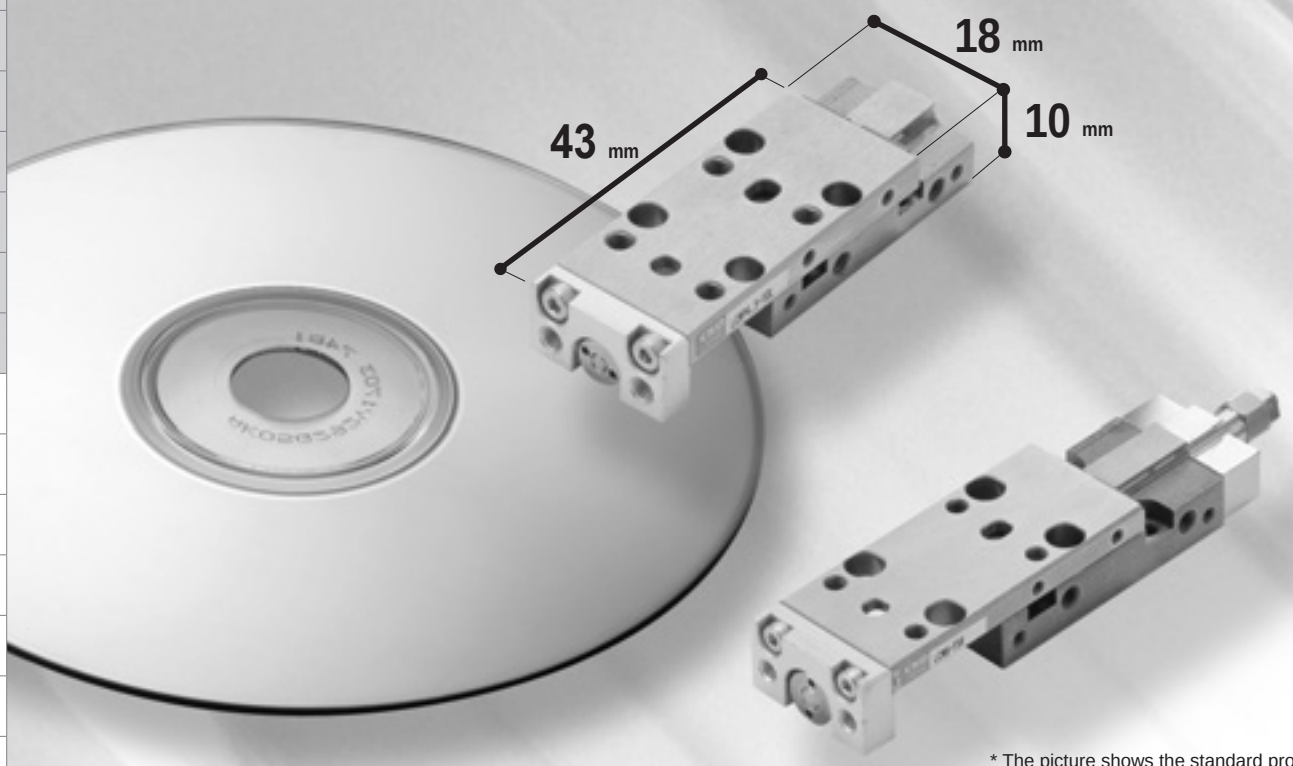

* The picture shows the standard product.

High-precision positioning

0.005 mm* parallelism during movement and 0.03 mm parallelism of installation is suitable for high-precision positioning.

* 0.006 mm in some models. Refer to page 102 for details.

Parallelism during movement

0.005mm

0.03mm

Parallelism of installation

Ultracompact body

The cylinder body, linear guide and slide table are all integrated into an extremely small body.

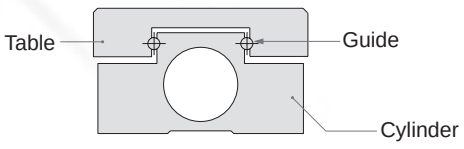

Linear Slide Cylinder LCM Series

Fits in small, tight spaces

The compact body can fit in a narrow, small space allowing for more flexible layout.

A workpiece can be mounted on two sides

A workpiece can be directly mounted on the top and side with the preprocessed mounting holes.

Reliable stainless steel body

The cylinder body and slide table are corrosion-resistant stainless steel.

Resistant to load

Uses linear guide with contact at four points. Withstands load from all directions.

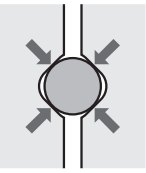

Compatible with 2-color display switch

The 2-color display switch newly added to the ultracompact F switches is available.

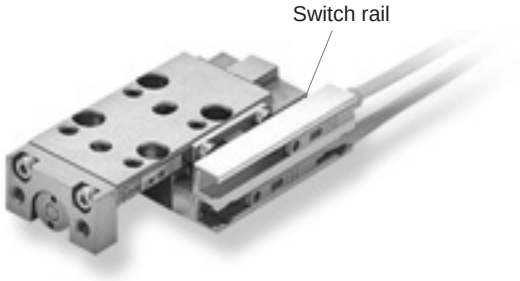

RoHS Directive compliant

Free from environmentally harmful substances such as lead and hexavalent chromium.

RoHS

LCM Series variation

Model variations	Bore size	Stroke (mm)				
		5	10	15	20	30
Double acting/ single rod clean room specifications — LCM-P73	ø4.5	○	○	○	○	○
	ø6	○	○	○	○	○
	ø8	○	○	○	○	○

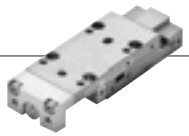

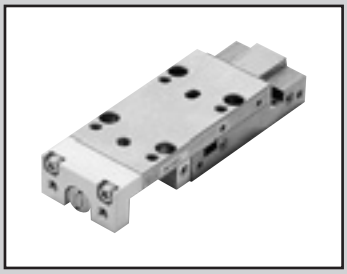

Linear slide cylinder Double acting/single rod Clean room specifications

LCM Series

● Bore size: ø4.5/ø6/ø8

JIS symbol 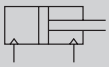

RoHS CAD

Structure and material restriction

	Structure	Model No.
P7 Series	Vacuum treatment	P73

Specifications

Descriptions		LCM -P73		
Bore size	mm	ø4.5	ø6	ø8
Actuation		Double acting		
Working fluid		Compressed air		
Max. working pressure	MPa	0.7		
Min. working pressure	MPa	0.2		0.15
Proof pressure	MPa	1.05		
Ambient temperature	°C	0 to 60		
Port size		M3		
Stroke tolerance	mm	+1.0 0		
Working piston speed	mm/s	30 to 300		
Cushion		None	With rubber cushion	
Lubrication		Not available		
Allowable energy absorption	J	Refer to the table on page 103.		

Stroke length

Bore size (mm)	Standard stroke (mm)	Min. stroke with switch (mm)
ø4.5	5/10	5
ø6	5/10/15/20/30	
ø8	5/10/15/20/30	

*1: Other than standard stroke length is not available.

Switch specifications

Descriptions	Proximity 2-wire	Proximity 3-wire	Proximity 2-wire		Proximity 3-wire		
	F2S	F3S	F2H/F2V	F2YH/F2YV	F3H/F3V	F3PH/F3PV (custom order)	F3YH/F3YV
Applications	Programmable controller	Programmable controller, relay	Programmable controller		Programmable controller, relay		
Output method	-	NPN output	-		NPN output	PNP output	NPN output
Power supply voltage	-	10 to 28 VDC	-		10 to 28 VDC	4.5 to 28 VDC	10 to 28 VDC
Load voltage	10 to 30 VDC	30 VDC or less	10 to 30 VDC	24 VDC ±10%	30 VDC or less		
Load current	5 to 20 mA	50 mA or less	5 to 20 mA (*2)		100 mA or less	50 mA or less	
Indicator lamp	Red LED (Lit when ON)		LED (Lit when ON)	Red/green LED (Lit when ON)	LED (Lit when ON)	Yellow LED (Lit when ON)	Red/green LED (Lit when ON)
Leakage current	1 mA or less	10 μA or less	1 mA or less		10 μA or less		
Weight g	1 m: 10 3 m: 29						

*1: Refer to page 309 for detailed switch specifications and dimensions.
*2: Max. load current: 20mA at 25°C.The current is lower than 25 mA if the operating ambient temperature around the switch is higher than 20˚C. (60 to 5 mA at 10°C)
*3: The F type switch uses a bend-resistant lead wire.

Cylinder weight

Unit: g

Stroke length (mm)	5		10		15		20		30		Additional weight
Bore size (mm)	Without magnet + switch rail	With magnet + switch rail	Without magnet + switch rail	With magnet + switch rail	Without magnet + switch rail	With magnet + switch rail	Without magnet + switch rail	With magnet + switch rail	Without magnet + switch rail	With magnet + switch rail	Weight per switch
ø4.5	45	49	45	49	-	-	-	-	-	-	Refer to weight information provided in the switch specifications.
ø6	61	66	61	66	69	75	77	83	93	100	
ø8	87	92	87	92	108	114	108	114	129	136	

Theoretical thrust table

Unit: N

Bore size (mm)	Operating direction	Working pressure MPa					
		0.2	0.3	0.4	0.5	0.6	0.7
ø4.5	Push	3.2	4.8	6.4	8.0	9.5	11.1
	Pull	2.6	3.8	5.1	6.4	7.7	8.9
ø6	Push	5.7	8.5	11.3	14.1	17.0	19.8
	Pull	4.2	6.4	8.5	10.6	12.7	14.8
ø8	Push	10.1	15.1	20.1	25.1	30.2	35.2
	Pull	8.6	13.0	17.3	21.6	25.9	30.2

SCPD3
SCM
SSD2
MDC2
SMG
LCM
LCR
LCG
LCX
STM
STG
STR2
MRL2
GRC
Cylinder switch
MN3E MN4E
4GA/B
M4GA/B
MN4GA/B
F.R (module unit)
Clean F.R
Precision R
Press gauge Diff. press gauge
Electro-pneumatic R
Speed controller
Auxiliary valve
Fitting/ tube
Clean air unit
Pressure sensor
Flow rate sensor
Valve for air blow
Ending

How to order

● Without switch (No magnet for switch)

LCM - 6 - 10 - R ——— J2 P73

● With switch (Magnet for switch incorporated)

LCM - 6 - 10 - R - F2H - R - J2 P73

Ⓐ Bore size

Ⓑ Stroke length

Ⓒ Piping direction

Ⓓ Switch model No.

Ⓔ Switch quantity

Ⓕ Option

Ⓖ Clean room specifications

Code	Content
Ⓐ Bore size (mm)	
4.5	ø4.5
6	ø6
8	ø8

Ⓑ Stroke length (mm)

		Bore size		
		ø4.5	**ø6**	**ø8**
5	5	●	●	●
10	10	●	●	●
15	15	-	●	●
20	20	-	●	●
30	30	-	●	●

Ⓒ Piping direction

R	Right from rod end
L	Left from rod end

Ⓓ Switch model No.

Lead wire straight	Lead wire L-shaped	Contact	Voltage AC	Voltage DC	Display	Lead wire
—	**F2S***	Proximity		●	1-color display	2 wires
F2H*	**F2V***			●		
—	**F3S***			●		3 wires
F3H*	**F3V***			●		
F3PH*	**F3PV***			●	1-color display (PNP output) (custom order)	
F2YH*	**F2YV***			●	2-color display	2 wires
F3YH*	**F3YV***			●		3 wires

*** Lead wire length**

Blank	1 m (standard)
3	3 m (option)

Ⓔ Switch quantity

R	1 (on rod end)
H	1 (on head end)
D	2

Ⓕ Option

M	*1	With magnet
F1	*1, 2	With magnet + switch rail (one switch groove)
F2	*1	With magnet + switch rail (two switch grooves)
J*		With positioning pin (*···· the number of pins)

Ⓖ Clean room specifications

P73	Vacuum treatment

⚠ Precautions for model No. selection

*1: Can be omitted if the switch model No. is specified.
*2: Available only for ø4.5.

[Example of model No.]

LCM-6-10-R-F2H-R-J2P73

Model No.: Linear slide cylinder, double acting

Ⓐ Bore size : ø6 mm
Ⓑ Stroke length : 10 mm
Ⓒ Piping direction : Right when viewed from rod end
Ⓓ Switch model No. : Proximity F2H switch, lead wire 1 m
Ⓔ Switch quantity : 1 (on rod end)
Ⓕ Option : With two positioning pins
Ⓖ Clean room specifications : Vacuum treatment

Dimensions

● LCM-4.5-P73

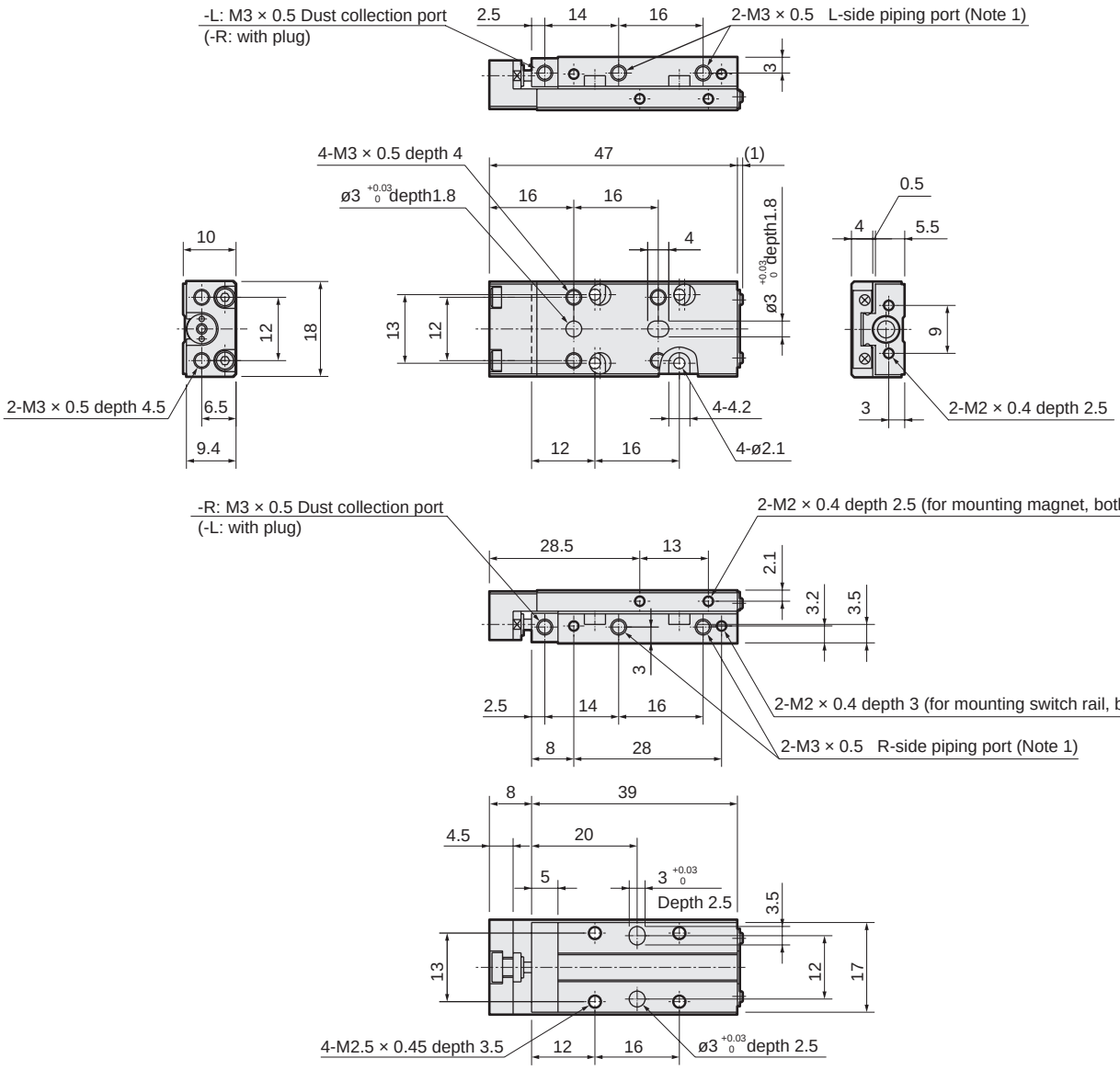

(Note 1) A plug is attached to the opposite side to the piping port specified with the model No.

• With magnet/cylinder switch (piping direction: -R)

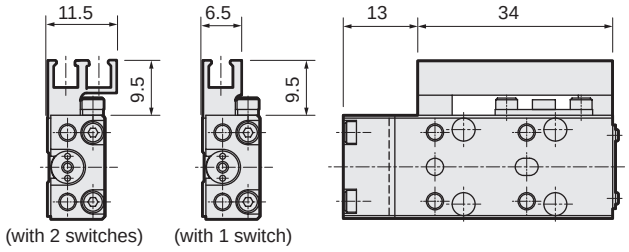

• With magnet/cylinder switch (piping direction: -L)

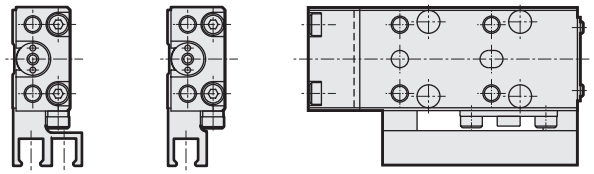

• Positioning pin (-J)

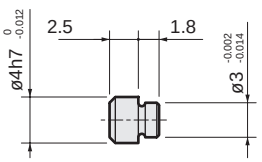

Note: Refer to page 100 for switch mounting position dimensions.

SCPD3
SCM
SSD2
MDC2
SMG
LCM
LCR
LCG
LCX
STM
STG
STR2
MRL2
GRC
Cylinder switch
MN3E MN4E
4GA/B
M4GA/B
MN4GA/B
F.R (module unit)
Clean F.R
Precision R
Press gauge Diff. press gauge
Electro-pneumatic R
Speed controller
Auxiliary valve
Fitting/ tube
Clean air unit
Pressure sensor
Flow rate sensor
Valve for air blow
Ending

Dimensions CAD

● LCM-6-P73

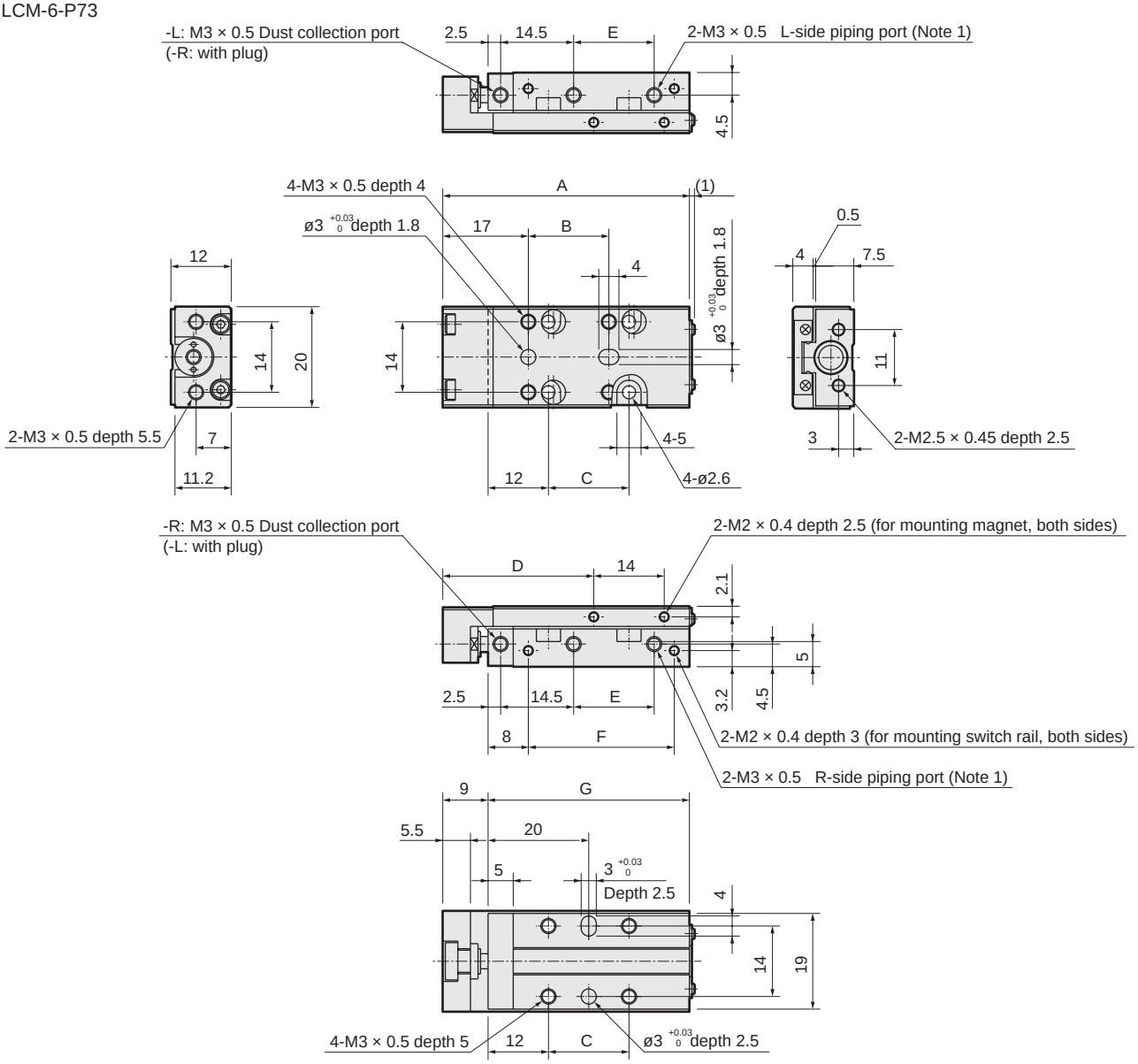

(Note 1) A plug is attached to the opposite side to the piping port specified with the model No.

• With magnet/cylinder switch (piping direction: -R)

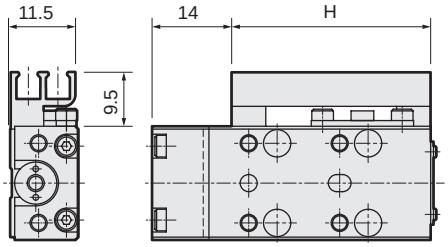

• With magnet/cylinder switch (piping direction: -L)

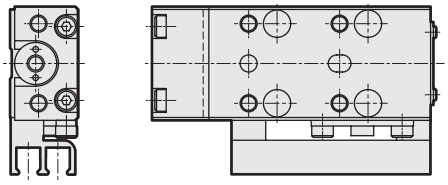

• Positioning pin (-J)

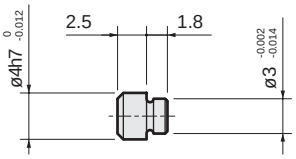

Stroke	A	B	C	D	E	F	G	H
5	49	16	16	30	16	29	40	35
10	49	16	16	30	16	29	40	35
15	54	21	21	35	21	34	45	40
20	59	26	26	40	26	39	50	45
30	69	36	36	50	36	49	60	55

Note: Refer to page 100 for switch mounting position dimensions.

Dimensions

● LCM-8-P73

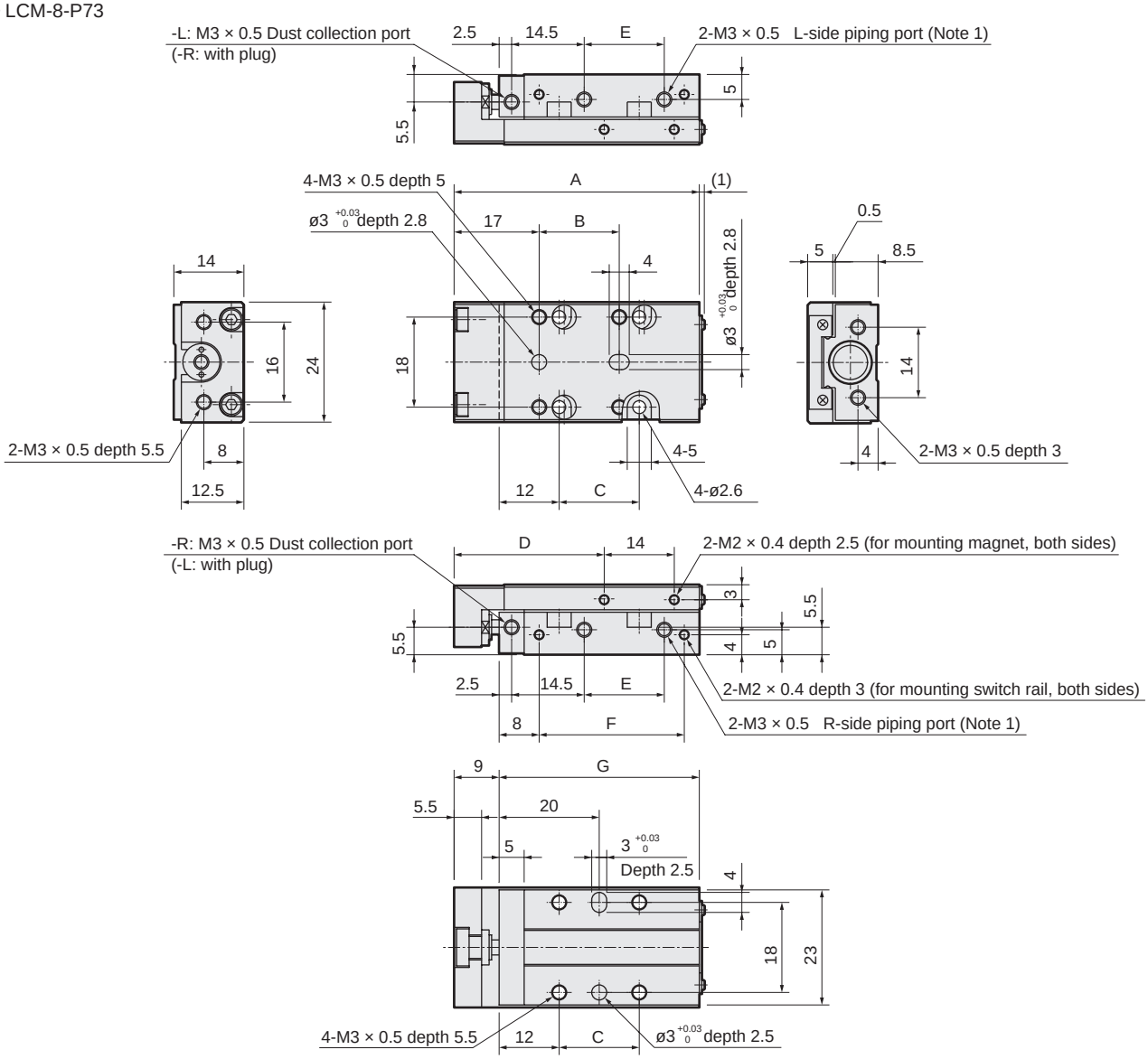

(Note 1) A plug is attached to the opposite side to the piping port specified with the model No.

• With magnet/cylinder switch (piping direction: -R)

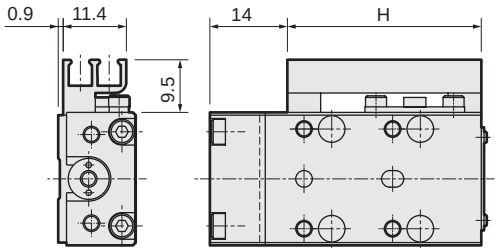

• With magnet/cylinder switch (piping direction: -L)

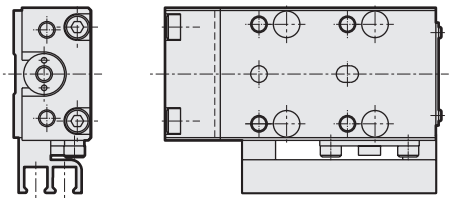

• Positioning pin (-J)

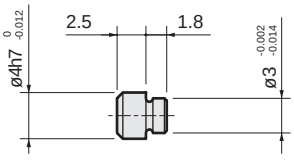

Stroke length	A	B	C	D	E	F	G	H
5	49	16	16	30	16	29	40	35
10	49	16	16	30	16	29	40	35
15	59	26	26	40	26	39	50	45
20	59	26	26	40	26	39	50	45
30	69	36	36	50	36	49	60	55

Note: Refer to page 100 for switch mounting position dimensions.

LCM Series Common projection dimensions with switch

● Lead wire hole on the rear side

• F*H

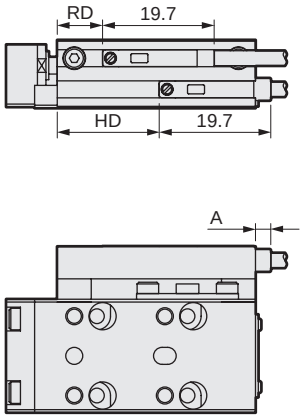

• F*V

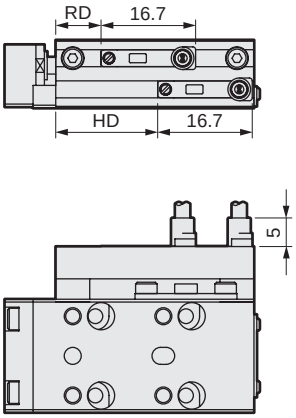

• F*S

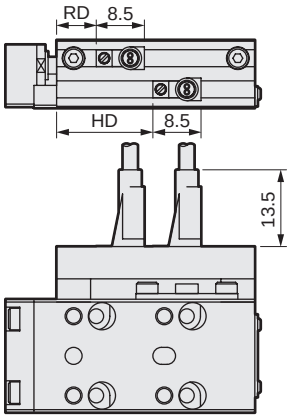

Bore size (mm)	Stroke length	RD			HD			A	
		F*H	F*V	F*S	F*H	F*V	F*S	1-color display	2-color display
ø4.5	5	12	12	11	17	17	16	2.7	7.2
	10	7	7	6	17	17	16		
ø6	5	13	13	12	18	18	17		
	10	8	8	7	18	18	17		
	15	8	8	7	23	23	22		
	20	8	8	7	28	28	27		
	30	8	8	7	38	38	37		
ø8	5	13	13	12	18	18	17		
	10	8	8	7	18	18	17		
	15	13	13	12	28	28	27		
	20	8	8	7	28	28	27		
	30	8	8	7	38	38	37		

● Lead wire hole on the front side

• F*H

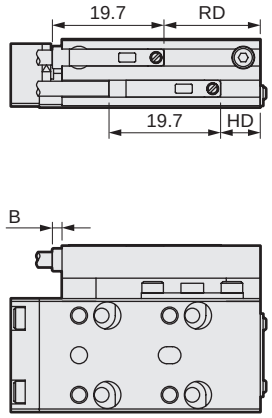

• F*V

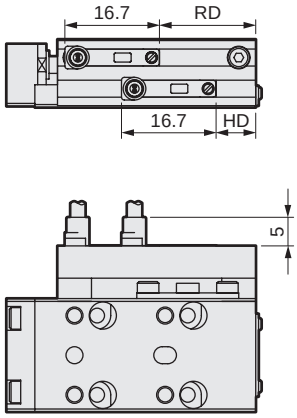

• F*S

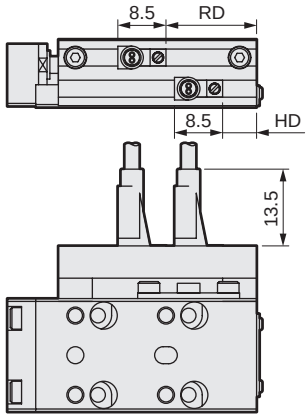

Bore size (mm)	Stroke length	RD			HD			B	
		F*H	F*V	F*S	F*H	F*V	F*S	1-color display	2-color display
ø4.5	5	12	12	11	7	7	6	—	—
	10	17	17	16				1.7	6.2
ø6	5	12	12	11	7	7	6	—	—
	10	17	17	16				1.7	6.2
	15	22	22	21				1.7	6.2
	20	28	27	26				1.7	6.2
	30	37	37	36				1.7	6.2
ø8	5	12	12	11	7	7	6	—	—
	10	17	17	16				1.7	6.2
	15	22	22	21				—	—
	20	27	27	26				1.7	6.2
	30	37	37	36				1.7	6.2

STEP-1

Confirm that the load moment in the full stroke length is within the allowable value in each direction.

• Direction of moment and length to the center of the guide (X)

Direction	Fig.	Formula
M1 moment	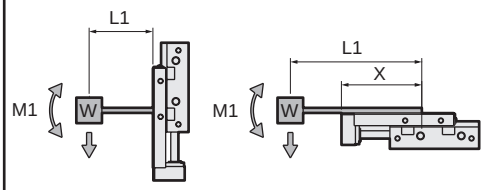	M1 = L1 × W
M2 moment	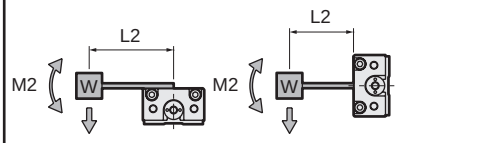	M2 = L2 × W
M3 moment	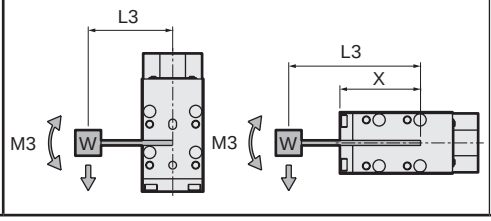	M3 = L3 × W

• Allowable moment

N·m

Model No.	M1	M2	M3
LCM-*-4.5	0.24	0.22	0.29
LCM-*-6	0.28	0.23	0.34
LCM-*-8	0.28	0.38	0.34

• Length to the center of the guide

mm

Model No.	Stroke length	X
LCM-*-4.5	5	35
	10	
LCM-*-6	5	36.5
	10	
	15	41.5
	20	46.5
	30	56.5
LCM-*-8	5	36.5
	10	
	15	46.5
	20	
	30	56.5

* Note that if a workpiece makes contact at a point off the guide during the stroke, the thrust will cause a large moment.

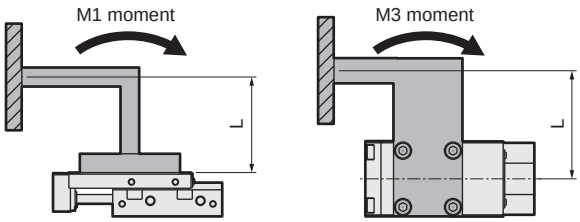

STEP-2

Confirm that the kinetic energy obtained from the load weight of the cylinder and the piston speed is within the allowable absorbed energy.

Bore size	ø4.5	ø6	ø8
Allowable energy absorption J	1.59×10^{-3}	2.83×10^{-3}	5.02×10^{-3}

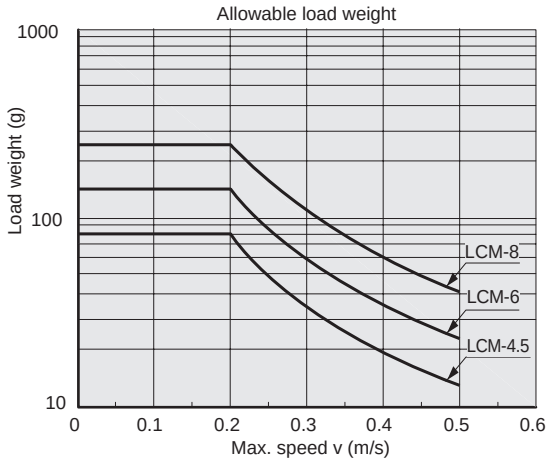

SCPD3
SCM
SSD2
MDC2
SMG
LCM
LCR
LCG
LCX
STM
STG
STR2
MRL2
GRC
Cylinder switch
MN3E MN4E
4GA/B
M4GA/B
MN4GA/B
F.R (module unit)
Clean F.R
Precision R
Press gauge Diff. press gauge
Electro-pneumatic R
Speed controller
Auxiliary valve
Fitting/ tube
Clean air unit
Pressure sensor
Flow rate sensor
Valve for air blow
Ending

Technical data

■ Accuracy of the slide table

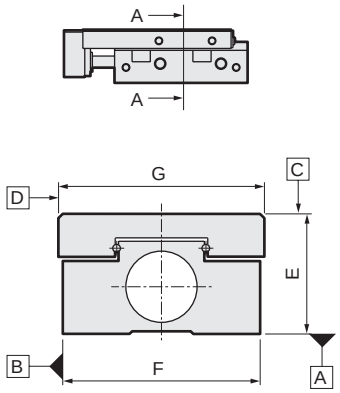

A-A sectional view

mm

Item		LCM-*-4.5 to 8
Parallelism	C-plane against A-plane	0.03
	D-plane against B-plane	0.03
Parallelism during movement	C-plane against A-plane	0.005*
	D-plane against B-plane	0.005*
Tolerance of E		±0.05
Tolerance of F		±0.05
Tolerance of G		±0.05

* 0.006 in LCM-6, 8 with 30 mm stroke

■ Displacement angle of the table due to a bending moment (reference value)

M1 moment

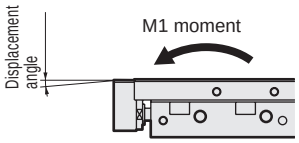

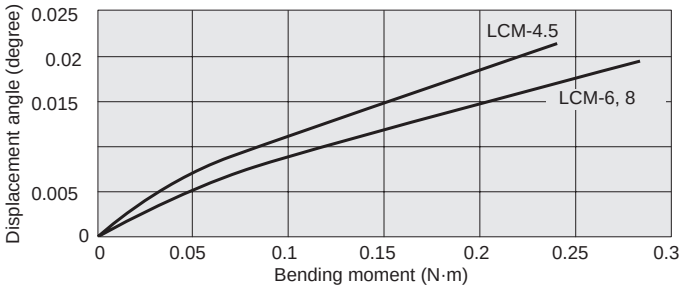

M2 moment

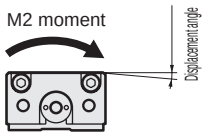

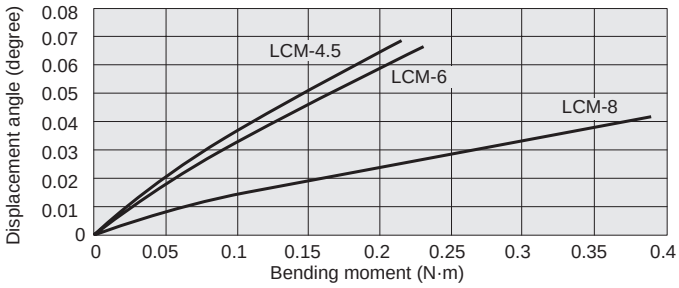

M3 moment

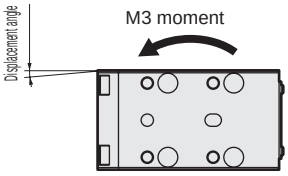

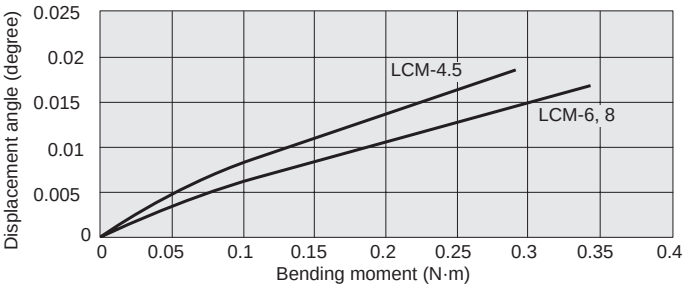

Pneumatic components

Safety Precautions

Be sure to read this section before use.
Refer to page 2 for general information of the cylinder, and to page 320 for general information of the cylinder switch.

Linear slide cylinder LCM Series

Design & selection

1. Common

CAUTION

- When selecting a cylinder, follow the "LCM selection guide" on page 101.
- Protect the cylinder with a cover to prevent damage and malfunction in a place where it is exposed to water or oil drops, or corrosive conditions.
- The stainless steel body and slide table may rust in some environments. Apply an appropriate amount of rust proofing agent oil periodically.
- Switches may accidentally function near a magnetic field. A magnetic substance near the switch may also cause an accidental operation. When setting a magnetic workpiece on the slide table, adjust the size so that it does not get closer to the switch across the table end.
- Putting a strong magnet close to the product may cause magnetization of the product, which may result in an accidental operation of the switch.
- Use the cylinder within the allowable absorbed energy in the table below. If kinetic energy exceeds these values, consider using a separate shock absorber.

Bore size	ø4.5	ø6	ø8
Allowable energy absorption J	1.59×10^{-3}	2.83×10^{-3}	5.02×10^{-3}

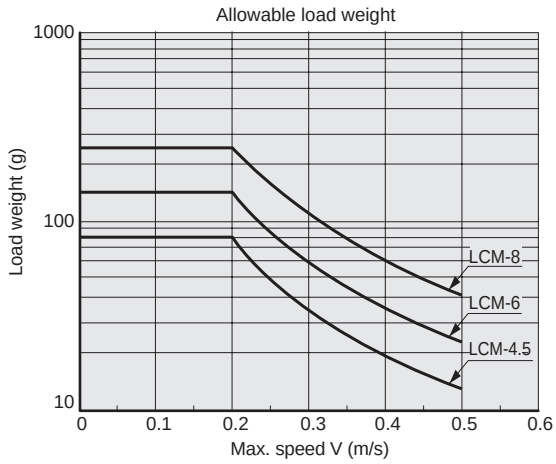

Mounting, installation & adjustment

1. Common: when piping

- Apply adhesive to the M3 plug (hexagon socket set screw) when changing the piping port position. (Low strength adhesives such as LOCTITE 222/221 or Three Bond 1344 is recommended)
  Tighten the plug up to a halfway point so that the screw does not protrude from the port surface and does not reach the bottom of the port.
- As compatible fittings are limited, refer to the table below to select a fitting.

Recommended fittings

Bore size	Recommended fittings
All port sizes	CG-S2-M3
	CG-S2-M3-S
	CG-L2-M3
	FTS4-M3-P80 *2
	FTL4-M3-P80 *2

*1: FTL4-M3 is not available for ø4.5 clean room specifications dust collection port.
*2: Copper-based materials are used. Please refer to page 946 of this catalog.

- Do not damage the surface flatness by denting or scratching the body mounting surface or the slide table surface. Make sure that the flatness of the mating surface for mounting is 0.02 mm or less. Poor flatness may result in lower performance of the guide, higher rolling resistance or shorter service life.
- Use a clearance-fit stepped pin (option) for positioning. If a press-fit pin is used, the load of press fitting may damage the guide and result in failure. Also, if the pin is not stepped, it will interfere with the body since the pin hole is through, which may result in failure.
- The slide table and end plate are supported by balls. When fixing a jig with bolts, be sure to hold the slide table and end plate while tightening. Otherwise a large moment will be applied to the guide, resulting in low accuracy of the guide.

SCPD3
SCM
SSD2
MDC2
SMG
LCM
LCR
LCG
LCX
STM
STG
STR2
MRL2
GRC
Cylinder switch
MN3E MN4E
4GA/B
M4GA/B
MN4GA/B
F.R (module unit)
Clean F.R
Precision R
Press gauge Diff. press gauge
Electro-pneumatic R
Speed controller
Auxiliary valve
Fitting/ tube
Clean air unit
Pressure sensor
Flow rate sensor
Valve for air blow
Ending

Mounting, installation and adjustment

■ Observe the following bolt insertion lengths and tightening torque when installing the jig on the body, slide table or end plate.

● Installing the body (side installation)

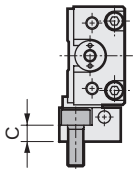

Note: Do not use a washer, etc. Otherwise the mounting bolt contacts the guide, resulting in damage.

Model No.	Applicable bolts	Max. tightening torque N·m	C mm
LCM-A-4.5	M3 × 0.5	1.14	5
LCM-A-6	M3 × 0.5	1.14	5
LCM-A-8	M4 × 0.7	2.7	4

● Mounting body

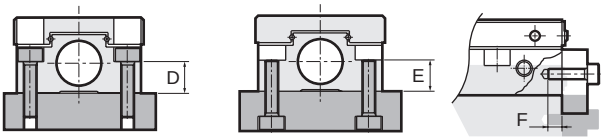

Model No.	Applicable bolts	Max. tightening torque N·m	D mm
LCM-*-4.5	M2 × 0.4	0.32	3.5
LCM-*-6	M2.5 × 0.45	0.65	5
LCM-*-8	M2.5 × 0.45	0.65	5.5

Model No.	Applicable bolts	Max. tightening torque N·m	E mm
LCM-*-4.5	M2.5 × 0.45	0.65	3.5
LCM-*-6	M3 × 0.5	1.14	5
LCM-*-8	M3 × 0.5	1.14	5.5

Model No.	Applicable bolts	Max. tightening torque N·m	Max. screw depth F mm
LCM-*-4.5	M2 × 0.4	0.32	2.5
LCM-*-6	M2.5 × 0.45	0.65	2.5
LCM-*-8	M3 × 0.5	1.14	3

● Attaching a jig

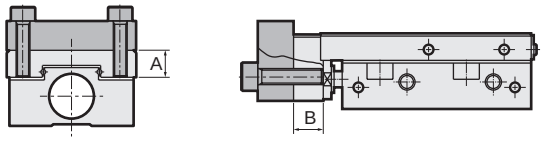

Model No.	Applicable bolts	Max. tightening torque N·m	Max. screw depth A mm	Max. screw depth B mm
LCM-*-4.5	M3 × 0.5	0.63	4	4.5
LCM-*-6	M3 × 0.5	0.63	4	5.5
LCM-*-8	M3 × 0.5	0.63	5	5.5

Note: Keep the length of the bolt for mounting a workpiece within the max. screw depth. Otherwise it may contact and damage the body.

■ This series can be modified to the type with switch. Also, the switch mounting surface can be changed. Observe the following tightening torque of bolts for fixing the switch rail. Note that the port on the switch mounting surface is not used and should be plugged before the switch rail is installed.

Model No.	Applicable bolts	Max. tightening torque N·m
LCM-*-4.5	M2 × 0.4	0.17
LCM-*-6	M2 × 0.4	0.17
LCM-*-8	M2 × 0.4	0.17

■ The cylinder switch may malfunction if there is a magnetic substance such as a metal plate installed adjacently. Confirm that a distance of at least 3 mm is allocated from the surface of the switch rails. (Same for all bore sizes)

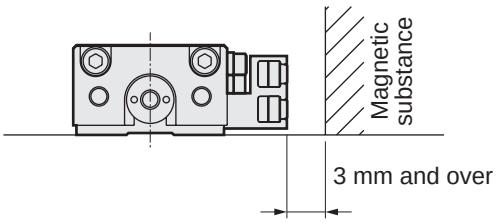

■ The cylinder switches may accidentally function if the cylinders are close to each other. Keep A, B, C and D 3 mm and over. (Same clearance for all bore sizes)

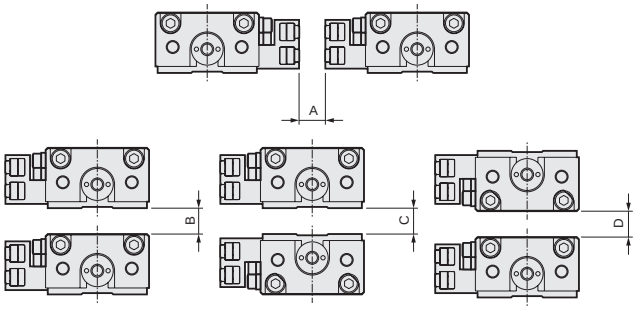

During use & maintenance

⚠ CAUTION

■ Apply CGL grease (IKO) to the guide rail every six months or three million operations, whichever comes first.

MEMO

MEMO

LCR

Linear slide cylinder

ø6/ø8/ø12/ø16/ø20/ø25

Combined functions

Overview

With a new wide high-precision linear guide, this model is most suitable for precision assembly with a thrust twice as large as that of previous models with a twin rod construction.

Features

Significant weight reduction

The aluminum table makes it possible to reduce its weight by up to 10% compared to the previous model.

Increased rigidity

The highly rigid linear guide and slide table have significantly improved the entire rigidity compared to previous models.

Increased flexibility in design

Designing is more flexible with the multi-side piping, two-side installation, a standard positioning hole and laterally symmetrical configuration.

A variety of choices

Six bore sizes from ø6 to ø25, stroke from 10 to 150 mm and an additional switch are available.

CONTENTS

Product introduction 108

Series variation

● **Double acting/single rod (LCR) 110**

● **Double acting/fine speed (LCR-F) 128**

Selection guide 132

Technical data 136

⚠ Safety precautions 139

LCR :Renewal Series

Linear slide cylinder

* The picture shows the standard product.

Extremely lightweight LCR :Reduce Weight

Up to 10% in weight reduction.

- **Compared to the conventional model: Up to 10% lighter!!**

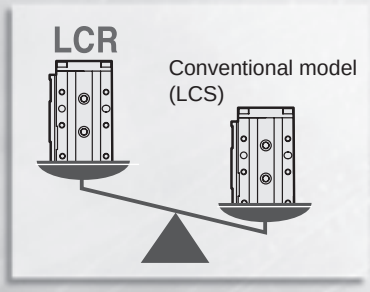

- **Applications**
  Works perfectly on the Z-axis.

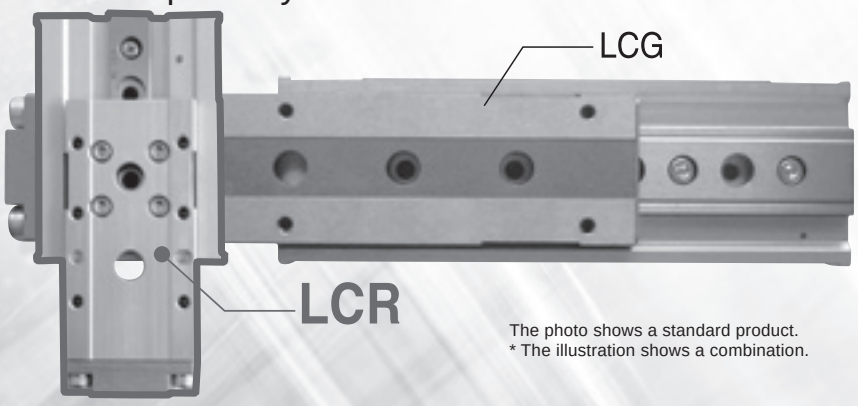

The photo shows a standard product.
* The illustration shows a combination.

The moving part is lighter, enabling
efficient, energy-saving compact equipment.

Increased rigidity LCR :Rigidity

The highly rigid linear guide and slide table surpass the conventional model (LCS) in rigidity!

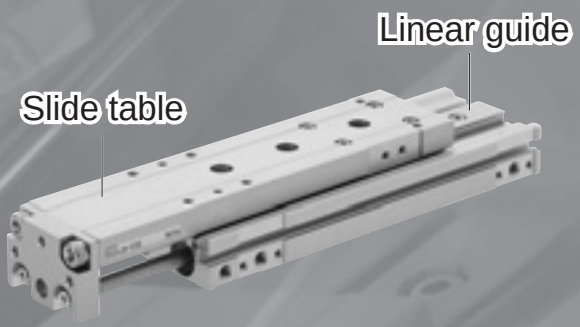

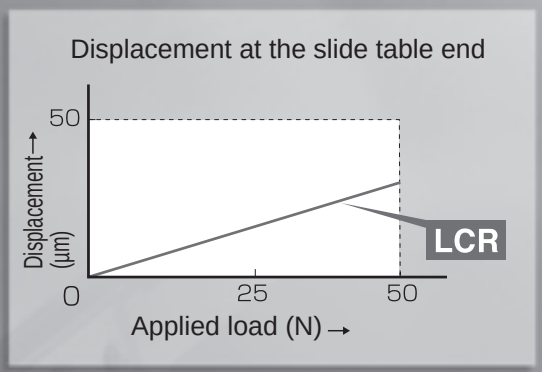

Flexible

RoHS

Symmetrical structure
Available for a variety of applications

Increased flexibility in design

Designing is more flexible with the symmetrical stoppers, multi-side piping, two-side installation and availability of a positioning hole.

■ Modification to the symmetrical configuration is possible
⬅ shows the piping direction.

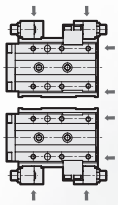

■ Standard rear piping port (except for ø 6)

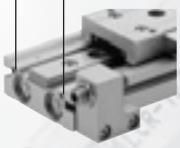

2-color display switch

The proximity 2-color display switch is available. It does not protrude from the body and thus contributes to simple appearance of the cylinder.

A wide variety of options and variations

The standard, position locking, clean room specifications and fine speed are available. The options include a stroke adjusting stopper, shock absorber stopper and more.

* A shock absorber stopper cannot be used with the clean room specifications.

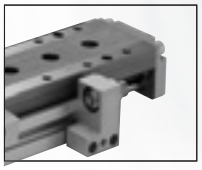

■ Stroke adjusting stopper
Adjusting range on one side: 0 to 5 mm

■ LCR product variations

● Option

Model variations	Bore size	Stroke length (mm) 10	20	30	40	50	75	100	125	150	Stroke adjusting stopper S*	Switch
Double acting/single rod (clean room specifications) LCR-P7*	ø 6	●	●	●	●	●					●	●
	ø 8	●	●	●	●	●	●				●	●
	ø 12	●	●	●	●	●	●	●			●	●
	ø 16	●	●	●	●	●	●	●	●		●	●
	ø 20/ø 25	●	●	●	●	●	●	●	●	●	●	●
Double acting/fine speed (clean room specifications) LCR-F-P7*	ø 12	●	●	●	●	●	●	●	●		●	●
	ø 16	●	●	●	●	●	●	●	●		●	●
	ø 20/ø 25	●	●	●	●	●	●	●	●	●	●	●

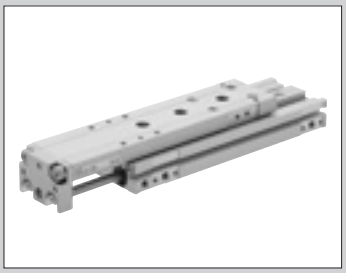

Linear slide cylinder Double acting/single rod

LCR Series

● Bore size: ø6/ø8/ø12/ø16/ø20/ø25

JIS symbol

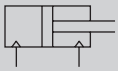

RoHS

Structure and material restriction

	Structure	Model No.
P7 Series	Exhaust treatment	P72
	Vacuum treatment	P73

Specifications

Descriptions		LCR-P7*					
Bore size mm		ø6	ø8	ø12	ø16	ø20	ø25
Actuation		Double acting					
Working fluid		Compressed air					
Max. working pressure MPa		0.7					
Min. working pressure MPa		0.15 (*2)					
Proof pressure MPa		1.05					
Ambient temperature °C		-10 to 60 (no freezing)					
Port size	Main body side	M3	M5			Rc1/8	
	Main body rear	-	M3			M5	Rc1/8
Port size (relief port)		M3	M5			Rc1/8	
Stroke tolerance mm		$^{+2.0}_{0}$ (*1)					
Working piston speed mm/s		50 to 500 (*3)					
Cushion		With rubber cushion					
Lubrication		Not available					
Allowable energy absorption J		Refer to table 3 on page 132.					

*1: Note that there will be a slight gap between the end plate and floating bush if no stopper is attached.
*2: The stroke adjusting stopper for 0.3MPa and over working pressure is the metal sealing type.
*3: Keep within 50 to 200 mm/s when using a stroke adjusting stopper.

Stroke

Bore size (mm)	Standard stroke (mm)
ø6	10, 20, 30, 40, 50
ø8	10, 20, 30, 40, 50, 75
ø12	10, 20, 30, 40, 50, 75, 100
ø16	10, 20, 30, 40, 50, 75, 100, 125
ø20	10, 20, 30, 40, 50, 75, 100, 125, 150
ø25	10, 20, 30, 40, 50, 75, 100, 125, 150

Note: The stroke other than above is not available.

Theoretical thrust table

Refer to page 133.

Switch specifications

● 1-color/2-color display

Descriptions	Reed 2-wire				Proximity 2-wire		Proximity 3-wire		
	T0H/T0V		T5H/T5V		T2H/T2V	T2WH/ T2WV	T3H/T3V	T3PH/ T3PV	T3WH/ T3WV
Applications	Programmable controller, relay		Programmable controller, relay IC circuit (without indicator lamp), serial connection		Programmable controller		Programmable controller, relay		
Output method	-		-		-		NPN output	PNP output	NPN output
Power supply voltage	-		-		-		10 to 28 VDC		
Load voltage	12/24 VDC	110 VAC	5/12/24 VDC	110 VAC	10 to 30 VDC	24 VDC ±10%	30 VDC or less		
Load current	5 to 50 mA	7 to 20 mA	50 mA or less	20 mA or less	5 to 20 mA		100 mA or less		50 mA or less
Indicator lamp	LED (Lit when ON)		Without indicator lamp		LED (Lit when ON)	Red/green LED (Lit when ON)	LED (Lit when ON)	Yellow LED (Lit when ON)	Red/green LED (Lit when ON)
Leakage current	0 mA				1 mA or less		10 μA or less		
Weight g	1 m: 18 3 m: 49 5 m: 80								

Descriptions	Proximity 2-wire	Proximity 3-wire	Proximity 2-wire		Proximity 3-wire		
	F2S	F3S	F2H/F2V	F2YH/ F2YV	F3H/F3V	F3PH/F3PV (custom order)	F3YH/ F3YV
Applications	Programmable controller	Programmable controller, relay	Programmable controller		Programmable controller, relay		
Output method	-	NPN output	-		NPN output	PNP output	NPN output
Power supply voltage	-	10 to 28 VDC	-		10 to 28 VDC	4.5 to 28 VDC	10 to 28 VDC
Load voltage	10 to 30 VDC	30 VDC or less	10 to 30 VDC	24 VDC ±10%	30 VDC or less		
Load current	5 to 20 mA	50 mA or less	5 to 20 mA (*2)		100 mA or less	50 mA or less	
Indicator lamp	Red LED (Lit when ON)		LED (Lit when ON)	Red/green LED (Lit when ON)	LED (Lit when ON)	Yellow LED (Lit when ON)	Red/green LED (Lit when ON)
Leakage current	1 mA or less	10 μA or less	1 mA or less		10 μA or less		
Weight g	1 m: 10 3 m: 29						

*1: Refer to page 309 for detailed switch specifications and dimensions.
*2: Max. load current: 20mA at 25°C.The current is lower than 25 mA if the operating ambient temperature around the switch is higher than 20˚C. (60 to 5 mA at 10°C.)
*3: The F type switch uses a bend-resistant lead wire.

Cylinder weight

● Clean room specifications (Unit: g)

Bore size (mm)	Fine speed stroke (mm)								
	10	20	30	40	50	75	100	125	150
ø6	130	130	150	180	200	-	-	-	-
ø8	220	220	240	290	320	380	-	-	-
ø12	400	410	410	450	480	610	700	-	-
ø16	620	630	630	680	740	970	1,100	1,240	-
ø20	1,160	1,170	1,180	1,260	1,350	1,650	1,860	2,070	2,280
ø25	2,010	2,030	2,040	2,150	2,250	2,740	3,010	3,280	3,550

● Weight of variation/option (stopper) (Unit: g)

Bore size (mm)	Option/stopper Code	
	S1 to S4	S5/S6
ø6	30	40
ø8	40	60
ø12	70	100
ø16	110	150
ø20	170	250
ø25	290	380

How to order

Without switch (Magnet for switch incorporated)

LCR - 8 - 40 ——— S506 DT P72

With switch (Magnet for switch incorporated)

LCR - 12 - 40 - F2H* - R - S506 DT P72

- LCR: Model No.
- 12: Ⓐ Bore size
- 40: Ⓑ Stroke
- F2H*: Ⓒ Switch model No.
- R: Ⓓ Switch quantity
- S506: Ⓔ Stopper
- DT: Ⓕ Option
- P72: Ⓖ Clean room specifications

Precautions for model No. selection

*1: For the port position, refer to the stopper dimensions on page 126.
*2: The port positions of the standard without stopper are (1) and (3) in the figure below.
*3: Can be selected for the type with stopper only.
*4: When two switches are necessary in the type with S*** of ø6 to ø8 with 30 mm stroke or less, select the F□H switch.
*5: Select when using rear piping.
*6: The stroke adjusting stopper for 0.3 MPa and over working pressure is the metal sealing.
*7: When changing the stopper position from the head side to the rod side, another discrete stopper may be required to be purchased depending on the stroke or the stroke adjustment amount.
For details, please consult our sales staff.
For some strokes, the adjustment amount of 15 mm or 25 mm is not allowed.

[Example of model No.]

LCR-12-40-F2H-R-S1DTP72

Model: Linear slide cylinder Double acting/single rod (clean room specifications) LCR-P7*

- Ⓐ Bore size : ø12
- Ⓑ Stroke : 40 mm
- Ⓒ Switch model No. : Proximity/2 wires/Lead wire 1 m Lead wire straight
- Ⓓ Switch quantity: 1 (on rod end)
- Ⓔ Stopper : Stroke adjusting stopper Stopper position (1)
- Ⓕ Option : Side port on stopper/Bottom port on stopper. Stopper block material: steel (nitriding)
- Ⓖ Clean room specifications : Exhaust treatment

● Stopper position

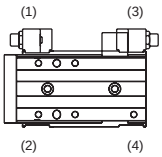

Code	Content
Ⓐ Bore size	
6	ø6
8	ø8
12	ø12
16	ø16
20	ø20
25	ø25

Ⓑ Stroke (mm)

		Bore size (ø)					
		6	8	12	16	20	25
10	10	●	●	●	●	●	●
20	20	●	●	●	●	●	●
30	30	●	●	●	●	●	●
40	40	●	●	●	●	●	●
50	50	●	●	●	●	●	●
75	75		●	●	●	●	●
100	100			●	●	●	●
125	125				●	●	●
150	150					●	●

Ⓒ Switch model No.

Lead wire straight	Lead wire L-shaped	Contact	Display	Lead wire	Bore size ø6	ø8	ø12	ø16	ø20	ø25
—	F2S*	Proximity	1-color display	2 wires	●	●	●			
—	F3S*			3 wires						
F2H*	F2V*			2 wires						
F3H*	F3V*			3 wires						
F3PH*	F3PV*		1-color display (custom order)							
F2YH*	F2YV*		2-color display	2 wires						
F3YH*	F3YV*			3 wires						
T0H*	T0V*	Reed	1-color display	2 wires				●	●	●
T5H*	T5V*		Without indicator lamp							
T2H*	T2V*	Proximity	1-color display	2 wires						
T3H*	T3V*			3 wires						
T3PH*	T3PV*		1-color display (PNP output)							
T2WH*	T2WV*		2-color display	2 wires						
T3WH*	T3WV*			3 wires						

Lead wire length

Blank	1 m (standard)			●			
3	3 m (option)			●			
5	5 m (option)					●	

Ⓓ Switch quantity

R	1 (on rod end)	●
H	1 (on head end)	●
D	2	●

Ⓔ Stopper

Blank	No option		●
S Stroke adjusting stopper			
5 mm stroke adjustment on one side			*4
S1**	Stopper position (1) (can be changed to (4))	Stopper mounting position	●
S2**	Stopper position (2) (can be changed to (3))		●
S3**	Stopper position (3) (can be changed to (2))		●
S4**	Stopper position (4) (can be changed to (1))		●
S5**	Stopper position (1), (3)		●
S6**	Stopper position (2), (4)		●

Section ** Adjustable stroke range ● Applies to all. ▲ Applies to some. *3

	Extended end	Return end	
Blank	5 mm or none	5 mm or none	●
02	15 mm or none	15 mm or none	●
03	25 mm or none	25 mm or none	●
04	15 mm	5 mm	▲
05	25 mm	5 mm	▲
06	5 mm	15 mm	▲
07	5 mm	25 mm	▲

Ⓕ Option

Blank	Port on the stopper: No port	●
D	Port on the stopper: Side and bottom ports	● *1, *3
Blank	Stopper block material: steel	●
T	Stopper block material: steel (nitriding)	● *3
Plug attached		
Blank	None	
N	With side piping port plug (not available for ø6 and ø25)	*5

Ⓖ Clean room specifications

	Structure
P72	Exhaust treatment
P73	Vacuum treatment

How to select stopper

Stopper combination table

Model No.−[(1) (2) stopper] [(3) adjustable stroke range]

Example) LCR-8-40-[S5] [06]-P7*

Stroke adjusting stopper S

Adjustable stroke range model No. [(3)]	Stopper adjusting range: Extended end	Stopper adjusting range: Return end	Stopper model No. [(1) (2)]: [S1]	[S2]	[S3]	[S4]	[S5]	[S6]
Blank	5 mm or none	5 mm or none	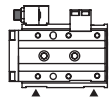 [S1]	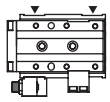 [S2]	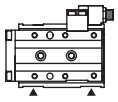 [S3]	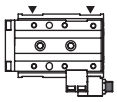 [S4]	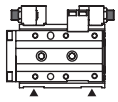 [S5]	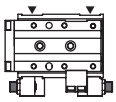 [S6]
[02]	15 mm or none	15 mm or none	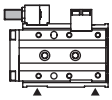 [S102]	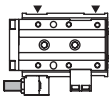 [S202]	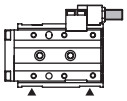 [S302]	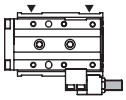 [S402]	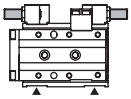 [S502]	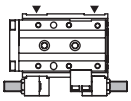 [S602]
[03]	25 mm or none	25 mm or none	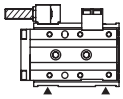 [S103]	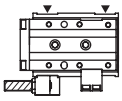 [S203]	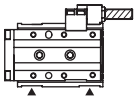 [S303]	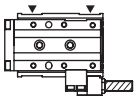 [S403]	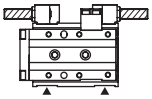 [S503]	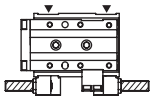 [S603]
[04]	15 mm	5 mm					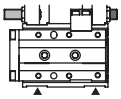 [S504]	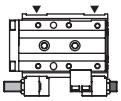 [S604]
[05]	25 mm	5 mm					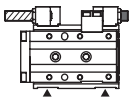 [S505]	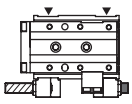 [S605]
[06]	5 mm	15 mm					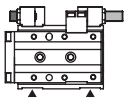 [S506]	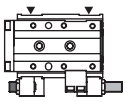 [S606]
[07]	5 mm	25 mm					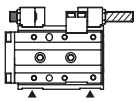 [S507]	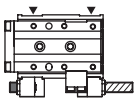 [S607]

: Stroke adjusting stopper (adjusting range: 5 mm)
: Stroke adjusting stopper (adjusting range: 15 mm)
: Stroke adjusting stopper (adjusting range: 25 mm)

▲ shows the piping direction.

Available combination table

●: Available -: Unavailable

Bore size (mm)		Stopper code																								
		S1			S2			S3			S4			S5							S6						
		Adjustment length code																								
		Blank	02	03	Blank	02	03	Blank	02	03	Blank	02	03	Blank	02	03	04	05	06	07	Blank	02	03	04	05	06	07
ø6, ø8	10st	●	-	-	●	-	-	●	●	-	●	●	-	●	-	-	-	-	●	-	●	-	-	-	-	●	-
	20st or more	●	●	-	●	●	-	●	●	-	●	●	-	●	●	-	●	-	●	-	●	●	-	●	-	●	-
ø12 to ø25	10st	●	-	-	●	-	-	●	●	-	●	●	-	●	-	-	-	-	●	-	●	-	-	-	-	●	-
	20st	●	●	-	●	●	-	●	●	●	●	●	●	●	●	-	●	-	●	●	●	●	-	●	-	●	●
	30st or more	●	●	●	●	●	●	●	●	●	●	●	●	●	●	●	●	●	●	●	●	●	●	●	●	●	●

SCPD3
SCM
SSD2
MDC2
SMG
LCM
LCR
LCG
LCX
STM
STG
STR2
MRL2
GRC
Cylinder switch
MN3E MN4E
4GA/B
M4GA/B
MN4GA/B
F.R (module unit)
Clean F.R
Precision R
Press gauge Diff. press gauge
Electro-pneumatic R
Speed controller
Auxiliary valve
Fitting/ tube
Clean air unit
Pressure sensor
Flow rate sensor
Valve for air blow
Ending

Dimensions (bore size: ø6)

● LCR-6-P7*

Stroke: 10, 20, 30
(Body mounting hole in the figure shows 20 mm stroke)

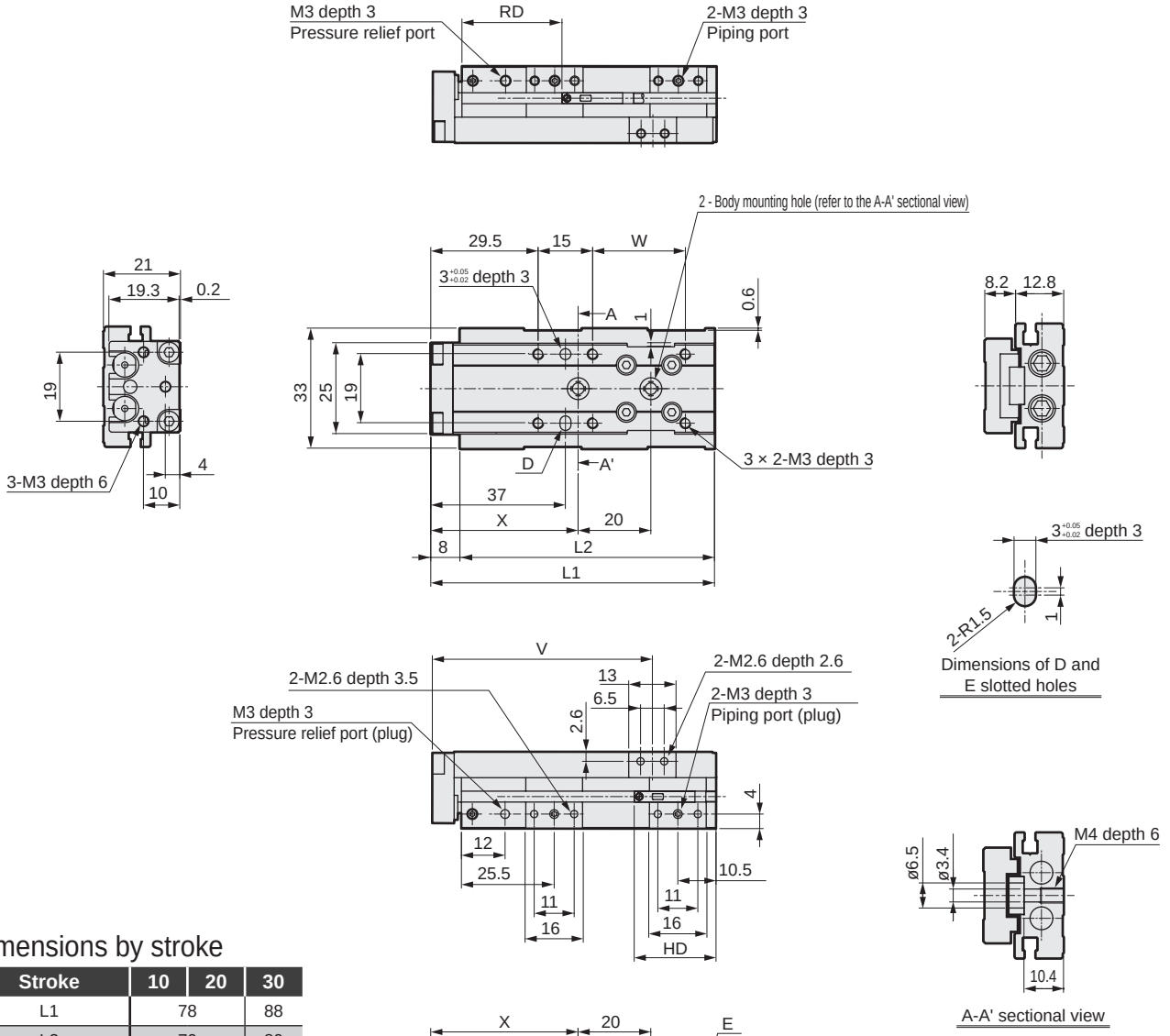

Dimensions by stroke

Stroke	10	20	30
L1	78		88
L2	70		80
V	60.5		70.5
W	25.5		35.5
X	40.5		38
Y	45.5		43
RD	27		
HD	33	23	

● Dimensions of projecting section when F2S or F3S cylinder switch is mounted

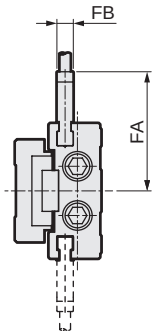

Stroke	10	20	30
FA	29.1		
FB	4		
RD	26		
HD	34	24	

Note 1: When using a positioning hole, use a pin of the dimensions that do not require press fitting. The recommended tolerance of a pin is JIS tolerance m6 or less.

Dimensions (bore size: ø6)

● LCR-6-P7*

Stroke: 40, 50
(Mounting holes in the figure indicate when stroke is 50)

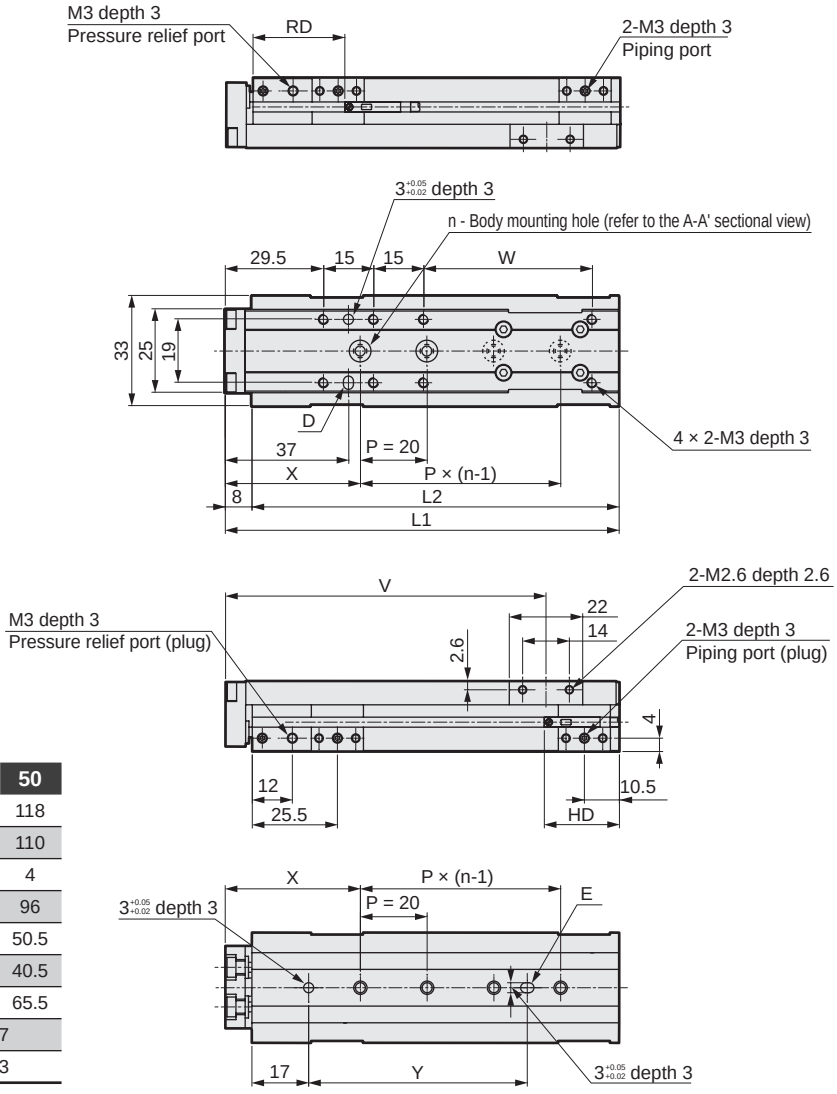

Dimensions by stroke

Stroke	40	50
L1	108	118
L2	100	110
n	3	4
V	86	96
W	40.5	50.5
X	39	40.5
Y	44	65.5
RD	27	
HD	23	

● Dimensions of projecting section when F2S or F3S cylinder switch is mounted

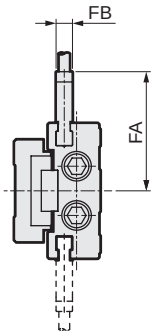

Stroke	40	50
FA	29.1	
FB	4	
RD	26	
HD	24	

Note 1: When using a positioning hole, use a pin of the dimensions that do not require press fitting. The recommended tolerance of a pin is JIS tolerance m6 or less.

Dimensions (bore size: ø8)

● LCR-8-P7*

Stroke: 10, 20, 30
(Mounting holes in the figure indicate when stroke is 30)

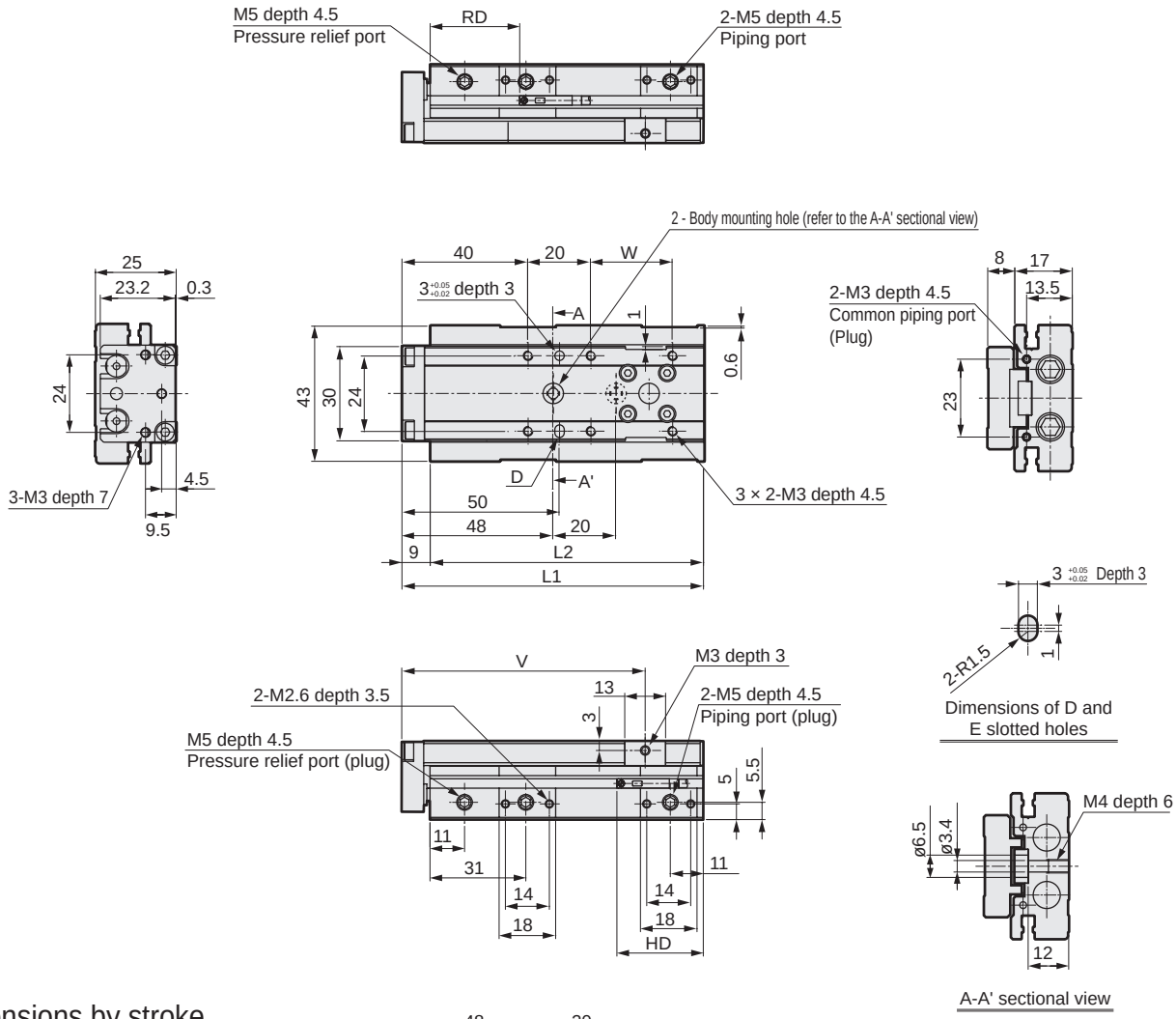

Dimensions by stroke

Stroke	10	20	30
L1	86		96
L2	77		87
V	67.5		77.5
W	16		26
RD	33		
HD	34	24	

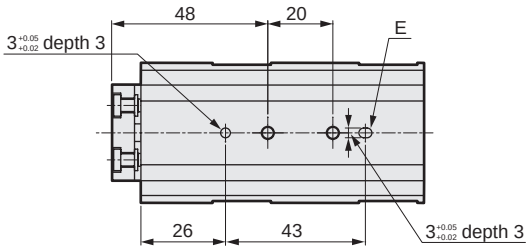

● Dimensions of projecting section when F2S or F3S cylinder switch is mounted

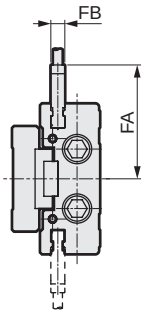

Stroke	10	20	30
FA	32.6		
FB	4		
RD	32		
HD	35	25	

Note 1: When using a positioning hole, use a pin of the dimensions that do not require press fitting. The recommended tolerance of a pin is JIS tolerance m6 or less.
Note 2: When using rear piping, refer to the cautions of 1. Common; when piping on page 140.

Dimensions (bore size: ø8)

● LCR-8-P7*

Stroke: 40, 50, 75

(Mounting holes in the figure indicate when stroke is 50)

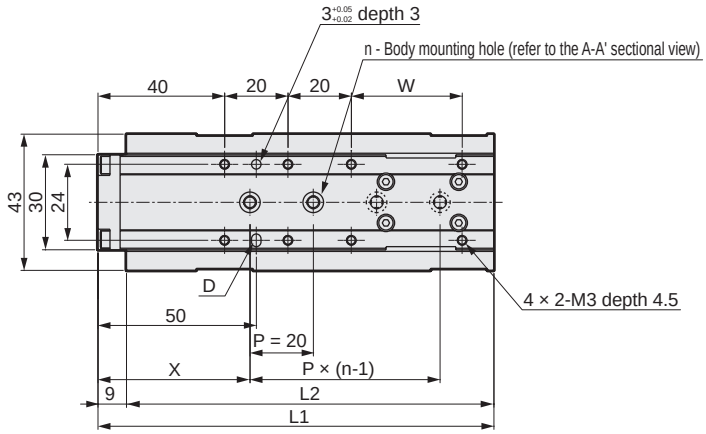

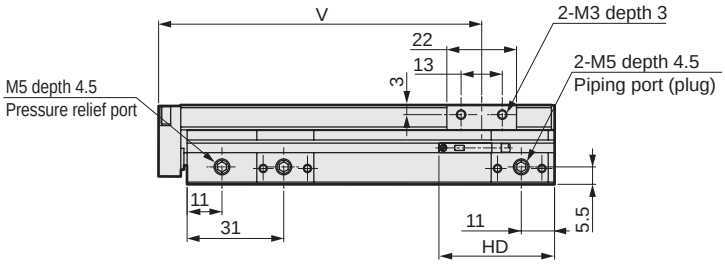

Dimensions by stroke

Stroke	40	50	75
L1	115	125	150
L2	106	116	141
n	3	4	5
V	92	102	127
W	25	35	60
X	46.5	48	45
Y	41.5	63	80
RD	33		
HD	33		

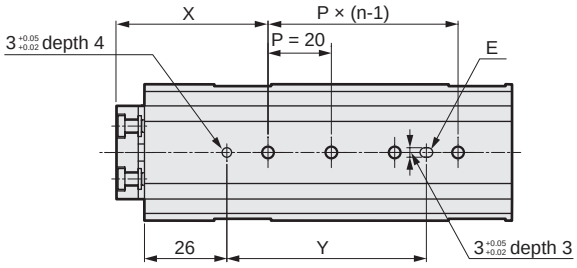

● Dimensions of projecting section when F2S or F3S cylinder switch is mounted

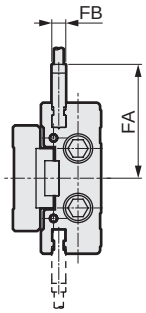

Stroke	40	50	75
FA	32.6		
FB	4		
RD	32		
HD	34		

Note 1: When using a positioning hole, use a pin of the dimensions that do not require press fitting. The recommended tolerance of a pin is JIS tolerance m6 or less.

Note 2: When using rear piping, refer to the cautions of 1. Common; when piping on page 140.

SCPD3
SCM
SSD2
MDC2
SMG
LCM
LCR
LCG
LCX
STM
STG
STR2
MRL2
GRC
Cylinder switch
MN3E MN4E
4GA/B
M4GA/B
MN4GA/B
F.R (module unit)
Clean F.R
Precision R
Press gauge Diff. press gauge
Electro-pneumatic R
Speed controller
Auxiliary valve
Fitting/ tube
Clean air unit
Pressure sensor
Flow rate sensor
Valve for air blow
Ending

Dimensions (bore size: ø12)

● LCR-12-P7*

Stroke: 10, 20, 30, 40, 50

(Mounting holes in the figure indicate when stroke is 30)

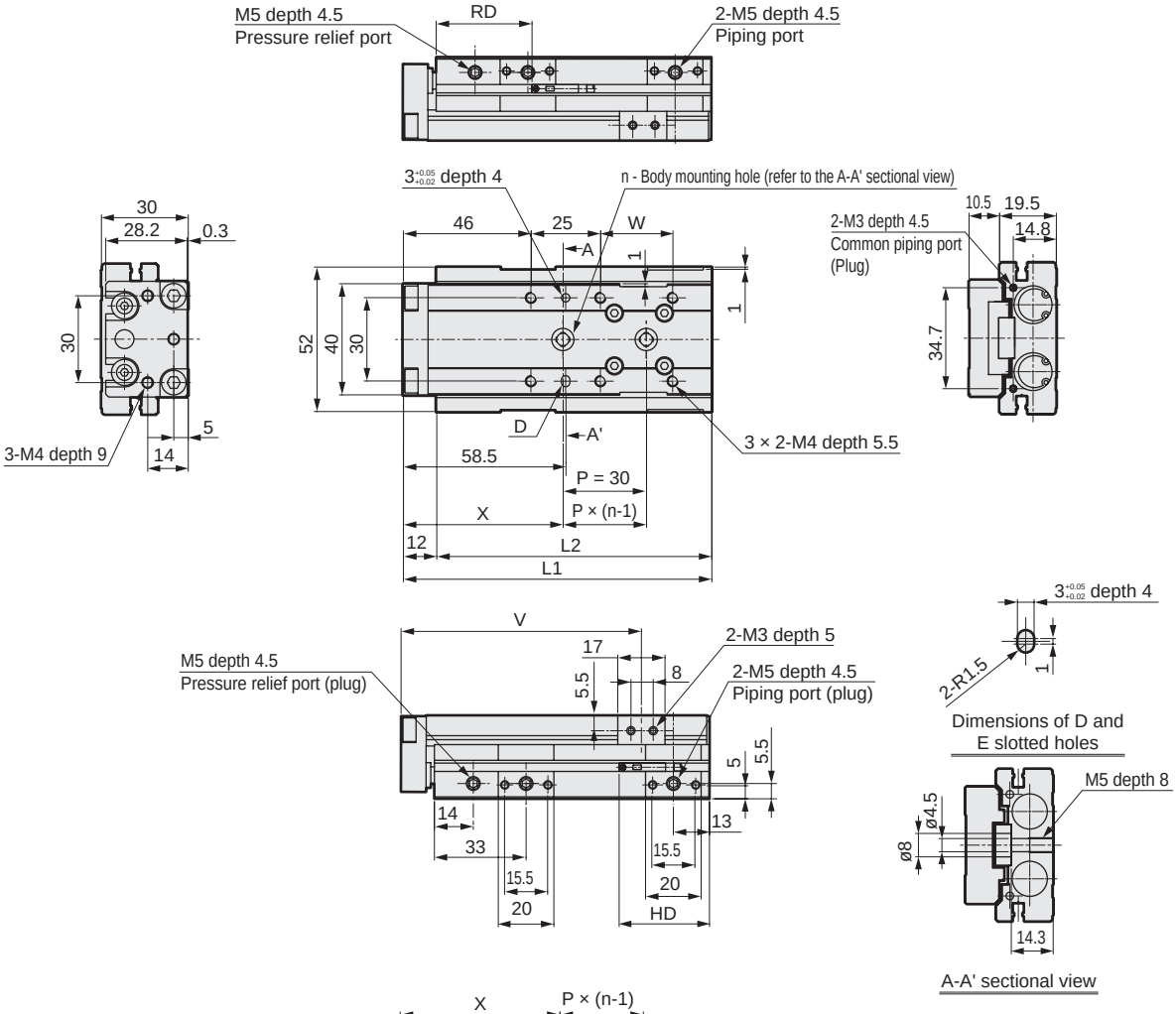

Dimensions by stroke

Stroke	10	20	30	40	50
L1	111			121	131
L2	99			109	119
n	2			3	
V	88.5			96.5	106.5
W	26			36	46
X	57.5			56	52
Y	32.5			31	57
RD	36.5				
HD	52.5	42.5	32.5		

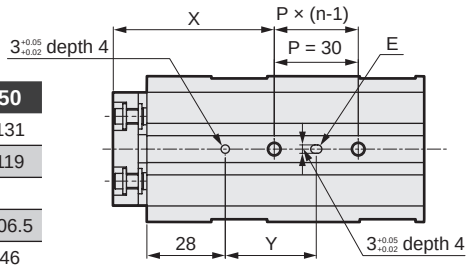

● Dimensions of projecting section when F2S or F3S cylinder switch is mounted

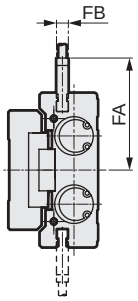

Stroke	10	20	30	40	50
FA	37.8				
FB	4				
RD	35.5				
HD	53.5	43.5	33.5		

Note 1: When using a positioning hole, use a pin of the dimensions that do not require press fitting. The recommended tolerance of a pin is JIS tolerance m6 or less.

Note 2: When using rear piping, refer to the cautions of 1. Common; when piping on page 140.

Dimensions (bore size: ø12)

● LCR-12-P7*
Stroke: 75, 100
(Mounting holes in the figure indicate when stroke is 75)

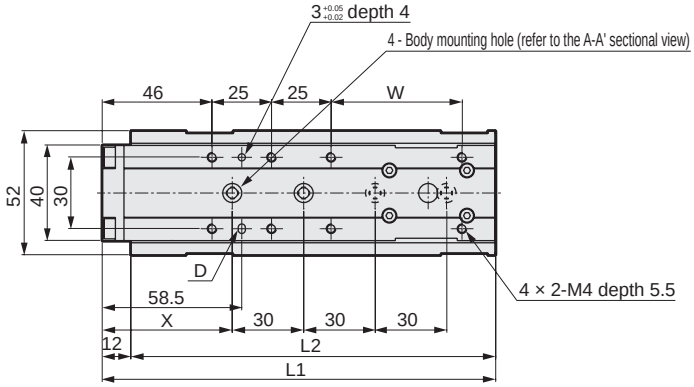

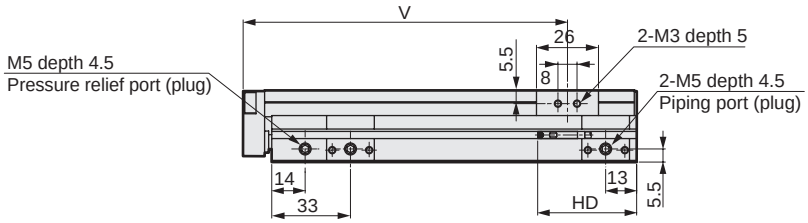

Dimensions by stroke

Stroke	75	100
L1	165	190
L2	153	178
V	136	161
W	55	80
X	54.5	67
Y	89.5	102
RD	36.5	
HD	41.5	

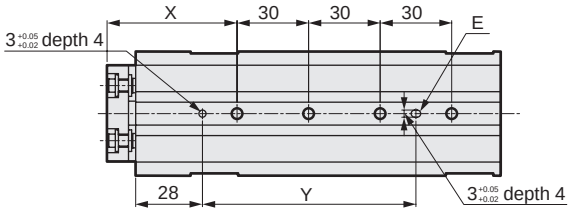

● Dimensions of projecting section when F2S or F3S cylinder switch is mounted

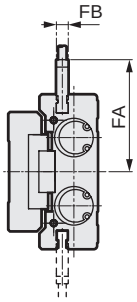

Stroke	75	100
FA	37.8	
FB	4	
RD	35.5	
HD	42.5	

Note 1: When using a positioning hole, use a pin of the dimensions that do not require press fitting. The recommended tolerance of a pin is JIS tolerance m6 or less.
Note 2: When using rear piping, refer to the cautions of (1. Common; when piping) on page 140.

Dimensions (bore size: ø16)

● LCR-16-P7*

Stroke: 10, 20, 30, 40, 50

(Mounting holes in the figure indicate when stroke is 30)

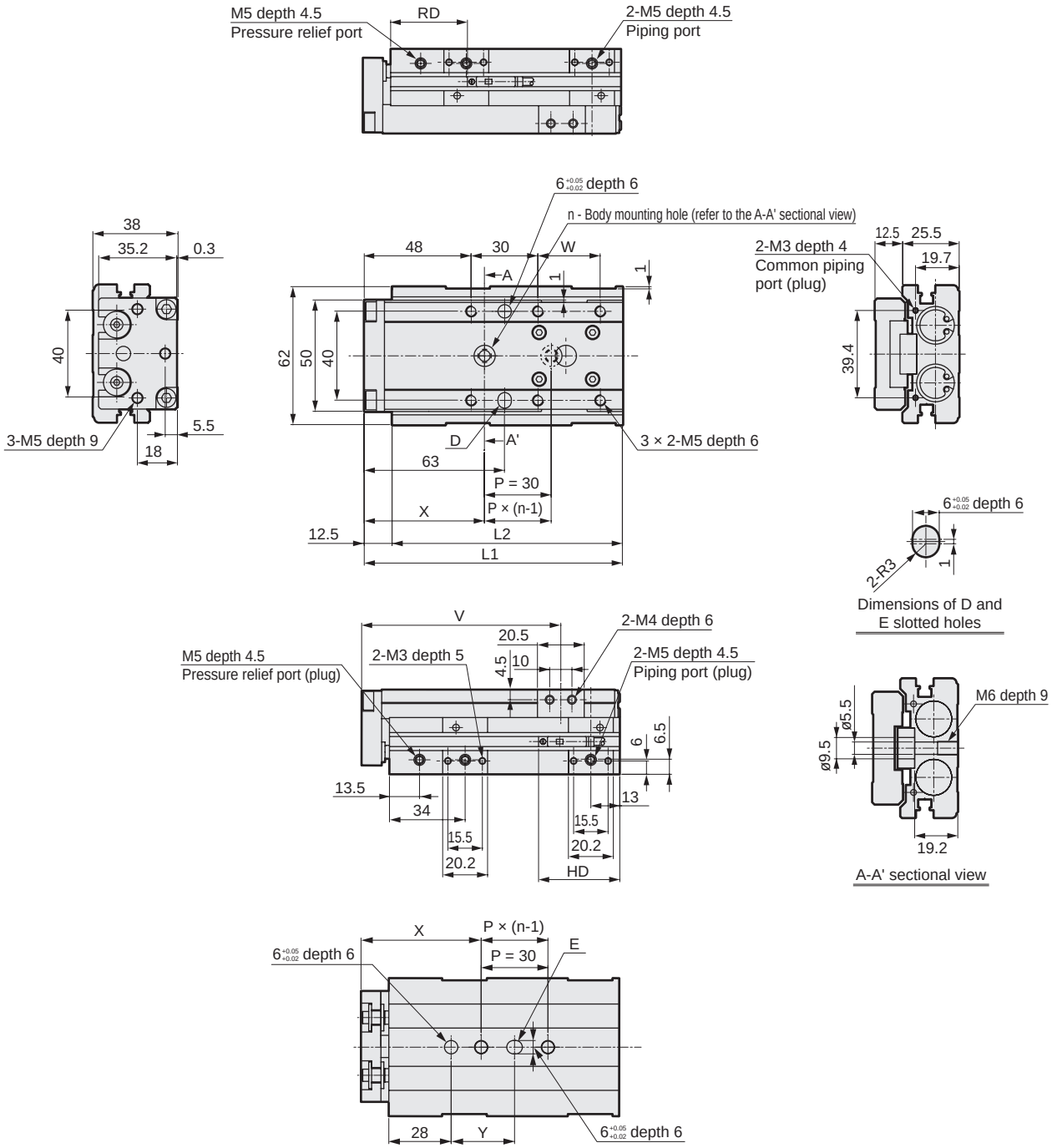

Dimensions by stroke

Stroke		10	20	30	40	50
L1		116			126	136
L2		103.5			113.5	123.5
n		2				3
V		89.8			99.8	109.8
W		28			38	48
X		54			65.5	55.5
Y		28.5			40	60
T0/5*	RD	37				
T2/3*	HD	56.5	46.5	36.5		
T2/3W*	RD	39.5				
	HD	54	44	34		

Note 1: When using a positioning hole, use a pin of the dimensions that do not require press fitting. The recommended tolerance of a pin is JIS tolerance m6 or less.

Note 2: When using rear piping, refer to the cautions of 1. Common; when piping on page 140.

Dimensions (bore size: ø16)

● LCR-16-P7*

Stroke: 75, 100, 125
(Mounting holes in the figure indicate when stroke is 75)

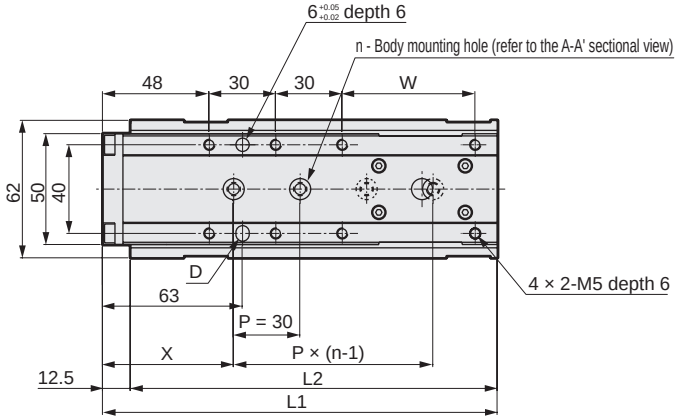

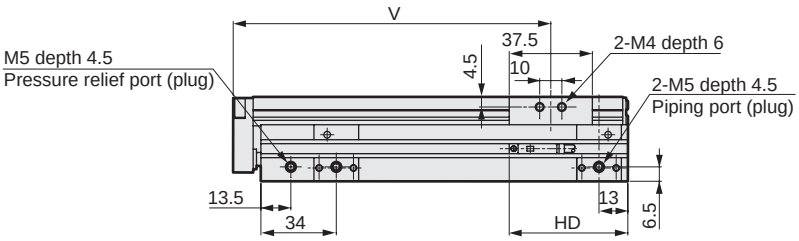

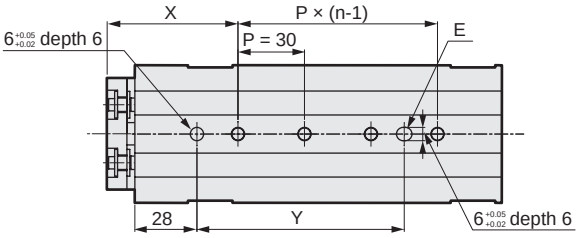

Dimensions by stroke

Stroke		75	100	125
L1		178	203	228
L2		165.5	190.5	215.5
n		4	5	
V		143.3	168.3	193.3
W		60	85	110
X		59	57	69
Y		93.5	121.5	133.5
T0/5*	RD	37		
T2/3*	HD	53.5		
T2/3W*	RD	39.5		
	HD	51		

Note 1: When using a positioning hole, use a pin of the dimensions that do not require press fitting. The recommended tolerance of a pin is JIS tolerance m6 or less.
Note 2: When using rear piping, refer to the cautions of 1. Common; when piping on page 140.

Dimensions (bore size: ø20)

● LCR-20-P7*

Stroke: 10, 20, 30, 40, 50

(Mounting holes in the figure indicate when stroke is 30)

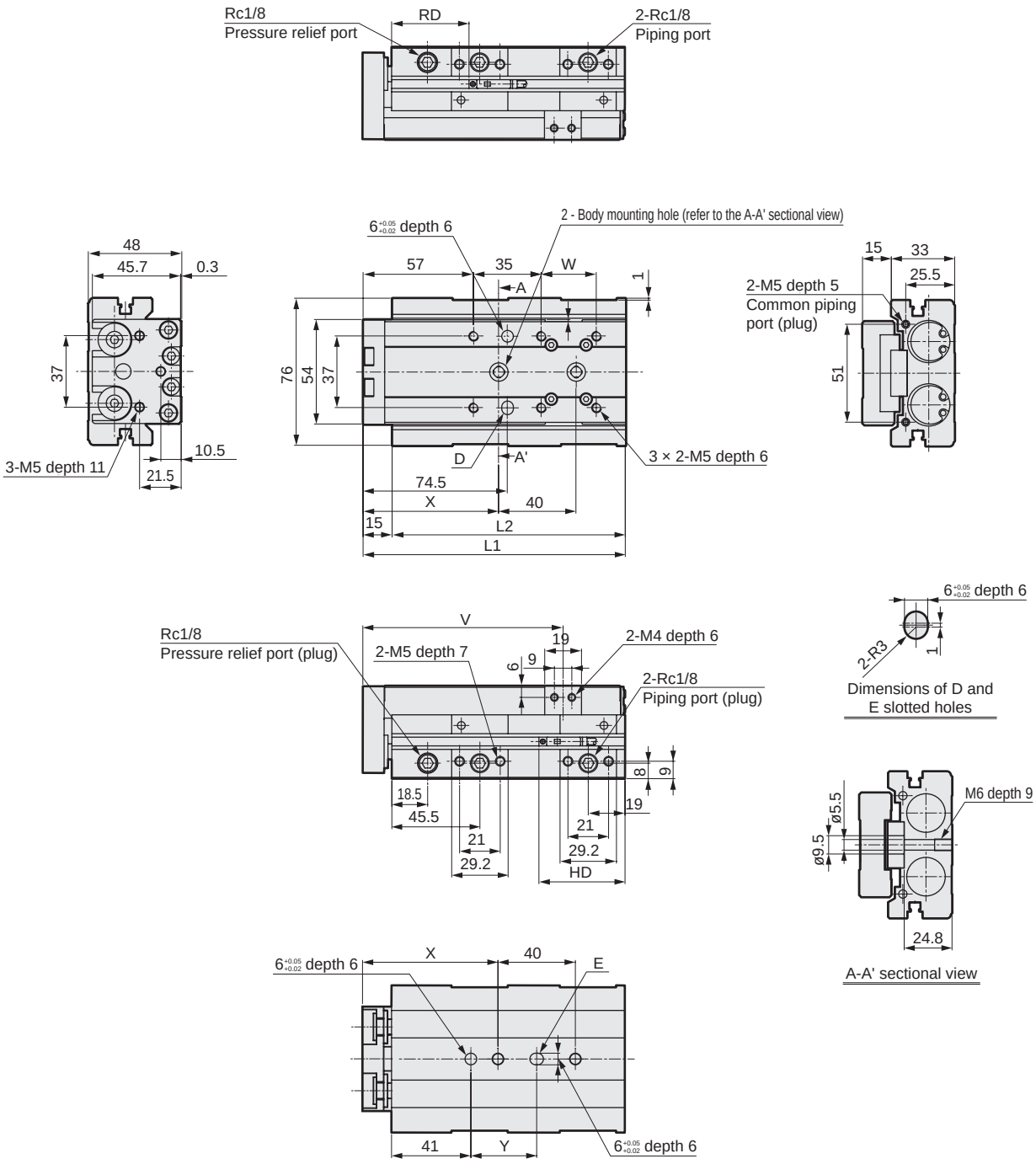

Dimensions by stroke

Stroke		10	20	30	40	50
L1		135.5			145.5	155.5
L2		120.5			130.5	140.5
V		103.5			113.5	123.5
W		28.5			38.5	48.5
X		70			76	74
Y		34			40	38
T0/5*	RD	45.5				
T2/3*	HD	65	55	45		
T2/3W*	RD	47				
	HD	63	53	43		

Note 1: When using a positioning hole, use a pin of the dimensions that do not require press fitting. The recommended tolerance of a pin is JIS tolerance m6 or less.

Note 2: When using rear piping, refer to the cautions of 1. Common; when piping on page 140.

Dimensions (bore size: ø20)

● LCR-20-P7*

Stroke: 75, 100, 125, 150

(Mounting holes in the figure indicate when stroke is 100)

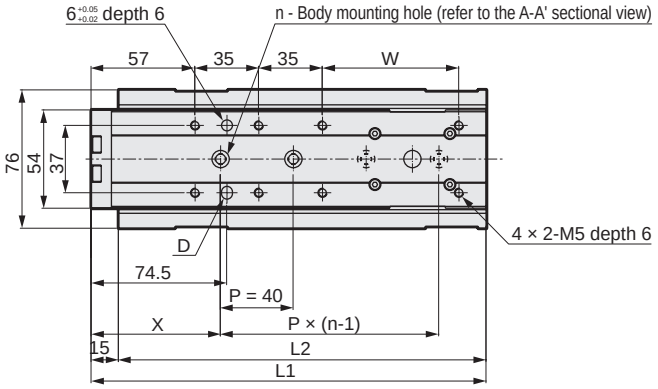

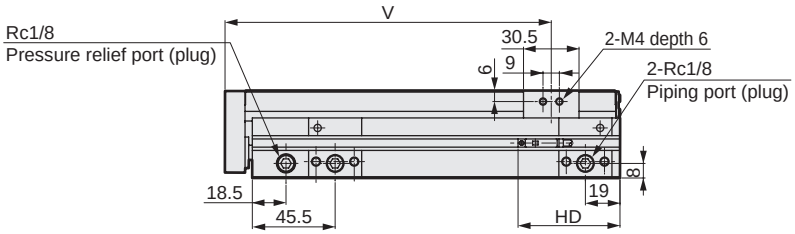

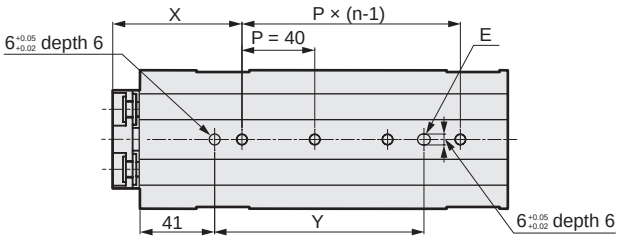

Dimensions by stroke

Stroke		75	100	125	150
L1		192	217	242	267
L2		177	202	227	252
n		3	4		5
V		154.3	179.3	204.3	229.3
W		50	75	100	125
X		71		78	76
Y		75	115	122	160
T0/5*	RD	45.5			
T2/3*	HD	57.5			
T2/3W*	RD	47			
	HD	55.5			

Note 1: When using a positioning hole, use a pin of the dimensions that do not require press fitting. The recommended tolerance of a pin is JIS tolerance m6 or less.

Note 2: When using rear piping, refer to the cautions of 1. Common; when piping on page 140.

Dimensions (bore size: ø25)

● LCR-25-P7*

Stroke: 10, 20, 30, 40, 50

(Mounting holes in the figure indicate when stroke is 30)

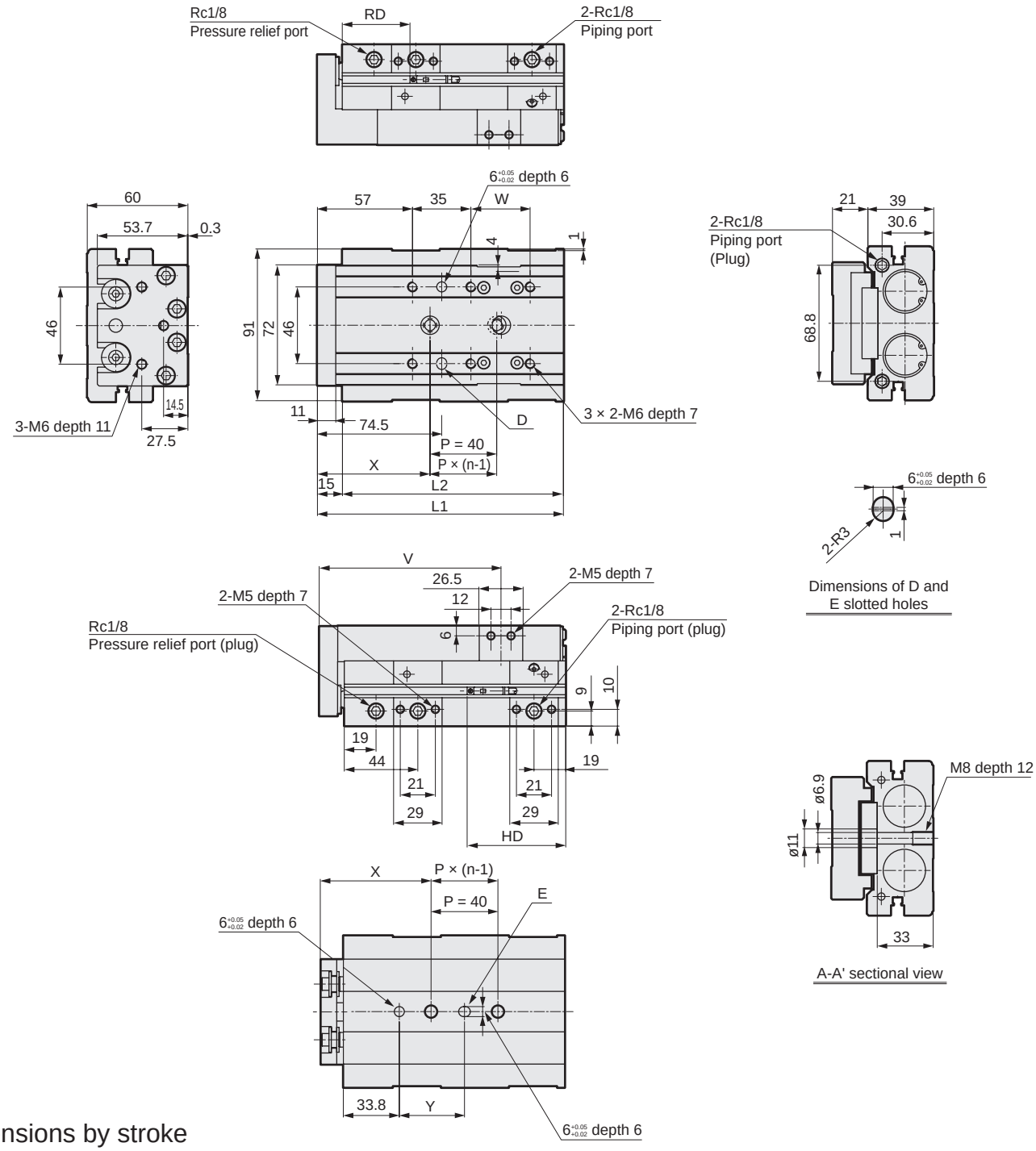

Dimensions by stroke

Stroke		10	20	30	40	50
L1		147.5			157.5	167.5
L2		132.5			142.5	152.5
n		2			3	2
V		108.8			118.8	128.8
W		35.5			45.5	55.5
X		67.5			70.5	85.5
Y		39			42	57
T0/5*	RD	44				
T2/3*	HD	78.5	68.5	58.5		
T2/3W*	RD	46				
	HD	76.5	66.5	56.5		

Note 1: When using a positioning hole, use a pin of the dimensions that do not require press fitting. The recommended tolerance of a pin is JIS tolerance m6 or less.

Note 2: When using rear piping, refer to the cautions of 1. Common; when piping on page 140.

Dimensions (bore size: ø25)

● LCR-25-P7*

Stroke: 75, 100, 125, 150

(Mounting holes in the figure indicate when stroke is 100)

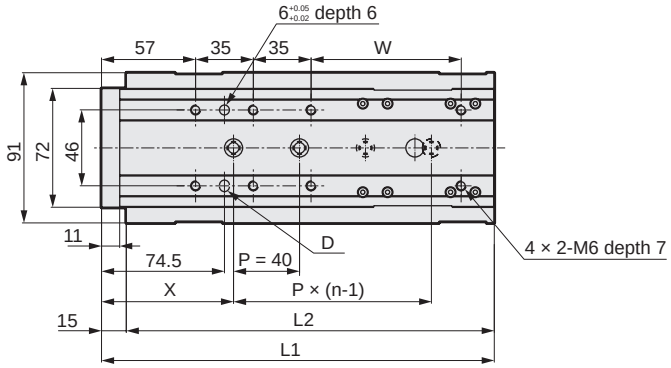

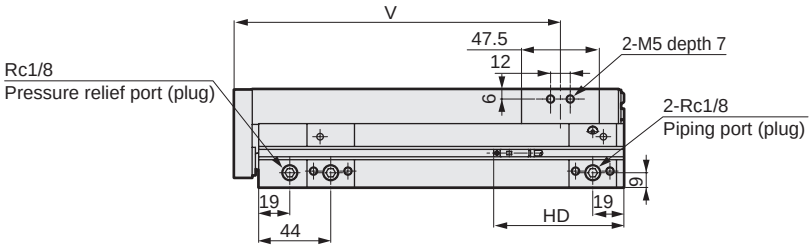

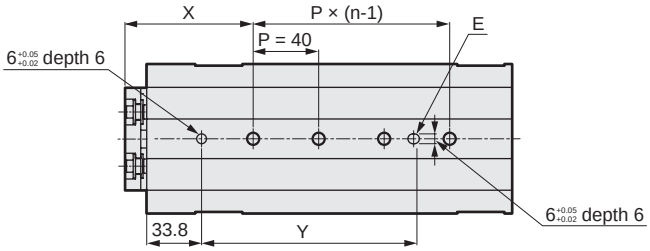

Dimensions by stroke

Stroke		75	100	125	150
L1		213	238	263	288
L2		198	223	248	273
n		3	4	5	
V		163.8	188.8	213.8	238.8
W		66	91	116	141
X		85	80	70	85
Y		96.5	131.5	161.5	176.5
T0/5*	RD	44			
T2/3*	HD	79			
T2/3W*	RD	46			
	HD	77			

Note 1: When using a positioning hole, use a pin of the dimensions that do not require press fitting. The recommended tolerance of a pin is JIS tolerance m6 or less.

Note 2: When using rear piping, refer to the cautions of 1. Common; when piping on page 140.

SCPD3
SCM
SSD2
MDC2
SMG
LCM
LCR
LCG
LCX
STM
STG
STR2
MRL2
GRC
Cylinder switch
MN3E MN4E
4GA/B
M4GA/B
MN4GA/B
F.R (module unit)
Clean F.R
Precision R
Press gauge Diff. press gauge
Electro-pneumatic R
Speed controller
Auxiliary valve
Fitting/ tube
Clean air unit
Pressure sensor
Flow rate sensor
Valve for air blow
Ending

Dimensions: Option

● Stroke adjusting stopper (S1 to S6)

• For ø8

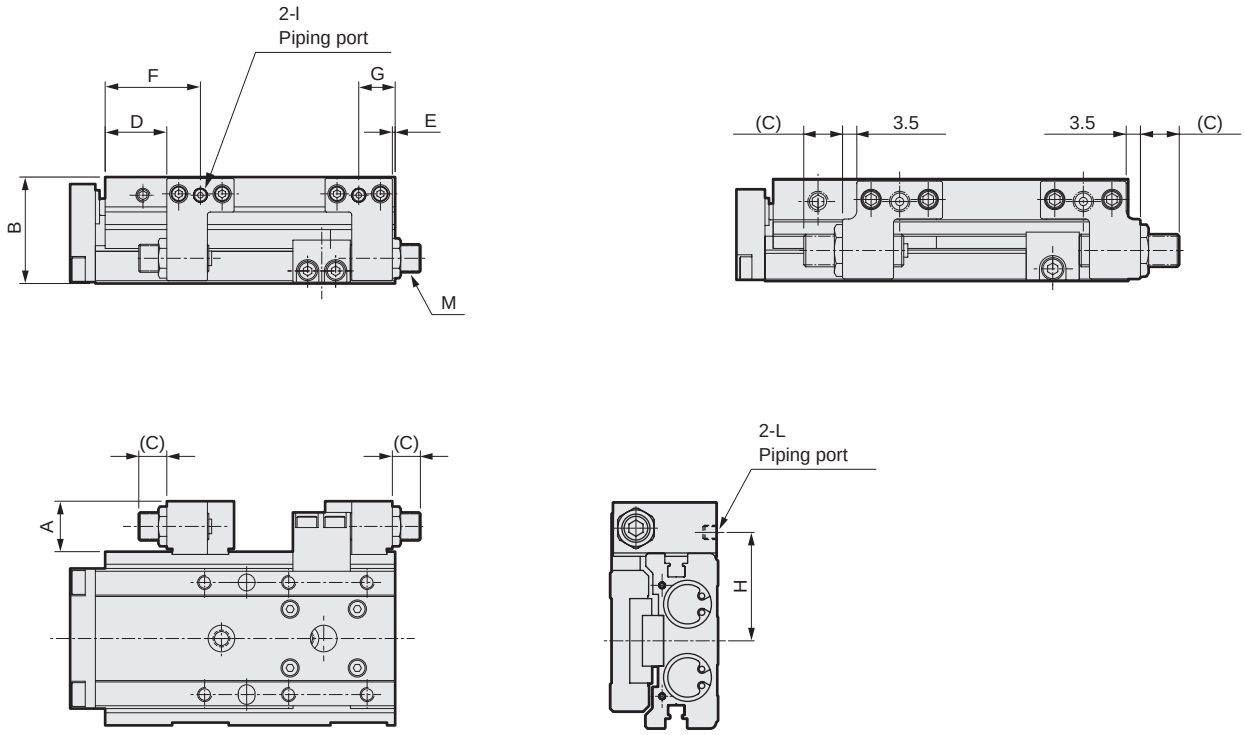

*1: F, G, H, I and L dimensions are only for the types with port on the stopper (S*D*).

Code / Bore size (mm)	A	B	C			D	E	F	G	H	I	L	M
			Adjustable range of stroke										
			5 mm	15 mm	25 mm								
ø6	14	19.5	11	21	–	16	1	25.5	10.5	24	M3 depth 3	M3 depth 3	M8 × 0.75
ø8	15.6	24.5	9.5	19.5	–	20.5	0.5	30.5	10.5	27.3	M5 depth 4	M5 depth 4	M8 × 0.75
ø12	15.5	29	12	22	32	21	1	33	13	31	M5 depth 4	M5 depth 4	M8 × 0.75
ø16	18	37	10	20	30	22	1	34	13	39	M5 depth 4	M5 depth 4	M10 × 1
ø20	20.5	45	14.5	24.5	34.5	29	2.5	45.5	19	46	Rc1/8	M5 depth 4	M12 × 1
ø25	20.5	57	11.5	21.5	31.5	27.5	2.5	44	19	54.5	Rc1/8	M5 depth 4	M12 × 1

MEMO

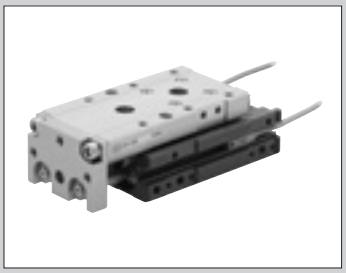

Linear slide cylinder Double acting/fine speed

LCR-F Series

● Bore size: ø12/ø16/ø20/ø25

JIS symbol

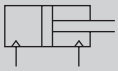

RoHS

Structure and material restriction

	Structure	Model No.
P7 Series	Exhaust treatment	P72
	Vacuum treatment	P73

Specifications

Descriptions		LCR-F			
Bore size mm		ø12	ø16	ø20	ø25
Actuation		Double acting			
Working fluid		Compressed air			
Max. working pressure MPa		0.7			
Min. working pressure MPa		0.15 (*3)			
Proof pressure MPa		1.05			
Ambient temperature °C		5 to 60			
Port size	Main body side	M5		Rc1/8	
	Main body rear	M3		M5	Rc1/8
Port size (relief port)		M5		Rc1/8	
Stroke tolerance mm		$^{+2.0}_{0}$ (*1)			
Working piston speed mm/s		5 to 200 (0.5 MPa with no load)			
Cushion		With rubber cushion			
Lubrication		Not available			
Allowable energy absorption J		Refer to table 2 on page 132.			

*1: Note that there will be a slight gap between the end plate and floating bush if no stopper is attached.
*2: The stroke adjusting stopper for 0.3 MPa and over working pressure is the metal sealing.

Stroke

Bore size (mm)	Standard stroke (mm)
ø12	10, 20, 30, 40, 50, 75, 100
ø16	10, 20, 30, 40, 50, 75, 100, 125
ø20	10, 20, 30, 40, 50, 75, 100, 125, 150
ø25	10, 20, 30, 40, 50, 75, 100, 125, 150

Note: The stroke other than above is not available.

Dimensions

Same as double acting/single rod clean room specifications. Refer to pages 118 to 126.

Theoretical thrust table

Refer to page 133.

Switch specifications

● 1-color/2-color display

Descriptions	Reed 2-wire				Proximity 2-wire		Proximity 3-wire		
	T0H/T0V		T5H/T5V		T2H/T2V	T2WH/T2WV	T3H/T3V	T3PH/T3PV	T3WH/T3WV
Applications	Programmable controller, relay		Programmable controller, relay IC circuit (without indicator lamp), serial connection		Programmable controller		Programmable controller, relay		
Output method	-		-		-		NPN output	PNP output	NPN output
Power supply voltage	-		-		-		10 to 28 VDC		
Load voltage	12/24 VDC	110 VAC	5/12/24 VDC	110 VAC	10 to 30 VDC	24 VDC ±10%	30 VDC or less		
Load current	5 to 50 mA	7 to 20 mA	50 mA or less	20 mA or less	5 to 20 mA (*2)		100 mA or less		50 mA or less
Indicator lamp	LED (Lit when ON)		Without indicator lamp		LED (Lit when ON)	Red/green LED (Lit when ON)	LED (Lit when ON)	Yellow LED (Lit when ON)	Red/green LED (Lit when ON)
Leakage current	0 mA				1 mA or less		10 μA or less		
Weight g	1 m: 18 3 m: 49 5 m: 80								

Descriptions	Proximity 2-wire	Proximity 3-wire	Proximity 2-wire		Proximity 3-wire		
	F2S	F3S	F2H/F2V	F2YH/F2YV	F3H/F3V	F3PH/F3PV (custom order)	F3YH/F3YV
Applications	Programmable controller	Programmable controller, relay	Programmable controller		Programmable controller, relay		
Output method	-	NPN output	-		NPN output	PNP output	NPN output
Power supply voltage	-	10 to 28 VDC	-		10 to 28 VDC	4.5 to 28 VDC	10 to 28 VDC
Load voltage	10 to 30 VDC	30 VDC or less	10 to 30 VDC	24 VDC ±10%	30 VDC or less		
Load current	5 to 20 mA	50 mA or less	5 to 20 mA (*2)		100 mA or less	50 mA or less	
Indicator lamp	Red LED (Lit when ON)		LED (Lit when ON)	Red/green LED (Lit when ON)	LED (Lit when ON)	Yellow LED (Lit when ON)	Red/green LED (Lit when ON)
Leakage current	1 mA or less	10 μA or less	1 mA or less		10 μA or less		
Weight g	1 m: 10 3 m: 29						

*1: Refer to page 309 for detailed switch specifications and dimensions.
*2: Max. load current: 20mA at 25°C.The current is lower than 25 mA if the operating ambient temperature around the switch is higher than 20˚C. (60 to 5 mA at 10°C.)
*3: The F type switch uses a bend-resistant lead wire.

Cylinder weight

● Clean room specifications (Unit: g)

Bore size (mm)	Fine speed stroke (mm)								
	10	20	30	40	50	75	100	125	150
ø12	400	410	410	450	480	610	700	-	-
ø16	620	630	630	680	740	970	1,100	1,240	-
ø20	1,160	1,170	1,180	1,260	1,350	1,650	1,860	2,070	2,280
ø25	2,010	2,030	2,040	2,150	2,250	2,740	3,010	3,280	3,550

● Weight of variation/option (stopper) (Unit: g)

Bore size (mm)	Option/stopper code	
	S1 to S4	S5/S6
ø12	70	100
ø16	110	150
ø20	170	250
ø25	290	380

How to order

Without switch (Magnet for switch incorporated)

LCR-F - 12 - 40 ——— S506 DT P72

With switch (Magnet for switch incorporated)

LCR-F - 12 - 40 - F2H* - R - S506 DT P72

- Model No.
- Ⓐ Bore size
- Ⓑ Stroke
- Ⓒ Switch model No.
- Ⓓ Switch quantity
- Ⓔ Stopper
- Ⓕ Option
- Ⓖ Clean room specifications

Precautions for model No. selection

*1: For the port position, refer to the stopper dimensions on page 126.
*2: The port positions of the standard without stopper are (1) and (3) in the figure below.
*3: Can be selected for the type with stopper only.
*4: Select when using rear piping.
*5: The stroke adjusting stopper for 0.3 MPa and over working pressure is the metal sealing.
*6: When changing the stopper position from the head side to the rod side, another discrete stopper may be required to be purchased depending on the stroke or the stroke adjustment amount.
For details, please consult our sales staff.
For some strokes, the adjustment amount of 15 mm or 25 mm is not allowed.

[Example of model No.]

LCR-F-12-40-F2H-R-S1DTP72

Model: Linear slide cylinder Double acting/single rod/Fine speed (clean room specifications) LCR-P7*

- Ⓐ Bore size : ø12
- Ⓑ Stroke : 40 mm
- Ⓒ Switch model No. : Proximity/2 wires/Lead wire 1 m Lead wire straight
- Ⓓ Switch quantity : 1 (on rod end)
- Ⓔ Stopper : Stroke adjusting stopper Stopper position (1)
- Ⓕ Option : Side port on stopper/Bottom port on stopper. Stopper block material: steel (nitriding)
- Ⓖ Clean room specifications : Exhaust treatment

● Stopper position

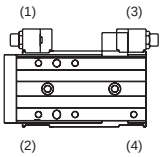

Code	Content
Ⓐ Bore size	
12	ø12
16	ø16
20	ø20
25	ø25

Ⓑ Stroke (mm)

		Bore size (ø)			
		12	16	20	25
10	10	●	●	●	●
20	20	●	●	●	●
30	30	●	●	●	●
40	40	●	●	●	●
50	50	●	●	●	●
75	75	●	●	●	●
100	100	●	●	●	●
125	125		●	●	●
150	150			●	●

Ⓒ Switch model No.

Lead wire straight	Lead wire L-shaped	Contact	Display	Lead wire	Bore size ø12	ø16	ø20	ø25
F2S*		Proximity	1-color display	2 wires	●			
F3S*				3 wires				
F2H*	F2V*			2 wires				
F3H*	F3V*			3 wires				
F3PH*	F3PV*		1-color display (custom order)					
F2YH*	F2YV*		2-color display	2 wires				
F3YH*	F3YV*			3 wires				
T0H*	T0V*	Reed	1-color display Without indicator lamp	2 wires		●	●	●
T5H*	T5V*							
T2H*	T2V*	Proximity	1-color display	2 wires				
T3H*	T3V*			3 wires				
T3PH*	T3PV*		1-color display (PNP output)	3 wires				
T2WH*	T2WV*		2-color display	2 wires				
T3WH*	T3WV*			3 wires				

Lead wire length

Blank	1 m (standard)	●	
3	3 m (option)	●	
5	5 m (option)		●

Ⓓ Switch quantity

R	1 (on rod end)	●
H	1 (on head end)	●
D	2	●

Ⓔ Stopper

Blank	No option		●
S Stroke adjusting stopper 5 mm stroke adjustment on one side			
S1**	Stopper position (1) (can be changed to (4))	Stopper mounting position	●
S2**	Stopper position (2) (can be changed to (3))		●
S3**	Stopper position (3) (can be changed to (2))		●
S4**	Stopper position (4) (can be changed to (1))		●
S5**	Stopper position (1), (3)		●
S6**	Stopper position (2), (4)		●

** Part Adjustable stroke range ● Applies to all. ▲ Applies to some. *3

	Extended end	Return end	
Blank	5 mm or none	5 mm or none	●
02	15 mm or none	15 mm or none	●
03	25 mm or none	25 mm or none	●
04	15 mm	5 mm	▲
05	25 mm	5 mm	▲
06	5 mm	15 mm	▲
07	5 mm	25 mm	▲

Ⓕ Option

Blank	Port on the stopper: No port	●
D	Port on the stopper: Side and bottom ports	● *1, *3
Blank	Stopper block material: steel	●
T	Stopper block material: steel (nitriding)	● *3
Plug attached		
Blank	None	
N	With side piping port plug (not available for ø25) *4	

Ⓖ Clean room specifications

	Structure
P72	Exhaust treatment
P73	Vacuum treatment

How to select stopper

Stopper combination table

Model No.−[(1) (2) stopper] [(3) adjustable stroke range]

Example) LCR-8-40-[S5] [06]-P7*

Stroke adjusting stopper S

Adjustable stroke range model No. [(3)]	Stopper adjusting range: Extended end	Stopper adjusting range: Return end	Stopper model No. [(1) (2)]: [S1]	[S2]	[S3]	[S4]	[S5]	[S6]
Blank	5 mm or none	5 mm or none	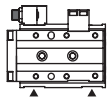 [S1]	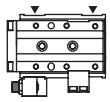 [S2]	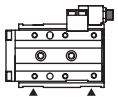 [S3]	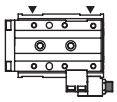 [S4]	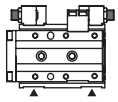 [S5]	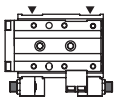 [S6]
[02]	15 mm or none	15 mm or none	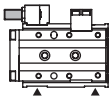 [S102]	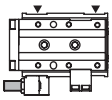 [S202]	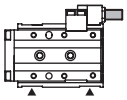 [S302]	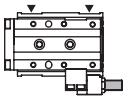 [S402]	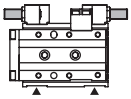 [S502]	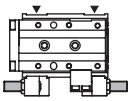 [S602]
[03]	25 mm or none	25 mm or none	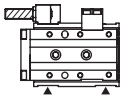 [S103]	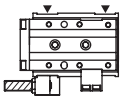 [S203]	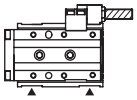 [S303]	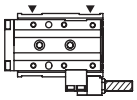 [S403]	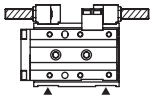 [S503]	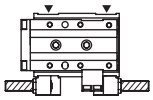 [S603]
[04]	15 mm	5 mm					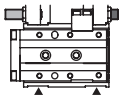 [S504]	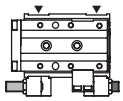 [S604]
[05]	25 mm	5 mm					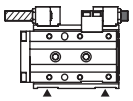 [S505]	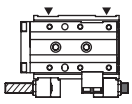 [S605]
[06]	5 mm	15 mm					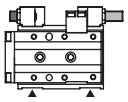 [S506]	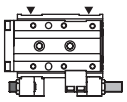 [S606]
[07]	5 mm	25 mm					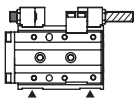 [S507]	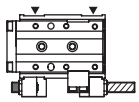 [S607]

: Stroke adjusting stopper (adjusting range: 5 mm)
: Stroke adjusting stopper (adjusting range: 15 mm)
: Stroke adjusting stopper (adjusting range: 25 mm)

▲ shows the piping direction.

Available combination table

●: Available -: Unavailable

Bore size (mm)		Stopper code																								
		S1			S2			S3			S4			S5							S6						
		Adjustment length code																								
		Blank	02	03	Blank	02	03	Blank	02	03	Blank	02	03	Blank	02	03	04	05	06	07	Blank	02	03	04	05	06	07
ø12 to ø25	10st	●	-	-	●	-	-	●	●	-	●	●	-	●	-	-	-	-	●	-	●	-	-	-	-	●	-
	20st	●	●	-	●	●	-	●	●	●	●	●	●	●	●	-	●	-	●	●	●	●	-	●	-	●	●
	30st or more	●	●	●	●	●	●	●	●	●	●	●	●	●	●	●	●	●	●	●	●	●	●	●	●	●	●

SCPD3
SCM
SSD2
MDC2
SMG
LCM
LCR
LCG
LCX
STM
STG
STR2
MRL2
GRC
Cylinder switch
MN3E MN4E
4GA/B
M4GA/B
MN4GA/B
F.R (module unit)
Clean F.R
Precision R
Press gauge Diff. press gauge
Electro-pneumatic R
Speed controller
Auxiliary valve
Fitting/ tube
Clean air unit
Pressure sensor
Flow rate sensor
Valve for air blow
Ending

STEP-1

❶ Calculate the load and the moment of impact occurring at the stroke end in different directions.

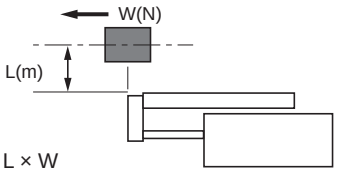

M1' = L × W

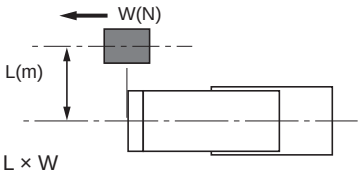

M3' = L × W

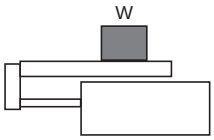

W' = W

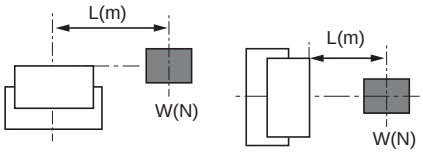

M2' = L × W

Obtain an approximate G coefficient in (Table 1).

(Table 1) Va (average speed) = $\frac{\text{Distance traveled}}{\text{Time traveled}}$ (m/s)

Va average speed (m/s)	Vm Stroke end speed (m/s)	G coefficient
up to 0.07	up to 0.1	5
up to 0.2	up to 0.3	14
up to 0.27	up to 0.4	19
up to 0.35	up to 0.5	24

G coefficient = ☐

M1' × G = ☐ (N·m)

M2' = ☐ (N·m)

M3' × G = ☐ (N·m)

W' = ☐ (N)

$E' = \frac{1}{2} \times (m + m_\alpha) \times Vm^2$

= ☐ (J)

$(m \fallingdotseq \frac{W}{9.8})$

❷ Select a temporary bore size that satisfies the following formula.

$$M'_T = \frac{M1' \times G}{M1'max} + \frac{M2'}{M2'max} + \frac{M3' \times G}{M3'max} + \frac{W'}{W'max} < 1$$

E' < E max

M'T : Resultant moment (must be smaller than 1)

G : G coefficient

W'max : Maximum allowable value of W' (from Table 2)

M1'max : Maximum allowable value of M1' (from Table 2)

M2'max : Maximum allowable value of M2' (from Table 2)

M3'max : Maximum allowable value of M3' (from Table 2)

Emax : Maximum allowable value of Eo (from Table 3)

m_α : Table weight (from Table 4)

(Table 2) Allowable static load

Bore size	Stroke (mm)	Vertical load W'max (N)	Bending moment M1'max (N·m)	Radial moment M2'max (N·m)	Twist moment M3'max (N·m)
ø6	10 to 30	140	1.7	3.5	1.7
	40 to 50	186	10.7	5.6	10.7
ø8	10 to 30	140	1.7	3.5	1.7
	40 to 75	186	10.7	5.6	10.7
ø12	10 to 50	220.8	5.7	9.8	5.7
	75 to 100		22.2		22.2
ø16	10 to 50	380.8	17.8	19.2	17.8
	75 to 125		37.3		37.3
ø20	10 to 50	548.8	31.1	37.6	31.1
	75 to 150		56.2		56.2
ø25	10 to 50	961.5	65.1	116.3	65.1
	75 to 150		127.5		127.5

Note: When attaching a load to the end plate, even if selecting long stroke (ø6, 8: 40 or more, ø12 or more: 75 or more), calculate the allowable values with short stroke (ø6, 8: 30 or less, ø12 or more: 50 or less).

(Table 3) Allowable absorbed energy value of LCR (Eo)

Bore size	Standard (J)	With stroke adjusting stopper (J)
ø6	0.025	0.0032
ø8	0.058	0.0032
ø12	0.112	0.014
ø16	0.176	0.043
ø20	0.314	0.055
ø25	0.314	0.14

(Table 4) Table weight (Unit: kg)

Bore size	Stroke (mm)									P72/P73 Increment
	10	20	30	40	50	75	100	125	150	
ø6	0.035	0.035	0.04	0.05	0.055	-	-	-	-	0.005
ø8	0.055	0.055	0.06	0.075	0.08	0.095	-	-	-	0.015
ø12	0.13	0.13	0.13	0.14	0.155	0.195	0.225	-	-	0.025
ø16	0.185	0.185	0.185	0.2	0.215	0.285	0.325	0.365	-	0.035
ø20	0.29	0.29	0.29	0.315	0.335	0.415	0.47	0.525	0.585	0.045
ø25	0.505	0.505	0.505	0.54	0.58	0.745	0.835	0.925	1.015	0.075

STEP-2

Obtain a more accurate load factor, effectiveness thrust, stroke end speed and resultant moment.

● Calculate the load factor.

$$\alpha = \frac{Fo}{F} \times 100\ [\%]$$

α : Load factor

Fo : Force (N) required to move the workpiece

F : Theoretical cylinder thrust (N) (Table 5)

For horizontal operation	For vertical operation
Fo = Fw	Fo = W + Fw
FW : W × 0.2 Note (N)	
W : Load (N)	

Note : Coefficient of friction

(Table 5) Theoretical thrust table (Unit: N)

Bore size (mm)	Operating direction	Working pressure MPa						
		0.15	0.2	0.3	0.4	0.5	0.6	0.7
ø6	PUSH	8	11	17	23	28	34	40
	PULL	6	8	13	17	21	25	30
ø8	PUSH	15	20	30	40	50	60	70
	PULL	11	15	23	30	38	45	53
ø12	PUSH	34	45	68	90	113	136	158
	PULL	25	34	51	68	85	102	119
ø16	PUSH	60	80	121	161	201	241	281
	PULL	52	69	104	138	173	207	242
ø20	PUSH	94	126	188	251	314	377	440
	PULL	79	106	158	211	264	317	369
ø25	PUSH	147	196	295	393	491	589	687
	PULL	124	165	247	330	412	495	577

(Table 6) Rough indication of load factor

Working pressure MPa	Load factor (%)
0.2 to 0.3	α ≦ 40
0.3 to 0.6	α ≦ 50
0.6 to 0.7	α ≦ 60

STEP-3

Obtain the stroke end speed (Vm) and G coefficient from the average speed (Va) and load factor obtained in STEP-2.

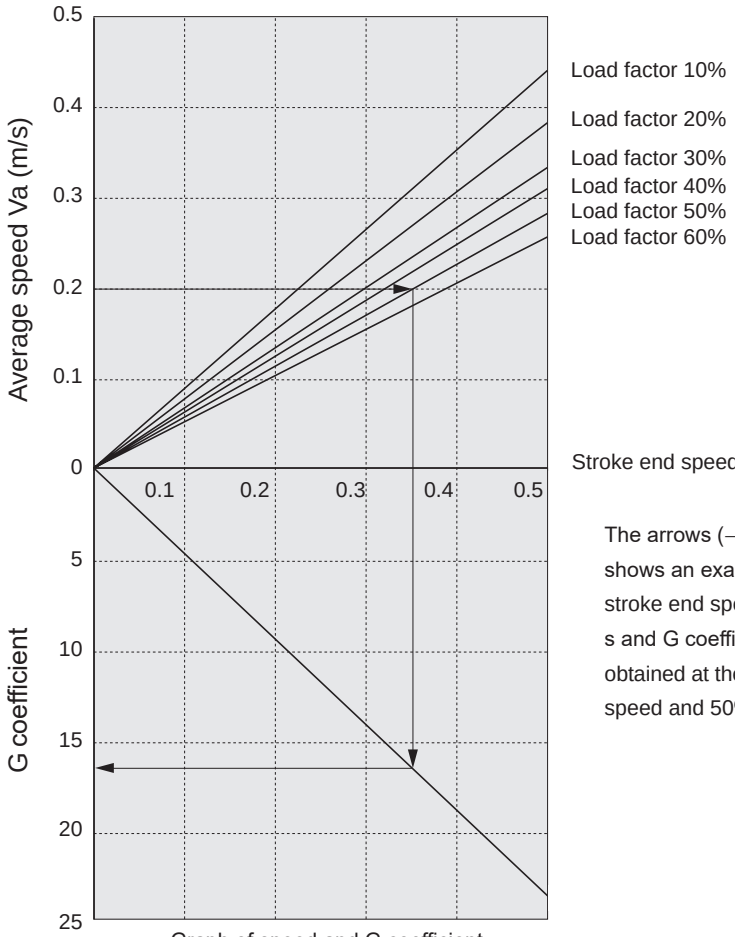

Graph of speed and G coefficient
G coefficient = ☐

The arrows (→) in the figure shows an example that the stroke end speed of 0.35 m/s and G coefficient of 16.8 are obtained at the 0.20 m/s average speed and 50% load factor.

SCPD3
SCM
SSD2
MDC2
SMG
LCM
LCR
LCG
LCX
STM
STG
STR2
MRL2
GRC
Cylinder switch
MN3E MN4E
4GA/B
M4GA/B
MN4GA/B
F.R (module unit)
Clean F.R
Precision R
Press gauge Diff. press gauge
Electro-pneumatic R
Speed controller
Auxiliary valve
Fitting/ tube
Clean air unit
Pressure sensor
Flow rate sensor
Valve for air blow
Ending

STEP-4

Calculate the resultant moment (M_T) from the G factor and stroke end speed (Vm) obtained at STEP-3.

M1' × G = ☐ (N·m)

M2' = ☐ (N·m)

M3' × G = ☐ (N·m)

W' = ☐ (N)

$$M'_T = \frac{M1' \times G}{M1'max} + \frac{M2'}{M2'max} + \frac{M3' \times G}{M3'max} + \frac{W'}{W'max} = \square$$

Obtain M_T (resultant moment during movement). (Note that it differs from what you obtain in STEP-1.)

● Vertical load: W (N)

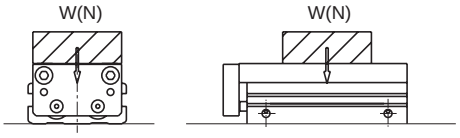

● Bending moment: M1 (N·m)

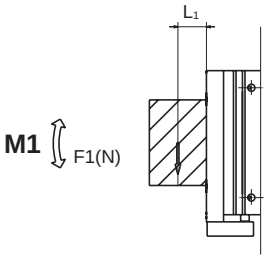

$M1 = F1 \times L_1$

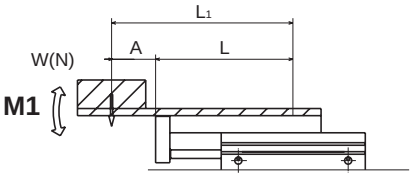

$M1 = W \times L_1$

$L_1 = A + L$

L is a value in the table below.

● Radial moment: M2 (N·m)

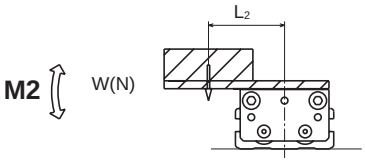

$M2 = W \times L_2$

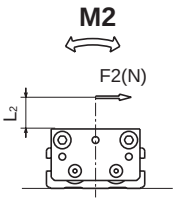

$M2 = F2 \times L_2$

● Twist moment: M3 (N·m)

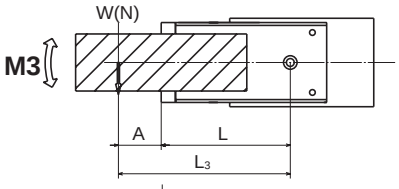

$M3 = W \times L_3$

$L_3 = A + L$

L is a value in the table below.

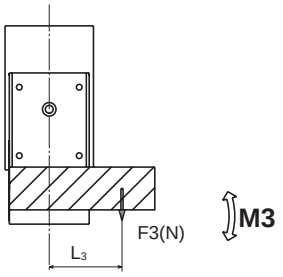

$M3 = F3 \times L_3$

L value

Unit (m)

Bore size	Stroke									P72/P73 Increment
	10	20	30	40	50	75	100	125	150	
ø6	0.048	0.048	0.058	0.073	0.083	-	-	-	-	0.012
ø8	0.048	0.048	0.058	0.072	0.082	0.107	-	-	-	0.020
ø12	0.067	0.067	0.067	0.077	0.087	0.117	0.142	-	-	0.020
ø16	0.071	0.071	0.071	0.081	0.091	0.124	0.149	0.174	-	0.020
ø20	0.081	0.081	0.081	0.091	0.101	0.126	0.151	0.176	0.201	0.025
ø25	0.085	0.085	0.085	0.095	0.105	0.14	0.165	0.19	0.215	0.025

M1 = M1 = ☐ (N·m)

M2 = M2 = ☐ (N·m)

M3 = M3 = ☐ (N·m)

W = W = ☐ (N)

$$M_T = \frac{M1}{M1max} + \frac{M2}{M2max} + \frac{M3}{M3max} + \frac{W}{Wmax} = \square$$

MT : Synthesis of moment

Wmax: Maximum allowable value of W (from Table 7)

M1max: Maximum allowable value of M1 (from Table 7)

M2max: Maximum allowable value of M2 (from Table 7)

M3max: Maximum allowable value of M3 (from Table 7)

E max: Maximum allowable value of Eo (from Table 3)

(Table 7) Allowable moving load

Bore size	Stroke (mm)	Vertical load Wmax (N)	Bending moment M1max (N·m)	Radial moment M2max (N·m)	Twist moment M3max (N·m)
ø6	10 to 30	14	0.17	0.35	0.17
	40 to 50	15.5	0.89	0.47	0.89
ø8	10 to 30	14	0.17	0.35	0.17
	40 to 75	15.5	0.89	0.47	0.89
ø12	10 to 50	27.6	0.71	1.2	0.71
	75 to 100		2.2		2.2
ø16	10 to 50	47.6	1.9	2.4	1.9
	75 to 125		4.6		4.6
ø20	10 to 50	68.6	3.4	4.7	3.4
	75 to 150		7.0		7.0
ø25	10 to 50	128.2	7.6	15.5	7.6
	75 to 150		17.0		17.0

Note: When attaching a load to the end plate, even if selecting long stroke (ø6, 8: 40 or more, ø12 or more: 75 or more), calculate the allowable values with short stroke (ø6, 8: 30 or less, ø12 or more: 50 or less).

Confirm M_T, $M'_T \leqq 1$.
↓
Bore size is decided.
↓
øA

STEP-5

Check of the allowable absorbed energy

$$E = \frac{1}{2} \times (m + m_\alpha) \times Vm^2$$

E : Kinetic energy at workpiece end (J)

m : Load weight (kg) ($m \fallingdotseq \frac{W\ (N)}{9.8}$)

m_α : Table weight (from Table 4)

Vm : Stroke end speed (m/s)

E max : Maximum allowable value of Eo (from Table 3)

Confirm E ≦ E max.
↓
Bore size is decided.
↓
øB

STEP-6

Bore size decided in STEP-4 (load conditions)
øA

Bore size decided in STEP-5 (allowable absorbed energy)
øB

øA ≦ øB → øB is selected.

or → øA and external damper are used together or a shock absorber stopper is attached.

øA > øB → øA is selected.

Technical data ❶: Displacement at the table end (reference value)

SCPD3
SCM
SSD2
MDC2
SMG
LCM
LCR
LCG
LCX
STM
STG
STR2
MRL2
GRC
Cylinder switch
MN3E MN4E
4GA/B
M4GA/B
MN4GA/B
F.R (module unit)
Clean F.R
Precision R
Press gauge Diff. press gauge
Electro-pneumatic R
Speed controller
Auxiliary valve
Fitting/ tube
Clean air unit
Pressure sensor
Flow rate sensor
Valve for air blow
Ending

Displacement at point A

[Displacement of the table due to M1 moment]

Displacement at the table end when the load (F1) is applied to the table end

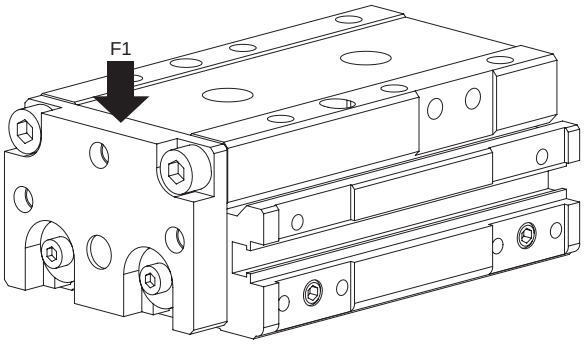

LCR-6 (M1)

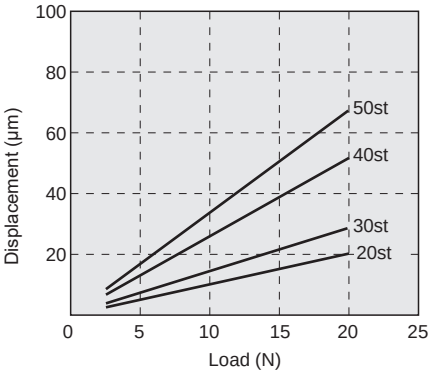

LCR-8 (M1)

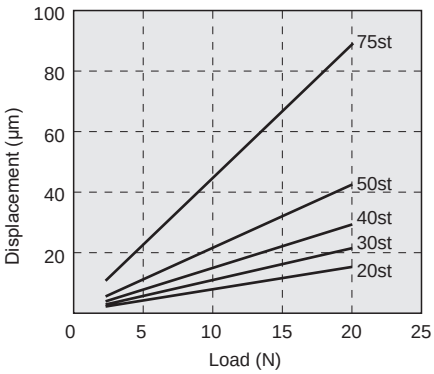

LCR-12 (M1)

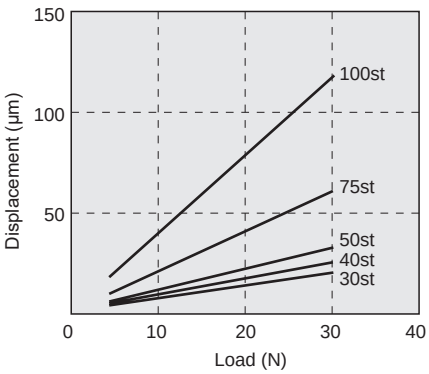

LCR-16 (M1)

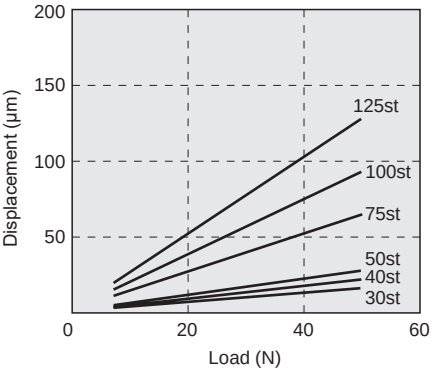

LCR-20 (M1)

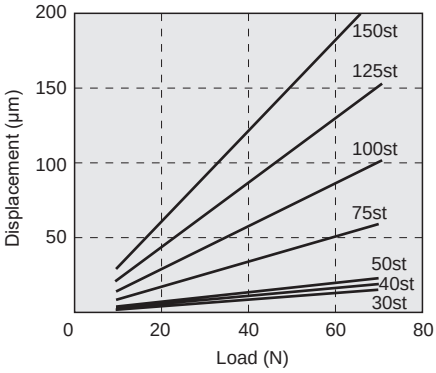

LCR-25 (M1)

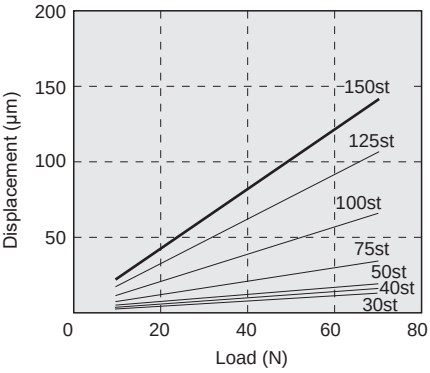

Displacement at point A

[Displacement of the table due to M2 moment]

Displacement at the table end (point A) when the load (F2) is applied to the point L mm away from the center of the cylinder

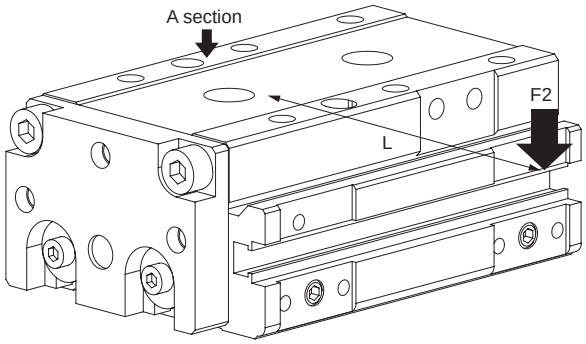

L value
ø 6: L = 70, ø 8: L = 70
ø12: L = 90, ø16: L = 100
ø20: L = 100, ø25: L = 200

LCR-6 (M2)

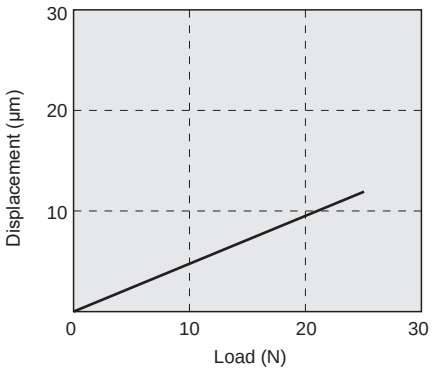

LCR-8 (M2)

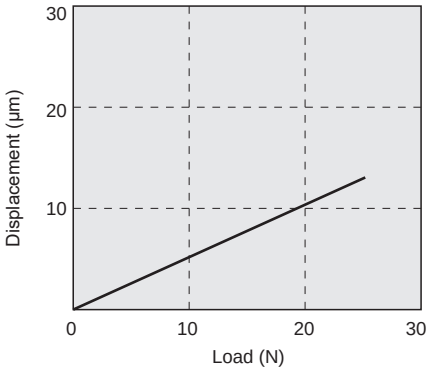

LCR-12 (M2)

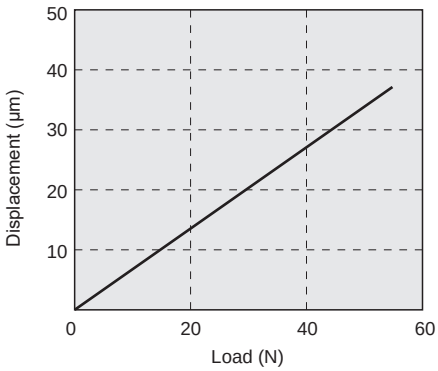

LCR-16 (M2)

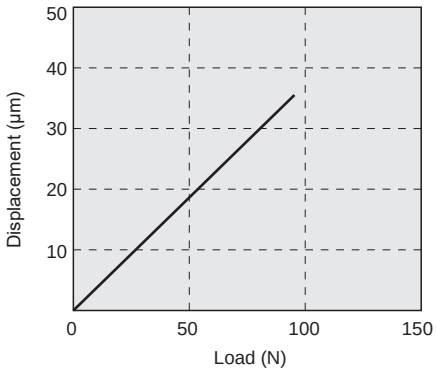

LCR-20 (M2)

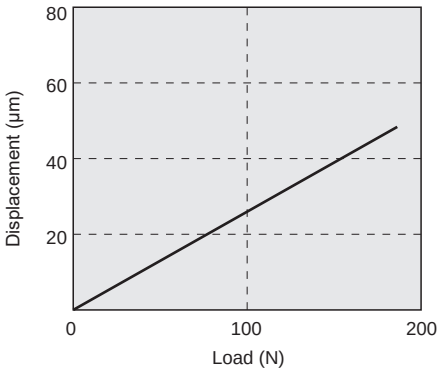

LCR-25 (M2)

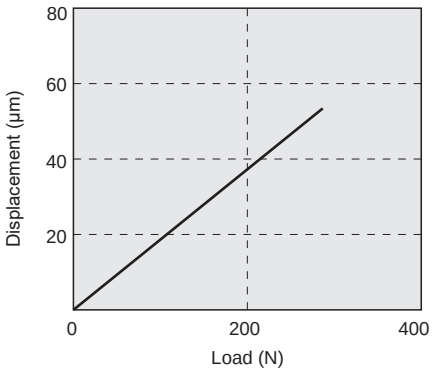

Technical data ❶: Displacement at the table end (reference value)

Displacement at point A

[Angular table deflection due to M3 moment]

Displacement angle of the table when the rotation moment (M3) is applied to the cylinder

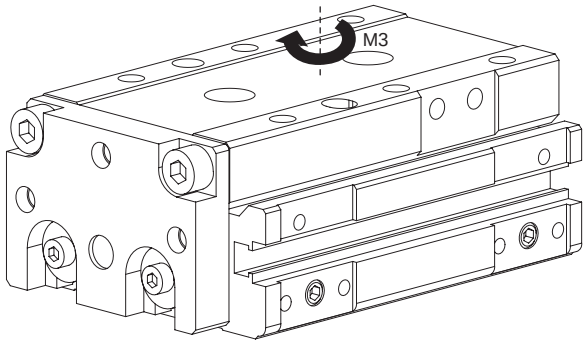

LCR-6 (M3)

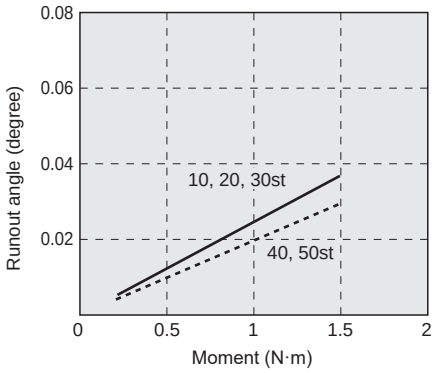

LCR-8 (M3)

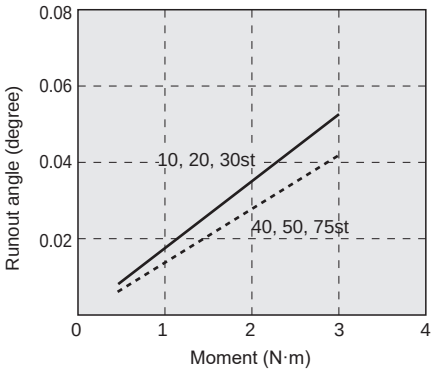

LCR-12 (M3)

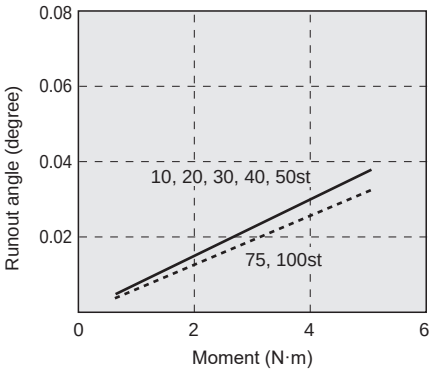

LCR-16 (M3)

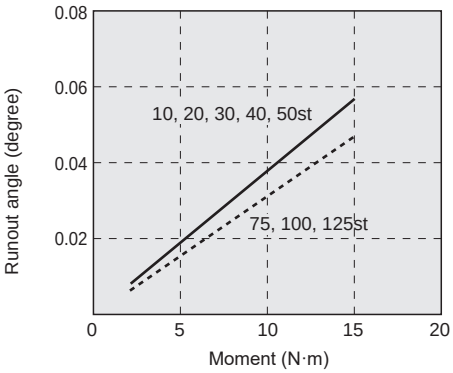

LCR-20 (M3)

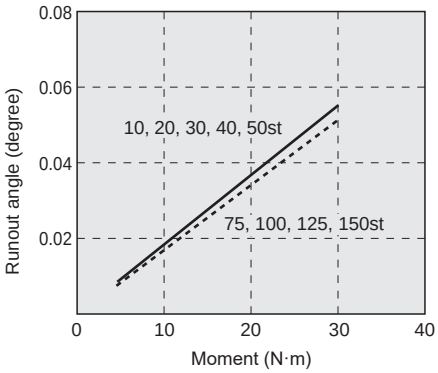

LCR-25 (M3)

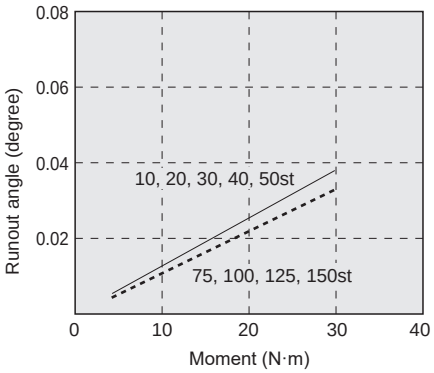

Pneumatic components

Safety Precautions

Always read this section before use.
Refer to page 2 for general information of the cylinder, and to page 320 for general information of the cylinder switch.

Linear slide cylinder LCR Series

Design & selection

1. Common

CAUTION

■ When selecting the cylinder, follow the "LCR Selection guide" on pages 132 to 135.

■ Protect the cylinder with a cover to prevent damage and malfunction in a place where it is exposed to water or oil drops, or corrosive conditions.

■ Precautions for mounting the switch
- When using the T□V switch with a stroke adjusting stopper (S3**/S4**/S5**/S6**) or shock absorber stopper (A3**/A4**/A5**/A6**), install the switch on the opposite side to the stopper. Otherwise the switch on the head end will contact with the stopper.
- Be careful of the lead wire direction when designing the 30 mm or less stroke since a switch is installed in each groove of the body.

2. Fine speed LCR-F

CAUTION

■ Use without lubrication.
Application of lubrication may cause changes in characteristics.

■ Assemble the speed control valve near the cylinder.
When installed at a distant place from the cylinder, the speed becomes unstable.
Use the SC3R-M3/M5, SC3W, SCD-M3/M5 Series speed controllers.

■ In general, the speed is stabler at higher air pressure and lower load factor.
Use at a 50% or less load factor.

■ Stable speed control is achieved with a meter-out circuit.

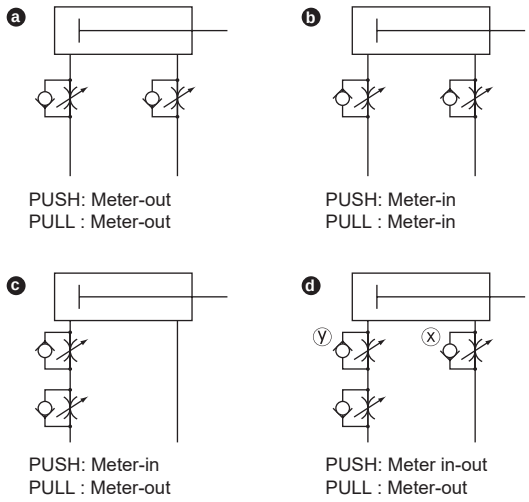

When the fine speed activation is performed while the operating direction is PUSH for the single rod cylinder, the popping out phenomenon occurs at the beginning of the operation in case the load resistance is small. For this countermeasures, use the b, c or d.
Note that circuit d is most stable.
Speed adjustment method for PUSH operation of d circuit:
1. Set the speed with the speed controller x.
2. Restrict the speed with the speed controller y until there is no popping out.
3. Check the speed again.

(Note 1) When comparing b c d, operation is the most stable with d circuit.
(Note 2) For vertical mounting, combine the cylinder with a meter-out circuit, as it will fall under its own weight when a meter-in circuit is used.

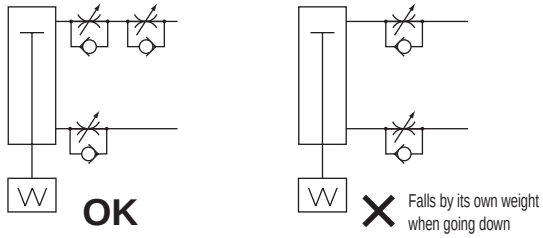

(Note 3) Use the circuit as shown in the figure below for the serial connection of the speed controllers.

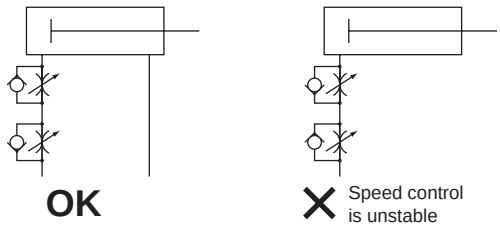

(Guidelines for pop-out generation)
Popping out occurs in the following cases.
• Thrust > Resistance

*** Resistance: Thrust caused by residual pressure on the exhaust side (in the fine speed, supply pressure = residual pressure)** + **When using horizontally: frictional force caused by load**
When using vertically: load self-weight

Design & selection

■ Do not apply a lateral load to the cylinder.
With a lateral load, operation will become unstable.

■ Avoid using this product where vibration is present.
The product will be adversely affected by vibration and operation will become unstable.

Mounting Installation & adjustment

1. Common; when piping

⚠CAUTION

■ Apply adhesive to the M3 and M5 plugs (hexagon socket set screws) when changing the piping port position. (Low strength adhesives such as LOCTITE 222/221 or ThreeBond 1344 are recommended)

■ Piping port position and operating direction

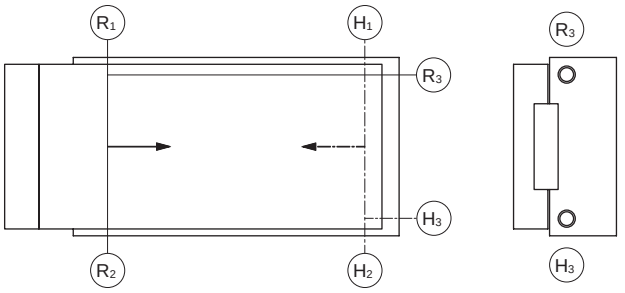

Ⓡ indicates the pressurized ports on the rod side and Ⓗ indicates the pressurized ports on the head side. When the product is shipped from the factory, ports other than R_1 and H_1 (R_2 and H_2 depending on the stopper position when a stopper is attached) are sealed with plugs.

■ Rear piping
Rear piping (ports R_3 and H_3 in the figure above) is possible except in the case of ø6 and position locking.
Remove the plugs sealing ports R_3 and H_3 and seal ports R_1 and H_1 with the plugs shown in the table below.

Descriptions	Plug
LCR-6	R_3, H_3 ports not available.
LCR-8	M5 × 5 (hexagon socket set screw)
LCR-12	
LCR-16	
LCR-20	R1/8 (hexagon socket head tapered screw plug)
LCR-25	Seal the R_3 and H_3 ports with the plugs removed from the R_3 and H_3 ports.

Prepare two separate plugs shown in the table above for ø8 to 20. Option with plug (refer to page 112) or discrete plug model No. (refer to page 68) are also available.

■ Precautions for piping fittings
Be sure to attach a speed controller during piping before use. The available fittings are as below.

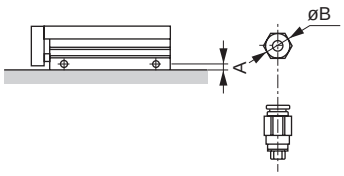

Descriptions / Bore size (mm)	Port diameter	Port location dimensions A	Applicable fitting	Fitting O.D. B
ø6	M3	4	SC3W-M3-4-P7* SC3W-M3-3.2-P7* GWS3-M3-S-P7* GWS4-M3-S-P7*	ø8 or less
ø8	M5	5.5	SC3W-M5-4-P7* SC3W-M5-6-P7* GWS4-M5-S-P7* GWS4-M5-P7*	ø11 or less
ø12		5.5		
ø16		6.5	SC3W-M5-4-P7* SC3W-M5-6-P7* GWS4-M5-S-P7* GWS4-M5-P7* GWL4-M5-P7* GWL6-M5-P7* GWS6-M5-P7*	ø13 or less
ø20	Rc1/8	8	SC3W-6-4, 6, 8-P7* GWS4-6-P7* GWS8-6-P7* GWL6-6-P7* GWS6-6-P7* GWL4-6-P7*	ø15 or less
ø25		9		

2. Common; when installing

⚠CAUTION

■ Do not damage the surface flatness by denting or scratching the body (tube) mounting surface or the table surface.
In addition, make sure that the flatness of the mating surface for body and table mounting is 0.02 mm or less.

■ Observe the following bolt insertion lengths and tightening torque when mounting the body.
[Fig. 1]

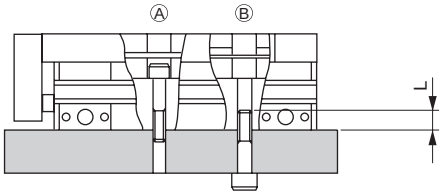

Descriptions	Ⓐ Applicable bolts	Ⓐ Tightening torque (N·m)	Ⓑ Applicable bolts	Ⓑ Tightening torque (N·m)	Max. insertion length L (mm)
LCR-6	M3 × 0.5	0.6 to 1.1	M4 × 0.7	1.4 to 2.4	6
LCR-8	M3 × 0.5	0.6 to 1.1	M4 × 0.7	1.4 to 2.4	6
LCR-12	M4 × 0.7	1.4 to 2.4	M5 × 0.8	2.9 to 5.1	8
LCR-16	M5 × 0.8	2.9 to 5.1	M6 × 1.0	4.8 to 8.6	9
LCR-20	M5 × 0.8	2.9 to 5.1	M6 × 1.0	4.8 to 8.6	9
LCR-25	M6 × 1.0	4.8 to 8.6	M8 × 1.25	12.0 to 21.6	12

Mounting, installation & adjustment

■ Observe the following bolt insertion lengths and tightening torque when installing the jig on the slide table or end plate.
[Fig. 2]

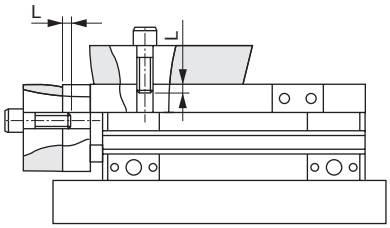

Descriptions	Table		
	Applicable bolts	Tightening torque (N·m)	Insertion length L (mm)
LCR-6	M3 × 0.5	0.6	3
LCR-8	M3 × 0.5	0.6	3 to 4.5
LCR-12	M4 × 0.7	1.4	4 to 5.5
LCR-16	M5 × 0.8	2.9	5 to 6
LCR-20	M5 × 0.8	2.9	5 to 6
LCR-25	M6 × 1.0	4.8	6 to 7

Descriptions	End plate		
	Applicable bolts	Tightening torque (N·m)	Insertion length L (mm)
LCR-6	M3 × 0.5	0.6	4.5 to 6
LCR-8	M3 × 0.5	0.6	4.5 to 7
LCR-12	M4 × 0.7	1.4	6 to 9
LCR-16	M5 × 0.8	2.9	7.5 to 9
LCR-20	M5 × 0.8	2.9	7.5 to 11
LCR-25	M6 × 1.0	4.8	9 to 11

■ Observe the following tightening torque of bolts and nuts of the stopper.
[Fig. A]

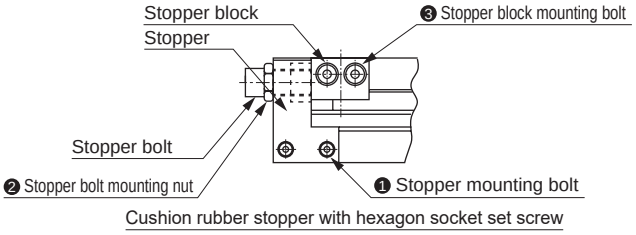

Model No.	❶ Stopper mounting bolt (N·m)	❷ Stopper bolt mounting nut (N·m)	❸ Stopper block mounting bolt (N·m)
LCR-6	0.4 to 0.5	1.2 to 2.0	0.6 to 0.8
LCR-8	0.4 to 0.5	1.2 to 2.0	0.6 to 0.8
LCR-12	0.6 to 0.8	1.2 to 2.0	0.6 to 0.8
LCR-16	0.6 to 0.8	3.0 to 4.0	1.4 to 1.8
LCR-20	2.9 to 3.5	4.5 to 6.0	1.4 to 1.8
LCR-25	2.9 to 3.5	4.5 to 6.0	2.9 to 3.5

■ When you attach/detach a workpiece onto the slide table or the end plate, be sure to support the slide table itself.

■ The cylinder switch may malfunction if there is a magnetic substance such as a metal plate installed adjacently. To ensure safe operation, keep it 10 mm and over away from the cylinder surface or change the installation surface of the cylinder switch. (Common for all port sizes)

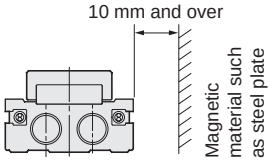

■ The cylinder switches may accidentally function if the cylinders are close to each other. Keep the distance below between the surfaces of the cylinders. (Common for all port sizes)

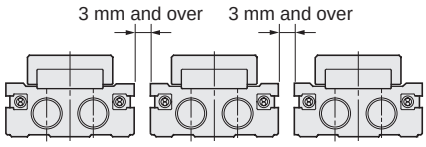

■ When using a positioning hole, use a pin of the dimensions which does not require press fitting. If a pin is press fitted, the stress of press fitting may damage or distort the linear guide, lowering the accuracy.
The recommended tolerance of a pin is JIS tolerance m6 or less.

MEMO

LCG

Linear slide cylinder

Combined functions

ø6/ø8/ø12/ø16/ø20/ø25

CONTENTS

Product introduction 144

● **Double acting/clean room specifications (LCG-P7*) 146**

Selection guide 162

Technical data 166

⚠ Safety precautions 170

Higher precision, higher rigidity, easier to use.

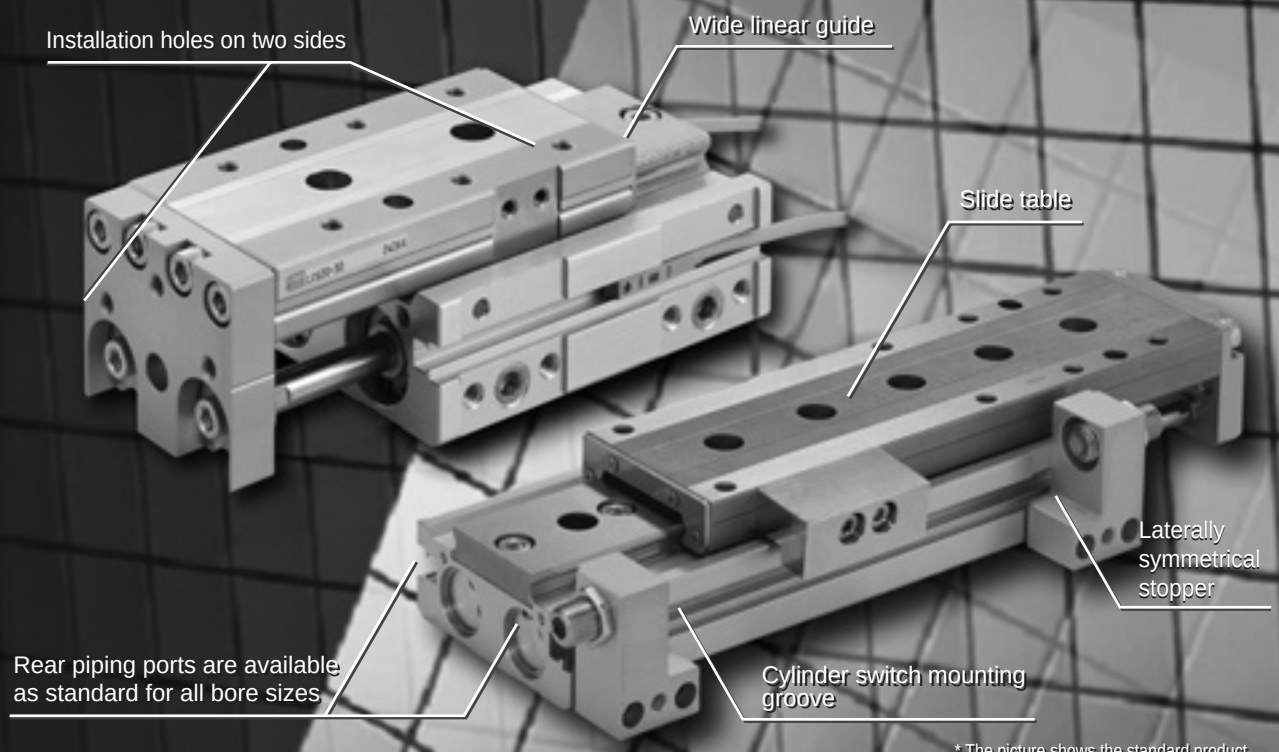

* The picture shows the standard product.

Higher precision

The linear guide table surface serves as a slide table, and thus provides higher precision than conventional models.
Parallelism of 0.03 mm (ø12 with 30 mm stroke length)
End plate squareness of 0.05 mm

Easy to use, too

No more complicated work for designing the cylinder and linear slide system individually. Work hours for designing have been reduced. Designing is more flexible and usability is more enhanced with laterally symmetrical installation of stoppers and multi-side piping.

Higher rigidity

A stainless steel or steel slide table has been adopted instead of the conventional aluminum slide table. It increases rigidity when combined with a wide guide.

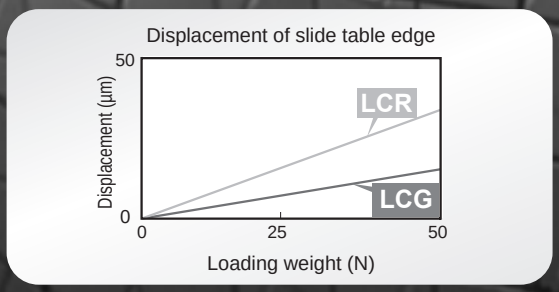

Applications

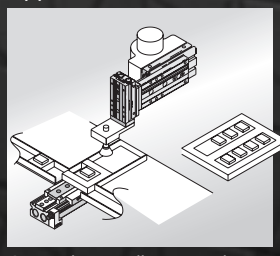

Conveying small parts to the tray for storage and from the tray for supply

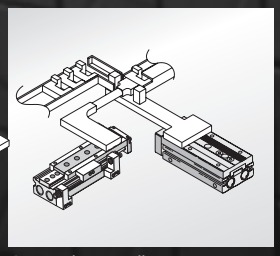

Conveying small parts

LCG Series

Linear slide cylinder

A high-precision, high-rigidity wide guide is attached to the air cylinder.
The linear guide table surface serves as a slide table.
Greater usability with unprecedented precision and rigidity.
Linear slide cylinder LCG Series (ø6/ø8/ø12/ø16/ø20/ø25)

Increased flexibility in design

Designing is more flexible with the laterally symmetrical stoppers, multi-side piping, two-side installation and positioning hole availability.

■ Modification to the laterally symmetrical configuration is possible.

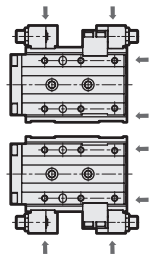

Change to laterally symmetrical configuration is possible ⬅ shows the piping direction.

Guide balls aligned in four rows on the linear guide (ø12 and over)

Guide balls aligned in four rows ensure the stable operation in all load directions.
The contact area of the guide balls is smaller than that in the two-row configuration with minimum friction resistance and enables smooth precision operation with a rigid body.

■ Aligned in four rows contacting at two points

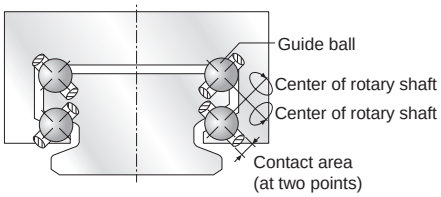

RoHS Directive compliant

Free from environmentally harmful substances such as lead and hexavalent chromium.

A wide variety of options and variations

The standard, position locking and clean room specifications are available.
The options include a stroke adjusting stopper, shock absorber stopper and more.
* A shock absorber stopper cannot be used with the clean specifications.

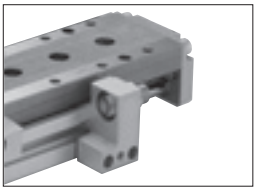

■ Stroke adjusting stopper
Adjusting range on one side: 0 to 5 mm

Anti-rust (ø20, ø25)

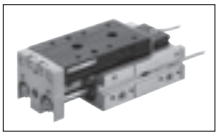

The table and rail surfaces are anti-rust treated to withstand high humidity in ambient environment, for example near an ionizer.

2-color display switch is available

The proximity 2-color display switch can be mounted.
It does not protrude from the body and thus contributes to the plain and simple appearance of the cylinder.

■ LCG Series variation

Model variations	Bore size	Stroke (mm)								
		10	20	30	40	50	75	100	125	150
Double acting/single rod (Clean room specifications) **LCG-P7***	ø6	●	●	●	●	●				
	ø8	●	●	●	●	●	●			
	ø12	●	●	●	●	●	●	●		
	ø16	●	●	●	●	●	●	●	●	
	ø20/ø25	●	●	●	●	●	●	●	●	●

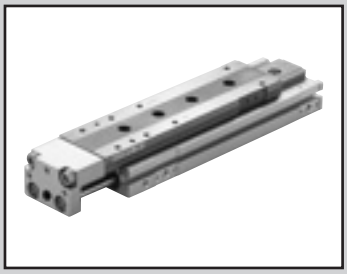

Linear slide cylinder Double acting/single rod Clean room specifications

LCG Series

● Bore size: ø6/ø8/ø12/ø16/ø20/ø25

JIS symbol 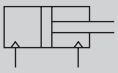

RoHS CAD

Structure and material restriction

	Structure	Model No.
P7 Series	Exhaust treatment	P72
	Vacuum treatment	P73

Specifications

Descriptions		LCG-P7*					
Bore size mm		ø6	ø8	ø12	ø16	ø20	ø25
Actuation		Double acting					
Working fluid		Compressed air					
Max. working pressure MPa		0.7					
Min. working pressure MPa		0.15 (*2)					
Proof pressure MPa		1.05					
Ambient temperature °C		-10 to 60 (no freezing)					
Port size	Main body side	M3	M5			Rc1/8	
	Main body rear	M3				M5	Rc1/8
Port size (relief port)		M3	M5			Rc1/8	
Stroke tolerance mm		$^{+2.0}_{0}$ (*1)					
Working piston speed mm/s		50 to 500 (*3)					
Cushion		With rubber cushion					
Lubrication		Not available					
Allowable energy absorption J		Refer to table 3 on page 162.					

*1: Note that there will be a slight gap between the end plate and floating bush if no stopper is attached.
*2: The stroke adjusting stopper for 0.3 MPa and over working pressure is the metal sealing.
*3: Keep within 50 to 200 mm/s when using a stroke adjusting stopper.

Stroke length

Bore size (mm)	Standard stroke length (mm)
ø6	10, 20, 30, 40, 50
ø8	10, 20, 30, 40, 50, 75
ø12	10, 20, 30, 40, 50, 75, 100
ø16	10, 20, 30, 40, 50, 75, 100, 125
ø20	10, 20, 30, 40, 50, 75, 100, 125, 150
ø25	10, 20, 30, 40, 50, 75, 100, 125, 150

Note: The stroke length other than above is not available.

Theoretical thrust table

Refer to page 163.

Switch specifications

● 1-color/2-color display

Descriptions	Reed 2-wire				Proximity 2-wire		Proximity 3-wire		
	T0H/T0V		T5H/T5V		T2H/T2V	T2WH/T2WV	T3H/T3V	T3PH/T3PV	T3WH/T3WV
Applications	Programmable controller, relay		Programmable controller, relay IC circuit (without indicator lamp), serial connection		Programmable controller		Programmable controller, relay		
Output method	-		-		-		NPN output	PNP output	NPN output
Power supply voltage	-		-		-		10 to 28 VDC		
Load voltage	12/24 VDC	110 VAC	5/12/24 VDC	110 VAC	10 to 30 VDC	24 VDC ±10%	30 VDC or less		
Load current	5 to 50 mA	7 to 20 mA	50 mA or less	20 mA or less	5 to 20 mA (*2)		100 mA or less		50 mA or less
Indicator lamp	LED (Lit when ON)		Without indicator lamp		LED (Lit when ON)	Red/green LED (Lit when ON)	LED (Lit when ON)	Yellow LED (Lit when ON)	Red/green LED (Lit when ON)
Leakage current	0 mA				1 mA or less		10 μA or less		
Weight g	1 m: 18 3 m: 49 5 m: 80								

Descriptions	Proximity 2-wire	Proximity 3-wire	Proximity 2-wire		Proximity 3-wire		
	F2S	F3S	F2H/F2V	F2YH/F2YV	F3H/F3V	F3PH/F3PV (custom order)	F3YH/F3YV
Applications	Programmable controller	Programmable controller, relay	Programmable controller		Programmable controller, relay		
Output method	-	NPN output	-		NPN output	PNP output	NPN output
Power supply voltage	-	10 to 28 VDC	-		10 to 28 VDC	4.5 to 28 VDC	10 to 28 VDC
Load voltage	10 to 30 VDC	30 VDC or less	10 to 30 VDC	24 VDC ±10%	30 VDC or less		
Load current	5 to 20 mA	50 mA or less	5 to 20 mA (*2)		100 mA or less	50 mA or less	
Indicator lamp	Red LED (Lit when ON)		LED (Lit when ON)	Red/green LED (Lit when ON)	LED (Lit when ON)	Yellow LED (Lit when ON)	Red/green LED (Lit when ON)
Leakage current	1 mA or less	10 μA or less	1 mA or less		10 μA or less		
Weight g	1 m: 10 3 m: 29						

*1: Refer to page 309 for detailed switch specifications and Dimensions.
*2: Max. load current: 20mA at 25°C.The current is lower than 25 mA if the operating ambient temperature around the switch is higher than 20˚C. (60 to 5 mA at 10°C.)
*3: The F type switch uses a bend-resistant lead wire.

Cylinder weight

● Clean room specifications (Unit: g)

Bore size (mm)	Basic Stroke length (mm)								
	10	20	30	40	50	75	100	125	150
ø6	170	170	190	250	270	-	-	-	-
ø8	270	270	300	380	410	500	-	-	-
ø12	550	550	550	600	650	840	980	-	-
ø16	890	880	870	950	1,030	1,380	1,570	1,770	-
ø20	1,470	1,460	1,450	1,570	1,690	2,130	2,420	2,710	3,000
ø25	2,410	2,390	2,370	2,550	2,730	3,530	3,950	4,370	4,790

● Weight of variation/option (stopper) (Unit: g)

Bore size (mm)	Option/stopper code	
	S1 to S4	S5/S6
ø6	30	40
ø8	40	60
ø12	70	100
ø16	110	150
ø20	170	250
ø25	290	380

How to order (ø6 to ø16)

Without switch (Magnet for switch incorporated)

LCG - 8 - 40 ——— S5 P72

With switch (Magnet for switch incorporated)

LCG - 12 - 40 - F2H* - R - S1DT P72

- LCG: Model No.
- 12: Ⓐ Bore size
- 40: Ⓑ Stroke length
- F2H*: Ⓒ Switch model No. *6
- R: Ⓓ Switch quantity
- S1DT: Ⓔ Option
- P72: Ⓕ Clean room specifications

⚠ Precautions for model No. selection

*1: For the port position, refer to the stopper dimensions on page 161.
*2: The port positions of the standard without stopper are (1) and (3) in the figure below.
*3: Can be selected for the type with stopper only.
*4: When two switches are necessary in the type with S*** of ø6 to ø8 with 30 mm stroke length or less, select the F*H switch.
*5: The anti-rust is custom order.
*6: The stroke adjusting stopper for 0.3 MPa and over working pressure is the metal sealing.
*7: When changing the stopper position from the head side to the rod side, another discrete stopper may be required to be purchased depending on the stroke length or the stroke adjustment amount.
For details, please consult our sales staff.
For some stroke lengths, the adjustment amount of 15 mm or 25 mm is not allowed.

[Example of model No.]

LCG-12-40-F2H-R-S1DTP72

Model: Linear slide cylinder Double acting/single rod (clean room specifications) LCG-P7*

Ⓐ Bore size : ø12
Ⓑ Stroke length : 40 mm
Ⓒ Switch model No. : Proximity/2 wires/Lead wire 1 m
Lead wire straight
Ⓓ Switch quantity : 1 (on rod end)
Ⓔ Other options : Stroke adjusting stopper
Stopper position (1)
With side and bottom ports
Material, steel (nitriding)
Ⓕ Clean room specifications : Exhaust treatment

● Stopper position

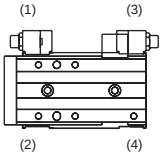

Code	Content
Ⓐ Bore size	
6	ø6
8	ø8
12	ø12
16	ø16

Ⓑ Stroke length (mm)

		Bore size (ø)			
		6	8	12	16
10	10	●	●	●	●
20	20	●	●	●	●
30	30	●	●	●	●
40	40	●	●	●	●
50	50	●	●	●	●
75	75		●	●	●
100	100			●	●
125	125				●
150	150				

Ⓒ Switch model No.

Lead wire straight	Lead wire L-shaped	Contact	Voltage AC	Voltage DC	Display	Lead wire	Bore size ø6	ø8	ø12	ø16
F2S*		Proximity		●	1-color display	2 wires	●	●	●	
F3S*		Proximity		●	1-color display	3 wires	●	●	●	
F2H*	F2V*	Proximity		●	1-color display	2 wires	●	●	●	
F3H*	F3V*	Proximity		●	1-color display	3 wires	●	●	●	
F3PH*	F3PV*	Proximity		●	1-color display (custom order)	3 wires	●	●	●	
F2YH*	F2YV*	Proximity		●	2-color display	2 wires	●	●	●	
F3YH*	F3YV*	Proximity		●	2-color display	3 wires	●	●	●	
T0H*	T0V*	Reed	●	●	1-color display	2 wires				
T5H*	T5V*	Reed	●	●	Without indicator lamp	2 wires				
T2H*	T2V*	Proximity		●	1-color display	2 wires				
T3H*	T3V*	Proximity		●	1-color display	3 wires				
T3PH*	T3PV*	Proximity		●	1-color display (PNP output)	3 wires				●
T2WH*	T2WV*	Proximity		●	2-color display	2 wires				
T3WH*	T3WV*	Proximity		●	2-color display	3 wires				

Lead wire length

Blank	1 m (standard)		●		
3	3 m (option)		●		
5	5 m (option)				●

Ⓓ Switch quantity

R	1 (on rod end)	●
H	1 (on head end)	●
D	2	●

Ⓔ Option

Blank	No option		●
S Stroke adjusting stopper 5 mm stroke adjustment on one side			*4
S1**	Stopper position (1) (can be changed to (4))	Stopper mounting position	●
S2**	Stopper position (2) (can be changed to (3))	Stopper mounting position	●
S3**	Stopper position (3) (can be changed to (2))	Stopper mounting position	●
S4**	Stopper position (4) (can be changed to (1))	Stopper mounting position	●
S5**	Stopper position (1), (3)	Stopper mounting position	●
S6**	Stopper position (2), (4)	Stopper mounting position	●
**** Part**			
Blank	Port on the stopper: No port		●
D	Port on the stopper: Side and bottom ports		● *1, *3
Blank	Stopper block material: Steel		●
T	Stopper block material: Steel (nitriding)		● *3
Plug attached			
Blank	None		
N	With side piping port plug (not available for ø6)		

Ⓕ Clean room specifications

	Structure
P72	Exhaust treatment
P73	Vacuum treatment

How to order (ø20 and ø25)

Without switch (Magnet for switch incorporated)

LCG - 20 - 40 ——— S5 U P72

With switch (Magnet for switch incorporated)

LCG - 20 - 40 - T2H* - R - S1DT U P72

- LCG: Model No.
- 20: Ⓐ Bore size
- 40: Ⓑ Stroke length
- T2H*: Ⓒ Switch model No. *4
- R: Ⓓ Switch quantity
- S1DT: Ⓔ Option
- U: Ⓕ Anti-rust treatment
- P72: Ⓖ Clean room specifications

Code	Content
Ⓐ Bore size	
20	ø20
25	ø25
Ⓑ Stroke length (mm)	
10	10
20	20
30	30
40	40
50	50
75	75
100	100
125	125
150	150

Ⓒ Switch model No.

Lead wire straight	Lead wire L-shaped	Contact	Voltage AC	Voltage DC	Display	Lead wire
T0H*	T0V*	Reed	●	●	1-color display	2 wires
T5H*	T5V*	Reed	●	●	Without indicator lamp	2 wires
T2H*	T2V*	Proximity		●	1-color display	2 wires
T3H*	T3V*	Proximity		●	1-color display	3 wires
T3PH*	T3PV*	Proximity		●	1-color display (PNP output) (custom order)	3 wires
T2WH*	T2WV*	Proximity		●	2-color display	2 wires
T3WH*	T3WV*	Proximity		●	2-color display	3 wires

Lead wire length	
Blank	1 m (standard)
3	3 m (option)
5	5 m (option)

Ⓓ Switch quantity	
R	1 (on rod end)
H	1 (on head end)
D	2

Ⓔ Option		
Blank	No option	
S Stroke adjusting stopper 5 mm stroke adjustment on one side		
S1**	Stopper position (1) (can be changed to (4))	Stopper mounting position
S2**	Stopper position (2) (can be changed to (3))	Stopper mounting position
S3**	Stopper position (3) (can be changed to (2))	Stopper mounting position
S4**	Stopper position (4) (can be changed to (1))	Stopper mounting position
S5**	Stopper position (1), (3)	Stopper mounting position
S6**	Stopper position (2), (4)	Stopper mounting position
**** Part**		
Blank	Port on the stopper: No port	
D	Port on the stopper: Side and bottom ports	*1, *3
Blank	Stopper block material: Steel	
T	Stopper block material: Steel (nitriding)	*3

Ⓕ Anti-rust treatment		
Blank	None	
U	Anti-rust treatment (guide only)	*4
Plug attached		
Blank	None	
N	With side piping port plug	

Ⓖ Clean room specifications	
	Structure
P72	Exhaust treatment
P73	Vacuum treatment

⚠ Precautions for model No. selection

*1: For the port position, refer to the stopper dimensions on page 181.
*2: The port positions of the standard without stopper are (1) and (3).
*3: Can be selected for the type with stopper only.
*4: The table is alloy steel.
To prevent rust, select "U" for an environment where the temperature and humidity is high or condensation may occur on the product surface.
*5: The stroke adjusting stopper for 0.3 MPa and over working pressure is the metal sealing.
*6: When changing the stopper position from the head side to the rod side, another discrete stopper may be required to be purchased depending on the stroke length or the stroke adjustment amount.
For details, please consult our sales staff.
For some stroke lengths, the adjustment amount of 15 mm or 25 mm is not allowed.

[Example of model No.]

LCG-20-40-T2H-R-S1DTP72

Model No.: Linear slide cylinder Double acting/single rod (clean room specifications) LCG-P7*

Ⓐ Bore size : ø20
Ⓑ Stroke length : 40 mm
Ⓒ Switch model No. : Proximity/2 wires/Lead wire 1 m
Lead wire straight
Ⓓ Switch quantity : 1 (on rod end)
Ⓔ Other options : Stroke adjusting stopper
Stopper position (1)
With side and bottom ports
Material, steel (nitriding)
Ⓖ Clean room specifications : Exhaust treatment

● Stopper position

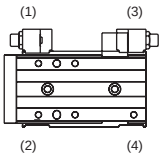

U: Anti-rust treatment (ø20, ø25)

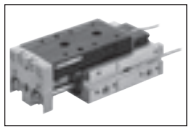

The table and rail surface rustproofing reduces rust in high-humidity environments and near ionizers.

The table and rail are black.

Dimensions (bore size: ø6)

● LCG-6-P7*

Stroke length: 10, 20, 30
(Mounting holes in the figure indicate when stroke length is 20)

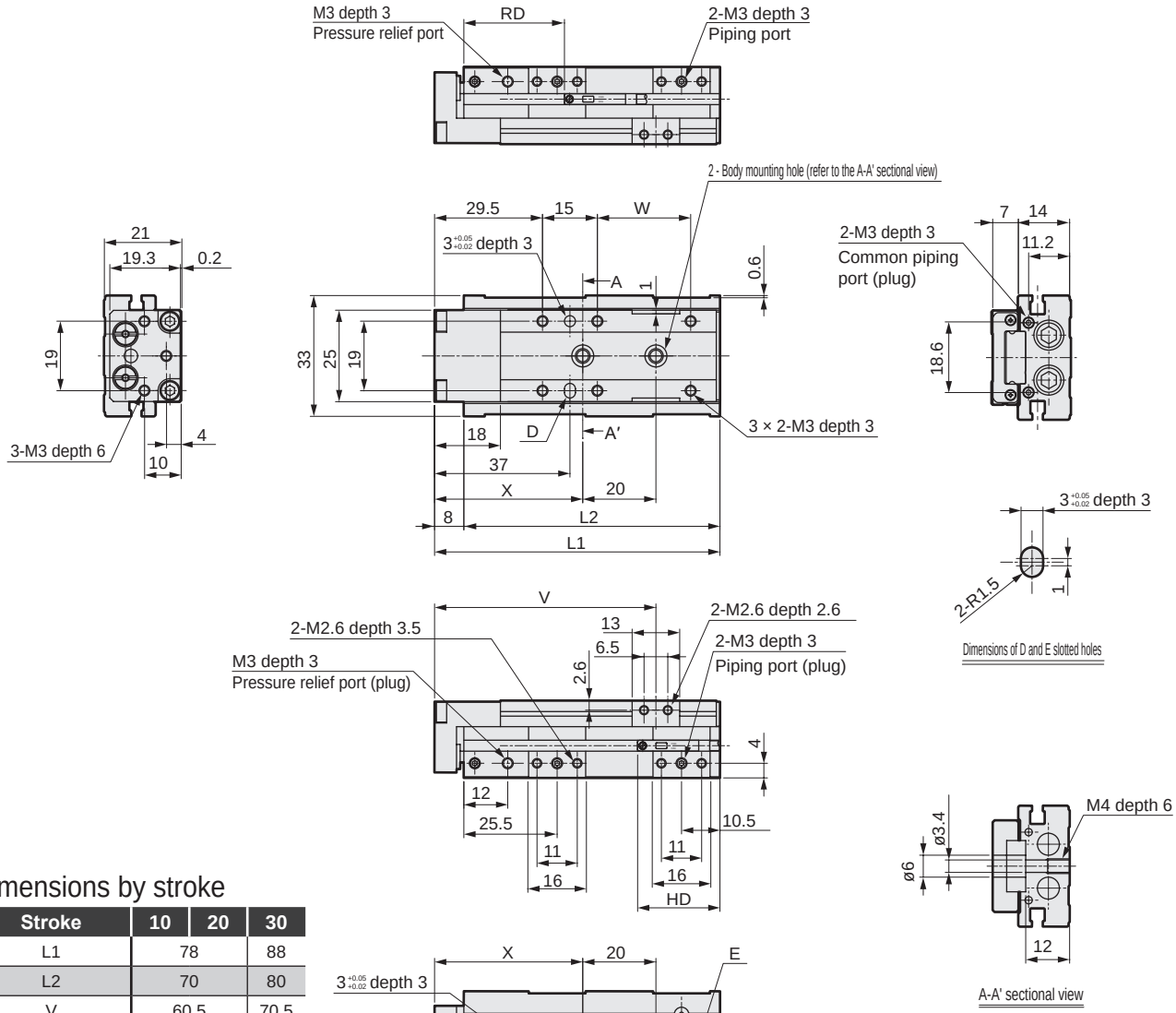

Dimensions by stroke

Stroke	10	20	30
L1	78		88
L2	70		80
V	60.5		70.5
W	25.5		35.5
X	40.5		38
Y	45.5		43
RD	27.5		
HD	32.5	22.5	

● Dimensions of projecting section when F2S or F3S cylinder switch is mounted

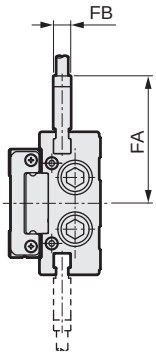

Stroke length	10	20	30
FA	29.6		
FB	4		
RD	26.5		
HD	33.5	23.5	

Note 1: When using a positioning hole, use a pin of the dimensions that do not require press fitting.
The recommended tolerance of a pin is JIS tolerance m6 or less.

Note 2: When installing rear side piping, check the safety precautions described in 1. Common; piping on page 170.

Dimensions (bore size: ø6)

● LCG-6-P7*

Stroke length: 40, 50

(Mounting holes in the figure indicate when stroke length is 50)

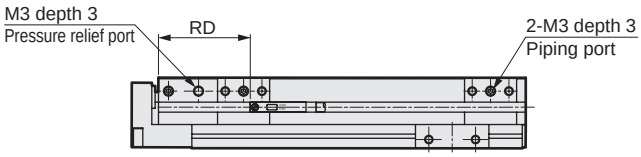

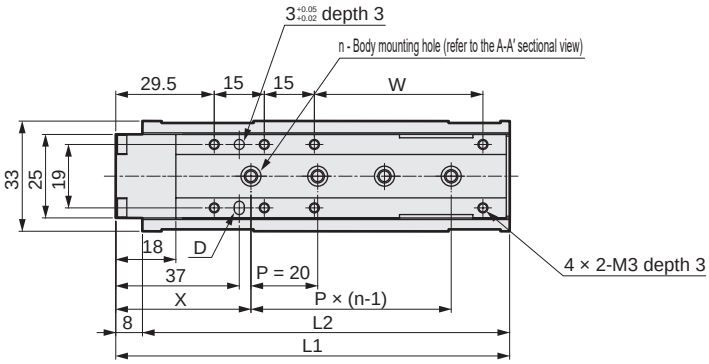

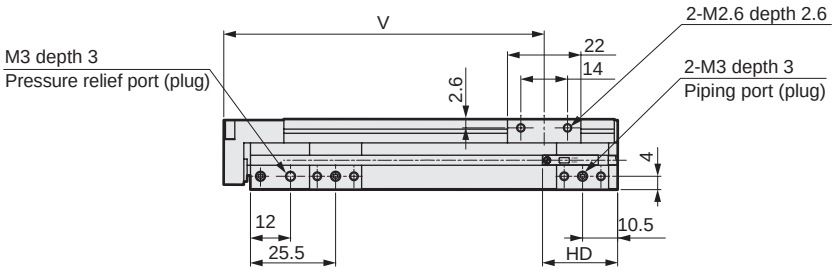

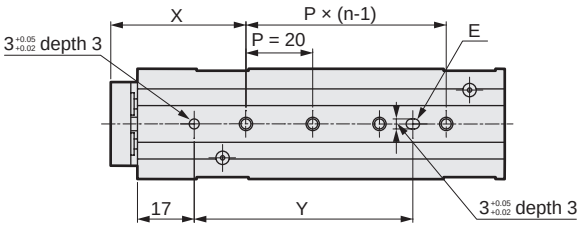

Dimensions by stroke length

Stroke length	40	50
L1	108	118
L2	100	110
n	3	4
V	86	96
W	40.5	50.5
X	39	40.5
Y	44	65.5
RD	37.5	
HD	22.5	

● Dimensions of projecting section when F2S or F3S cylinder switch is mounted

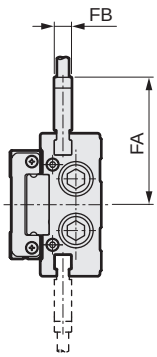

Stroke length	40	50
FA	29.6	
FB	4	
RD	36.5	
HD	23.5	

Note 1: When using a positioning hole, use a pin of the dimensions that do not require press fitting.
The recommended tolerance of a pin is JIS tolerance m6 or less.

Note 2: When installing rear side piping, check the safety precautions described in 1. Common; piping on page 170.

SCPD3
SCM
SSD2
MDC2
SMG
LCM
LCR
LCG
LCX
STM
STG
STR2
MRL2
GRC
Cylinder switch
MN3E MN4E
4GA/B
M4GA/B
MN4GA/B
F.R (module unit)
Clean F.R
Precision R
Press gauge Diff. press gauge
Electro-pneumatic R
Speed controller
Auxiliary valve
Fitting/ tube
Clean air unit
Pressure sensor
Flow rate sensor
Valve for air blow
Ending

Dimensions (bore size: ø8)

CAD

● LCG-8-P7*

Stroke length: 10, 20, 30

(Mounting holes in the figure indicate when stroke length is 30)

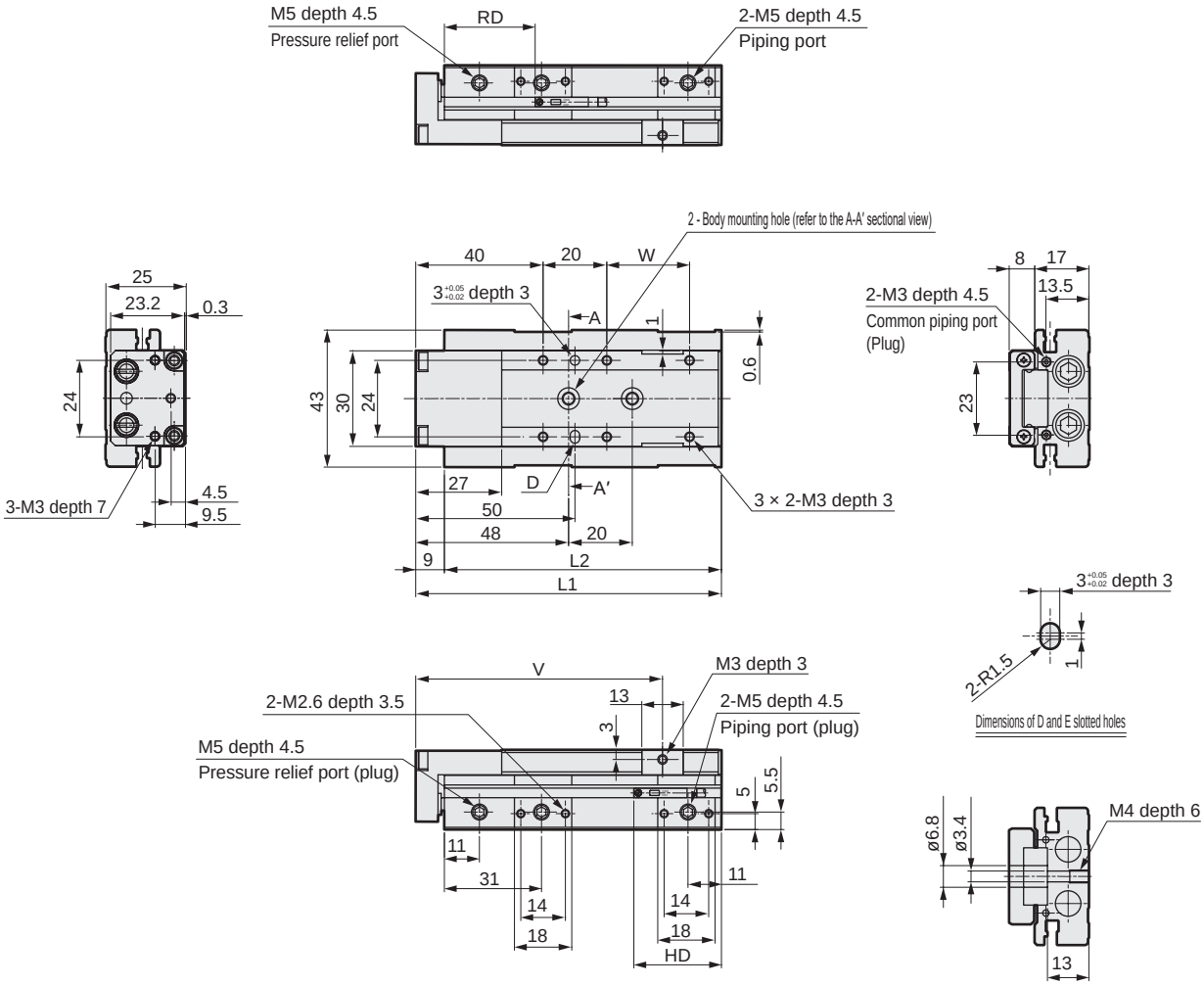

Dimensions by stroke length

Stroke length	10	20	30
L1	86		96
L2	77		87
V	67.5		77.5
W	16		26
RD	33		
HD	34	24	

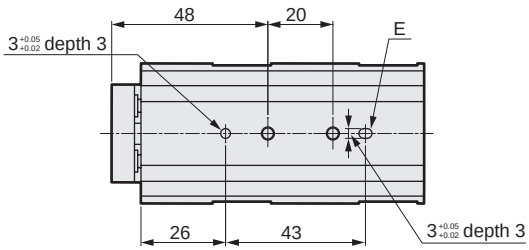

● Dimensions of projecting section when F2S or F3S cylinder switch is mounted

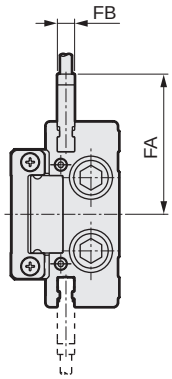

Stroke length	10	20	30
FA	32.6		
FB	4		
RD	32		
HD	35	25	

Note 1: When using a positioning hole, use a pin of the dimensions that do not require press fitting.
The recommended tolerance of a pin is JIS tolerance m6 or less.

Note 2: When installing rear side piping, check the safety precautions described in 1. Common; piping on page 170.

Dimensions (bore size: ø8)

● LCG-8-P7*

Stroke length: 40, 50, 75
(Mounting holes in the figure indicate when stroke length is 50)

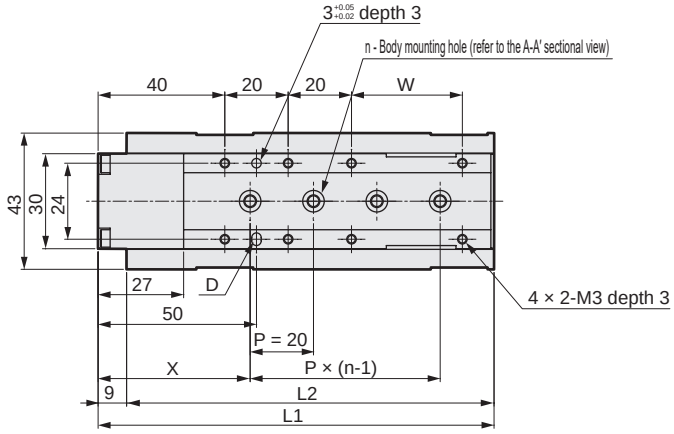

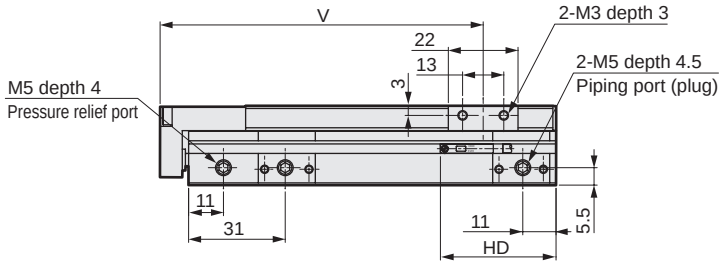

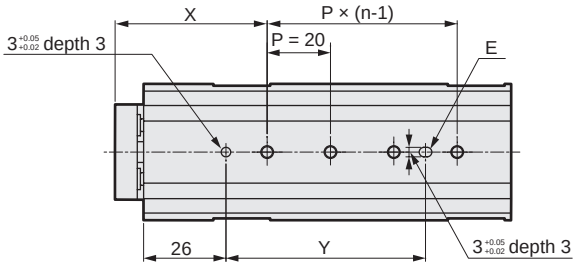

Dimensions by stroke length

Stroke length	40	50	75
L1	115	125	150
L2	106	116	141
n	3	4	5
V	92	102	127
W	25	35	60
X	46.5	48	45
Y	41.5	63	80
RD	34		
HD	32		

● Dimensions of projecting section when F2S or F3S cylinder switch is mounted

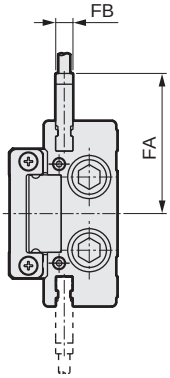

Stroke length	40	50	75
FA	32.6		
FB	4		
RD	33		
HD	33		

Note 1: When using a positioning hole, use a pin of the dimensions that do not require press fitting.
The recommended tolerance of a pin is JIS tolerance m6 or less.

Note 2: When installing rear side piping, check the safety precautions described in 1. Common; piping on page 170.

Dimensions (bore size: ø12)

● LCG-12-P7*

Stroke length: 10, 20, 30, 40, 50
(Mounting holes in the figure indicate when stroke length is 30)

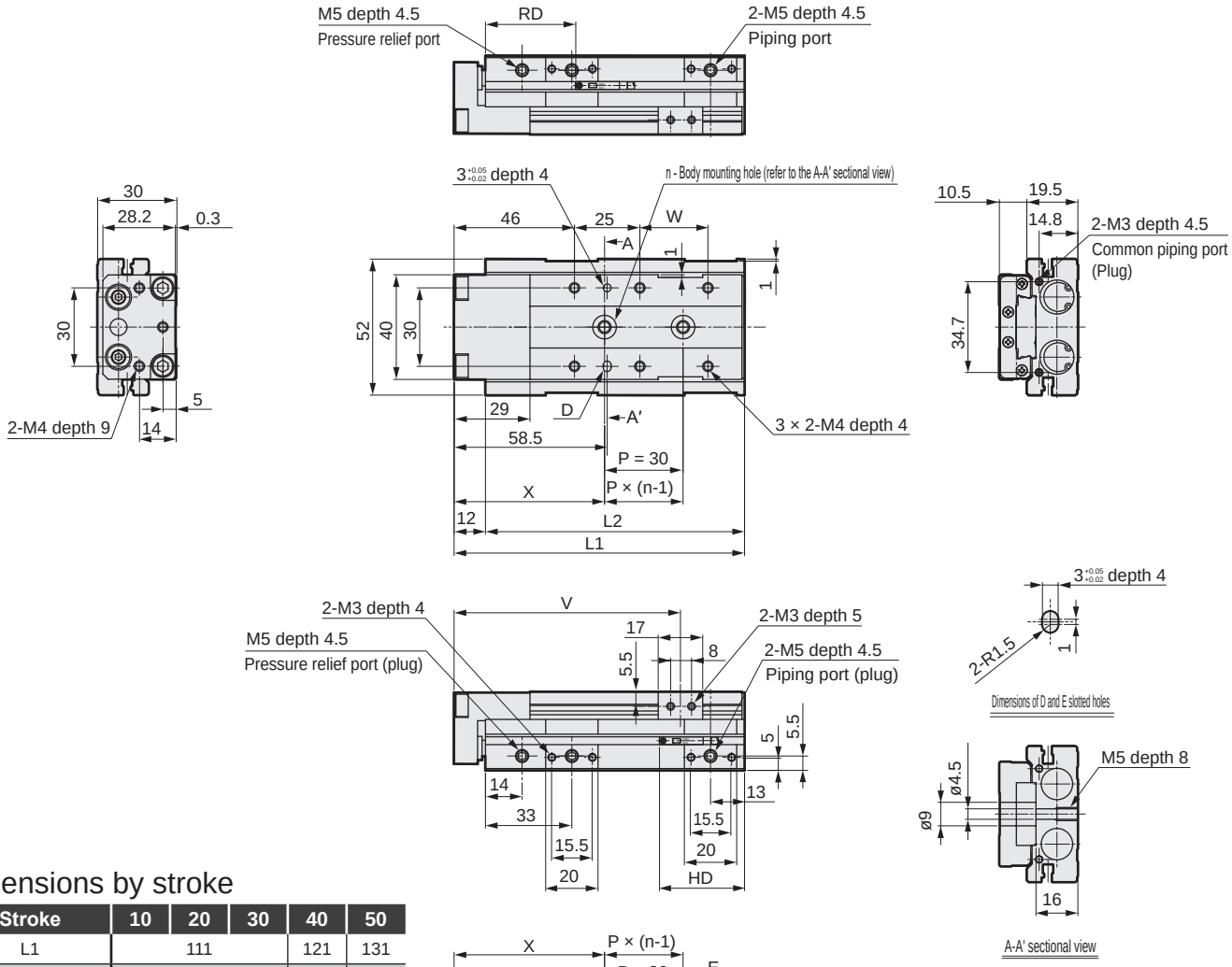

Dimensions by stroke

Stroke	10	20	30	40	50
L1	111			121	131
L2	99			109	119
n	2			3	
V	86.5			96.5	106.5
W	26			36	46
X	57.5			56	52
Y	32.5			31	57
RD	41.5				
HD	47	37	27		

● Dimensions of projecting section when F2S or F3S cylinder switch is mounted

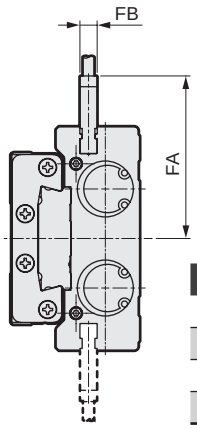

Stroke length	10	20	30	40	50
FA	37.8				
FB	4				
RD	40.5				
HD	48	38	28		

Note 1: When using a positioning hole, use a pin of the dimensions that do not require press fitting.
The recommended tolerance of a pin is JIS tolerance m6 or less.

Note 2: When installing rear side piping, check the safety precautions described in 1. Common; piping on page 170.

Dimensions (bore size: ø12)

● LCG-12-P7*

Stroke length: 75, 100
(Mounting holes in the figure indicate when stroke length is 100)

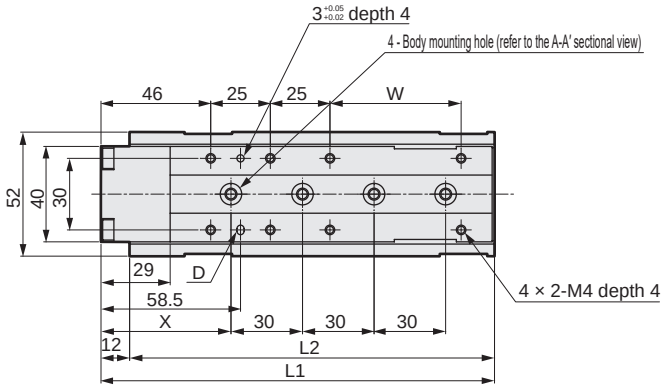

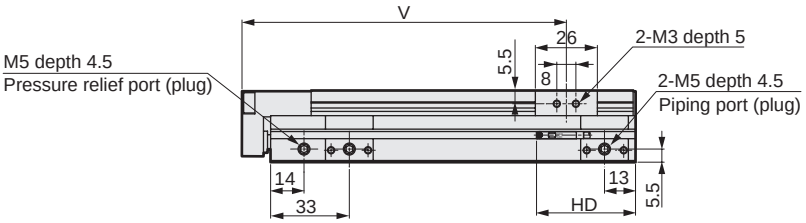

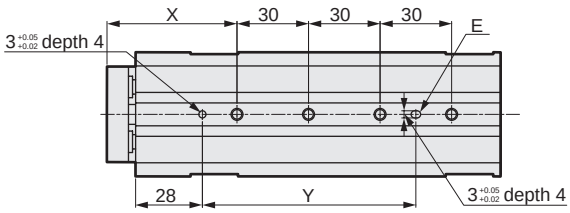

Dimensions by stroke length

Stroke length	75	100
L1	165	190
L2	153	178
V	136	161
W	55	80
X	54.5	67
Y	89.5	102
RD	41.5	
HD	36	

● Dimensions of projecting section when F2S or F3S cylinder switch is mounted

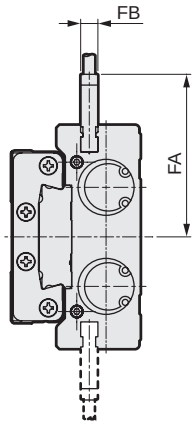

Stroke length	75	100
FA	37.8	
FB	4	
RD	40.5	
HD	37	

Note 1: When using a positioning hole, use a pin of the dimensions that do not require press fitting.
The recommended tolerance of a pin is JIS tolerance m6 or less.

Note 2: When installing rear side piping, check the safety precautions described in 1. Common; piping on page 170.

Dimensions (bore size: ø16)

● LCG-16-P7*

Stroke length: 10, 20, 30, 40, 50

(Mounting holes in the figure indicate when stroke length is 30)

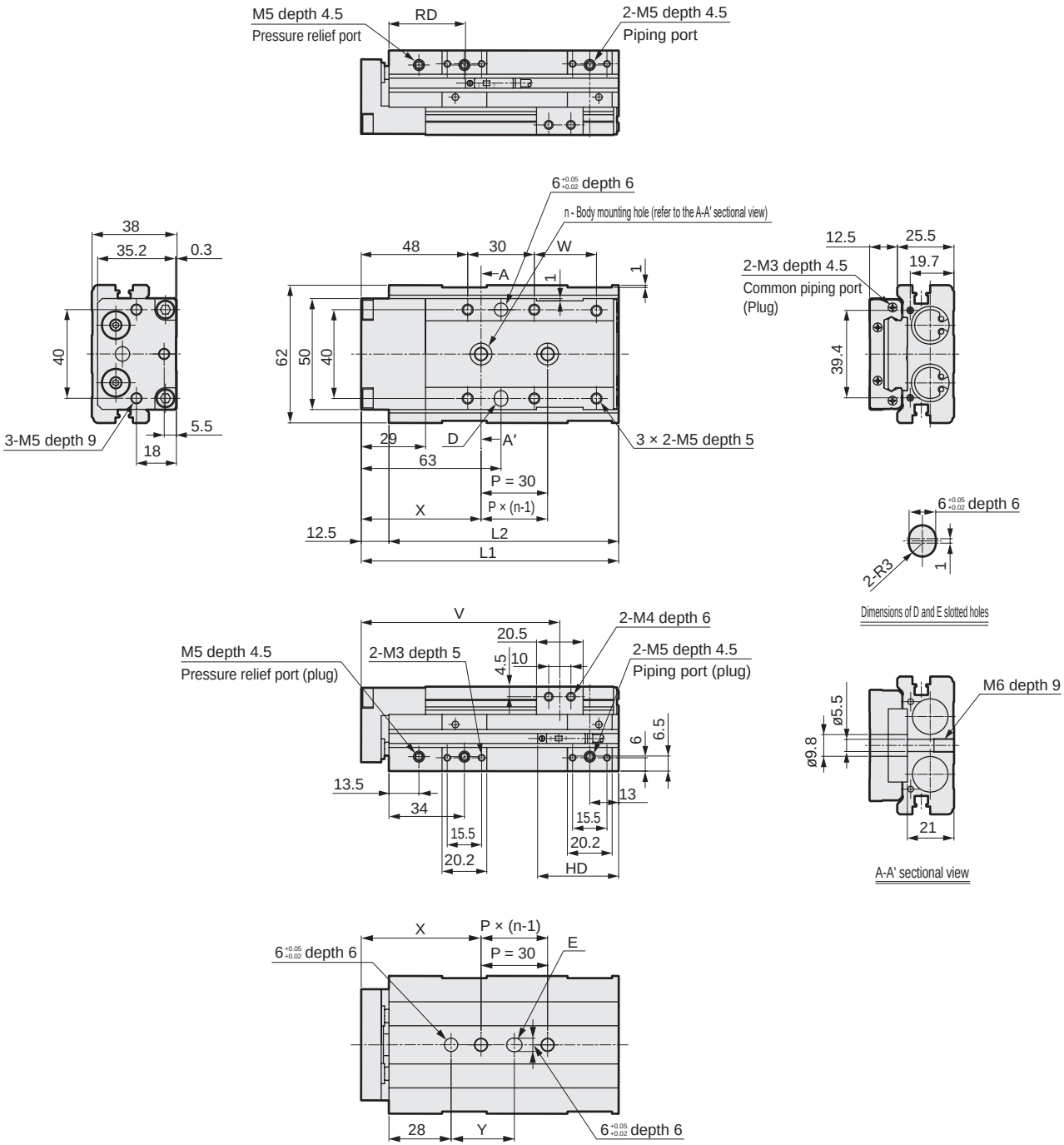

Dimensions by stroke length

Stroke length		10	20	30	40	50
L1		116			126	136
L2		103.5			113.5	123.5
n		2				3
V		89.8			99.8	109.8
W		28			38	48
X		54			65.5	55.5
Y		28.5			40	60
T0*/T5*	RD	37				
T2*/T3*	HD	56.5	46.5	36.5		
T2W*/T3W*	RD	39.5				
	HD	54	44	34		

Note 1: When using a positioning hole, use a pin of the dimensions that do not require press fitting.
The recommended tolerance of a pin is JIS tolerance m6 or less.

Note 2: When installing rear side piping, check the safety precautions described in 1. Common; piping on page 170.

Dimensions (bore size: ø16)

● LCG-16-P7*

Stroke length: 75, 100, 125
(Mounting holes in the figure indicate when stroke length is 75)

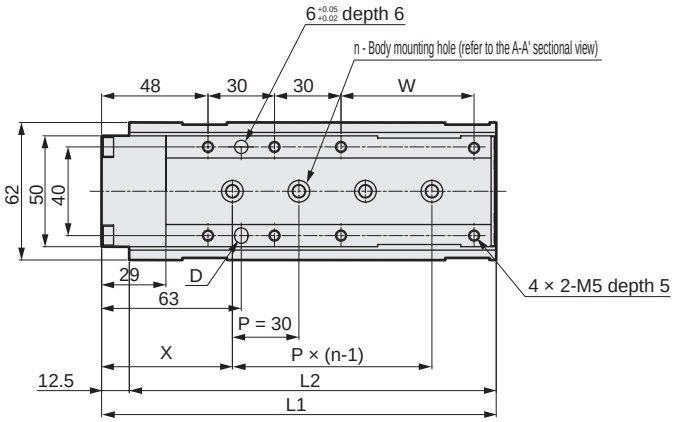

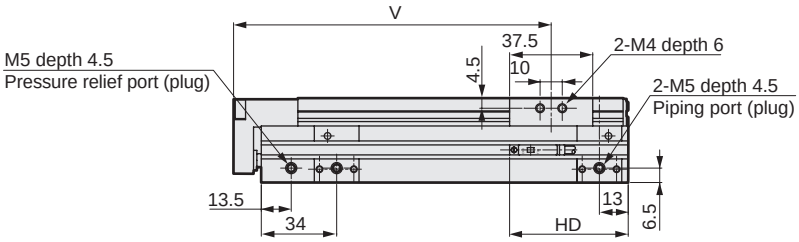

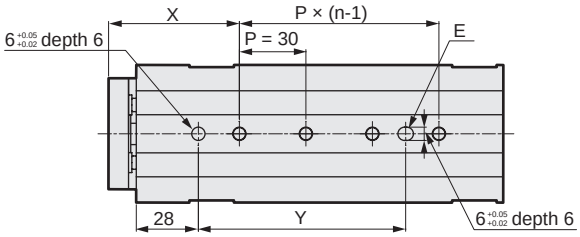

Dimensions by stroke length

Stroke length		75	100	125
L1		178	203	228
L2		165.5	190.5	215.5
n		4	5	
V		143.3	168.3	193.3
W		60	85	110
X		59	57	69
Y		93.5	121.5	133.5
T0*/T5*	RD	37		
T2*/T3*	HD	53.5		
T2W*/T3W*	RD	39.5		
	HD	51		

Note 1: When using a positioning hole, use a pin of the dimensions that do not require press fitting.
The recommended tolerance of a pin is JIS tolerance m6 or less.

Note 2: When installing rear side piping, check the safety precautions described in 1. Common; piping on page 170.

SCPD3
SCM
SSD2
MDC2
SMG
LCM
LCR
LCG
LCX
STM
STG
STR2
MRL2
GRC
Cylinder switch
MN3E MN4E
4GA/B
M4GA/B
MN4GA/B
F.R (module unit)
Clean F.R
Precision R
Press gauge Diff. press gauge
Electro-pneumatic R
Speed controller
Auxiliary valve
Fitting/ tube
Clean air unit
Pressure sensor
Flow rate sensor
Valve for air blow
Ending

Dimensions (bore size: ø20)

● LCG-20-P7*

Stroke length: 10, 20, 30, 40, 50
(Mounting holes in the figure indicate when stroke length is 30)

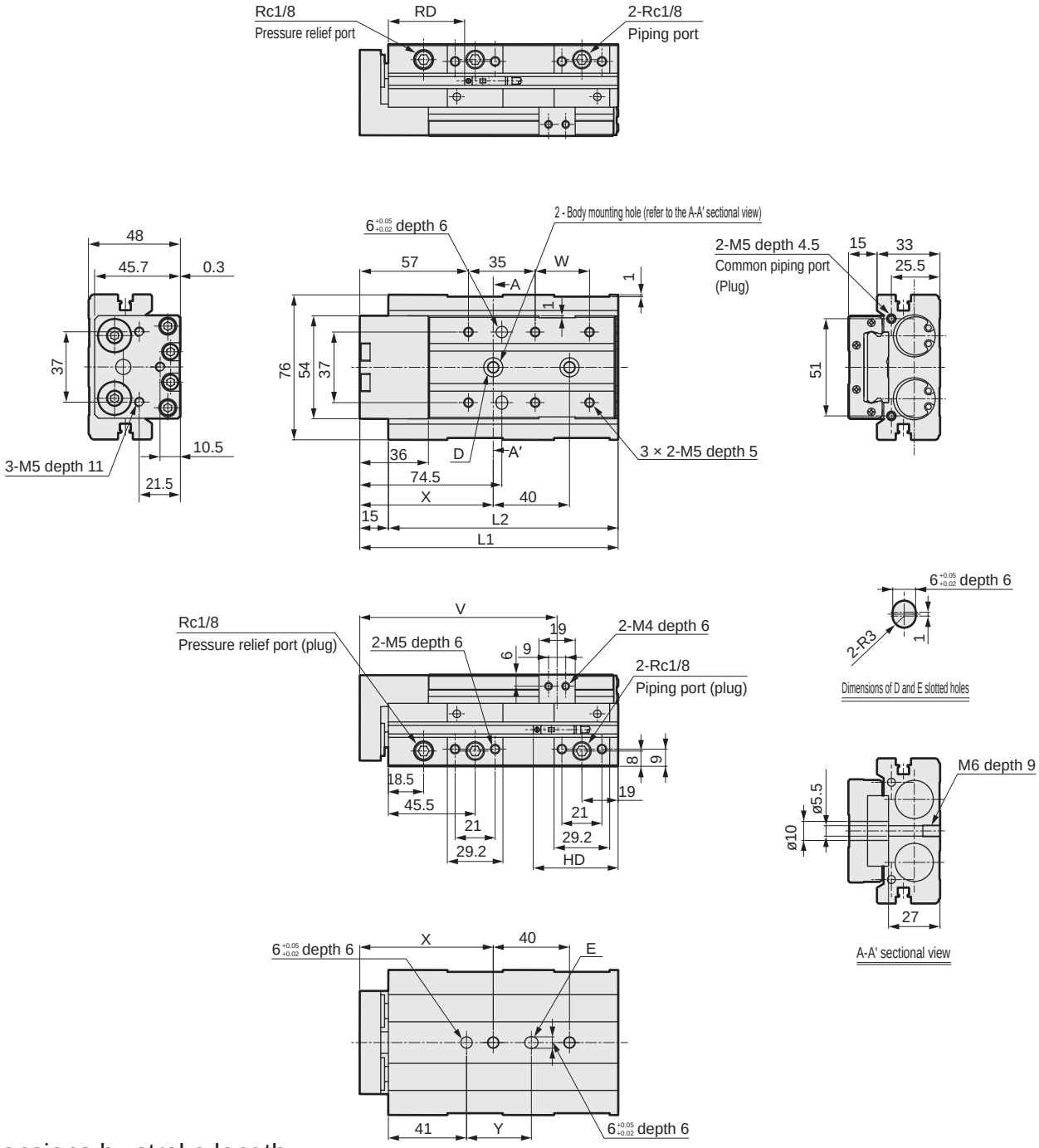

Dimensions by stroke length

Stroke length		10	20	30	40	50
L1		135.5			145.5	155.5
L2		120.5			130.5	140.5
V		103.5			113.5	123.5
W		28.5			38.5	48.5
X		70			76	74
Y		34			40	38
T0*/T5*	RD	41				
T2*/T3*	HD	69.5	59.5	49.5		
T2W*/T3W*	RD	43.5				
	HD	67	57	47		

* The same dimensions apply to the anti-rust (U).

Note 1: When using a positioning hole, use a pin of the dimensions that do not require press fitting.
The recommended tolerance of a pin is JIS tolerance m6 or less.

Note 2: When installing rear side piping, check the safety precautions described in 1. Common; piping on page 170.

Dimensions (bore size: ø20)

● LCG-20-P7*

Stroke length: 75, 100, 125, 150
(Mounting holes in the figure indicate when stroke length is 100)

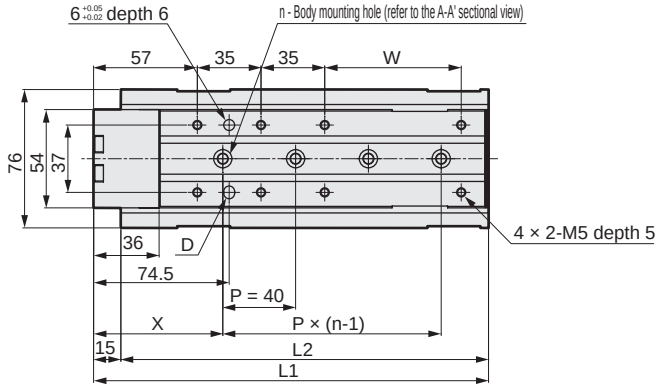

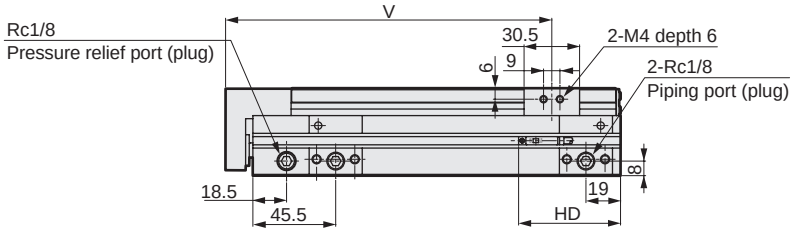

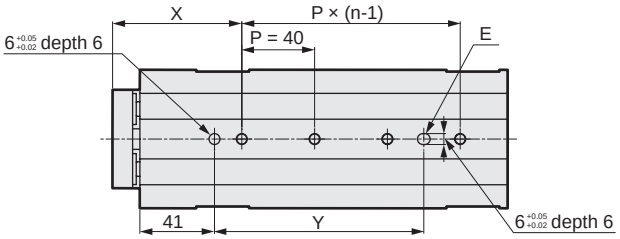

Dimensions by stroke length

Stroke length		75	100	125	150
L1		192	217	242	267
L2		177	202	227	252
n		3	4		5
V		154.3	179.3	204.3	229.3
W		50	75	100	125
X		71		78	76
Y		75	115	122	160
T0*/T5*	RD	41			
T2*/T3*	HD	61			
T2W*/T3W*	RD	43.5			
	HD	58.5			

* The same dimensions apply to the anti-rust (U).

Note 1: When using a positioning hole, use a pin of the dimensions that do not require press fitting.
The recommended tolerance of a pin is JIS tolerance m6 or less.

Note 2: When installing rear side piping, check the safety precautions described in 1. Common; piping on page 170.

Dimensions (bore size: ø25)

● LCG-25-P7*

Stroke length: 10, 20, 30, 40, 50
(Mounting holes in the figure indicate when stroke length is 30)

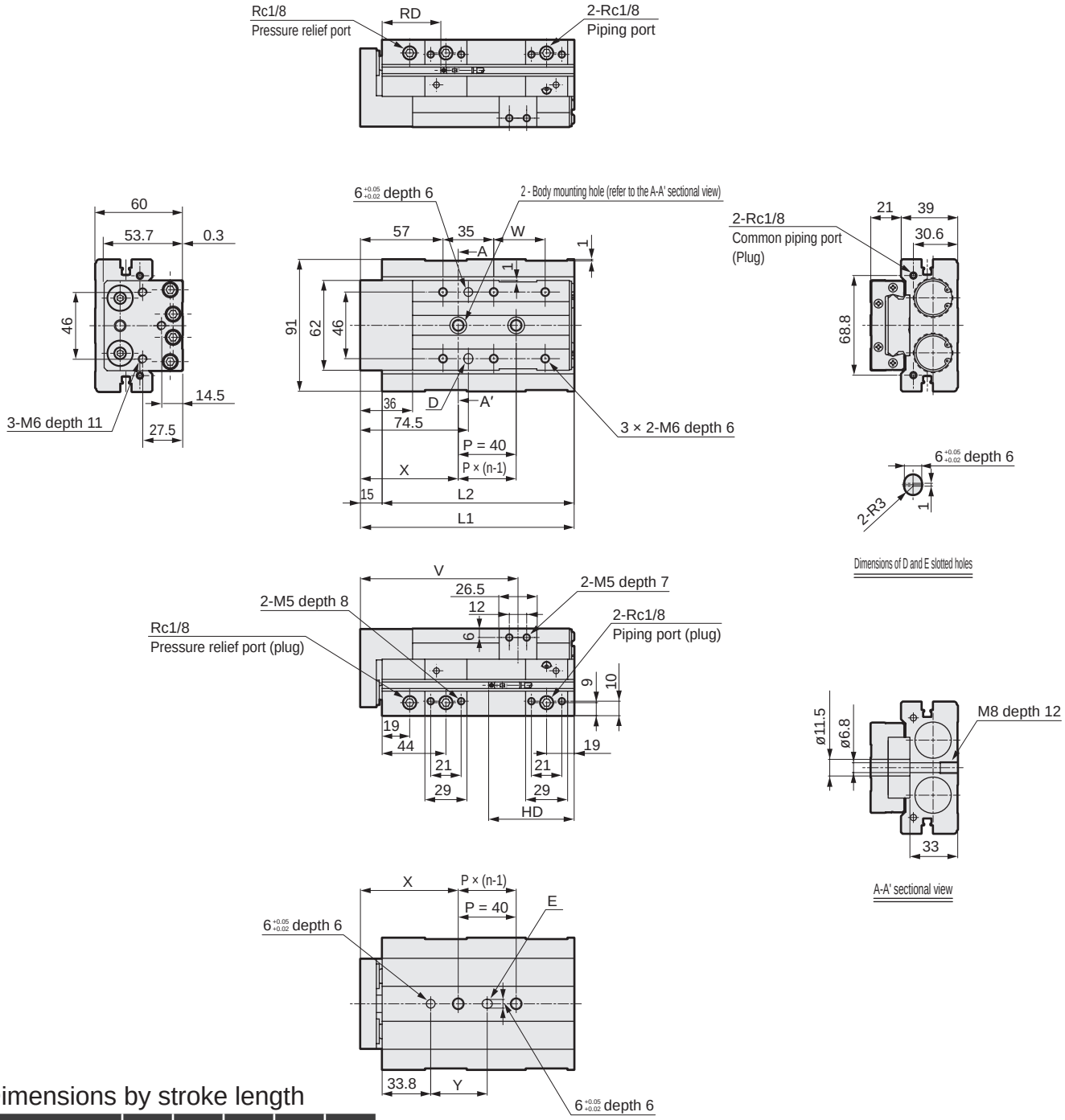

Dimensions by stroke length

Stroke length		10	20	30	40	50
L1		147.5			157.5	167.5
L2		132.5			142.5	152.5
n		2			3	2
V		108.8			118.8	128.8
W		35.5			45.5	55.5
X		67.5			70.5	85.5
Y		39			42	57
T0*/T5*	RD	43.5				
T2*/T3*	HD	79	69	59		
T2W*/T3W*	RD	46				
	HD	76.5	66.5	56.5		

* The same dimensions apply to the anti-rust (U).

Note 1: When using a positioning hole, use a pin of the dimensions that do not require press fitting.
The recommended tolerance of a pin is JIS tolerance m6 or less.

Note 2: When installing rear side piping, check the safety precautions described in 1. Common; piping on page 170.

Dimensions (bore size: ø25)

● LCG-25-P7*

Stroke length: 75, 100, 125, 150

Mounting holes in the figure indicate when stroke length is 100)

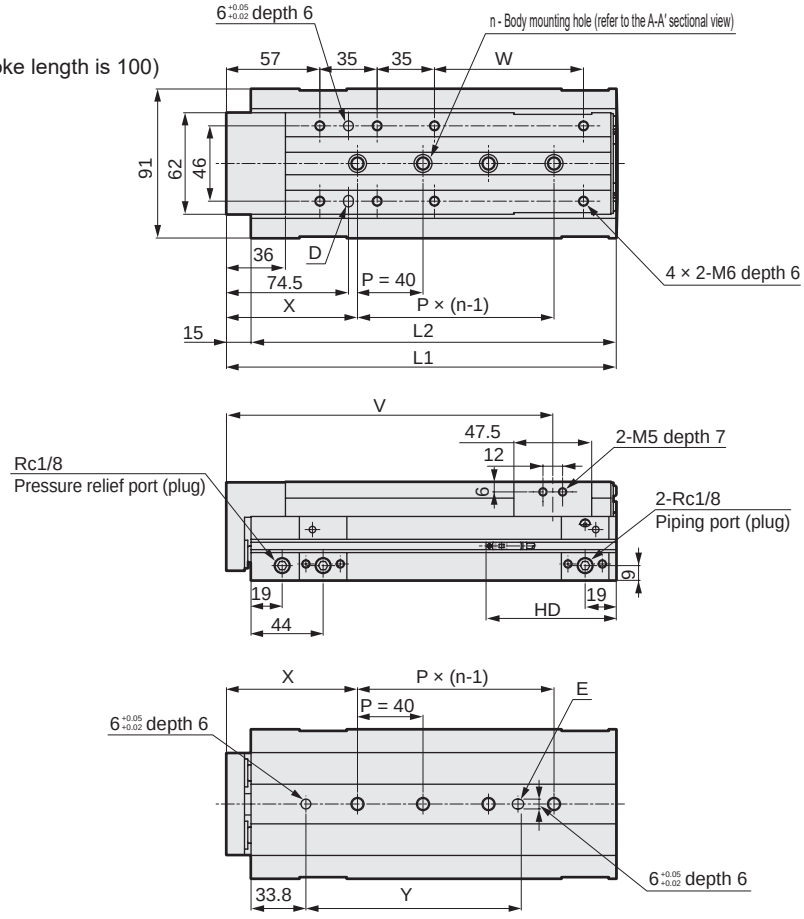

Dimensions by stroke length

Stroke length		75	100	125	150
L1		213	238	263	288
L2		198	223	248	273
n		3	4	5	
V		163.8	188.8	213.8	238.8
W		66	91	116	141
X		85	80	70	85
Y		96.5	131.5	161.5	176.5
T0*/T5*	RD	43.5			
T2*/T3*	HD	79.5			
T2W*/T3W*	RD	46			
	HD	77			

* The same dimensions apply to the anti-rust (U).

Note 1: When using a positioning hole, use a pin of the dimensions that do not require press fitting. The recommended tolerance of a pin is JIS tolerance m6 or less.

Note 2: When installing rear side piping, check the safety precautions described in 1. Common; piping on page 170.

Dimensions: Option

● Stroke adjusting stopper (S1 to S6)

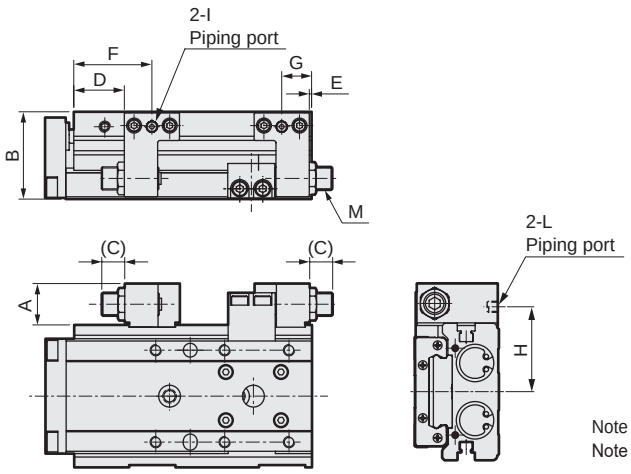

· For ø8

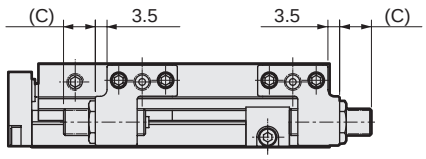

Note 1: F, H and L dimensions are only for the types with port on the stopper (S*D*).

Note 2: The figure of the stroke adjusting stopper (S1 to S6) is for 5 mm adjustable stroke range. If the adjustable stroke range is increased, the C dimension increases accordingly.

Code / Bore size (mm)	A	B	C Adjustable stroke range 5 mm	C 15 mm	C 25 mm	D	E	F	G	H	I	L	M
ø6	14	19.9	11	21	-	16	1	25.5	10.5	24	M3 depth 3	M3 depth 3	M8 × 0.75
ø8	15.6	24.5	9.5	19.5	-	20.5	0.5	30.5	11	27.3	M5 depth 4	M5 depth 4	M8 × 0.75
ø12	15.5	29	12	22	32	21	1	33	13	31	M5 depth 4	M5 depth 4	M8 × 0.75
ø16	18	37	10	20	30	22	1	34	13	39	M5 depth 4	M5 depth 4	M10 × 1
ø20	20.5	45.5	14.5	24.5	34.5	29	2.5	45.5	19	47	Rc1/8	M5 depth 4	M12 × 1
ø25	20.5	57	11.5	21.5	31.5	27.5	2.5	44	19	54.5	Rc1/8	M5 depth 4	M12 × 1

SCPD3
SCM
SSD2
MDC2
SMG
LCM
LCR
LCG
LCX
STM
STG
STR2
MRL2
GRC
Cylinder switch
MN3E MN4E
4GA/B
M4GA/B
MN4GA/B
F.R (module unit)
Clean F.R
Precision R
Press gauge Diff. press gauge
Electro-pneumatic R
Speed controller
Auxiliary valve
Fitting/ tube
Clean air unit
Pressure sensor
Flow rate sensor
Valve for air blow
Ending

STEP-1

❶ Calculate the load and the moment of impact occurring at the stroke end in different directions.

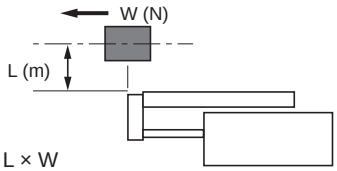

M1' = L × W

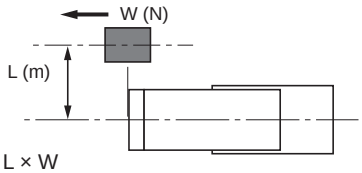

M3' = L × W

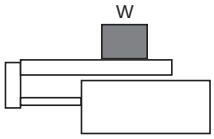

W' = W

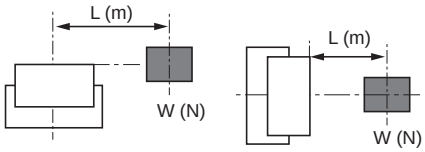

M2' = L × W

Obtain an approximate G coefficient in Table 1.

(Table 1) Va (average speed) = $\frac{\text{Distance traveled}}{\text{Time traveled}}$ (m/s)

Va average speed (m/s)	Vm Stroke length End speed (m/s)	G coefficient
Up to 0.07	Up to 0.1	5
Up to 0.2	Up to 0.3	14
Up to 0.27	Up to 0.4	19
Up to 0.35	Up to 0.5	24

G coefficient = ☐

M1' × G = ☐ (N·m)

M2' = ☐ (N·m)

M3' × G = ☐ (N·m)

W' = ☐ (N)

$E' = \frac{1}{2} \times (m + m_\alpha) \times Vm^2$

= ☐ (J)

$(m \fallingdotseq \frac{W}{9.8})$

❷ Select a temporary bore size that satisfies the following formula.

$$M'_T = \frac{M1' \times G}{M1'\ max} + \frac{M2'}{M2'\ max} + \frac{M3' \times G}{M3'\ max} + \frac{W'}{W'\ max} < 1$$

E' < E max

M' T : Resultant moment (must be smaller than 1)

G : G coefficient

W' max : Maximum allowable value of W' (from Table 2)

M1' max : Maximum allowable value of M1' (from Table 2)

M2' max : Maximum allowable value of M2' (from Table 2)

M3' max : Maximum allowable value of M3' (from Table 2)

E max : Maximum allowable value of E_0 (from Table 3)

m_α : Table weight (from Table 4)

(Table 2) Allowable static load

Bore size	Stroke length (mm)	Vertical load W'max (N)	Bending moment M1'max (N·m)	Radial moment M2'max (N·m)	Twist moment M3'max (N·m)
ø6	10 to 30	140	1.7	4.0	1.7
	40 to 50	186	10.7	6.0	10.7
ø8	10 to 30	152	3.4	6.8	3.4
	40 to 75	230	13.8	10.3	13.8
ø12	10 to 50	220.8	5.7	15.2	5.7
	75 to 100		22.2	21.0	22.2
ø16	10 to 50	380.8	17.8	36.0	17.8
	75 to 125		37.3	40.0	37.3
ø20	10 to 50	548.8	31.1	60.3	31.1
	75 to 150		56.2	61.6	56.2
ø25	10 to 50	961.5	65.1	131.8	65.1
	75 to 150		127.5	132.0	127.5

Note: When attaching a load to the end plate, even if selecting long stroke length (ø6, 8: 40 or more, ø12 or more: 75 or more), calculate the allowable values with short stroke length (ø6, 8: 30 or less, ø12 or more: 50 or less).

(Table 3) LCG allowable absorbed energy value (E_0)

Bore size	Standard (J)	With Stroke adjusting stopper (J)
ø6	0.025	0.0032
ø8	0.058	0.0032
ø12	0.112	0.014
ø16	0.176	0.043
ø20	0.314	0.055
ø25	0.314	0.14

(Table 4) Table weight (Unit: kg)

Bore size	Stroke length (mm)									P72/P73 Increment
	10	20	30	40	50	75	100	125	150	
ø6	0.060	0.060	0.070	0.085	0.095	-	-	-	-	0.005
ø8	0.080	0.080	0.090	0.110	0.125	0.150	-	-	-	0.015
ø12	0.210	0.210	0.210	0.235	0.260	0.335	0.400	-	-	0.025
ø16	0.315	0.315	0.315	0.350	0.380	0.515	0.595	0.680	-	0.035
ø20	0.475	0.475	0.475	0.520	0.565	0.715	0.820	0.930	1.035	0.045
ø25	0.785	0.785	0.785	0.845	0.915	1.200	1.360	1.515	1.680	0.075

STEP-2

Obtain a more accurate load factor, effective thrust, stroke end speed and resultant moment.

● Calculate the load factor.

$$\alpha = \frac{F_0}{F} \times 100\ [\%]$$

α : Load factor

F_0 : Force (N) required to move the workpiece

F : Theoretical cylinder thrust (N) (Table 5)

(Table 5) Theoretical thrust table (Unit: N)

Bore size (mm)	Operating direction	Working pressure MPa 0.15	0.2	0.3	0.4	0.5	0.6	0.7
ø6	PUSH	8	11	17	23	28	34	40
	PULL	6	8	13	17	21	25	30
ø8	PUSH	15	20	30	40	50	60	70
	PULL	11	15	23	30	38	45	53
ø12	PUSH	34	45	68	90	113	136	158
	PULL	25	34	51	68	85	102	119
ø16	PUSH	60	80	121	161	201	241	281
	PULL	52	69	104	138	173	207	242
ø20	PUSH	94	126	188	251	314	377	440
	PULL	79	106	158	211	264	317	369
ø25	PUSH	147	196	295	393	491	589	687
	PULL	124	165	247	330	412	495	577

For horizontal operation	For vertical operation
$F_0 = F_W$	$F_0 = W + F_W$
F_W: W × 0.2 Note (N)	
W: Load (N)	

Note: Coefficient of friction

(Table 6) Load factor guidelines

Working pressure MPa	Load factor (%)
0.2 to 0.3	α ≦ 40
0.3 to 0.6	α ≦ 50
0.6 to 0.7	α ≦ 60

STEP-3

Obtain the stroke end speed (Vm) and G coefficient from the average speed (Va) and load factor obtained in STEP-2.

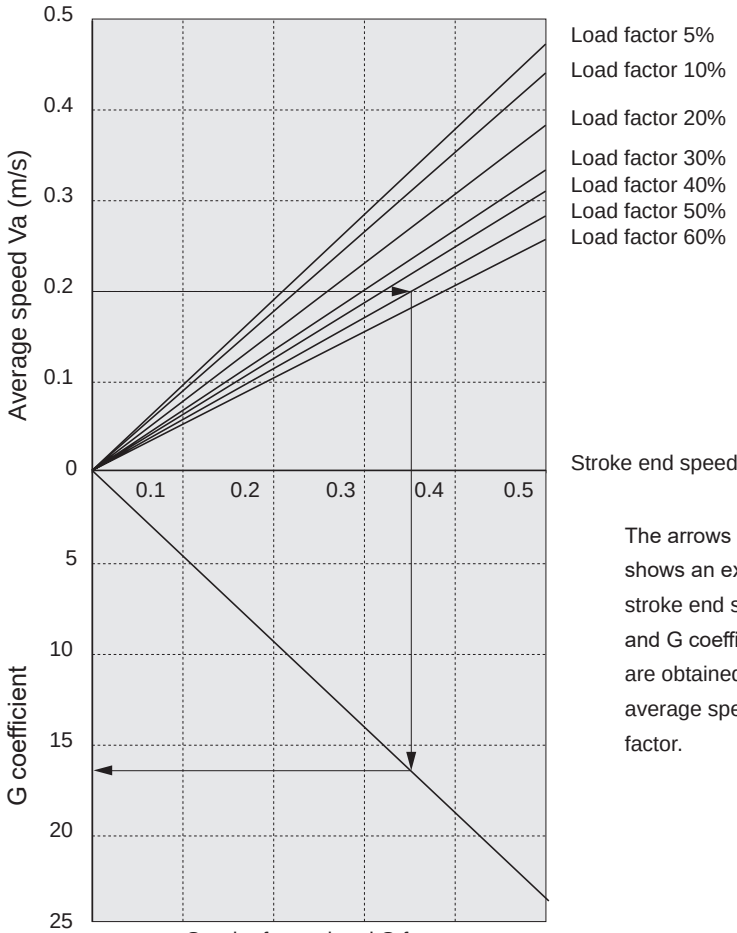

The arrows (→) in the figure shows an example that the stroke end speed of 0.35 m/s and G coefficient of 16.8 are obtained at the 0.20 m/s average speed and 50% load factor.

Graph of speed and G factor
G coefficient = [ ]

SCPD3
SCM
SSD2
MDC2
SMG
LCM
LCR
LCG
LCX
STM
STG
STR2
MRL2
GRC
Cylinder switch
MN3E MN4E
4GA/B
M4GA/B
MN4GA/B
F.R (module unit)
Clean F.R
Precision R
Press gauge Diff. press gauge
Electro-pneumatic R
Speed controller
Auxiliary valve
Fitting/ tube
Clean air unit
Pressure sensor
Flow rate sensor
Valve for air blow
Ending

STEP-4

Calculate the resultant moment (M_T) from the G factor and stroke end speed (Vm) obtained in STEP-3.

M1' × G = ☐ (N·m)

M2' = ☐ (N·m)

M3' × G = ☐ (N·m)

W' = ☐ (N)

$$M'_T = \frac{M1' \times G}{M1'\ max} + \frac{M2'}{M2'\ max} + \frac{M3' \times G}{M3'\ max} + \frac{W'}{W'\ max} = \square$$

Obtain M_T (resultant moment during movement). (Note that it differs from what you obtained in STEP-1.)

● Vertical load: W (N)

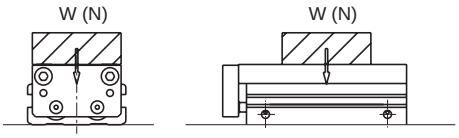

● Bending moment: M1 (N·m)

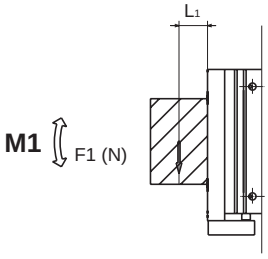

$M1 = F1 \times L_1$

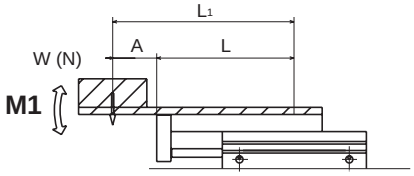

$M1 = W \times L_1$

$L_1 = A + L$

L is a value in the table below.

● Radial moment: M2 (N·m)

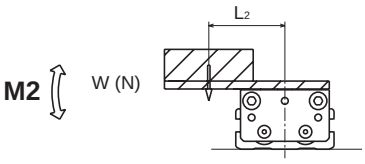

$M2 = W \times L_2$

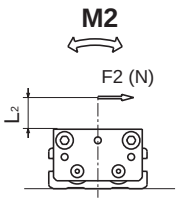

$M2 = F2 \times L_2$

● Twist moment: M3 (N·m)

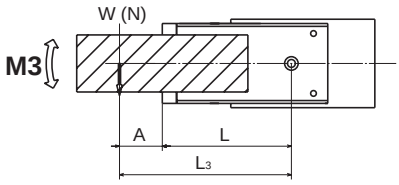

$M3 = W \times L_3$

$L_3 = A + L$

L is a value in the table below.

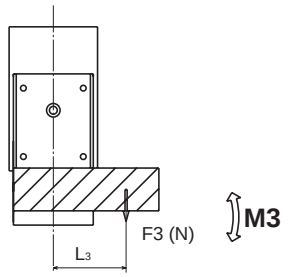

$M3 = F3 \times L_3$

L value

Unit (m)

Bore size	Stroke length									P72/P73
	10	20	30	40	50	75	100	125	150	Increment
ø6	0.039	0.0415	0.049	0.0615	0.069	-	-	-	-	0.012
ø8	0.0395	0.042	0.0495	0.0615	0.069	0.088	-	-	-	0.020
ø12	0.053	0.0555	0.058	0.0655	0.073	0.096	0.115	-	-	0.020
ø16	0.0555	0.058	0.0605	0.068	0.0755	0.1025	0.1215	0.140	-	0.020
ø20	0.0635	0.066	0.0685	0.076	0.0835	0.108	0.127	0.1455	0.1645	0.025
ø25	0.0695	0.072	0.0745	0.082	0.0895	0.1185	0.1375	0.156	0.175	0.025

M1 = M1 = [ ] (N·m)

M2 = M2 = [ ] (N·m)

M3 = M3 = [ ] (N·m)

W = W = [ ] (N)

$$M_T = \frac{M1}{M1\ max} + \frac{M2}{M2\ max} + \frac{M3}{M3\ max} + \frac{W}{W\ max} = [\ ]$$

M_T : Synthesis of moment

W max : Maximum allowable value of W (from Table 7)

M1 max : Maximum allowable value of M1 (from Table 7)

M2 max : Maximum allowable value of M2 (from Table 7)

M3 max : Maximum allowable value of M3 (from Table 7)

E max : Maximum allowable value of E_0 (from Table 3)

(Table 7) Allowable moving load

Bore size	Stroke length (mm)	Vertical load Wmax (N)	Bending moment M1max (N·m)	Radial moment M2max (N·m)	Twist moment M3max (N·m)
ø6	10 to 30	14	0.17	0.40	0.17
	40 to 50	15.5	0.89	0.50	0.89
ø8	10 to 30	15.2	0.34	0.68	0.34
	40 to 75	19.2	1.1	0.86	1.1
ø12	10 to 50	27.6	0.71	1.9	0.71
	75 to 100		2.2	2.1	2.2
ø16	10 to 50	47.6	1.9	4.0	1.9
	75 to 125		4.6	5.0	4.6
ø20	10 to 50	68.6	3.4	6.7	3.4
	75 to 150		7.0	7.7	7.0
ø25	10 to 50	128.2	7.6	15.5	7.6
	75 to 150		17.0	17.6	17.0

Note: When attaching a load to the end plate, even if selecting long stroke length (ø6, 8: 40 or more, ø12 or more: 75 or more), calculate the allowable values with short stroke length (ø6, 8: 30 or less, ø12 or more: 50 or less).

Confirm M_T, $M'_T \leq 1$.

↓

Bore size is decided.

↓

øA

STEP-5

Confirming the allowable absorbed energy

$$E = \frac{1}{2} \times (m + m_\alpha) \times Vm^2$$

E : Kinetic energy at workpiece end (J)

m : Load weight (kg) ($m \fallingdotseq \frac{W\ (N)}{9.8}$)

m_α : Table weight (from Table 4)

Vm : Stroke end speed (m/s)

E max : Maximum allowable value of E_0 (from Table 3)

Confirm E ≤ E max.

↓

Bore size is decided.

↓

øB

STEP-6

Bore size decided in STEP-4
(load conditions)

øA

Bore size decided in STEP-5
(allowable absorbed energy)

øB

øA ≦ øB → øB Select

or → øA and external damper are used together or a shock absorber stopper is attached.

øA > øB → øA Select

Technical data ❶: Displacement at the table end (reference value)

SCPD3
SCM
SSD2
MDC2
SMG
LCM
LCR
LCG
LCX
STM
STG
STR2
MRL2
GRC
Cylinder switch
MN3E MN4E
4GA/B
M4GA/B
MN4GA/B
F.R (module unit)
Clean F.R
Precision R
Press gauge Diff. press gauge
Electro-pneumatic R
Speed controller
Auxiliary valve
Fitting/ tube
Clean air unit
Pressure sensor
Flow rate sensor
Valve for air blow
Ending

Displacement at point A

[Displacement of the table due to M1 moment]

Displacement at the table end when the load (F1) is applied to the table end

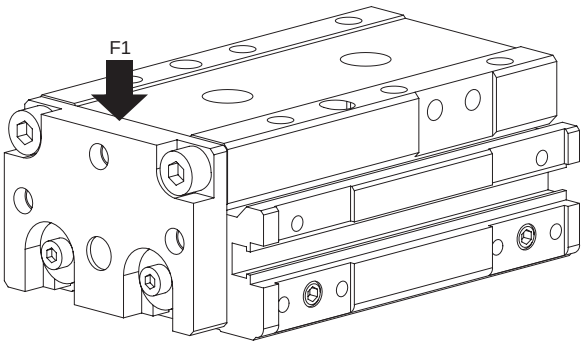

LCG-6 (M1)

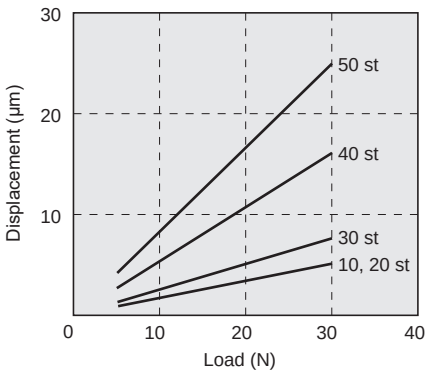

LCG-8 (M1)

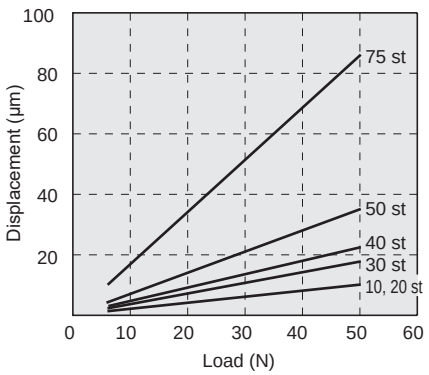

LCG-12 (M1)

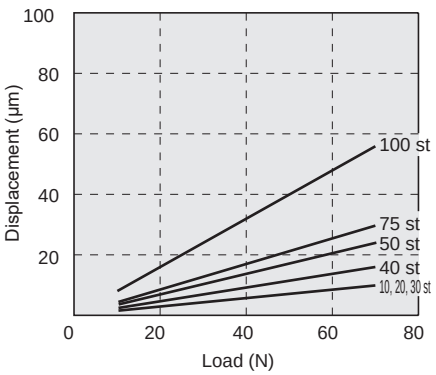

LCG-16 (M1)

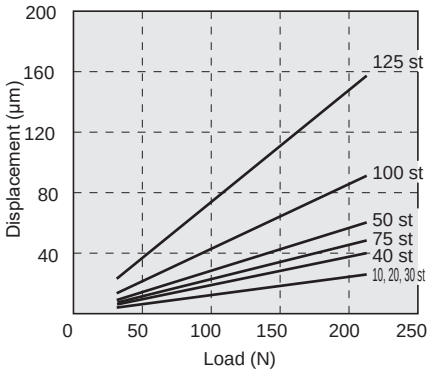

LCG-20 (M1)

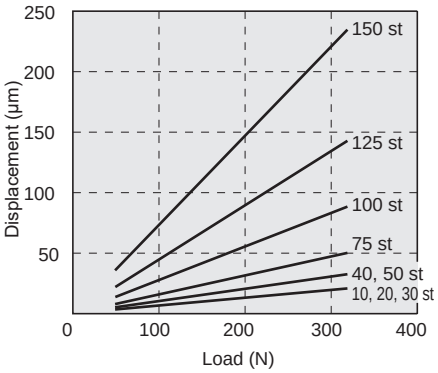

LCG-25 (M1)

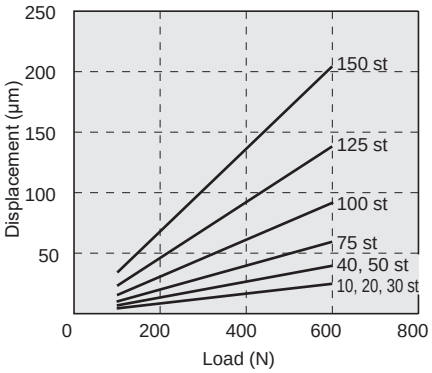

Displacement at point A

[Displacement of the table due to M2 moment]

Displacement at the table end (point A) when the load (F2) is applied to the point L mm away from the center of the cylinder

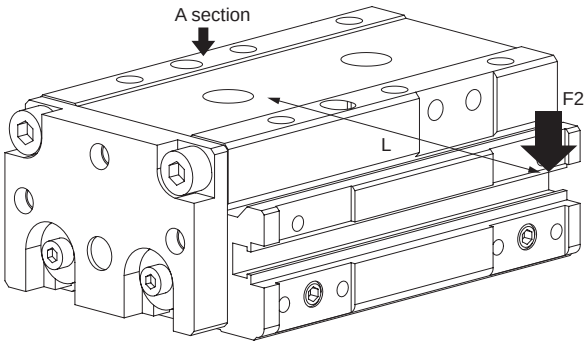

L value
ø 6 : L = 70, ø 8 : L = 70
ø12 : L = 90, ø16 : L = 100
ø20 : L = 100, ø25 : L = 200

LCG-6 (M2)

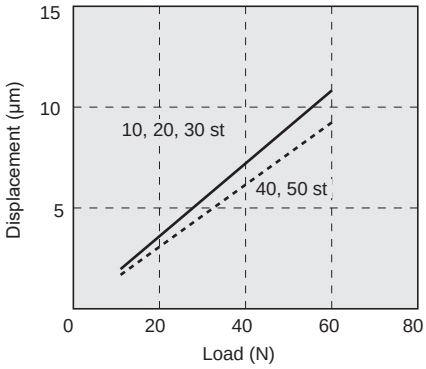

LCG-8 (M2)

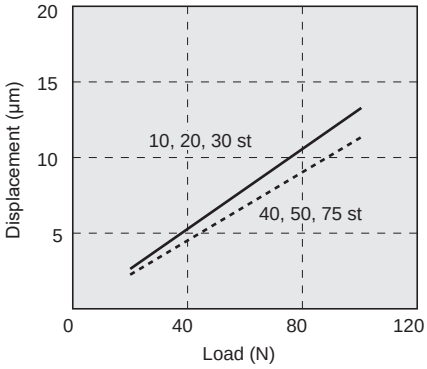

LCG-12 (M2)

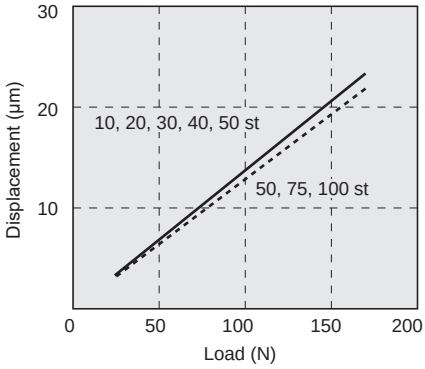

LCG-16 (M2)

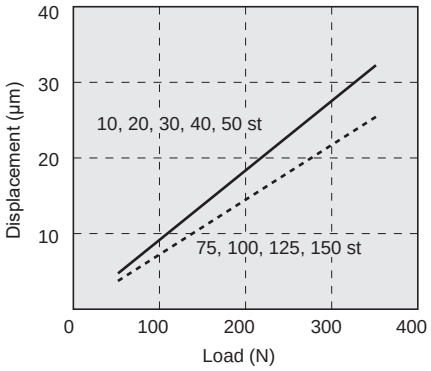

LCG-20 (M2)

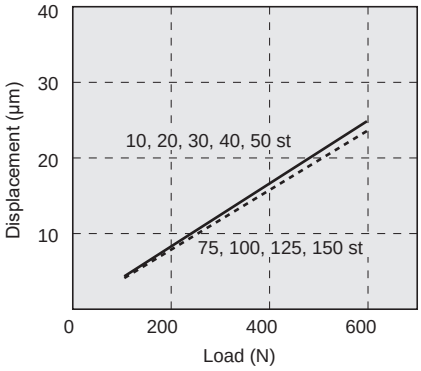

LCG-25 (M2)

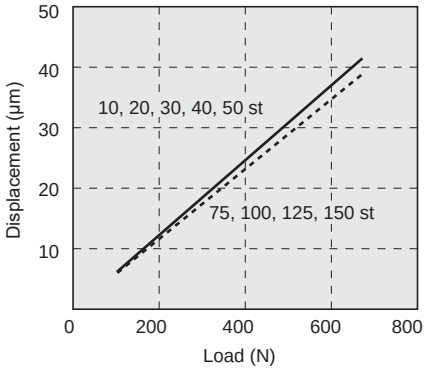

Displacement at point A

[Angular table deflection due to M3 moment]

Displacement angle of the table when the rotation moment (M3) is applied to the cylinder

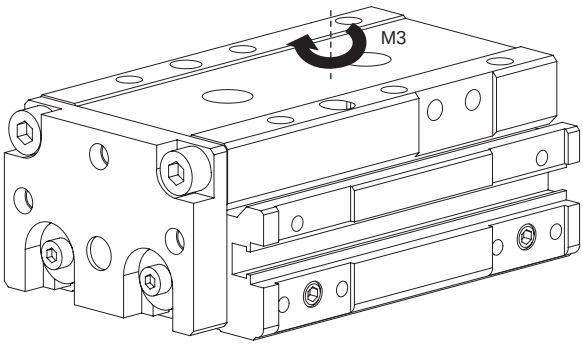

LCG-6 (M3)

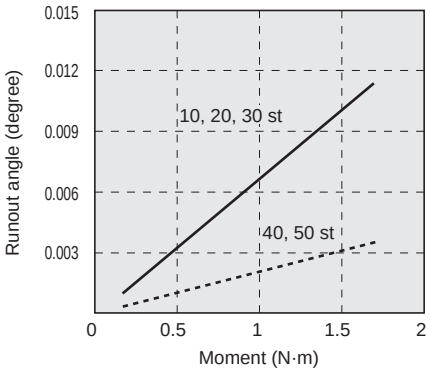

LCG-8 (M3)

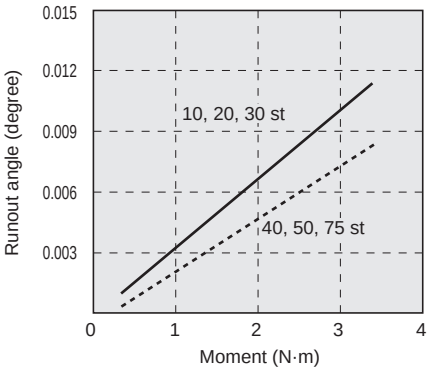

LCG-12 (M3)

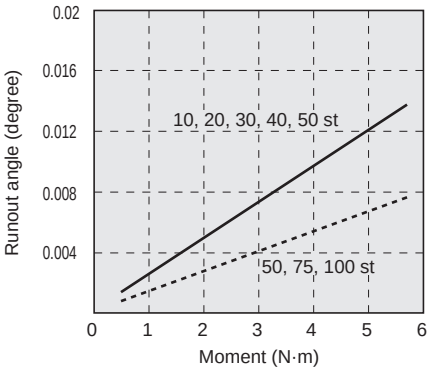

LCG-16 (M3)

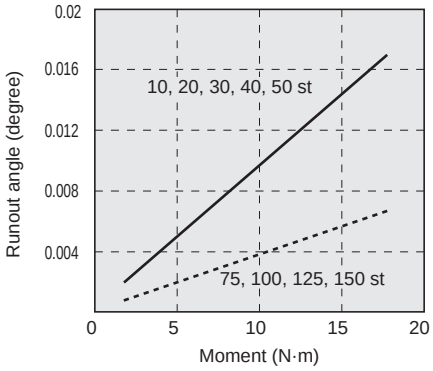

LCG-20 (M3)

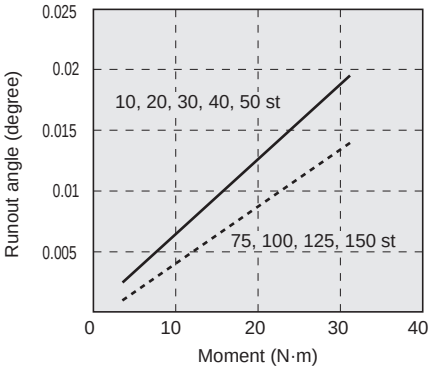

LCG-25 (M3)

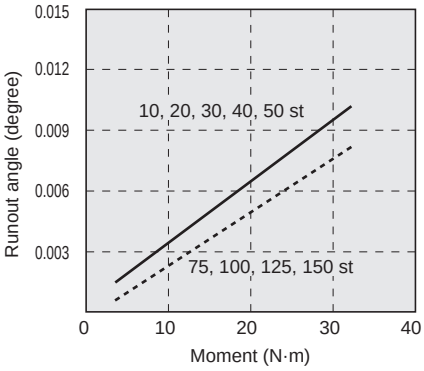

MEMO

Pneumatic components

Safety Precautions

Be sure to read this section before use.
Refer to page 2 for general information of the cylinder, and to page 320 for general information of the cylinder switch.

Linear slide cylinder LCG Series

Design & selection

1. Common

CAUTION

■ When selecting the cylinder, follow the "LCG selection guide" on pages 162 to 165.

■ Protect the cylinder with a cover to prevent damage and malfunction in a place where it is exposed to water or oil drops, or corrosive conditions.

■ Precautions for mounting the switch

- When using the T□V switch with a stroke adjusting stopper (S3**/S4**/S5**/S6**) or shock absorber stopper (A3**/A4**/A5**/A6**), install the switch on the opposite side to the stopper. Otherwise the switch on the head end will make contact with the stopper.
- Be careful of the lead wire direction when designing the 30 mm or less stroke length since a switch is installed in each groove of the body.

■ Putting a strong magnet close to the product may cause magnetization of the table, which may result in an accidental operation of the switch.

Mounting installation & adjustment

1. Common; when piping

CAUTION

■ Apply adhesive to the M3 and M5 plugs (hexagon socket set screws) when changing the piping port position (Low strength adhesives such as LOCTITE 222/221 or Three Bond 1344 is recommended)

■ Piping port position and operating direction

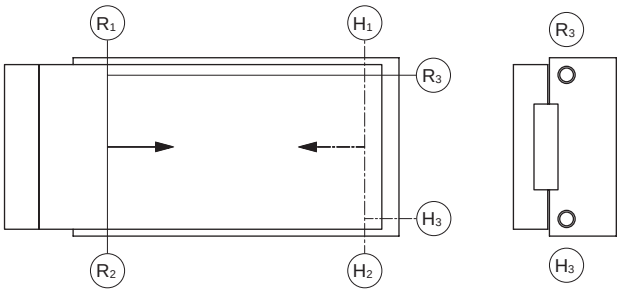

Ⓡ shows the rod end pressurizing port and Ⓗ the head end pressurizing port. When the product is shipped from the factory, ports other than R_1 and H_1 (R_2 and H_2 depending on the stopper position when a stopper is attached) are sealed with plugs.

■ Rear piping

Rear piping (R_3 and H_3 ports in the figure above) is possible except for the position locking. Remove the plugs sealing the R_3 and H_3 ports and seal the R_1 and H_1 ports with the plugs shown in the table on the right.

Descriptions	Plug
LCG-6	Seal the R_1 and H_1 ports with the plugs removed from the R_3 and H_3 ports.
LCG-8	M5 × 5 (hexagon socket set screw)
LCG-12	
LCG-16	
LCG-20	R1/8 (hexagon socket head tapered screw plug)
LCG-25	Seal the R_1 and H_1 ports with the plugs removed from the R_3 and H_3 ports.

You should prepare two plugs specified in the table above for those of ø8 to 20.

■ Precautions for piping

Be sure to install a speed controller during piping. The available fittings are as below.

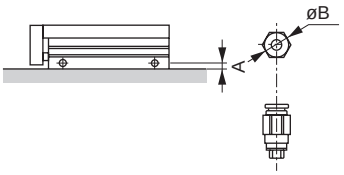

Descriptions / Bore size (mm)	Port diameter	Port location dimensions A	Applicable fitting	Fitting O.D. B
ø6	M3	4	SC3W-M3-4-P7* SC3W-M3-3.2-P7* GWS3-M3-S-P7* GWS4-M3-S-P7*	ø8 or less
ø8	M5	5.5	SC3W-M5-4-P7* SC3W-M5-6-P7* GWS4-M5-S-P7* GWS4-M5-P7*	ø11 or less
ø12		5.5		
ø16		6.5	SC3W-M5-4-P7* SC3W-M5-6-P7* GWS4-M5-S-P7* GWS4-M5-P7* GWL4-M5-P7* GWL6-M5-P7* GWS6-M5-P7*	ø13 or less
ø20	Rc1/8	8	SC3W-6-4,6,8-P7* GWS4-6-P7* GWS8-6-P7* GWL6-6-P7* GWS6-6-P7* GWL4-6-P7*	ø15 or less
ø25		9		

2. Common; when installing

⚠ CAUTION

■ Do not damage the surface flatness by denting or scratching the body (tube) mounting surface or the table surface.
In addition, make sure that the flatness of the mating surface for body and table mounting is 0.02 mm or less.

■ Observe the following bolt insertion lengths and tightening torque when mounting the body.

[Fig. 1]

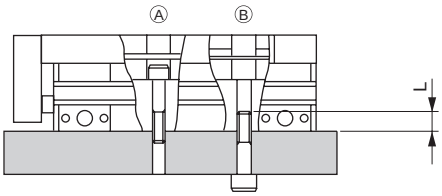

Descriptions	Ⓐ		Ⓑ		
	Applicable bolts	Tightening torque (N·m)	Applicable bolts	Tightening torque (N·m)	Max. insertion length L (mm)
LCG-6	M3 × 0.5	0.6 to 1.1	M4 × 0.7	1.4 to 2.4	6
LCG-8	M3 × 0.5	0.6 to 1.1	M4 × 0.7	1.4 to 2.4	6
LCG-12	M4 × 0.7	1.4 to 2.4	M5 × 0.8	2.9 to 5.1	8
LCG-16	M5 × 0.8	2.9 to 5.1	M6 × 1.0	4.8 to 8.6	9
LCG-20	M5 × 0.8	2.9 to 5.1	M6 × 1.0	4.8 to 8.6	9
LCG-25	M6 × 1.0	4.8 to 8.6	M8 × 1.25	12.0 to 21.6	12

■ Observe the following bolt insertion lengths and tightening torque when installing the jig on the slide table or end plate.

[Fig. 2]

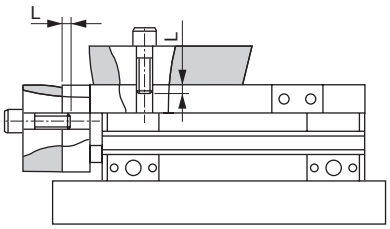

Descriptions	Table			End plate		
	Applicable bolts	Tightening torque (N·m)	Max. insertion length L (mm)	Applicable bolts	Tightening torque (N·m)	Insection lengh L (mm)
LCG-6	M3 × 0.5	0.6	3	M3 × 0.5	0.6	4.5 to 6
LCG-8	M3 × 0.5	0.6	3	M3 × 0.5	0.6	4.5 to 7
LCG-12	M4 × 0.7	1.4	4	M4 × 0.7	1.4	6 to 9
LCG-16	M5 × 0.8	2.9	5	M5 × 0.8	2.9	7.5 to 9
LCG-20	M5 × 0.8	2.9	5	M5 × 0.8	2.9	7.5 to 11
LCG-25	M6 × 1.0	4.8	6	M6 × 1.0	4.8	9 to 11

■ Observe the following tightening torque of bolts and nuts of the stopper.

[Fig. A]

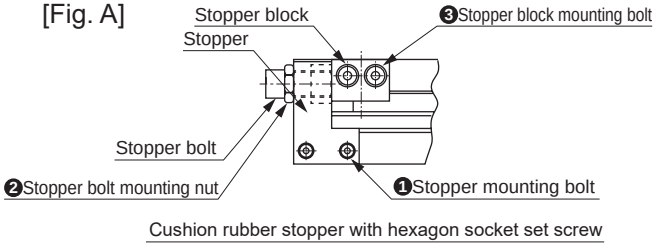

Model No.	❶Stopper mounting bolt (N·m)	❷Stopper bolt mounting nut (N·m)	❸Stopper block mounting bolt (N·m)
LCG-6	0.4 to 0.5	1.2 to 2.0	0.6 to 0.8
LCG-8	0.4 to 0.5	1.2 to 2.0	0.6 to 0.8
LCG-12	0.6 to 0.8	1.2 to 2.0	0.6 to 0.8
LCG-16	0.6 to 0.8	3.0 to 4.0	1.4 to 1.8
LCG-20	2.9 to 3.5	4.5 to 6.0	1.4 to 1.8
LCG-25	2.9 to 3.5	4.5 to 6.0	2.9 to 3.5

■ The cylinder switch may malfunction if there is a magnetic substance such as a metal plate installed adjacently. To ensure safe operation, keep it 10 mm and over away from the cylinder surface or change the installation surface of the cylinder switch. (Common for all port sizes)

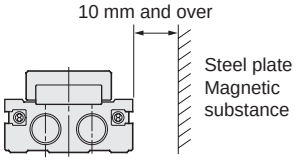

■ The cylinder switches may accidentally function if the cylinders are close to each other. Keep the distance below between the surfaces of the cylinders. (Common for all port sizes)

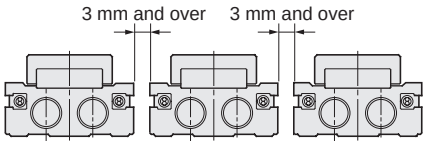

■ When using a positioning hole, use a pin of the dimensions which does not require press fitting. If a pin is press fitted, the load of press fitting may damage or distort the linear guide, lowering the accuracy.
The recommended tolerance of a pin is JIS tolerance m6 or less.

During use & maintenance

1. Common

⚠ CAUTION

■ Apply AFF grease (THK) to the guide rail surface after six months or when the number of operation cycles reaches one million, whichever comes first.

■ Note that the table is not fully corrosion-proof.

The table is made of martensite stainless steel (ø6 to ø16) or alloy steel (ø20 and ø25). It may rust in an environment where the temperature and humidity is high or condensation may occur on the product surface.

LCX

Linear slide cylinder

ø25/ø32

Combined functions

Overview

Thin, light, rigid linear slide cylinder perfect for narrow space.

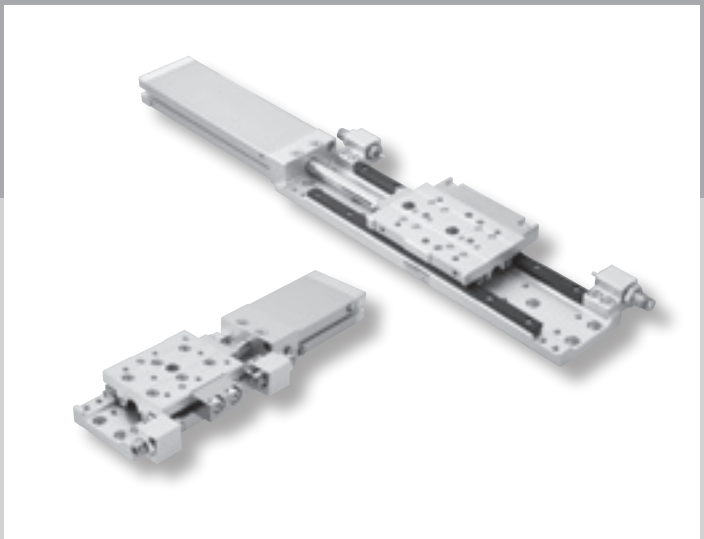

CONTENTS

Product introduction 174

● **Double acting/single rod clean room specifications (LCX-P7*) 176**

● **Double acting/single rod clean room specifications/long stroke (LCX-*L-P7*) 182**

Selection guide 188

⚠ Safety precautions 196

Thin, light, rigid LCX Series

A wide variety of option variations are available for use in more applications.

Thin

About 50% thinner than the conventional model (LCG).
The height **reduced from 60 mm to 34 mm**.
The extremely thin body can fit to narrow space.

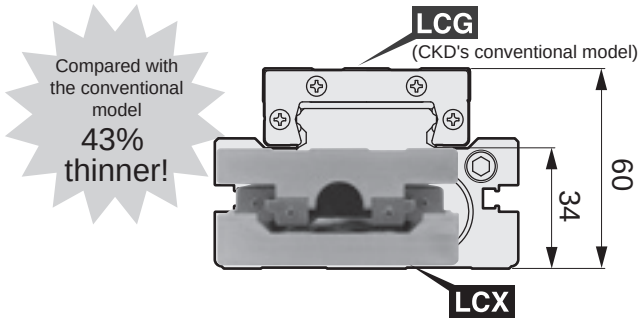

Lightweight

50% lighter than the conventional model (LCG).
The moving part becomes lighter and thus enables efficient, energy-saving equipment.

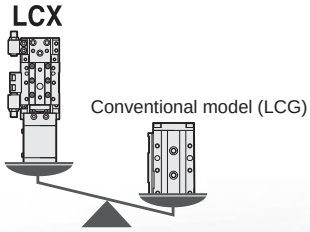

Rigid

The separate linear guide provides **the same level of rigidity as the conventional model (LCG)**, even with the thin and light body.

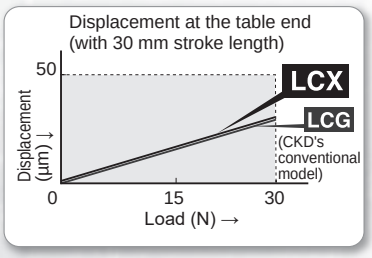

A wide range of variations

- A center stopper is available (custom order product)
  Displacement can be minimized since the stopper does not cause a moment at the stroke end.

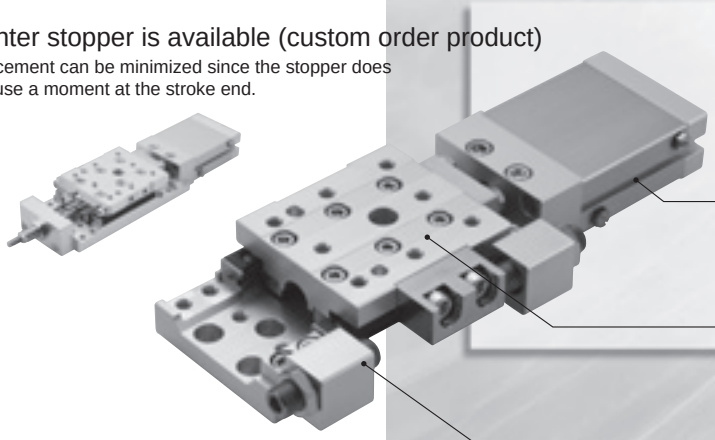

- Laterally symmetrical
  Pipes and stoppers can be installed on both the right and left sides.
  ⬅ shows the piping direction.

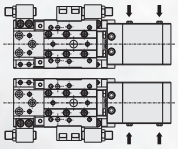

- Compatible with T switch
  The proximity 2-color display switch is available.

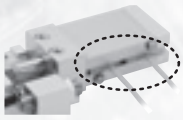

- Anti-rust
  Anti-rust treated as standard.
- Different of stoppers

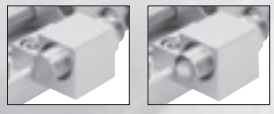

■ Metal stopper ■ Rubber cushion stopper

LCX Series

Linear slide cylinder

Integrated units - simple, secure, high precision

Components can be combined as desired. Select from various options such as the position locking, long stroke (max. 150 mm) and with a positioning hole. Use the integrated units in a wide range of uses including conveyor and positioning so as to improve productivity of multiple products.

High precision positioning mechanism

Components can be simply combined with high precision positioning holes and a special bolt **for positioning**. Adjusting the positions is not necessary.

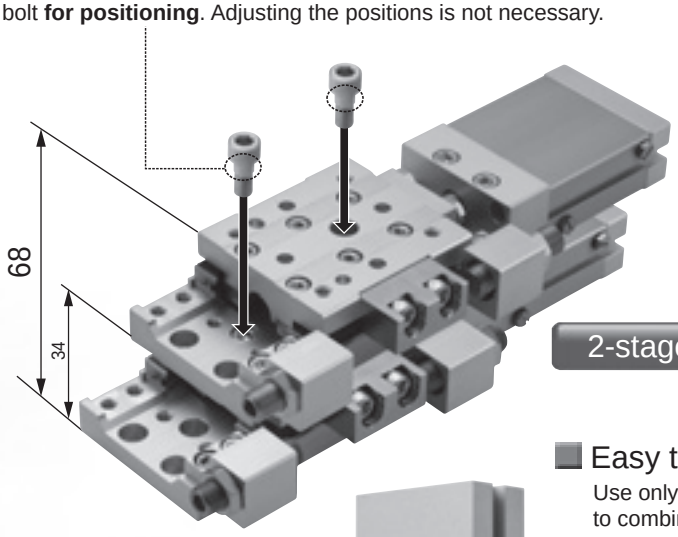

2-stage unit

Only 68 mm even when components are stacked

Direct mount without connecting plates enables thin profile design.

Easy to install

Use only a Alan wrench to combine the components.

Rigid, wide guide

42 mm wide rail fits inside.

Cross unit

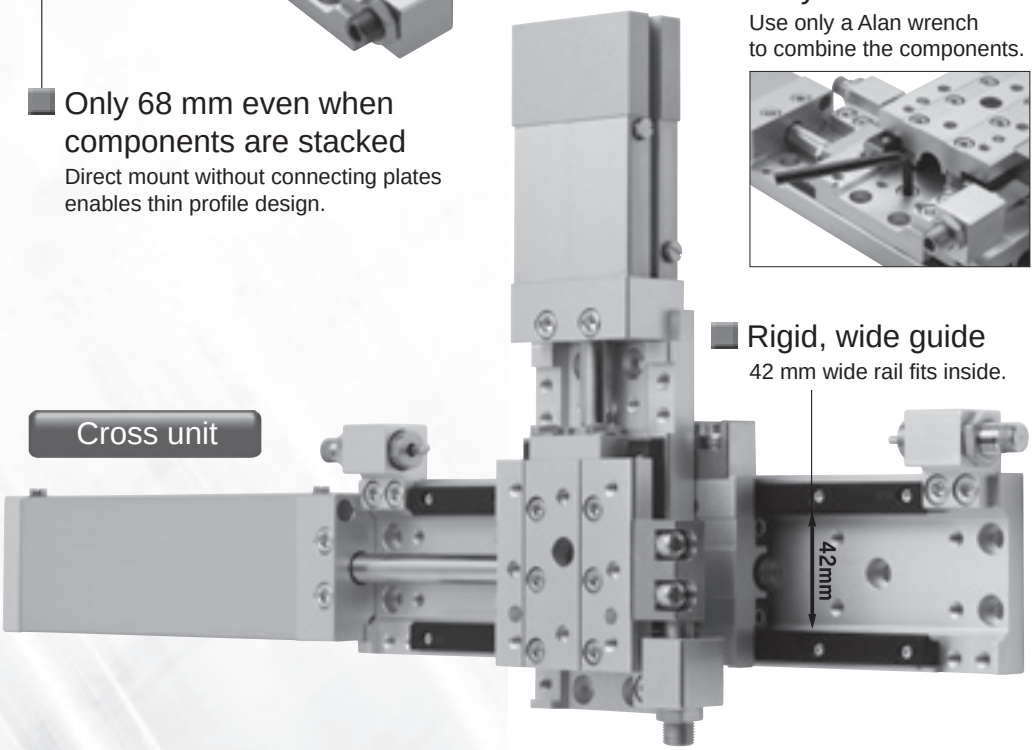

Large reduction in maintenance time

The cylinder can be replaced with the body installed on the equipment.

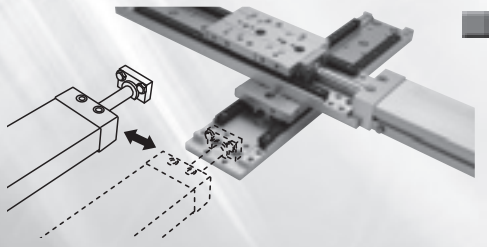

■ LCX product variations

LCX-P7*

Double acting/single rod
Clean room specifications

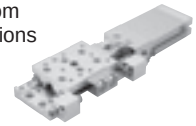

ø 25, ø 32
Stroke length: 10 to 50 mm

LCX-*L-P7*

Double acting/single rod
clean room specifications
Long stroke

ø 25, ø 32
Stroke length: 75 to 150 mm

* The picture shows the standard product.

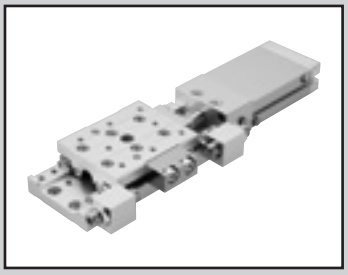

Linear slide cylinder Double acting/single rod clean room specifications

LCX Series

● Bore size: ø25/ø32

JIS symbol

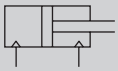

RoHS CAD

Specifications

Descriptions	LCX-P7*	
Bore size mm	ø25	ø32
Actuation	Double acting	
Working fluid	Compressed air	
Max. working pressure MPa	0.7	
Min. working pressure MPa	0.15	
Proof pressure MPa	1.05	
Ambient temperature °C	-10 to 60 (no freezing) (*1)	
Port size	M5	
Port size (relief port)	M5	
Stroke tolerance mm	+2.0 0 (*2)	
Working piston speed mm/s	20 to 500	
Cushion	With rubber cushion	
Lubrication	Not available	
Allowable energy absorption J	Refer to table 3 on page 189.	

*1: Contact CKD if the use environment is always cold (5°C or less) or hot (40°C and over).
*2: Note that there will be a slight gap between the end plate and floating bush if no stopper is attached.
*3: Keep within 20 to 200 mm/s when using a metal stopper.

Structure and material restriction

	Structure	Model No.
P7 Series	Exhaust treatment	P72
	Vacuum treatment	P73

Stroke length

Bore size (mm)	Standard stroke length (mm)
ø25	10, 20, 30, 40, 50
ø32	10, 20, 30, 40, 50

Note: Stroke lengths other than above are not available.

Theoretical thrust table

Refer to page 188.

Switch specifications

● 1-color/2-color display

Descriptions	Reed 2-wire				Proximity 2-wire		Proximity 3-wire		
	T0H/T0V		T5H/T5V		T2H/T2V	T2WH/T2WV	T3H/T3V	T3PH/T3PV	T3WH/T3WV
Applications	Programmable controller, relay		Programmable controller, relay IC circuit (without indicator lamp), serial connection		Programmable controller		Programmable controller, relay		
Output method	-		-		-		NPN output	PNP output	NPN output
Power supply voltage	-		-		-		10 to 28 VDC		
Load voltage	12/24 VDC	110 VAC	5/12/24 VDC	110 VAC	10 to 30 VDC	24 VDC±10%	30 VDC or less		
Load current	5 to 50 mA	7 to 20 mA	50 mA or less	20 mA or less	5 to 20 mA (*2)		100 mA or less		50 mA or less
Indicator lamp	LED (Lit when ON)		Without indicator lamp		LED (Lit when ON)	Red/green LED (Lit when ON)	LED (Lit when ON)	Yellow LED (Lit when ON)	Red/green LED (Lit when ON)
Leakage current	0 mA				1 mA or less		10 μA or less		
Weight g	1 m: 18 3 m: 49 5 m: 80				1 m: 18 3 m: 49 5 m: 80		1 m: 18 3 m: 49 5 m: 80		

*1: Refer to page 309 for detailed switch specifications and dimensions.
*2: The maximum load current of 20 mA is for 25°C. The current will be lower than 20 mA when operating ambient temperature around the switch is higher than 25˚C. (5 to 10 mA at 60°C)

Cylinder weight

● Clean room specifications (Unit: g)

Bore size (mm)	Basic Stroke length (mm)				
	10	20	30	40	50
ø25	1,010	1,040	1,060	1,180	1,200
ø32	1,060	1,090	1,110	1,240	1,260

● Weight of variation/option (stopper) (Unit: g)

Bore size (mm)	Option/stopper code			
	S1 to S4	M1 to M4	S5/S6	M5/M6
ø25	170		240	
ø32				

How to order

Without switch (Magnet for switch incorporated)

LCX - 25 - 40 ———— S5 E P72

With switch (Magnet for switch incorporated)

LCX - 25 - 40 - T2H* - R - S1T E P72

Model No.
Ⓐ Bore size
Ⓑ Stroke length
Ⓒ Switch model No. *7
Ⓓ Switch quantity
Ⓔ Stopper
Ⓕ Option
Ⓖ Clean room specifications

Code	Content
Ⓐ Bore Code size	
25	ø25
32	ø32

Ⓑ Stroke length (mm)	
10	10
20	20
30	30
40	40
50	50

Ⓒ Switch model No.

Lead wire straight	Lead wire L-shaped	Contact	Voltage AC	Voltage DC	Display	Lead wire
T0H*	**T0V***	Reed	●	●	1-color display	2 wires
T5H*	**T5V***	Reed	●	●	Without indicator lamp	2 wires
T2H*	**T2V***	Proximity		●	1-color display	2 wires
T3H*	**T3V***	Proximity		●	1-color display	3 wires
T3PH*	**T3PV***	Proximity		●	1-color display (PNP output)	3 wires
T2WH*	**T2WV***	Proximity		●	2-color display	2 wires
T3WH*	**T3WV***	Proximity		●	2-color display	3 wires

*** Lead wire length**	
Blank	1 m (standard)
3	3 m (option)
5	5 m (option)

Ⓓ Switch quantity	
R	1 (on rod end)
H	1 (on head end)
D	2

Ⓔ Stopper		
Blank	Without stopper	
S Cushion cushion stopper		***1, *4**
S1*	Stopper position (1) (can be changed to (4))	Stopper mounting position
S2*	Stopper position (2) (can be changed to (3))	Stopper mounting position
S3*	Stopper position (3) (can be changed to (2))	Stopper mounting position
S4*	Stopper position (4) (can be changed to (1))	Stopper mounting position
S5*	Stopper position (1), (3)	Stopper mounting position
S6*	Stopper position (2), (4)	Stopper mounting position
M Metal stopper		***1, *3, *4, *5**
M1*	Stopper position (1) (can be changed to (4))	Stopper mounting position
M2*	Stopper position (2) (can be changed to (3))	Stopper mounting position
M3*	Stopper position (3) (can be changed to (2))	Stopper mounting position
M4*	Stopper position (4) (can be changed to (1))	Stopper mounting position
M5*	Stopper position (1), (3)	Stopper mounting position
M6*	Stopper position (2), (4)	Stopper mounting position
*** Part**		
Blank	Stopper block material: Rolled steel	
T	Stopper block material: Alloy steel (nitriding)	*2

Ⓕ Option	
Blank	No option
E	With positioning hole

Ⓖ Clean room specifications	
	Structure
P72	Exhaust treatment
P73	Vacuum treatment

⚠ Precautions for model No. selection

*1: To change the adjustable stroke length, use a discrete rubber cushion stopper or metal stopper on page 178.
*2: Can be selected for the type with stopper only.
*3: The alloy steel stopper block (code: T) is recommended for a metal stopper.
*4: Combination of the rubber cushion stopper and metal stopper is custom order.
*5: Keep within 20 to 200 mm/s when using a metal stopper.
*6: Refer to page 179 for a discrete cylinder model No.
*7: Be careful of the lead wire direction when designing the 30 mm or less stroke length of axial lead wire and the 20 mm stroke length of radial lead wire since a switch is installed in each groove of the body.

[Example of model No.]

LCX-25-40-T2H-R-S1TEP72

Model No.: Linear slide cylinder Double acting/ single rod (clean room specifications) LCX-P7*

Ⓐ Bore size : ø25
Ⓑ Stroke length : 40 mm
Ⓒ Switch model No.: Proximity/2 wires/Lead wire 1 m Lead wire straight
Ⓓ Switch quantity : 1 (on rod end)
Ⓔ Stopper : Rubber cushion stopper Stopper position (1) Material, alloy steel (nitriding)
Ⓕ Option : With positioning hole
Ⓖ Clean room specifications : Exhaust treatment

● Stopper position

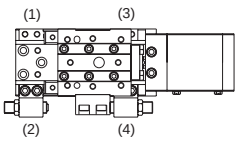

How to order switch

SW - T2H3

Switch model No.
(Item Ⓒ on page 177)

How to order a stopper set

- A set of a stopper and rubber cushion stopper or metal stopper
- Use this when changing from the standard to the with rubber cushion stopper or metal stopper

LCX - 25 - S 2 - S02

Bore size
(Item Ⓐ on page 177)

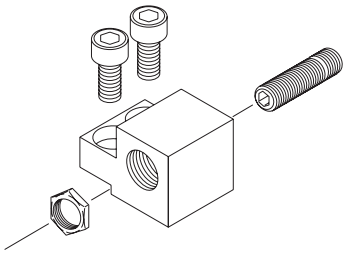

Ⓐ Stopper	
S	Cushion stopper
M	Metal stopper

Ⓑ Stopper mounting position	
1	Stopper position (1) or for (4)
2	Stopper position (2) or for (3)

Ⓒ Stroke adjusting amount	
Blank	Adjustable stroke range 10 mm
S02	Adjustable stroke range 20 mm

(Unit: g)

Model No.				Weight
LCX	25	S1	Blank	70
		S2	S02	80
	32	M1	Blank	70
		M2	S02	80

How to order discrete rubber cushion stopper

- Hexagon socket set screw with urethane
- Use this when changing the adjustable stroke range or when using custom stroke length

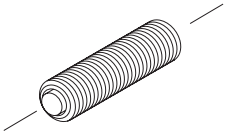

LCX - 25 - S02

Bore size
(Item Ⓐ on page 177)

Ⓐ Adjustable stroke range	
S01	Single side 10 mm (standard)
S02	Single side 20 mm

(Unit: g)

Model No.			Weight
LCX	25	S01	30
	32	S02	40

How to order discrete metal stopper

- Use when changing the adjustable stroke range or when using a custom stroke length

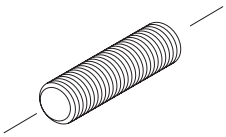

LCX - 25 - M02

Bore size
(Item Ⓐ on page 177)

Ⓐ Adjustable stroke range	
M01	Single side 10 mm (standard)
M02	Single side 20 mm

(Unit: g)

Model No.			Weight
LCX	25	M01	30
	32	M02	40

How to order discrete stopper block

● Use this when changing from the standard to the with rubber cushion stopper or metal stopper

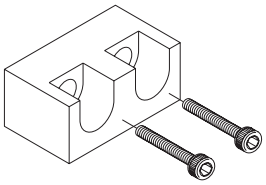

LCX - 25 - SB1 T

Bore size
(Item Ⓐ on page 177)

Ⓐ Stopper block	
SB1	For 30, 50 mm stroke length
SB2	For 10, 20, 40 mm stroke length

Ⓑ Material	
Blank	Stopper block material: Rolled steel
T	Stopper block material: steel (nitriding)

(Unit: g)

Model No.			Weight
LCX	25	SB1 (T)	80
	32	SB2 (T)	100

How to order positioning bolt

● A hexagon socket head cap screw for positioning
● Enables assembling of the crossed unit and two-stage unit without adjusting the position

LCX - 25 - J

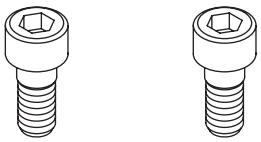

(2 pieces/set)

(Unit: g)

Model No.			Weight
LCX	25	J	10

* Weight per set (2 pieces)

How to order discrete cylinder

LCX - CYL - 25 - 40 - P72

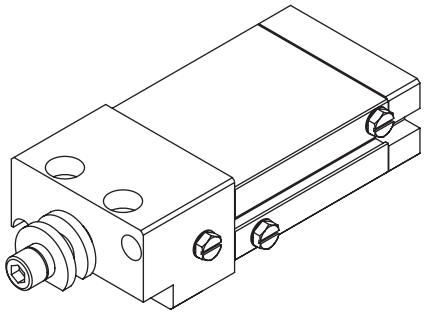

Bore size
(Item Ⓐ on page 177)

Stroke length
(Item Ⓑ on page 177)

Ⓐ Variation	
P72	Clean room specifications (exhaust treatment)
P73	Clean room specifications (vacuum treatment)

Dimensions

● Double acting/clean room specifications LCX-25, 32-P7*

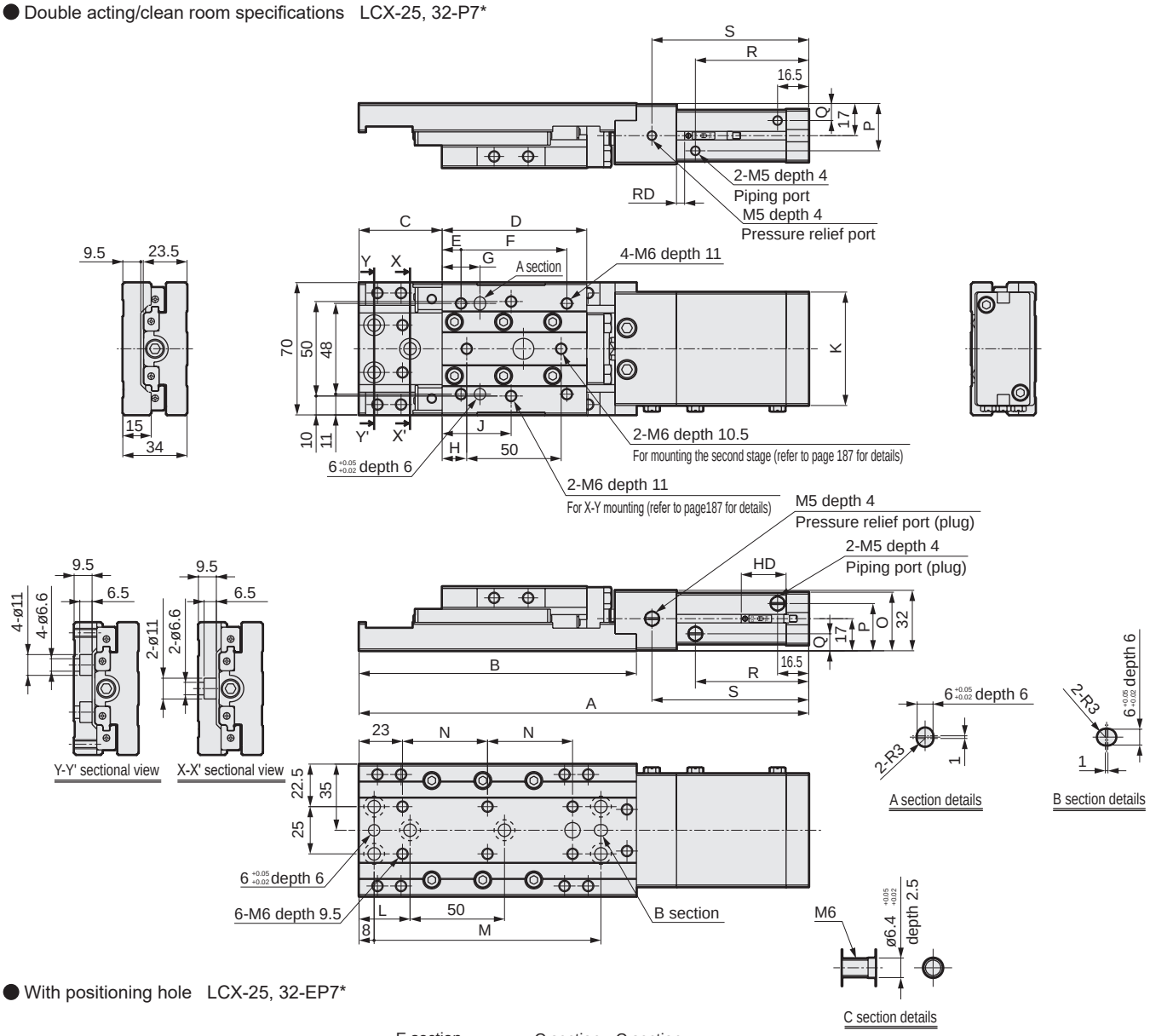

● With positioning hole LCX-25, 32-EP7*

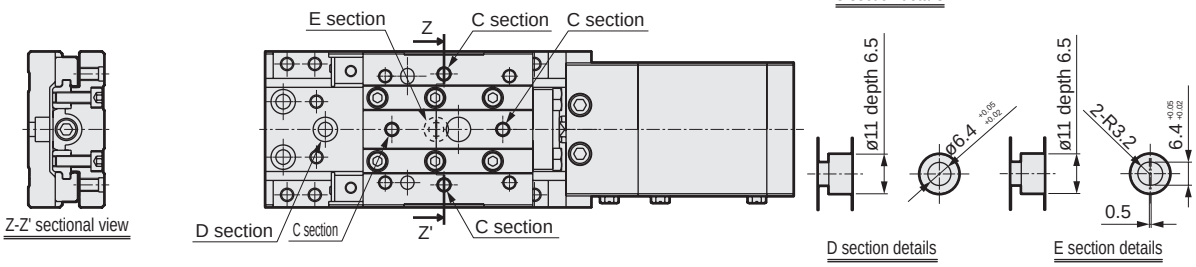

Bore size	Stroke length	A	B	C	D	E	F	G	H	J	K	L	M	N	O	P	Q	R	S	RD T0* T2* T5* T3*	RD T2W* T3W*	HD T0* T2* T5* T3*	HD T2W* T3W*
ø25	10	218	147	34	76.5	10	56	20	13	36.5	50	27	120	45	29.5	24.5	9.5	40	63	5	6.5	23.5	21.5
	20	228		39														50	73				
	30	238		44														60	83				
	40	268	167	49	86.5	15	64	30	23	46.5		41	140	55				70	93				
	50	278		54														80	103				
ø32	10	218	147	34	76.5	10	56	20	13	36.5	60	27	120	45	31	25	9	40	63				
	20	228		39														50	73				
	30	238		44														60	83				
	40	268	167	49	86.5	15	64	30	23	46.5		41	140	55				70	93				
	50	278		54														80	103				

MEMO

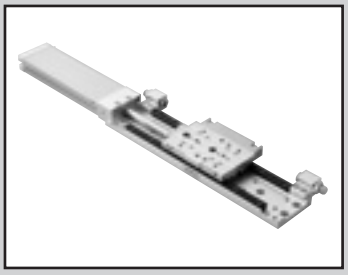

Linear slide cylinder double acting/single rod clean room specifications/long stroke length

LCX-*L Series

● Bore size: ø25/ø32

JIS symbol

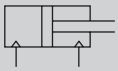

RoHS CAD

Specifications

Descriptions	LCX-*L-P7*	
Bore size mm	ø25	ø32
Actuation	Double acting	
Working fluid	Compressed air	
Max. working pressure MPa	0.7	
Min. working pressure MPa	0.15	
Proof pressure MPa	1.05	
Ambient temperature °C	-10 to 60 (no freezing) (*1)	
Port size	M5	
Port size (relief port)	M5	
Stroke tolerance mm	$^{+2.0}_{0}$ (*2)	
Working piston speed mm/s	20 to 500	
Cushion	With rubber cushion	
Lubrication	Not available	
Allowable energy absorption J	Refer to table 3 on page 189.	

*1: Contact CKD if the use environment is always cold (5°C or less) or hot (40°C and over).
*2: Note that there will be a slight gap between the end plate and floating bush if no stopper is attached.
*3: Keep within 20 to 200 mm/s when using a metal stopper.

Structure and material restriction

	Structure	Model No.
P7 Series	Exhaust treatment	P72
	Vacuum treatment	P73

Stroke length

Bore size (mm)	Standard stroke length (mm)
ø25	75, 100, 125, 150
ø32	75, 100, 125, 150

Note: The stroke length other than above is not available.

Theoretical thrust table

Refer to page 188.

Switch specifications

● 1-color/2-color display

Descriptions	Reed 2-wire				Proximity 2-wire		Proximity 3-wire		
	T0H/T0V		T5H/T5V		T2H/T2V	T2WH/T2WV	T3H/T3V	T3PH/T3PV	T3WH/T3WV
Applications	Programmable controller, relay		Programmable controller, relay IC circuit (without indicator lamp), serial connection		Programmable controller		Programmable controller, relay		
Output method	-		-		-		NPN output	PNP output	NPN output
Power supply voltage	-		-		-		10 to 28 VDC		
Load voltage	12/24 VDC	110 VAC	5/12/24 VDC	110 VAC	10 to 30 VDC	24 VDC ±10%	30 VDC or less		
Load current	5 to 50 mA	7 to 20 mA	50 mA or less	20 mA or less	5 to 20 mA (*2)		100 mA or less		50 mA or less
Indicator lamp	LED (Lit when ON)		Without indicator lamp		LED (Lit when ON)	Red/green LED (Lit when ON)	LED (Lit when ON)	Yellow LED (Lit when ON)	Red/green LED (Lit when ON)
Leakage current	0 mA				1 mA or less		10 μA or less		
Weight g	1 m: 18 3 m: 49 5 m: 80				1 m: 18 3 m: 49 5 m: 80		1 m: 18 3 m: 49 5 m: 80		

*1: Refer to page 309 for detailed switch specifications and dimensions.
*2: The maximum load current of 20 mA is for 25°C. The current will be lower than 20 mA when operating ambient temperature around the switch is higher than 25˚C. (5 to 10 mA at 60°C)

Cylinder weight

● Clean room specifications (Unit: g)

Bore size (mm)	Basic Stroke length (mm)			
	75	100	125	150
ø25	1,530	1,670	1,820	1,960
ø32	1,660	1,810	1,960	2,110

● Weight of variation/option (stopper) (Unit: g)

Bore size (mm)	Option/stopper code			
	S1 to S4	M1 to M4	S5/S6	M5/M6
ø25	320		400	
ø32				

How to order

Without switch (Magnet for switch incorporated)

LCX - 25 L - 100 ——— S5 P72

With switch (Magnet for switch incorporated)

LCX - 25 L - 100 - T2H* - R - S1T P72

Model No.

Ⓐ Bore size

Ⓑ Stroke length

Ⓒ Switch model No. *8

Ⓓ Switch quantity

Ⓔ Stopper

Ⓕ Clean room specifications

Code	Content
Ⓐ Bore size	
25	ø25
32	ø32

Ⓑ Stroke length (mm)	
75	75
100	100
125	125
150	150

Ⓒ Switch model No.

Lead wire straight	Lead wire L-shaped	Contact	Voltage AC	Voltage DC	Display	Lead wire
T0H*	**T0V***	Reed	●	●	1-color display	2 wires
T5H*	**T5V***		●	●	Without indicator lamp	
T2H*	**T2V***	Proximity		●	1-color display	2 wires
T3H*	**T3V***			●		3 wires
T3PH*	**T3PV***				1-color display (PNP output)	3 wires
T2WH*	**T2WV***			●	2-color display	2 wires
T3WH*	**T3WV***			●		3 wires

*** Lead wire length**	
Blank	1 m (standard)
3	3 m (option)
5	5 m (option)

Ⓓ Switch quantity	
R	1 (on rod end)
H	1 (on head end)
D	2

Ⓔ Stopper		
Blank	Without stopper	
S Cushion cushion stopper		***1, *4**
S1*	Stopper position (1) (can be changed to (4))	Stopper mounting position
S2*	Stopper position (2) (can be changed to (3))	
S3*	Stopper position (3) (can be changed to (2))	
S4*	Stopper position (4) (can be changed to (1))	
S5*	Stopper position (1), (3)	
S6*	Stopper position (2), (4)	
M Metal stopper		***1, *3, *4, *5**
M1*	Stopper position (1) (can be changed to (4))	Stopper mounting position
M2*	Stopper position (2) (can be changed to (3))	
M3*	Stopper position (3) (can be changed to (2))	
M4*	Stopper position (4) (can be changed to (1))	
M5*	Stopper position (1), (3)	
M6*	Stopper position (2), (4)	
*** Part**		
Blank	Stopper block material: Rolled steel	
T	Stopper block material: Alloy steel (nitriding)	*2

Ⓕ Clean room specifications	
	Structure
P72	Exhaust treatment
P73	Vacuum treatment

⚠ Precautions for model No. selection

*1: To change the adjustable stroke length, use a discrete rubber cushion stopper or metal stopper on page 184.
*2: Can be selected for the type with stopper only.
*3: The alloy steel stopper block (code: T) is recommended for a metal stopper.
*4: Combination of the rubber cushion stopper and metal stopper is custom order.
*5: Keep within 20 to 200 mm/s when using a metal stopper.
*6: Refer to page 185 for a discrete cylinder model No.
*7: The long stroke length has a positioning hole as standard.
*8: Be careful of the lead wire direction when designing the 30 mm or less stroke length of axial lead wire and the 20 mm stroke length of radial lead wire since a switch is installed in each groove of the body.

[Example of model No.]

LCX-25L-100-T2H-R-S1TP72

Model No.: Linear slide cylinder Double acting/ single rod (clean room specifications) LCX-P7*

Ⓐ Bore size : ø25
Ⓑ Stroke length : 100 mm
Ⓒ Switch model No. : Proximity/2 wires/ Lead wire 1 m Lead wire straight
Ⓓ Switch quantity : 1 (on rod end)
Ⓔ Other options : Rubber cushion stopper Stopper position (1) Material, alloy steel (nitriding)
Ⓕ Clean room specifications : Exhaust treatment

● Stopper position

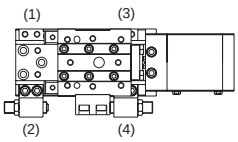

How to order switch

SW - T2H3

Switch model No.
(Item Ⓒ on page 183)

How to order a stopper set

- A set of a stopper and rubber cushion stopper or metal stopper
- Use this when changing from the standard to the with rubber cushion stopper or metal stopper

LCX - 25 - S 2 - S02

Bore size
(Item Ⓐ on page 183)

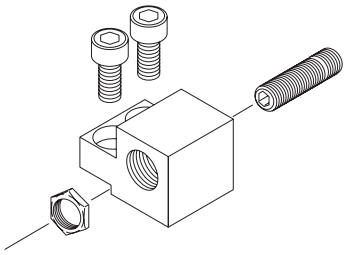

Ⓐ Stopper	
S	Cushion stopper
M	Metal stopper

Ⓑ Stopper mounting position	
1	Stopper position (1) or for (4)
2	Stopper position (2) or for (3)

Ⓒ Stroke adjusting amount (*1)	
Blank	Adjustable stroke range 10 mm
S02	Adjustable stroke range 20 mm

(Unit: g)

Model No.				Weight
LCX	25	S1	Blank	70
		S2	S02	80
	32	M1	Blank	70
		M2	S02	80

How to order discrete rubber cushion stopper

- Hexagon socket set screw with urethane
- Use it when changing the adjustable stroke range or when using custom stroke length

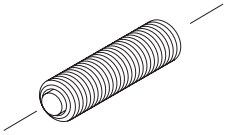

LCX - 25 - S02

Bore size
(Item Ⓐ on page 183)

Ⓐ Adjustable stroke range	
S01	Single side 10 mm (standard)
S02	Single side 20 mm

(Unit: g)

Model No.			Weight
LCX	25	S01	30
	32	S02	40

How to order discrete metal stopper

- Use this when changing the adjustable stroke range or when using custom stroke length

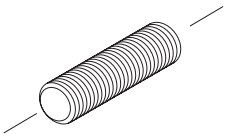

LCX - 25 - M02

Bore size
(Item Ⓐ on page 183)

Ⓐ Adjustable stroke range	
M01	Single side 10 mm (standard)
M02	Single side 20 mm

(Unit: g)

Model No.			Weight
LCX	25	M01	30
	32	M02	40

How to order discrete stopper block

● Use it when changing from the standard to the with rubber cushion stopper or metal stopper

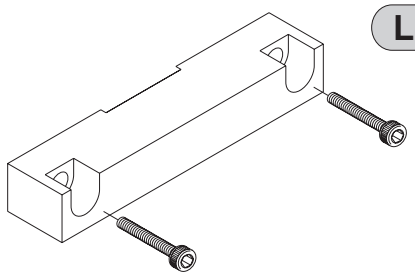

LCX - 25 L - SB3 T

Bore size
(Item Ⓐ on page 183)

Ⓐ Material	
Blank	Stopper block material: Rolled steel
T	Stopper block material: Alloy steel (nitriding)

(Unit: g)

Model No.			Weight
LCX	25L 32L	SB3 (T)	250

How to order positioning bolt

● A hexagon socket head cap screw for positioning
● Enables assembling of the crossed unit and two-stage unit without adjusting the position

LCX - 25 - J

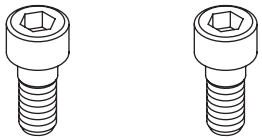

(2 pieces/set)

(Unit: g)

Model No.			Weight
LCX	25	J	10

* Weight per set (2 pieces)

How to order discrete cylinder

LCX - CYL - 25 L - 100 - P72

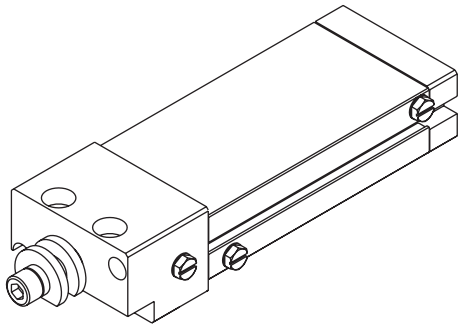

Bore size
(Item Ⓐ on page 183)

Stroke length
(Item Ⓑ on page 183)

Ⓐ Variation	
P72	Clean room specifications (exhaust treatment)
P73	Clean room specifications (vacuum treatment)

SCPD3
SCM
SSD2
MDC2
SMG
LCM
LCR
LCG
LCX
STM
STG
STR2
MRL2
GRC
Cylinder switch
MN3E MN4E
4GA/B
M4GA/B
MN4GA/B
F.R (module unit)
Clean F.R
Precision R
Press gauge Diff. press gauge
Electro-pneumatic R
Speed controller
Auxiliary valve
Fitting/ tube
Clean air unit
Pressure sensor
Flow rate sensor
Valve for air blow
Ending

Dimensions

● Double acting/single rod clean room specifications/long stroke length LCX-*L-P7*

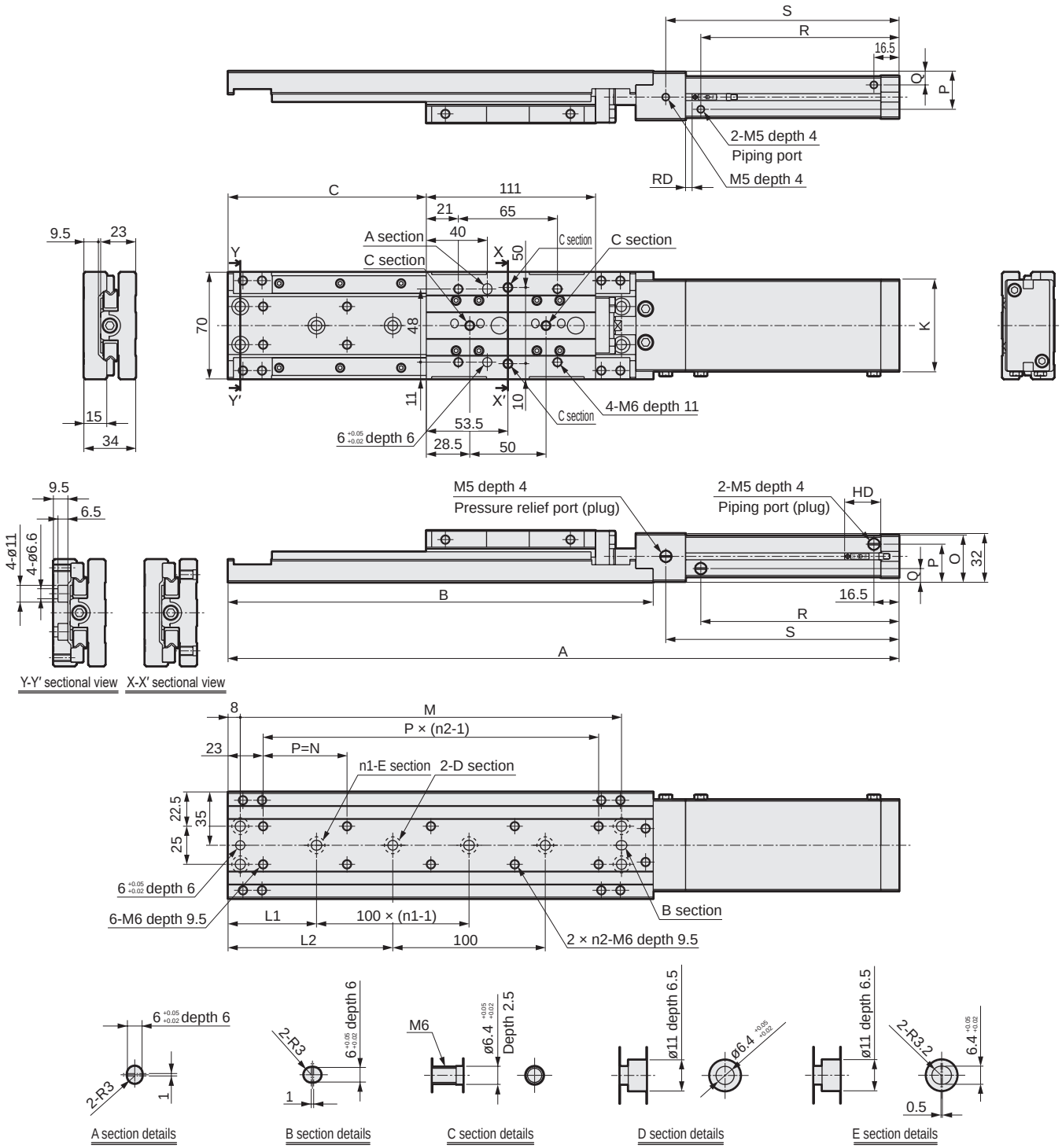

Bore size	Stroke length	A	B	C	K	L1	L2	n1	n2	M	N	O	P	Q	R	S	RD			HD		
																	T0* T5*	T2* T3*	T2W* T3W*	T0* T5*	T2* T3*	T2W* T3W*
ø25	75	390	254	105	50	45.5	95.5	2	5	225	49	29.5	24.5	9.5	105	128	5		6.5	23.5		21.5
	100	440	279	130		58	108	2	5	250	55				130	153						
	125	490	304	155		45.5	95.5	3	6	275	49				155	178						
	150	540	329	180		58	108	3	6	300	54				180	203						
ø32	75	390	254	105	60	45.5	95.5	2	5	225	49	31	25	9	105	128						
	100	440	279	130		58	108	2	5	250	55				130	153						
	125	490	304	155		45.5	95.5	3	6	275	49				155	178						
	150	540	329	180		58	108	3	6	300	54				180	203						

Unit example

● Crossed unit

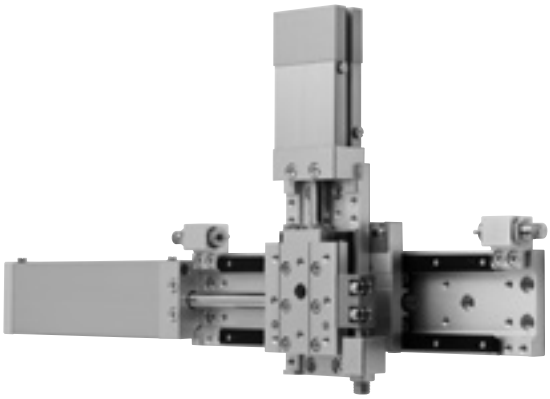

How to assemble

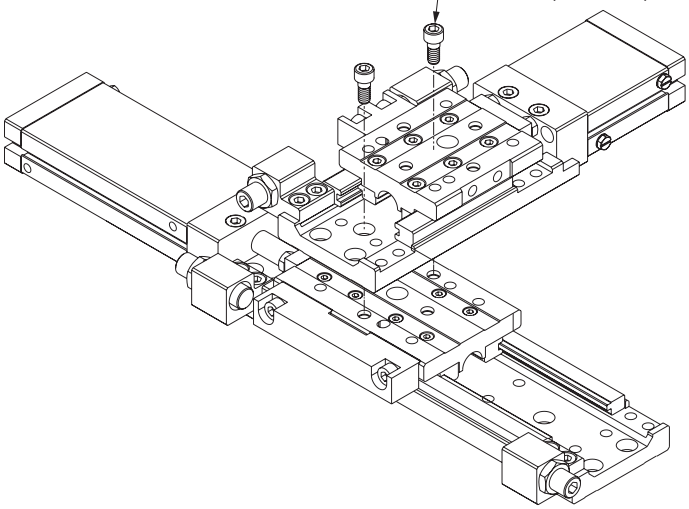

● 2-stage unit

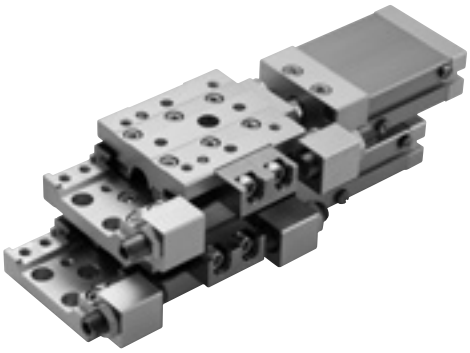

How to assemble

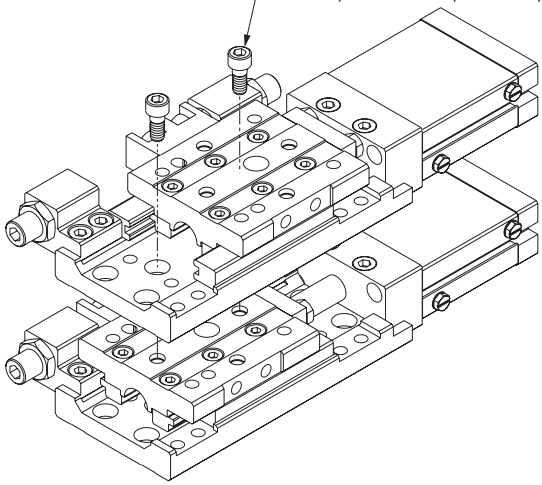

[Fastening with positioning bolt]

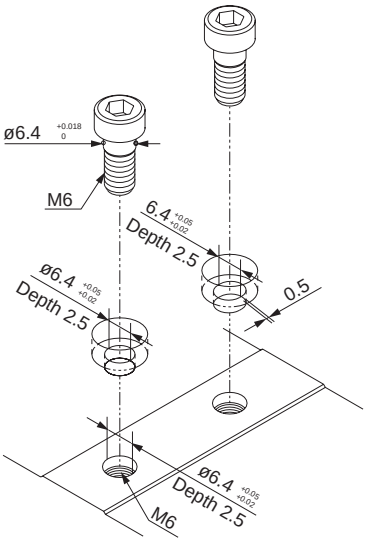

* The picture shows the standard product.

SCPD3
SCM
SSD2
MDC2
SMG
LCM
LCR
LCG
LCX
STM
STG
STR2
MRL2
GRC
Cylinder switch
MN3E MN4E
4GA/B
M4GA/B
MN4GA/B
F.R (module unit)
Clean F.R
Precision R
Press gauge Diff. press gauge
Electro-pneumatic R
Speed controller
Auxiliary valve
Fitting/ tube
Clean air unit
Pressure sensor
Flow rate sensor
Valve for air blow
Ending

STEP-1

Calculate the load factor and decide the bore size.

$$\alpha = \frac{F_0}{F} \times 100\ (\%)$$

α : Load factor

F_0 : Force (N) required to move the workpiece

F : Cylinder theoretical thrust (N) (Table 1)

For horizontal operation	For vertical operation
$F_0 = F_W$	$F_0 = W + F_W$
FW: W × 0.2Note (N)	
W: Load (N)	

Note : coefficient of friction

(Table 1) Theoretical thrust table (Unit: N)

Bore size	Operating direction	Working pressure MPa						
		0.15	0.2	0.3	0.4	0.5	0.6	0.7
ø25 equiv.	PUSH	74	99	148	197	246	296	345
	PULL	57	76	114	152	190	228	266
ø32 equiv.	PUSH	116	155	233	310	388	466	543
	PULL	99	133	199	265	332	398	464

(Table 2) Rough indication of load factor

Working pressure MPa	Load factor (%)
0.2 to 0.3	α ≦ 40
0.3 to 0.6	α ≦ 50
0.6 to 0.7	α ≦ 60

STEP-2

Obtain the stroke end speed (Vm) and G coefficient.

Obtain the stroke end speed (Vm) and G coefficient from the average speed (Va) and load factor obtained in STEP-1.

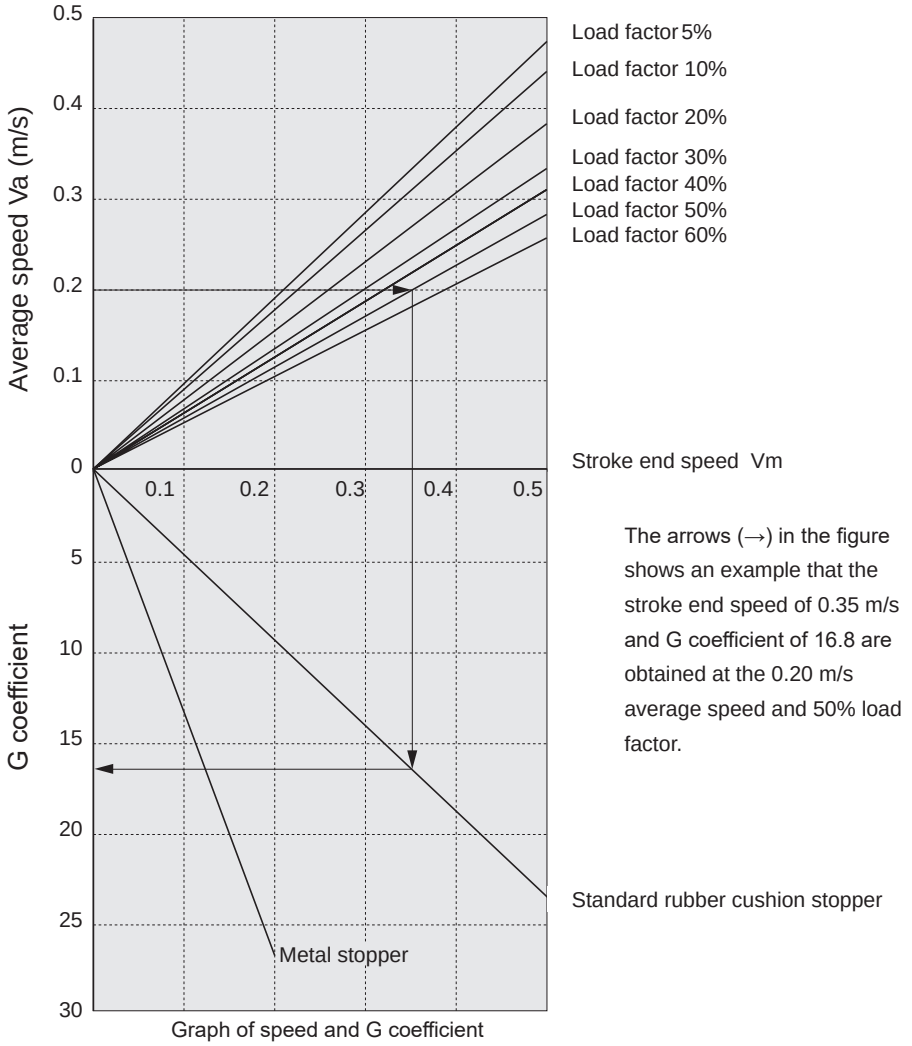

The arrows (→) in the figure shows an example that the stroke end speed of 0.35 m/s and G coefficient of 16.8 are obtained at the 0.20 m/s average speed and 50% load factor.

Graph of speed and G coefficient

G coefficient= ☐

STEP-3

Check the allowable absorbed energy.

$$E = \frac{1}{2} \times (m + m_\alpha) \times Vm^2$$

E	: Kinetic energy at workpiece end (J)
m	: Load weight (kg) $(m \fallingdotseq \frac{W\,(N)}{9.8})$
m_α	: Table weight (from Table 4)
Vm	: Stroke end speed (m/s)
E max	: Max. allowable value of E_0 (from Table 3)

Confirm E ≤ E max.

(Table 3) LCX allowable absorbed energy value (E_0)

Bore size	Standard (J)	Cushion stopper (J)	Metal stopper (J)
ø25	0.34	0.14	0.07
ø32			

(Table 4) Table weight (Unit: kg)

Bore size	Stroke length (mm)								
	10	20	30	40	50	75	100	125	150
ø25	0.030			0.035					
ø32									

STEP-4

Obtain M'T (resultant moment at rest).

Calculate the load (moment) and the moment of impact occurring at the stroke end and obtain M'T (resultant moment at rest).

● Vertical load: W' (N)

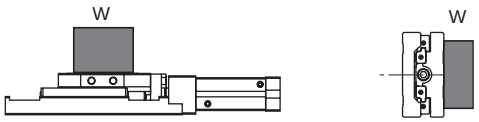

W' = W

● Bending moment: M1' (N·m)

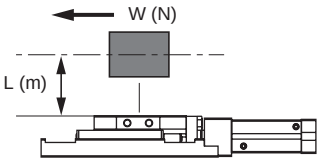

M1'= L × W

● Radial moment: M2' (N·m)

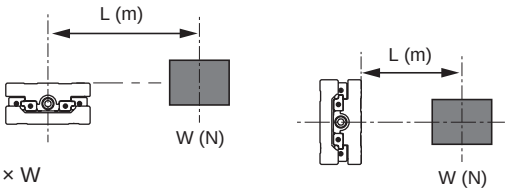

M2'= L × W

● Torsion moment: M3' (N·m)

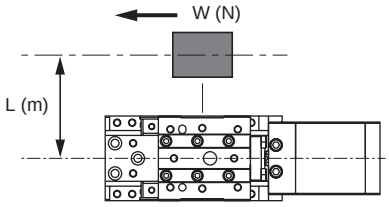

M3'= L × W

W' = ☐ (N)

M1' × G = ☐ (N·m)

M2' = ☐ (N·m)

M3' × G = ☐ (N·m)

$$M'_T = \frac{W'}{W'max} + \frac{M1' \times G}{M1'max} + \frac{M2'}{M2'max} + \frac{M3' \times G}{M3'max} = \square$$

M'_T	: Synthesis of moment
G	: G coefficient
W'max	: Maximum allowable value of W' (from Table 5)
M1'max	: Max. allowable value of M1' (from Table 5)
M2'max	: Max. allowable value of M2' (from Table 5)
M3'max	: Max. allowable value of M3' (from Table 5)

(Table 5) Allowable static load

Bore size	Stroke length	Vertical load W'max (N)	Bending moment M1'max (N·m)	Radial moment M2'max (N·m)	Torsion moment M3'max (N·m)
ø25	10, 20, 30, 40, 50	670	52	110	52
ø32					
ø25	75, 100, 125, 150	970	128	116	128
ø32					

Confirm M'_T ≤ 1.

SCPD3
SCM
SSD2
MDC2
SMG
LCM
LCR
LCG
LCX
STM
STG
STR2
MRL2
GRC
Cylinder switch
MN3E MN4E
4GA/B
M4GA/B
MN4GA/B
F.R (module unit)
Clean F.R
Precision R
Press gauge Diff. press gauge
Electro-pneumatic R
Speed controller
Auxiliary valve
Fitting/ tube
Clean air unit
Pressure sensor
Flow rate sensor
Valve for air blow
Ending

STEP-5

Obtain M_T (resultant moment during movement) (Note that it differs from that obtained in STEP-4.)

● Vertical load: W (N)

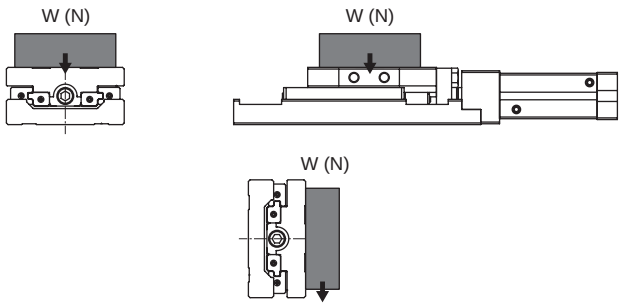

● Bending moment: M1 (N·m)

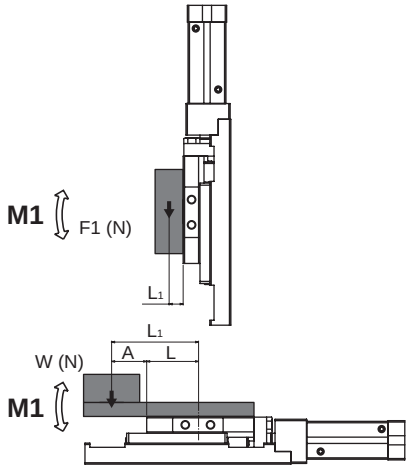

$M1 = F1 \times L_1$

$M1 = W \times L_1$

$L_1 = A + L$

L is a value in the table below.

● Radial moment: M2 (N·m)

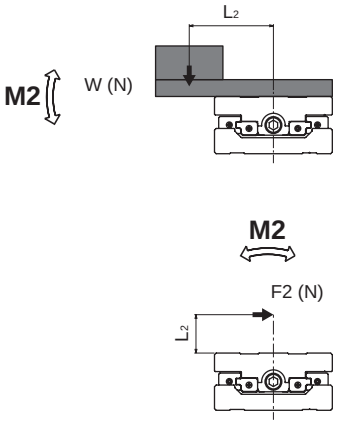

$M2 = W \times L_2$

$M2 = F2 \times L_2$

● Torsion moment: M3 (N·m)

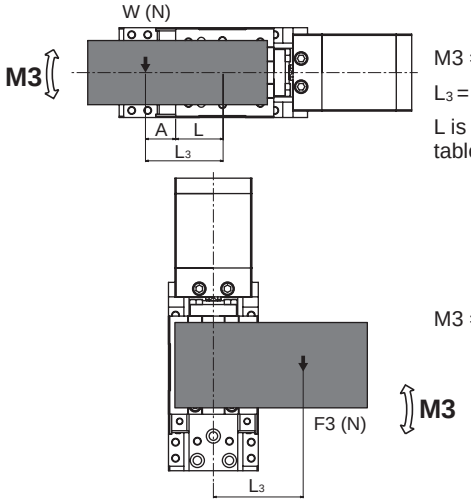

$M3 = W \times L_3$

$L_3 = A + L$

L is a value in the table below.

$M3 = F3 \times L_3$

L (length from the table end to the center of the bearing) Unit (m)

Bore size	Stroke length								
	10	20	30	40	50	75	100	125	150
ø25	0.037			0.042		0.0535			
ø32									

W = W = ☐ (N)

M1 = M1 = ☐ (N·m)

M2 = M2 = ☐ (N·m)

M3 = M3 = ☐ (N·m)

$$M_T = \frac{W}{Wmax} + \frac{M1}{M1max} + \frac{M2}{M2max} + \frac{M3}{M3max} = \square$$

M_T : Synthesis of moment

Wmax : Maximum allowable value of W (from Table 7)

M1max : Maximum allowable value of M1 (from Table 7)

M2max : Maximum allowable value of M2 (from Table 7)

M3max : Maximum allowable value of M3 (from Table 7)

(Table 7) Allowable moving load

Bore size	Stroke length	Vertical load Wmax (N)	Bending moment M1max (N·m)	Radial moment M2max (N·m)	Twist moment M3max (N·m)
ø25	10, 20, 30, 40, 50	97	7	15	7
ø32					
ø25	75, 100, 125, 150	130	17	16.5	17
ø32					

Can be used when $M_T \leq 1$ is satisfied.

Displacement at point A

[Displacement of table due to M1, M2 and M3 moments]

M1 moment: Displacement at the table end when the load (F1) is applied to the table end
M2 moment: Displacement at the table end (point A) when the load (F2) is applied to the point 100 mm away from the center of the cylinder
M3 moment: Displacement angle of the table when the rotation moment (M3) is applied to the cylinder

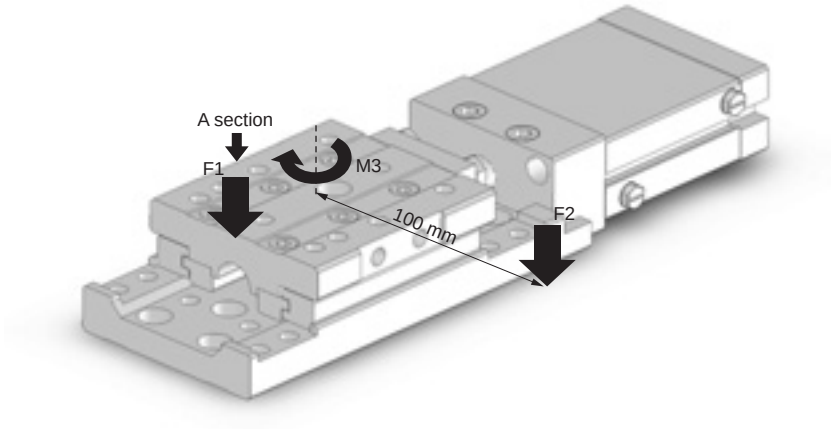

Table deflection of M1 moment

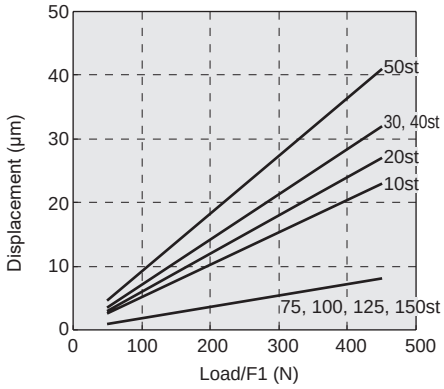

Table deflection of M2 moment

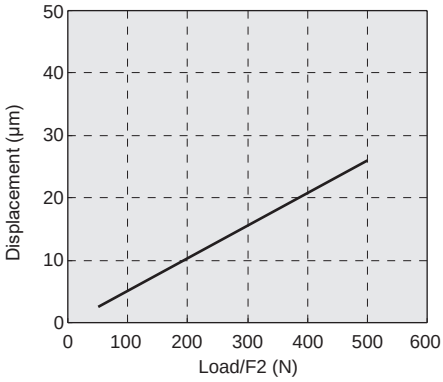

Table deflection of M3 moment

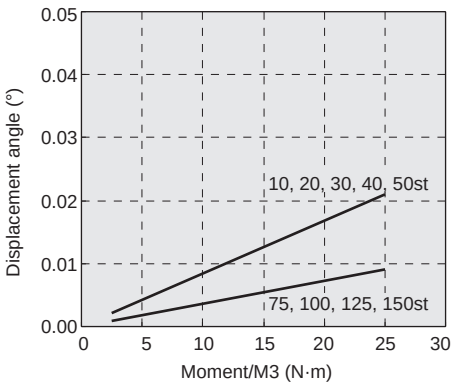

SCPD3
SCM
SSD2
MDC2
SMG
LCM
LCR
LCG
LCX
STM
STG
STR2
MRL2
GRC
Cylinder switch
MN3E MN4E
4GA/B
M4GA/B
MN4GA/B
F.R (module unit)
Clean F.R
Precision R
Press gauge Diff. press gauge
Electro-pneumatic R
Speed controller
Auxiliary valve
Fitting/ tube
Clean air unit
Pressure sensor
Flow rate sensor
Valve for air blow
Ending

Selection guide: selection example (1)

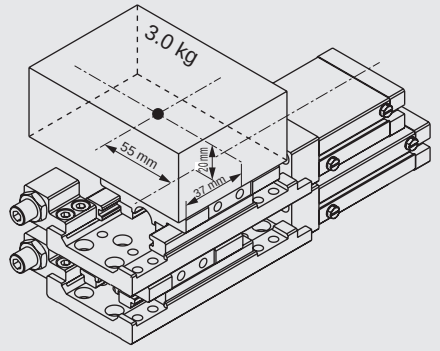

[Operation condition]

Model used (upper): LCX-25-30-M6 (product weight: 1,270 (g))
(lower): LCX-32-30-S6 (product weight: 1,440 (g))
Pressure: 0.5 (MPa)
Weight of workpiece: 3.0 (kg)
Operating direction: Horizontal
Average speed (upper): 100 (mm/s)
(lower): 230 (mm/s)
Shape of workpiece: As shown on the left

STEP-1 Check of the load factor and decision of the bore size (For details on how to calculate, refer to page 188.)

Formula

$$\alpha = \frac{F_0}{F} \times 100\ (\%)$$

α : Load factor
F_0 : Force (N) required to move the workpiece
F : Cylinder theoretical thrust (N)

Selection example

[Cylinder on upside]

$$\alpha 1 = \frac{(3.0 \times 9.8) \times 0.2}{190} \times 100 = 3.1\%$$

[Cylinder on downside]

$$\alpha 2 = \frac{((3.0 + 1.27 + 0.01) \times 9.8) \times 0.2}{332} \times 100 = 2.5\%$$

Can be used since the estimated load factor at 0.5 MPa is
Can be used as "α ≦ 50"

STEP-2 Check of the stroke end speed and G factor (For details on how to calculate, refer to page 188.)

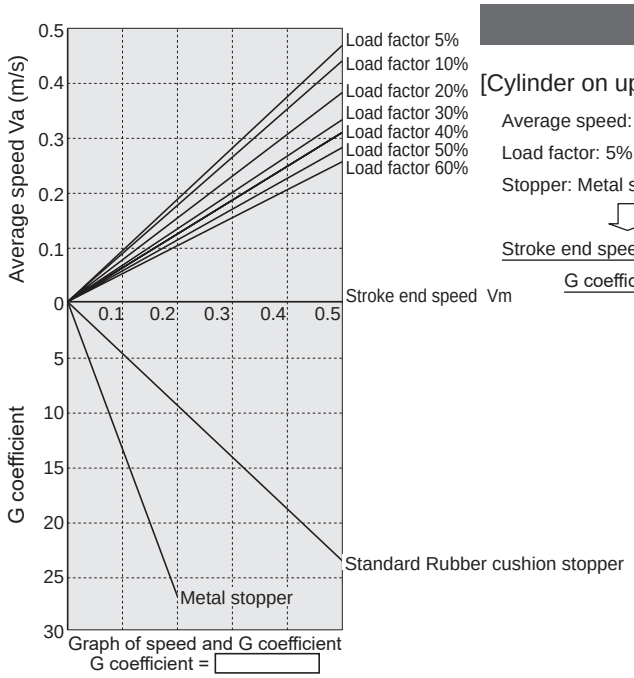

Graph of speed and G coefficient
G coefficient = [ ]

Selection example

[Cylinder on upside]

Average speed: 100 mm/s
Load factor: 5% or less (3.1%)
Stopper: Metal stopper

⇩

Stroke end speed: 110 mm/s
G coefficient: 14

[Cylinder on downside]

Average speed: 230 mm/s
Load factor: 5% or less (2.5%)
Stopper: Rubber cushion stopper

⇩

Stroke end speed: 240 mm/s
G coefficient: 12

STEP-3 Check of the allowable absorbed energy (For details on how to calculate, refer to page 189.)

Formula

$$E = \frac{1}{2} \times (m + m_\alpha) \times Vm^2$$

E : Kinetic energy at workpiece end (J)
m : Load weight (kg)
m_α : Table weight (kg)
Vm : Stroke end speed (m/s)

Selection example

[Cylinder on upside]

$$E = \frac{1}{2} \times (3.0 + 0.03) \times 0.11^2 = 0.02\ (J)$$

Can be used since the allowable absorbed energy of the metal stopper is "0.07J"

[Cylinder on downside]

$$E = \frac{1}{2} \times (3.0 + 1.27 + 0.01 + 0.035) \times 0.24^2 = 0.124\ (J)$$

Can be used since the allowable absorbed energy of the rubber cushion stopper is "0.14J"

STEP-4 Check of the allowable static load (For details on how to calculate, refer to page 189.)

Formula

● Vertical load

$W' = W$

● Bending moment: M1' (N·m)

$M1' = L_1 \times W$

● Radial moment: M2' (N·m)

$M2' = L_2 \times W$

● Torsion moment: M3' (N·m)

$M3' = L_3 \times W$

◎ Synthesis of moment

$$M'_T = \frac{W'}{W'max} + \frac{M1' \times G}{M1'max} + \frac{M2'}{M2'max} + \frac{M3' \times G}{M3'max}$$

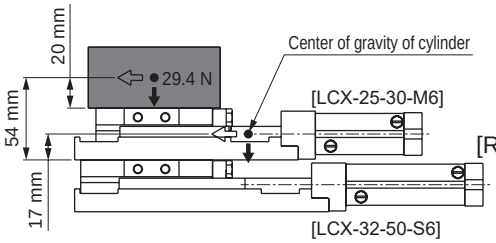

Selection example

[Calculating load and moment]

[Cylinder on upside]

$W' = 3.0 \times 9.8 = 29.4$ (N)

$M1' = 0.02 \times 29.4 = 0.6$ (N·m)

$M2' = 0.055 \times 29.4 = 1.6$ (N·m)

$M3' = 0.055 \times 29.4 = 1.6$ (N·m)

[Cylinder on downside]

$W' = 3.0 \times 9.8 + 1.27 \times 9.8$

$= 41.8$ (N)

$M1' = 0.054 \times 29.4$

$\underline{+ 0.017 \times 1.27 \times 9.8}$

$= 1.8$ (N·m)

(Omit the underlined part if the cylinder on upside does not work as a moment of impact.)

$M2' = 0.055 \times 29.4 = 1.6$ (N·m)

$M3' = 0.055 \times 29.4 = 1.6$ (N·m)

[Resultant moment when the cylinder on upside operates]

Stroke end speed: 110 mm/s, G factor: 14

[Cylinder on upside]

$$M'_T = \frac{29.4}{670} + \frac{0.6 \times 14}{52} + \frac{1.6}{110} + \frac{1.6 \times 14}{52} = 0.7$$

Can be used since the resultant moment (M'T) is "1 or less"

[Cylinder on downside]

$$M'_T = \frac{41.8}{670} + \frac{1.6 \times 14}{52} + \frac{1.6}{110} + \frac{1.6 \times 14}{52} = 1.0$$

Can be used since the resultant moment (M'T) is "1 or less"

[Resultant moment when the cylinder on downside operates]

Stroke end speed: 240 mm/s, G factor: 12

[Cylinder on upside]

$$M'_T = \frac{29.4}{670} + \frac{0.6 \times 12}{52} + \frac{1.6}{110} + \frac{1.6 \times 12}{52} = 0.6$$

Can be used since the resultant moment (M'T) is "1 or less"

[Cylinder on downside]

$$M'_T = \frac{41.8}{670} + \frac{1.8 \times 12}{52} + \frac{1.6}{110} + \frac{1.6 \times 12}{52} = 0.9$$

Can be used since the resultant moment (M'T) is "1 or less"

STEP-5 Check of the allowable dynamic load (For details on how to calculate, refer to page 190.)

Formula

● Vertical load

$W = W$

● Bending moment: M1 (N·m)

$M1 = L_1 \times W$

● Radial moment: M2 (N·m)

$M2 = L_2 \times W$

● Torsion moment: M3 (N·m)

$M3 = L_3 \times W$

◎ Synthesis of moment

$$M_T = \frac{W}{Wmax} + \frac{M1}{M1max} + \frac{M2}{M2max} + \frac{M3}{M3max}$$

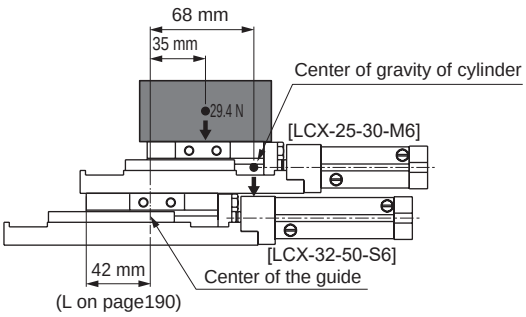

Selection example

[Cylinder on upside]

$W = 3.0 \times 9.8 = 29.4$ (N)

$M1 = 0$ (N·m)

$M2 = 0.055 \times 29.4 = 1.6$ (N·m)

$M3 = 0$ (N·m)

$$M_T = \frac{29.4}{97} + \frac{0}{7} + \frac{1.6}{15} + \frac{0}{7} = 0.4$$

Can be used since the resultant moment (M'T) is "1 or less"

[Cylinder on downside]

$W = 3.0 \times 9.8 + 1.27 \times 9.8$

$= 41.8$ (N)

$M1 = 0.035 \times 29.4 + 0.068 \times 1.27 \times 9.8$

$= 1.9$ (N·m)

(Add the value of the cylinder on upside since it works as a moment. Substitute the center of the external dimensions for the center of gravity of the cylinder.)

$M2 = 0.055 \times 29.4 = 1.6$ (N·m)

$M3 = 0$ (N·m)

$$M_T = \frac{41.8}{97} + \frac{1.9}{7} + \frac{1.6}{15} + \frac{0}{7} = 0.8$$

Can be used since the resultant moment (M'T) is "1 or less"

Selection guide: selection example (2)

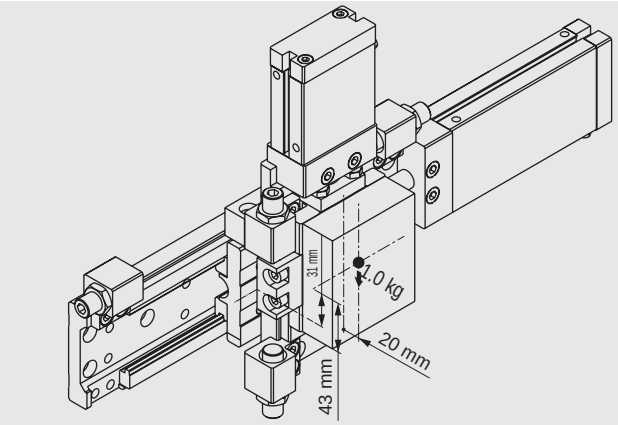

[Operation condition]

Model used (X-axis): LCX-32-150-A6 (product weight: 2,450 (g))
(Z-axis): LCX-32-30-S6 (product weight: 1,440 (g))
Pressure: 0.5 (MPa)
Weight of workpiece: 1.0 (kg)
Operating direction: Horizontal + vertical
Average speed (X-axis) : 300 (mm/s)
(Z-axis): 50 (mm/s)
Shape of workpiece: As shown on the left

STEP-1 Check of the load factor and decision of the bore size (For details on how to calculate, refer to page 188.)

Formula

$$\alpha = \frac{F_0}{F} \times 100\ (\%)$$

α : Load factor
F_0 : Force (N) required to move the workpiece
F : Cylinder theoretical thrust (N)

Selection example

[X-axis cylinder]

$$\alpha 1 = \frac{((1.0 + 1.29 + 0.01) \times 9.8) \times 0.2}{332} \times 100 = 1.4\%$$

[Z axis cylinder]

$$\alpha 2 = \frac{(1.0 \times 9.8) + 0.2 \times (1.0 \times 9.8)}{332} \times 100 = 3.5\%$$

Can be used since the estimated load factor at 0.5 MPa is
Can be used as "α ≦ 50"

STEP-2 Check of the stroke end speed and G factor (For details on how to calculate, refer to page 188.)

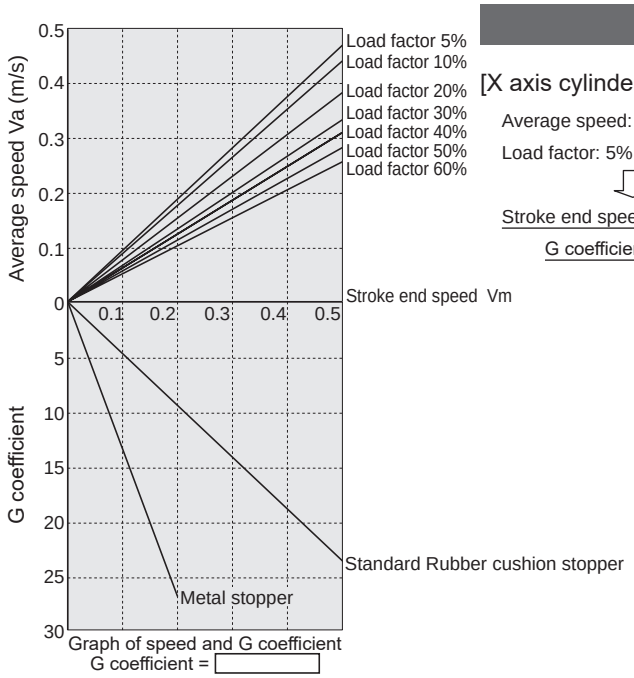

Graph of speed and G coefficient
G coefficient = ☐

Selection example

[X axis cylinder]

Average speed: 300 mm/s
Load factor: 5% or less (1.4%)
⇩
Stroke end speed: 310 mm/s
G coefficient: 4

[Z axis cylinder]

Average speed: 50 mm/s
Load factor: 5% or less (3.5%)
Stopper: Rubber cushion stopper
⇩
Stroke end speed: 55 mm/s
G coefficient: 3

STEP-3 Check of the allowable absorbed energy (For details on how to calculate, refer to page 189.)

Formula

$$E = \frac{1}{2} \times (m + m_\alpha) \times Vm^2$$

E : Kinetic energy at workpiece end (J)
m : Load weight (kg)
m_α : Table weight (kg)
Vm : Stroke end speed (m/s)

Selection example

[X axis cylinder]

$$E = \frac{1}{2} \times (1.0 + 1.29 + 0.01 + 0.035) \times 0.31^2 = 0.11\ (J)$$

Can be used since the allowable absorbed energy of the shock absorber stopper is "1.3J"

[Z axis cylinder]

$$E = \frac{1}{2} \times (1.0 + 0.035) \times 0.055^2 = 0.002\ (J)$$

Can be used since the allowable absorbed energy of the rubber cushion stopper is "0.14J"

STEP-4 Check of the allowable static load (For details on how to calculate, refer to page 189.)

Formula

● Vertical load

$W' = W$

● Bending moment: M1' (N·m)

$M1' = L_1 \times W$

● Radial moment: M2' (N·m)

$M2' = L_2 \times W$

● Torsion moment: M3' (N·m)

$M3' = L_3 \times W$

◎ Synthesis of moment

$$M'_T = \frac{W'}{W'max} + \frac{M1' \times G}{M1'max} + \frac{M2'}{M2'max} + \frac{M3' \times G}{M3'max}$$

Note) In the crossed unit, a moment of impact may occur in the M2 direction. Multiply the G coefficient with the M2' value as necessary.

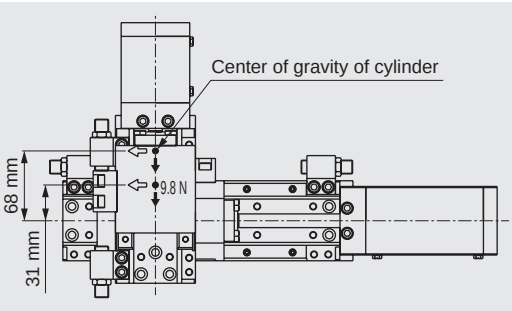

Selection example

[Calculating load and moment]

[X axis cylinder]

W' = 1.0 × 9.8 + 1.44 × 9.8 = 23.9 (N)

M1' = 0.054 × 9.8 + 0.017 × 1.44 × 9.8
= 0.8 (N·m)

(Add the value of the Z-axis cylinder since it works as a moment.)

M2' = 0.054 × 9.8 + 0.017 × 1.44 × 9.8
= 0.8 (N·m)

M3' = 0.031 × 9.8 + 0.068 × 1.44 × 9.8
= 1.3 (N·m)

[Z axis cylinder]

W' = 0 (N)

M1' = 0.02 × 9.8 = 0.2 (N·m)

M2' = 0.02 × 9.8 = 0.2 (N·m)

M3' = 0.001 × 9.8 = 0.01 (N·m)

[Resultant moment when the X-axis cylinder operates]

Stroke end speed: 310 mm/s, G factor: 4

[X axis cylinder]

$$M'_T = \frac{23.9}{970} + \frac{0.8 \times 4}{128} + \frac{0.8}{116} + \frac{1.3 \times 4}{128} = 0.1$$

Can be used since the resultant moment (M'_T) is "1 or less"

[Z axis cylinder]

$$M'_T = \frac{0}{670} + \frac{0.2}{52} + \frac{0.2 \times 4}{110} + \frac{0.01 \times 4}{52} = 0.01$$

(Multiply the G factor if a moment of impact in M2 direction is caused in the Z-axis cylinder by operation of the X-axis cylinder.)

Can be used since the resultant moment (M'_T) is "1 or less"

[Resultant moment when the Z-axis cylinder operates]

Stroke end speed: 55 mm/s, G factor: 3

[X axis cylinder]

$$M'_T = \frac{23.9}{970} + \frac{0}{128} + \frac{0.5 \times 3 + 0.2}{116} + \frac{0}{128} = 0.04$$

(Multiply the G factor if a moment of impact in M2 direction is caused in the X-axis cylinder by operation of the Z-axis cylinder.)

Can be used since the resultant moment (M'_T) is "1 or less"

[Z axis cylinder]

$$M'_T = \frac{0}{670} + \frac{0.2 \times 3}{52} + \frac{0}{110} + \frac{0}{52} = 0.01$$

Can be used since the resultant moment (M'_T) is "1 or less"

STEP-5 Check of the allowable dynamic load (For details on how to calculate, refer to page 190.)

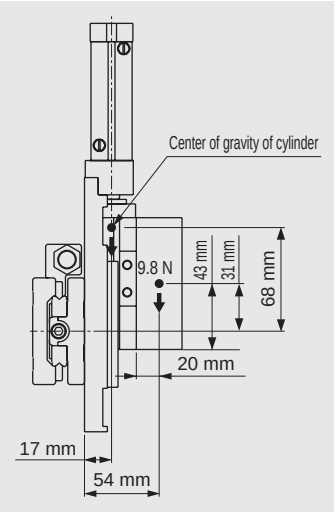

Formula

● Vertical load

$W = W$

● Bending moment: M1 (N·m)

$M1 = L_1 \times W$

● Radial moment: M2 (N·m)

$M2 = L_2 \times W$

● Torsion moment: M3 (N·m)

$M3 = L_3 \times W$

◎ Synthesis of moment

$$M_T = \frac{W}{Wmax} + \frac{M1}{M1max} + \frac{M2}{M2max} + \frac{M3}{M3max}$$

Selection example

[X axis cylinder]

W = 1.0 × 9.8 + 1.44 × 9.8
= 23.9 (N)

M1 = 0 (N·m)

M2 = 0.054 × 9.8 + 0.017 × 1.44 × 9.8
= 0.8 (N·m)

M3 = 0 (N·m)

$$M_T = \frac{23.9}{130} + \frac{0}{17} + \frac{0.8}{16.5} + \frac{0}{17} = 0.2$$

Can be used since the resultant moment (M'_T) is "1 or less"

[Z axis cylinder]

W = 0 (N)

M1 = 0.02 × 9.8 = 0.2 (N·m)

M2 = 0 (N·m)

M3 = 0 (N·m)

$$M_T = \frac{0}{97} + \frac{0.2}{7} + \frac{0}{15} + \frac{0}{7} = 0.03$$

Can be used since the resultant moment (M'_T) is "1 or less"

Pneumatic components

Safety Precautions

Always read this section before use.
Refer to page 2 for general information of the cylinder, and to page 320 for general information of the cylinder switch.

Thin linear slide cylinder LCX Series

Design & selection

1. Common

CAUTION

■ When selecting the cylinder, follow the "LCX selection guide" on pages 188 to 190.

■ Protect the cylinder with a cover to prevent damage and malfunction in a place where it is exposed to water or oil drops, or corrosive conditions.

■ Caution for mounting the switch
- Be careful of the lead wire direction when designing the 30 mm or less stroke length of axial lead wire and the 20 mm stroke length of radial lead wire since a switch is installed in each groove of the body.

■ Keep the supply pressure 0.5 MPa and over when the ambient temperature of the cylinder is 5°C or less.

■ Contact CKD if the use environment is always cold (5°C or less) or hot (40°C and over).

■ The following two types of stopper with stroke adjusting function are available.
- Rubber cushion stopper
  The stopper has an integrated urethane rubber cushion. A stopper allowing for contact to the metal part at 0.4 MPa and over for a stable stop position is also available. Contact CKD for details.
- Metal stopper
  The stopper has no cushion mechanism and should be used for a low-load and low-speed application. The stop position is stable since it does not suffer from deformation of a rubber cushion.

Mounting, installation & adjustment

1. Common; when piping

CAUTION

■ Precautions for piping
Be sure to attach a speed controller during piping before use. The available fittings are as below.

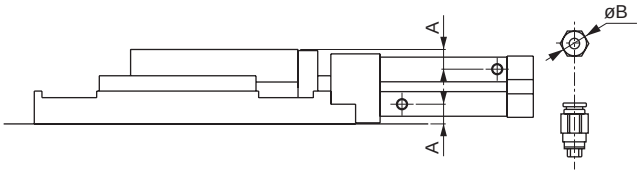

Descriptions / Bore size (mm)	Port diameter	Port location dimensions A	Applicable fitting	Fitting O.D. B
ø25	M5	9.5	SC3W-M5-4-P7* SC3W-M5-6-P7* GWS4-M5-S-P7* GWS4-M5-P7* GWL4-M5-P7* GWS6-M5-S-P7* GWS6-M5-P7* GWL6-M5-P7*	ø17 or less
ø32		9		

2. Common; when installing

CAUTION

■ The installation surfaces of the base and table have been finished with precision machining to obtain high-precision linear movement. Therefore, grinding the installation surface of the device to improve flatness will enable more stable high-precision performance. (Recommended flatness: 0.01 mm or less) Do not damage surface flatness by denting or scratching the mounting surface.

■ Observe the following bolt insertion lengths and tightening torque when installing the jig on the table or base.
[fig. 1]

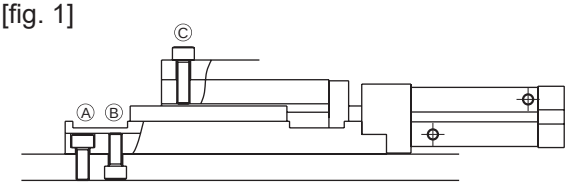

Descriptions	Ⓐ		Ⓑ			Ⓒ		
	Applicable bolts	Tightening torque (N·m)	Applicable bolts	Tightening torque (N·m)	Max. insertion length	Applicable bolts	Tightening torque (N·m)	Max. insertion length
LCX-25 LCX-32	M6	4.3 to 5.2	M6 × 1.0	4.3 to 5.2	9.5 mm	M6 × 1.0	4.3 to 5.2	11 mm

Mounting, installation & adjustment

■ Observe the following tightening torque of bolts and nuts of the stopper.
[Fig. A]

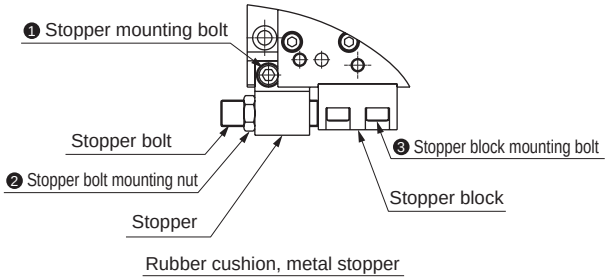

Descriptions	❶ Stopper mounting bolt (N·m)	❷ Stopper bolt mounting nut (N·m)	❸ Stopper block mounting bolt (N·m)
LCX-25	4.3 to 5.2	4.5 to 6.0	4.3 to 5.2
LCX-32			

■ The cylinder switch could malfunction if there is a magnetic substance such as a metal plate installed adjacently. To ensure safe operation, keep it 10 mm and over away from the cylinder surface or change the installation surface of the cylinder switch.
(Common for all port sizes)

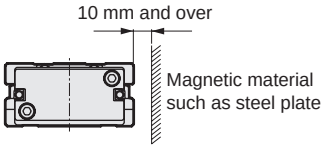

■ The cylinder switches may accidentally function if the cylinders are close to each other. Keep the distance between the surfaces of the cylinders.
(Common for all port sizes)

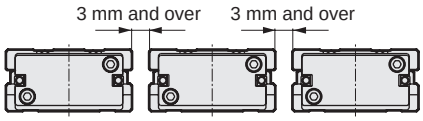

■ When using a positioning hole, use a pin of the dimensions that do not require press fitting. If a pin is press fitted, the load of press fitting may damage or distort the linear guide, lowering the accuracy.
The recommended tolerance of a pin is JIS tolerance m6 or less.

During use & maintenance

1. Common

⚠ CAUTION

■ Apply AFF grease (THK) to the guide rail in six months or when the number of operation times reaches one million, whichever comes first.

2. Long stroke length LCX-*L

■ The preload of the linear guide has been adjusted to an optimum value.
Do not loosen or tighten the hexagon socket set screw. Doing so may degrade the product performance.

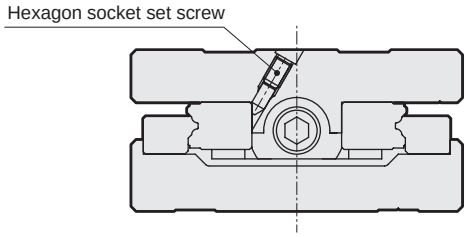

MEMO

STM

Guided cylinder

ø6/ø10

Combined functions

Overview

This is a super compact guided cylinder that provides high freedom in mounting and abundant variations, with attention to ease of use and of selection.

CONTENTS

Product introduction 200

● **Double acting/single rod clean room specifications (STM-B-P7*) 202**

Selection guide 206

⚠ Safety precautions 208

Super compact handy cylinders

Super compact guided cylinder STM Series (ø6/ø10) with a high level of mounting flexibility and rich variations promoting ease of use and selection.

Ball bearing
Clean room specifications are available.

High-performance guide

Rigid and lateral load resisting cylinder with excellent rod non-rotating accuracy of ±0.08*.

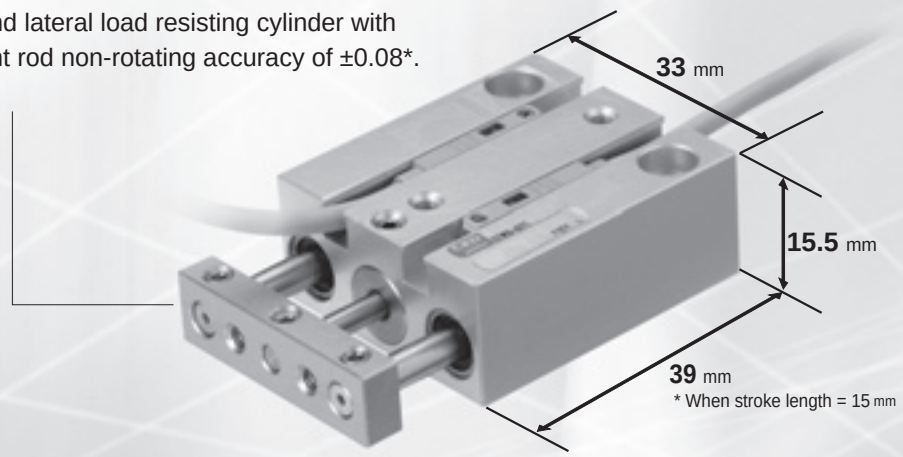

Super compact size

The smallest size is 33 mm wide and 15.5 mm high.
Super compact space saving in guided cylinders.

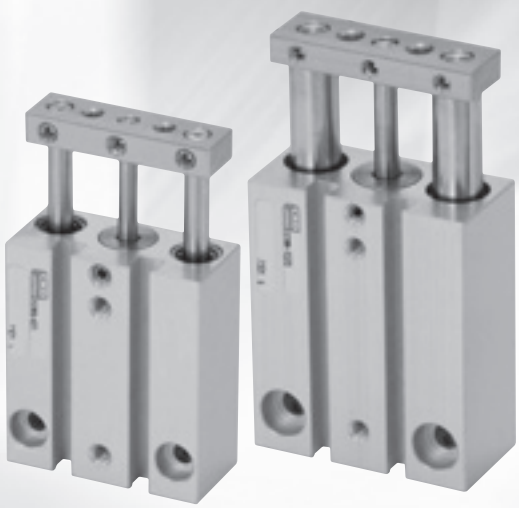

Guided cylinder

STM Series

suitable for various uses

Piping direction

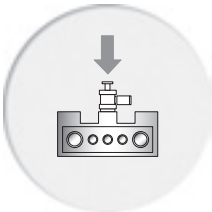

① Front piping

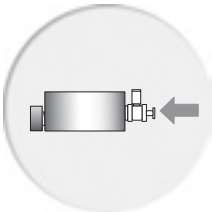

② Rear piping (Option)

Supports rear piping and side side mounting

In addition to the front side, common piping on the rear side is possible. (Option)
Side mounting of cylinder is supported. Multiple units can be installed even in small spaces. (Option)

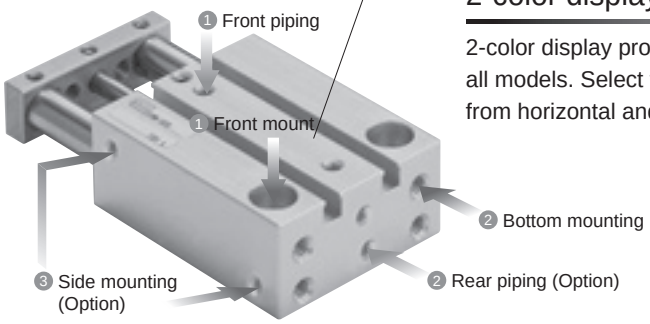

2-color display switch can be mounted.

2-color display proximity switch can be mounted on all models. Select the switch lead wire direction from horizontal and vertical.

* The picture shows all options for explanation purpose. Side and bottom mounting options are not available at the same time. The same applies to piping options.

Mounting orientation

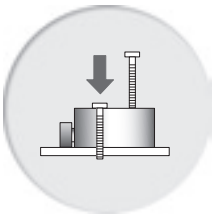

① Front mounting

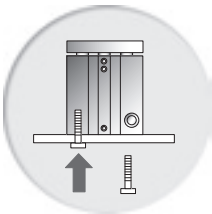

② Bottom mounting

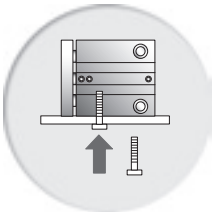

③ Side mounting (Option)

Suitable for clean rooms

Clean room specifications (STM-B...P7) are available.

Suitable for conveying small parts

Suitable for conveying small parts including semiconductors and precision components where you can use the cylinders for positioning, clamping, press fitting, lifting, pushing and more.

RoHS Directive compliant

Free from environmentally harmful substances such as lead and hexavalent chromium.

RoHS

Applications

Suitable for various manufacturing processes.

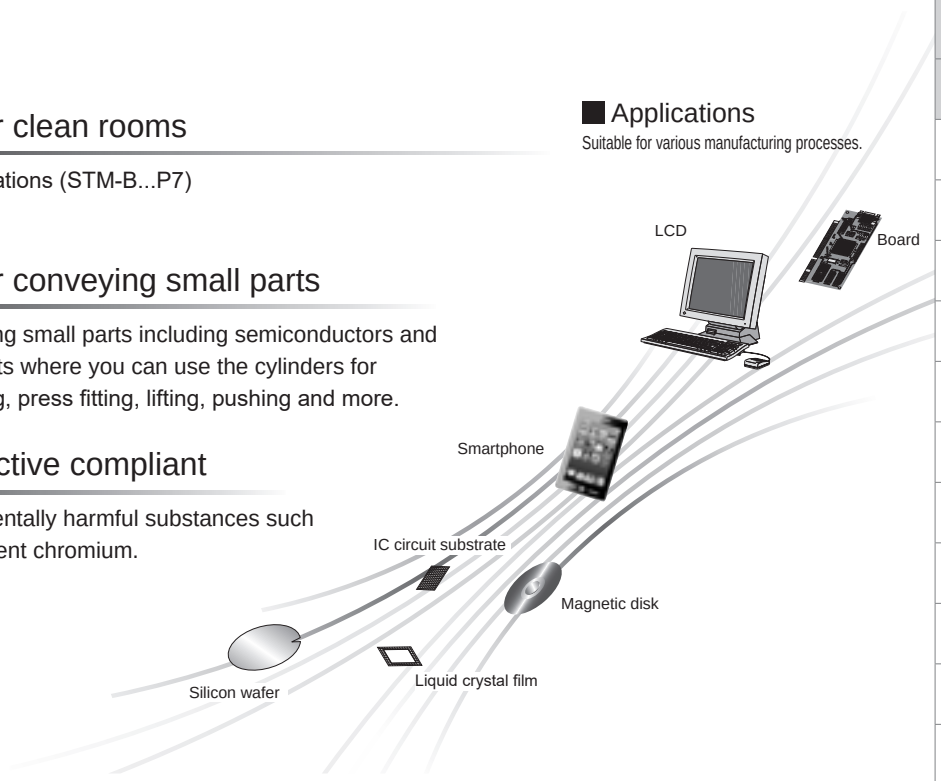

STM Series variation

Model variations	Bore size	Stroke length (mm)				Option	
		5	10	15	20	Side mounting A	Rear piping R
Clean room specifications STM-B-P7* Series	ø 6						
	ø 10						

* Ball bearing only

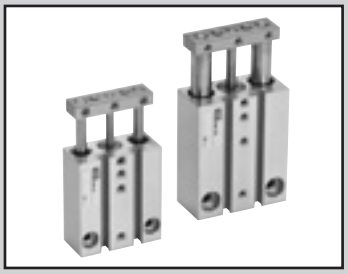

Guided cylinder Double acting/single rod clean room specifications

STM-B Series

● Bore size: ø6/ø10

JIS symbol

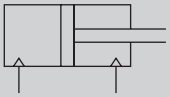

RoHS CAD

Structure and material restriction

	Structure	Model No.
P7 Series	Exhaust treatment	P72
	Vacuum treatment	P73

Specifications

Descriptions	STM-B	
Bore size mm	ø6	ø10
Actuation	Double acting	
Working fluid	Compressed air	
Max. working pressure MPa	0.7 (≈100 psi, 7 bar)	
Min. working pressure MPa	0.2 (≈29 psi, 2 bar)	
Proof pressure MPa	1.05 (≈150 psi, 10.5 bar)	
Ambient temperature °C	-10 (14°F) to 60 (140°F) (no freezing)	
Port size	M3	
Port size (relief port)	M3	
Stroke tolerance mm	+1.5 0	
Working piston speed mm/s	50 to 500	
Cushion	With rubber cushion	
Lubrication	Not available	
Allowable energy absorption J	0.008	0.054

Stroke length

Bore size	Standard stroke length (mm)	Max. stroke length (mm)	Min. stroke length	Min. stroke with switch
ø6	5/10/15	15	5	5
ø10	5/10/15/20	20		

Note: Product other than standard stroke length is custom order.

Switch specifications

Descriptions	Proximity 2-wire	Proximity 3-wire	Proximity 2-wire		Proximity 3-wire		
	F2S	F3S	F2H/F2V	F2YH/F2YV	F3H/F3V	F3PH/F3PV (custom order)	F3YH/F3YV
Applications	Programmable controller	Programmable controller, relay	Programmable controller		Programmable controller, relay		
Output method	-	NPN output	-		NPN output	PNP output	NPN output
Power supply voltage	-	10 to 28 VDC	-		10 to 28 VDC	4.5 to 28 VDC	10 to 28 VDC
Load voltage	10 to 30 VDC	30 VDC or less	10 to 30 VDC	24 VDC ±10%	30 VDC or less		
Load current	5 to 20 mA	50 mA or less	5 to 20 mA (*2)		50 mA or less		
Indicator lamp	Red LED (Lit when ON)		LED (Lit when ON)	Red/green LED (Lit when ON)	LED (Lit when ON)	Yellow LED (Lit when ON)	Red/green LED (Lit when ON)
Leakage current	1 mA or less	10 μA or less	1 mA or less		10 μA or less		
Weight g	1 m: 10 3 m: 29		1 m: 10 3 m: 29		1 m: 10 3 m: 29		

*1: Refer to page 309 for detailed switch specifications and dimensions.
*2: Max. load current: 20mA at 25°C.The current is lower than 25 mA if the operating ambient temperature around the switch is higher than 20°C. (60 to 5 mA at 10°C.)
*3: The F type switch uses a bend-resistant lead wire.

Cylinder weight

Unit: g

Model No.	Stroke length (mm) / Bore size (mm)	5	10	15	20	Switch weight
STM-B	ø6	56.2	62.5	68.7	-	Refer to weight information provided in the switch specifications.
	ø10	87.9	96.4	104.8	113.3	

Theoretical thrust table

Unit: N

Bore size (mm)	Operating direction	0.2	0.3	0.4	0.5	0.6	0.7
ø6	Push	5.65	8.48	11.3	14.1	17.0	19.8
	Pull	4.24	6.36	8.48	10.6	12.7	14.8
ø10	Push	15.7	23.6	31.4	39.3	47.1	55.0
	Pull	13.2	19.8	26.4	33.0	39.6	46.2

How to order

Without switch (Magnet for switch incorporated)

STM - B - 10 - 15 ———— A - P72

With switch (Magnet for switch incorporated)

STM - B - 10 - 15 - F2V - D - A - P72

Ⓐ Bearing
Ⓑ Bore size
Ⓒ Stroke length
Ⓓ Switch model No. *1
Ⓔ Switch quantity
Ⓕ Option
Ⓖ Clean room specifications

Code	Content
Ⓐ Bearing	
B	Ball bearing

Ⓑ Bore size (mm)	
6	ø6
10	ø10

Ⓒ Stroke length (mm)

		Bore size	
		6	**10**
5	5	●	●
10	10	●	●
15	15	●	●
20	20		●

Ⓓ Switch model No.

Lead wire straight	Lead wire L-shaped	Contact	Voltage AC	Voltage DC	Display	Lead wire
-	F2S*	Proximity		●	1-color display	2 wires
F2H*	F2V*			●		
-	F3S*			●		3 wires
F3H*	F3V*			●		
F3PH*	F3PV*			●	1-color display (custom order)	
F2YH*	F2YV*			●	2-color display	2 wires
F3YH*	F3YV*			●		3 wires

*** Lead wire length**	
Blank	1 m (standard)
3	3 m (option)

Ⓔ Switch quantity	
R	1 (on rod end)
H	1 (on head end)
D	2

Ⓕ Option	
A	Side installation

Ⓖ Clean room specifications

	Structure
P72	Exhaust treatment
P73	Vacuum treatment

⚠ Precautions for model No. selection

*1: When using a 2-color display proximity switch for STM-B-6-P72/P73, avoid mounting the cylinder on a magnetic substance such as a metal plate. This could lead to switch detection malfunction.

[Example of model No.]

STM-B-10-15-F2H-D-A-P72

Model: Guided cylinder

Ⓐ Bearing : Ball bearing
Ⓑ Bore size : ø10 mm
Ⓒ Stroke length : 15 mm
Ⓓ Switch model No. : Proximity F2H switch, lead wire 1 m
Ⓔ Switch quantity : 2
Ⓕ Option : Side mounting
Ⓖ Clean room specifications : Exhaust treatment

How to order switch

SW - F2V

Switch model No.
(Item Ⓓ above)

Dimensions

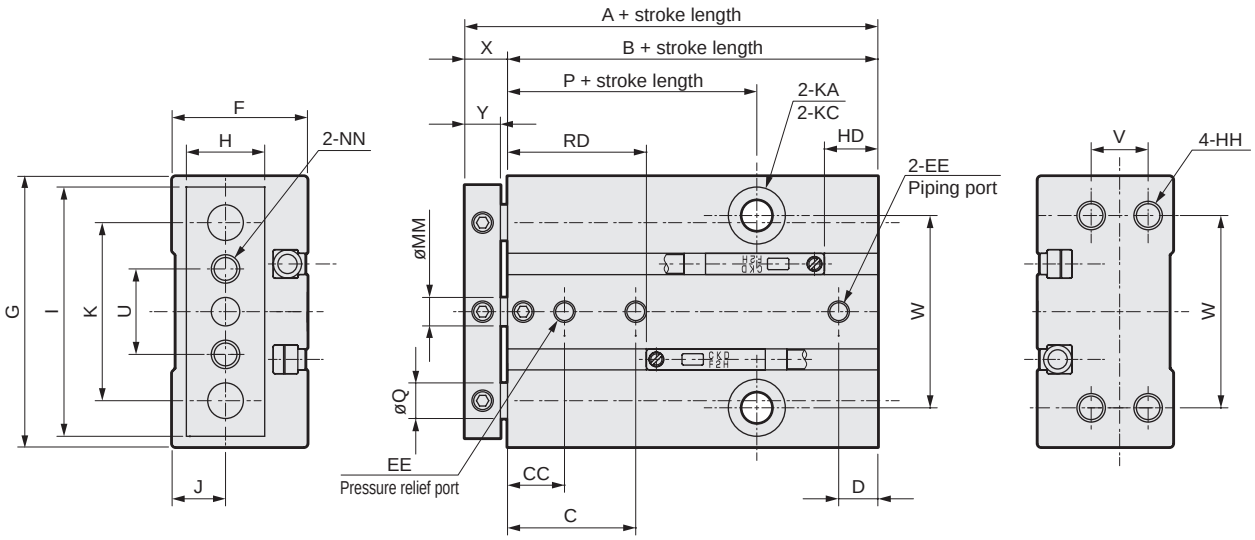

Code / Bore size (mm)	Standard stroke length (mm)	A	B	C	CC	D	EE	F	G	H	HH	I	J	K	KA
6	5/10/15	40	34	17.5	7.5	5	M3	15.5	33	9	M3 depth 5	31	6	23	3.4 penetrating
10	5/10/15/20	44	38	18.5	8.5	7	M3	19	38	11	M4 depth 5	35	7.5	25	4.3 penetrating

Code / Bore size (mm)	KC	MM	NN	P	Q	U	V	W	X	Y	RD	HD
6	6.1 spot face depth 3.3	3	M3 penetrating	17	4	12	6	25	6	5	18	5.5
10	8 spot face depth 4.4	4	M4 penetrating	20.5	5	12	8	27	6	5	20	7.5

Dimensions with options

● Side mounting (A)

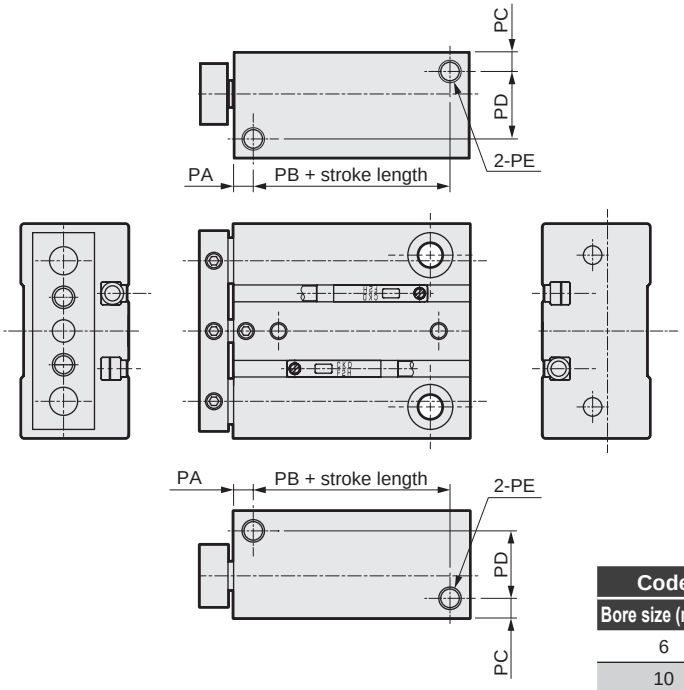

Code / Bore size (mm)	Standard stroke length (mm)	PA	PB	PC	PD	PE
6	5/10/15	3	18	3	10	M3 depth 5
10	5/10/15/20	4	21	4	12	M4 depth 5

Selection guide

Allowable lateral load

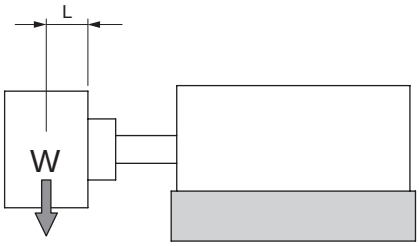

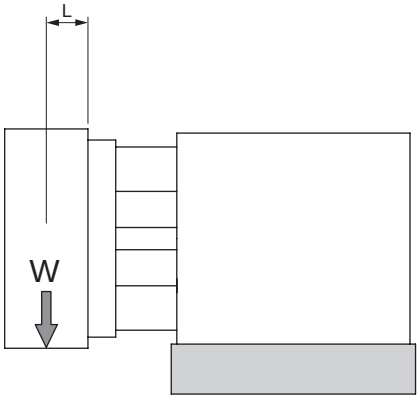

● STM-B-6

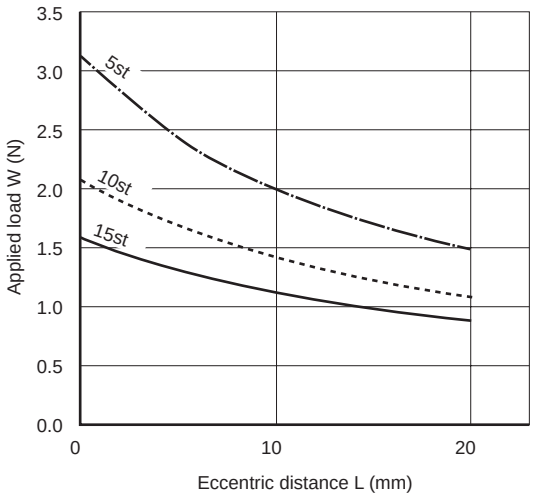

● STM-B-10

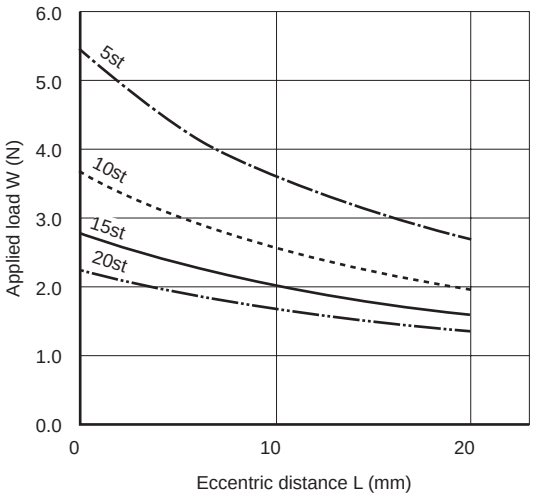

Allowable torque

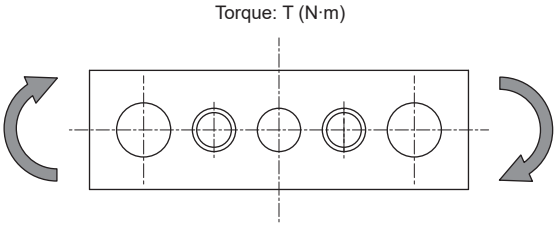

Unit: N·m

Bore size (mm)	Model No.	Stroke length (mm)			
		5	10	15	20
ø6	STM-B-6	0.018	0.012	0.009	-
ø10	STM-B-10	0.034	0.023	0.018	0.014

Non-rotating accuracy (reference value)

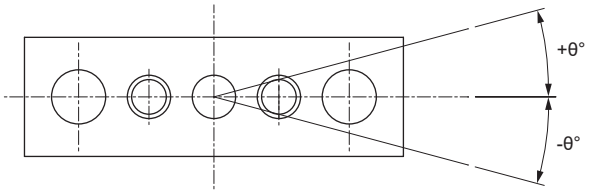

Bore size (mm)	Non-rotating accuracy θ (degree)
ø6	±0.08
ø10	±0.08

Allowable absorbed energy value

Use in the range below and to the left of the curve. For use in the upper right range, provide an external shock absorber.

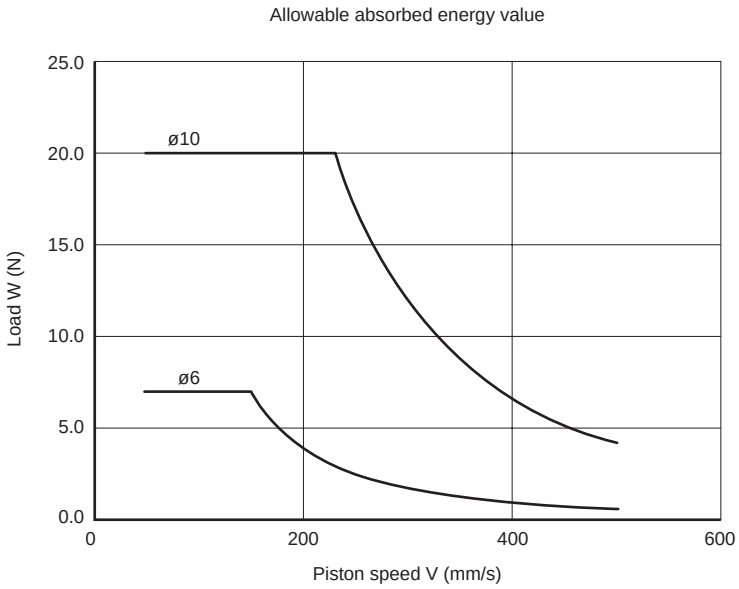

Pneumatic components

Safety Precautions

Always read this section before use.

Refer to page 2 for general information of the cylinder, and to page 320 for general information of the cylinder switch.

Guided cylinder STM Series

Design & selection

CAUTION

■ When using a 2-color display proximity switch for STM-B-6, avoid mounting the cylinder on a magnetic substance such as a metal plate. This could lead to switch detection malfunction.

■ Observe tightening torque when mounting the switch.
If the tightening torque range is exceeded, the mounting bolt, bracket, switch, etc., could be damaged. In addition, when tightening the set screw with a torque less than the tightening torque range, displacement of switch mounting position could occur.
Tightening torque: 0.03 to 0.08 (N·m)

Mounting, installation & adjustment

1. Common

CAUTION

■ Be sure to attach a speed controller during piping before use. In addition, when mounting the rear piping with through bolt, the applicable fittings are as follows.

Bore size	Port size	Available fitting/speed controller valve	Fitting O.D. D
ø6 ø10	M3	SC3W-M3-*-P7* SC3U-M3-*-P7*	ø8
		GWS-*-M3-S-P7*	
		FTS4-M3-P80 FTL4-M3-P80 *1	
		CG-S2-M3	

*1: Copper-based materials are used. Please refer to page 946 of this catalog.

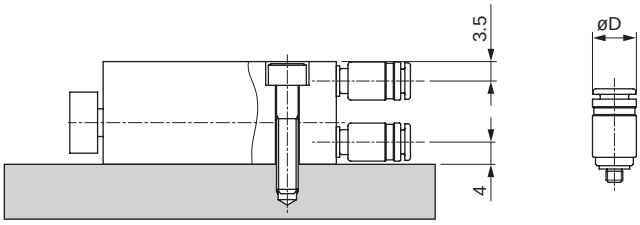

■ Do not damage surface flatness by denting or scratching the tube main body mounting surface or the end plate surface. Make sure that the flatness of the mating surface where the end plate will be attached is 0.02 mm or below.

■ When attaching a jig, etc., to the end plate, make sure that the bolt insertion length is equivalent to the Y dimension. Not doing so could cause malfunction or damage of the end plate.

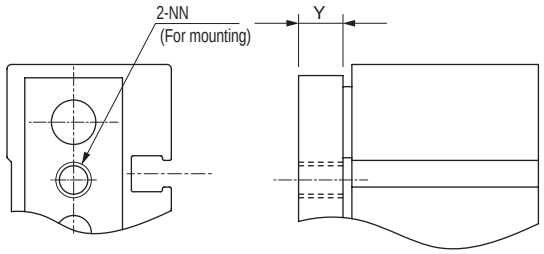

Bore size (mm)	Y dimensions
ø6	5
ø10	

■ Rubber cushion is integrated as a cushion mechanism. The table below shows the kinetic energy which can be absorbed by the rubber cushion. If the energy exceeds these values, consider using a separate shock absorber.

Bore size (mm)	Allowable energy absorption (J)
ø6	0.008
ø10	0.054

■ When mounting the body with bolts, tighten them to the tightening torque as specified in the table below.

Bore size (mm)	Thread size	Tightening torque (N•m)		
		Through bolt	Bottom mount	Head end installation
ø6	M3	1.1	0.6	
ø10	M4	2.7	1.6	

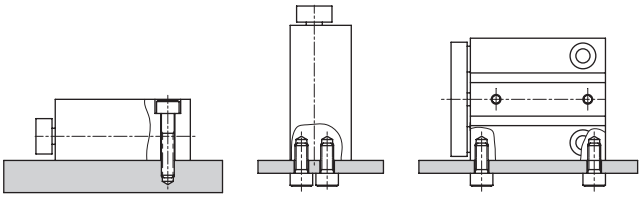

Through bolt　　Head side mount　　Side mounting

■ When mounting the workpiece on the end plate, tighten the bolts to the tightening torque as specified in the table below.

Bore size (mm)	Thread size	Tightening torque (N•m)
ø6	M3	0.6
ø10	M4	1.6

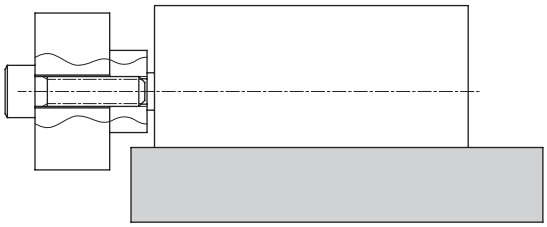

2. With switch

■ The cylinder switch may malfunction if there is a magnetic substance such as a metal plate installed adjacently. Check that a distance of 20 mm is provided from the surface of the cylinders. (Same clearance for all bore sizes)

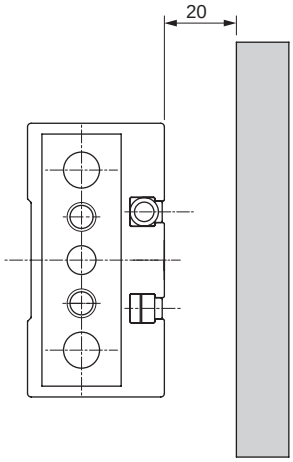

■ The cylinder switch may malfunction if cylinders are installed adjacently. Check that the following distances are provided between cylinders. (Same clearance for all bore sizes)

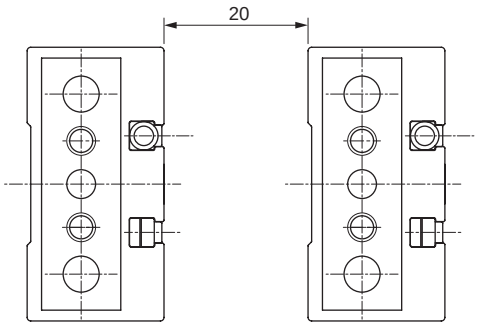

During use & maintenance

⚠ CAUTION

■ This cylinder cannot be dismantled. Do not forcefully disassemble it.

MEMO

STG

Guided cylinder

Combined functions cylinder

ø12/ø16/ø20/ø25/ø32/ø40/ø50/ø63

Overview

Lighter in weight and more effectively saves resources than conventional products. In addition, the guide rod bearing section is improved and the bearing structure is modified. This improves the lateral load proof characteristics compared to conventional products, realizing stable operation.

Features

Global environment friendly

The cylinder body and cylinder switch include no lead, hexavalent chromium and other substances that damage the global environment. RoHS compliant products are also available.

Improved maintenance performance

An Allen wrench is used for piston rod mounting. Special tools are not required. Maintenance performance such as packing replacement is improved.

CONTENTS

Product introduction 212

Series variation

Variation and option selection table 214

● **Double acting/single rod clean room specifications (STG-B-P7*) 216**

STG Series with switch common installation dimensions 222

Selection guide 224

⚠ Safety precautions 233

Global environment-friendly,

Hazardous substances are eliminated, emphasizing environmental protection and pollution prevention.
Load proof characteristics improved Guided cylinder STG Series (ø12 to ø63)

Standard tools can be used for maintenance.

Hexagonal wrench is used for mounting the piston rod. There is no need to use a special tool for maintenance.

RoHS

Environment compatible products

The cylinder body and cylinder switch include no lead, hexavalent chromium and other substances that damage the global environment. This product conforms to RoHS Directive adopted by the EU.
(solder and lead wire are lead-free.)

Supports high load

The guide rod bearing section has been improved and the bearing structure changed. Resistant to lateral and eccentric loads, it has improved load proof characteristics compared to conventional products. Operation is now stabler than ever.

Lighter weight Resource saving

Aluminum cylinder body shape has been revised and optimized. Lighter in weight and more effectively saves resources than conventional products.

High precision/high rigidity

STG-B Series

new guided cylinder

2 directions for piping, 3 types of mounting

● Piping direction

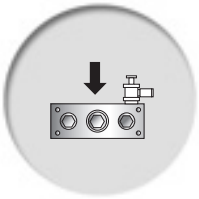

❶ Front piping

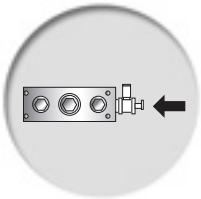

❷ Side piping

● Mounting orientation

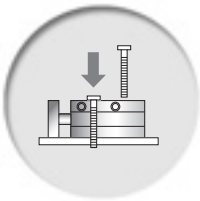

① Front mount

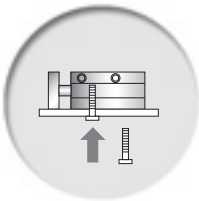

② Side mount

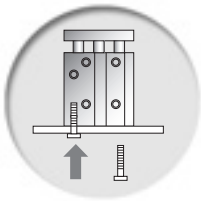

③ Bottom mount

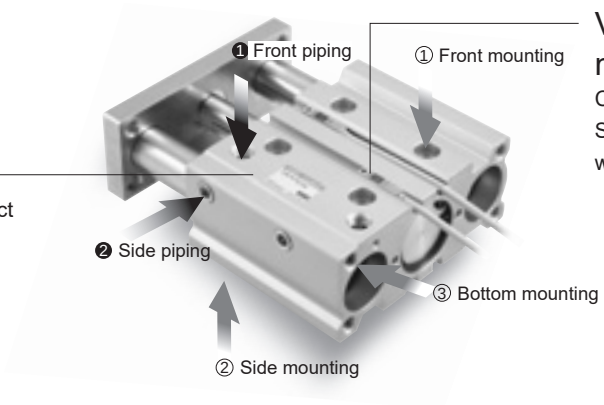

Various switches are mountable

Compact T switch is mounted.
Saves space by eliminating protrusions when mounted.

Unified white system

The white system surface of the product matches various devices.

Supports a wide range of applications and environments

The lineup contains a wide range of new models intended to respond to various applications and environments. Series now offering far more! Operation is now stabler than ever.

■ STG Series variation

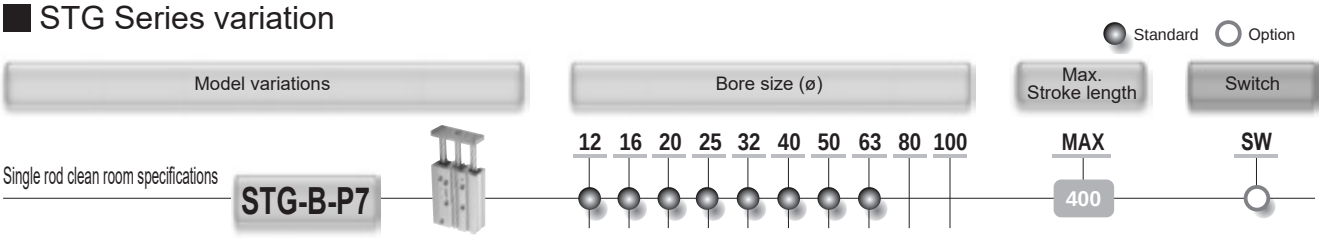

SCPD3
SCM
SSD2
MDC2
SMG
LCM
LCR
LCG
LCX
STM
STG
STR2
MRL2
GRC
Cylinder switch
MN3E MN4E
4GA/B
M4GA/B
MN4GA/B
F.R (module unit)
Clean F.R
Precision R
Press gauge Diff. press gauge
Electro-pneumatic R
Speed controller
Auxiliary valve
Fitting/ tube
Clean air unit
Pressure sensor
Flow rate sensor
Valve for air blow
Ending

Variation and option combination selection table

◎ : Option variation (check category 2)
○ : C5 compatible (check category 3)
△ : Available depending on conditions (Estimation)
: Not available

Category		Category	Clean room specifications	
			Clean room specifications (exhaust treatment)	Clean room specifications (vacuum treatment)
		Code	P72	P73
Variation	Double acting basic	B	◎	◎
	Position locking	Q	△	△
	With air cushion	C		
	Heat resistant (120°)	T		
	Packing seal material fluoro rubber	T2	△	△
	Low speed	O	○	○
	Powerful scraper	G		
	Coil scraper	G1		
	Coolant proof scraper (NBR)	G2		
	Coolant proof scraper (FKM)	G3		
	Spatter adherence prevention	G4		
Port thread	NPT (ø20 and over)	N	○	○
	G (ø20 and over)	G	○	○
Cushion	Rubber-air cushioned	C		
Option	Corrosion proof	M		
	Copper and PTFE free	P6		

MEMO

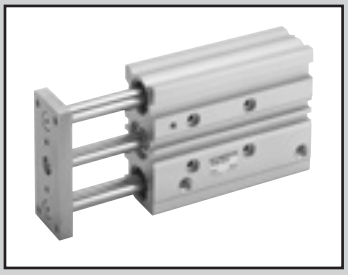

Guided cylinder Double acting/single rod clean room specifications

STG-B Series

● Bore size: ø12/ø16/ø20/ø25/ø32/ø40
ø50/ø63

JIS symbol

RoHS CAD

Structure and material restriction

	Structure	Model No.
P7 Series	Exhaust treatment	P72
	Vacuum treatment	P73

Specifications

Descriptions	STG-B							
Bore size mm	ø12	ø16	ø20	ø25	ø32	ø40	ø50	ø63
Actuation	Double acting							
Working fluid	Compressed air							
Max. working pressure MPa	1.0 (≈150 psi, 10 bar)							
Min. working pressure MPa	0.2 (≈29 psi, 2 bar)		0.15 (≈22 psi, 1.5 bar)		0.1 (≈15 psi, 1 bar)			
Proof pressure MPa	1.6 (≈230 psi, 16 bar)							
Ambient temperature °C	-10 (14°F) to 60 (140°F) (no freezing)							
Port size	M5		Rc1/8				Rc1/4	
Port size (relief port)	M5							
Stroke tolerance mm	+2.0 0							
Working piston speed mm/s	50 to 500							50 to 300
Cushion	With rubber cushion							
Lubrication	Not available							
Allowable energy absorption J	0.056	0.088	0.157	0.157	0.401	0.627	0.980	1.560

Stroke length

Bore size	Standard stroke length (mm)	Max. stroke length (mm)	Min. stroke length (mm)	Min. stroke with switch (mm)
ø12	10/20/30/40/50/75/100 125/150/175/200/250	250	5	5 (10)
ø16				
ø20	20/30/40/50/75/100/125 150/175/200/250/300/350/400	400		
ø25				
ø32	25/50/75/100 125/150/175 200/250/300 350/400			
ø40				
ø50				
ø63				

*1: The custom stroke length is available in 5 mm increments. However, the total dimensions are the same as the longer standard stroke length. A dedicated body with dimensions matched to the stroke length is available. Contact CKD for details. *2

*2: For types with one or two switches. The value in ( ) is the min. stroke length for switches of the 2-color display and AC magnetic field proof.

Theoretical thrust table

(Unit: N)

Bore size (mm)	Operating direction	Working pressure MPa										
		0.1	0.15	0.2	0.3	0.4	0.5	0.6	0.7	0.8	0.9	1.0
ø12	Push	—	—	22.6	33.9	45.2	56.5	67.9	79.2	90.5	1.02×10^2	1.13×10^2
	Pull	—	—	17.0	25.4	33.9	42.4	50.9	59.4	67.9	76.3	84.8
ø16	Push	—	—	40.2	60.3	80.4	1.01×10^2	1.21×10^2	1.41×10^2	1.61×10^2	1.81×10^2	2.01×10^2
	Pull	—	—	30.2	45.2	60.3	75.4	90.5	1.06×10^2	1.21×10^2	1.36×10^2	1.51×10^2
ø20	Push	—	47.1	62.8	94.2	1.26×10^2	1.57×10^2	1.88×10^2	2.20×10^2	2.51×10^2	2.83×10^2	3.14×10^2
	Pull	—	35.3	47.1	70.7	94.2	1.18×10^2	1.41×10^2	1.65×10^2	1.88×10^2	2.12×10^2	2.36×10^2
ø25	Push	—	73.6	98.2	1.47×10^2	1.96×10^2	2.45×10^2	2.95×10^2	3.44×10^2	3.93×10^2	4.42×10^2	4.91×10^2
	Pull	—	56.7	75.6	1.13×10^2	1.51×10^2	1.89×10^2	2.27×10^2	2.64×10^2	3.02×10^2	3.40×10^2	3.78×10^2
ø32	Push	80.4	1.21×10^2	1.61×10^2	2.41×10^2	3.22×10^2	4.02×10^2	4.83×10^2	5.63×10^2	6.43×10^2	7.24×10^2	8.04×10^2
	Pull	60.3	90.5	1.21×10^2	1.81×10^2	2.41×10^2	3.02×10^2	3.62×10^2	4.22×10^2	4.83×10^2	5.43×10^2	6.03×10^2
ø40	Push	1.26×10^2	1.88×10^2	2.51×10^2	3.77×10^2	5.03×10^2	6.28×10^2	7.54×10^2	8.80×10^2	1.01×10^3	1.13×10^3	1.26×10^3
	Pull	1.06×10^2	1.58×10^2	2.11×10^2	3.17×10^2	4.22×10^2	5.28×10^2	6.33×10^2	7.39×10^2	8.44×10^2	9.50×10^2	1.06×10^3
ø50	Push	1.96×10^2	2.95×10^2	3.93×10^2	5.89×10^2	7.85×10^2	9.82×10^2	1.18×10^3	1.37×10^3	1.57×10^3	1.77×10^3	1.96×10^3
	Pull	1.65×10^2	2.47×10^2	3.30×10^2	4.95×10^2	6.60×10^2	8.25×10^2	9.90×10^2	1.15×10^3	1.32×10^3	1.48×10^3	1.65×10^3
ø63	Push	3.12×10^2	4.68×10^2	6.23×10^2	9.35×10^2	1.25×10^3	1.56×10^3	1.87×10^3	2.18×10^3	2.49×10^3	2.81×10^3	3.12×10^3
	Pull	2.80×10^2	4.20×10^2	5.61×10^2	8.41×10^2	1.12×10^3	1.40×10^3	1.68×10^3	1.96×10^3	2.24×10^3	2.52×10^3	2.80×10^3

Switch specifications

● 1-color/2-color display for AC magnetic field

Descriptions	Proximity 2-wire				Proximity 3-wire				Reed 2-wire							Proximity 2-wire
	T1H/ T1V	T2H/T2V/ T2JH/T2JV	T2YH/ T2YV	T2WH/ T2WV	T3H/ T3V	T3PH/ T3PV	T3YH/ T3YV	T3WH/ T3WV	T0H/T0V		T5H/T5V		T8H/T8V			T2YD
Applications	Programmable controller relay, small solenoid valve	Programmable controller			Programmable controller, relay				Programmable controller, relay		Programmable controller, relay IC circuit (without indicator lamp), serial connection		Programmable controller, relay			Programmable controller
Output method	-				NPN output	PNP output	NPN output	NPN output	-							
Power supply voltage	-				10 to 28 VDC				-							
Load voltage	85 to 265 VAC	10 to 30 VDC		24 VDC ±10%	30 VDC or less				12/24 VDC	100/110 VAC	5/12/24 VDC	100/110 VAC	12/24 VDC	110 VAC	220 VAC	24 VDC ±10%
Load current	5 to 100 mA	5 to 20 mA (*2)			100 mA or less		50 mA or less		5 to 50 mA	7 to 20 mA	50 mA or less	20 mA or less	5 to 50 mA	7 to 20 mA	7 to 10 mA	5 to 20 mA
Indicator lamp	LED (Lit when ON)	LED (Lit when ON)	Red/green LED (Lit when ON)	Red/green LED (Lit when ON)	LED (Lit when ON)	Yellow LED (Lit when ON)	Red/green LED (Lit when ON)	Red/green LED (Lit when ON)	LED (Lit when ON)		Without indicator lamp		LED (Lit when ON)			Red/green LED (Lit when ON)
Leakage current	1 mA or less with 100 VAC 2 mA or less with 200 VAC	1 mA or less			10 μA or less				0 mA							1 mA or less
Weight g	1 m: 33 3 m: 87 5 m: 142	1 m: 18 3 m: 49 5 m: 80	1 m: 33 3 m: 87 5 m: 142	1 m: 18 3 m: 49 5 m: 80	1 m: 18 3 m: 49 5 m: 80		1 m: 33 3 m: 87 5 m: 142	1 m: 18 3 m: 49 5 m: 80	1 m: 18 3 m: 49 5 m: 80				1 m: 33 3 m: 87 5 m: 142			1 m: 61 3 m: 166 5 m: 272

*1: Refer to page 309 for detailed switch specifications and dimensions.
*2: Max. load current: 20mA at 25°C.The current is lower than 25 mA if the operating ambient temperature around the switch is higher than 20˚C.
(60 to 5 mA at 10°C)
*3: Switch for AC magnetic field (T2YD/T2YDT) cannot be used in DC magnetic fields.

Cylinder weight

● STG-B-P7

Unit: kg

Descriptions / Bore size (mm)	Stroke length 10	20	25	30	40	50	75	100	125	150	175	200	250	300	350	400	Switch weight
ø12	0.27	0.30		0.33	0.38	0.42	0.50	0.58	0.68	0.76	0.84	0.92	1.09				Refer to the weight in the switch specifications.
ø16	0.38	0.43		0.47	0.54	0.59	0.70	0.82	0.95	1.06	1.17	1.29	1.50				
ø20		0.76		0.83	0.94	1.02	1.18	1.35	1.55	1.72	1.89	2.06	2.43	2.77	3.10	3.44	
ø25		1.06		1.14	1.32	1.41	1.63	1.86	2.12	2.35	2.57	2.79	3.28	3.73	4.18	4.63	
ø32			1.62			1.92	2.36	2.67	3.03	3.34	3.64	3.95	4.62	5.23	5.84	6.45	
ø40			1.90			2.25	2.72	3.07	3.48	3.83	4.18	4.53	5.28	5.98	6.68	7.38	
ø50			3.24			3.78	4.50	5.04	5.66	6.19	6.73	7.26	8.45	9.51	10.61	11.67	
ø63			4.12			4.76	5.61	6.25	6.98	7.62	8.27	8.91	10.30	11.66	12.92	14.18	

SCPD3
SCM
SSD2
MDC2
SMG
LCM
LCR
LCG
LCX
STM
STG
STR2
MRL2
GRC
Cylinder switch
MN3E MN4E
4GA/B
M4GA/B
MN4GA/B
F.R (module unit)
Clean F.R
Precision R
Press gauge Diff. press gauge
Electro-pneumatic R
Speed controller
Auxiliary valve
Fitting/ tube
Clean air unit
Pressure sensor
Flow rate sensor
Valve for air blow
Ending

How to order

Without switch

STG - B - 32 - 25 ———— P72

With switch

STG - B - 32 - 25 - T2H - R - P72

Model No.

Ⓐ Bearing

Ⓑ Bore size

Ⓒ Stroke length

Ⓓ Switch model No. *1 *2 *3

Ⓔ Switch quantity

Ⓕ Clean room specifications

Code	Content
Ⓐ Bearing	
B	Ball bearing
Ⓑ Bore size (mm)	
12	ø12
16	ø16
20	ø20
25	ø25
32	ø32
40	ø40
50	ø50
63	ø63
Ⓒ Stroke length (mm)	
Refer to the stroke length table on following page.	

Ⓓ Switch model No.

Lead wire straight	Lead wire L-shaped	Contact	Voltage AC	Voltage DC	Display	Lead wire
T0H*	**T0V***	Reed	●	●	1-color display	2 wires
T5H*	**T5V***		●	●	Without indicator lamp	
T8H*	**T8V***		●	●	1-color display	
T1H*	**T1V***	Proximity	●		1-color display	2 wires
T2H*	**T2V***			●		
T3H*	**T3V***			●		3 wires
T3PH*	**T3PV***			●	1-color display	3 wires
T2WH*	**T2WV***			●	2-color display	2 wires
T2YH*	**T2YV***			●		
T3WH*	**T3WV***			●		3 wires
T3YH*	**T3YV***			●		
T2JH*	**T2JV***			●	1-color display off-delay	2 wires
T2YD*	**-**			●	2-color display for AC magnetic field	2 wires
T2YDT*	**-**			●		

* Lead wire length	
Blank	1 m (standard)
3	3 m (option)
5	5 m (option)

Ⓔ Switch quantity	
R	1 (on rod end)
H	1 (on head end)
D	2
T	3

Ⓕ Clean room specifications	
P72	Exhaust treatment
P73	Vacuum treatment

⚠ Precautions for model No. selection

*1: Switches other than Ⓔ Switch model No. are also available. (Custom order product) Refer to page 309 for details.
*2: T8H/V switch cannot be installed on STG-12 or 16.
*3: Switches are shipped with the product. Contact CKD if assembling before shipment is necessary.

[Example of model No.]

STG-B-40-75-T0H-D-P72

Model: Guided cylinder Double acting/single rod

Ⓐ Bearing : Ball bearing
Ⓑ Bore size : ø40 mm
Ⓒ Stroke length : 75 mm
Ⓓ Switch model No. : Reed T0H switch, lead wire length 1 m
Ⓔ Switch quantity : 2
Ⓕ Clean room specifications : Exhaust treatment

Ⓒ Stroke length

Stroke length (mm)		Applicable bore size							
		ø12	ø16	ø20	ø25	ø32	ø40	ø50	ø63
Standard stroke length	10	●	●						
	20	●	●	●	●				
	25					●	●	●	●
	30	●	●	●	●				
	40	●	●	●	●				
	50	●	●	●	●	●	●	●	●
	75	●	●	●	●	●	●	●	●
	100	●	●	●	●	●	●	●	●
	125	●	●	●	●	●	●	●	●
	150	●	●	●	●	●	●	●	●
	175	●	●	●	●	●	●	●	●
	200	●	●	●	●	●	●	●	●
	250	●	●	●	●	●	●	●	●
	300			●	●	●	●	●	●
	350			●	●	●	●	●	●
	400			●	●	●	●	●	●
Min. stroke length *2		5 (10)							
Custom stroke length *1		By 5 mm increments							

*1: The total dimensions are the same as the longer standard stroke length.
*2: The value in ( ) is the min. stroke length for switches of the 2-color display and AC magnetic field proof.

How to order switch

SW - T0V

Switch model No.
(Item Ⓓ on the previous page)

Note: Contact CKD if you use environment-friendly T switch.

SCPD3
SCM
SSD2
MDC2
SMG
LCM
LCR
LCG
LCX
STM
STG
STR2
MRL2
GRC
Cylinder switch
MN3E MN4E
4GA/B
M4GA/B
MN4GA/B
F.R (module unit)
Clean F.R
Precision R
Press gauge Diff. press gauge
Electro-pneumatic R
Speed controller
Auxiliary valve
Fitting/ tube
Clean air unit
Pressure sensor
Flow rate sensor
Valve for air blow
Ending

Dimensions (ø12/ø16/ø20/ø25)

● STG-B-12, 16, 20, 25

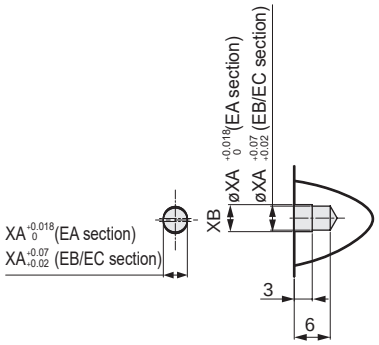

EA/EB/EC section long hole dimensions

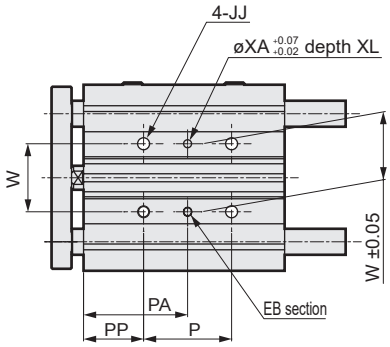

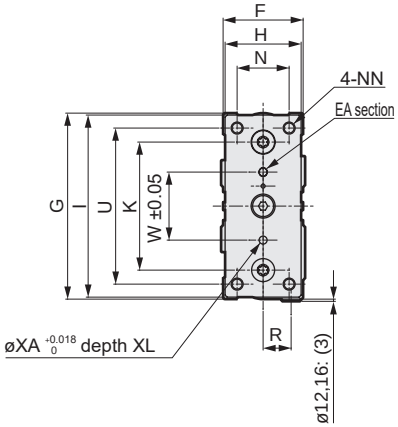

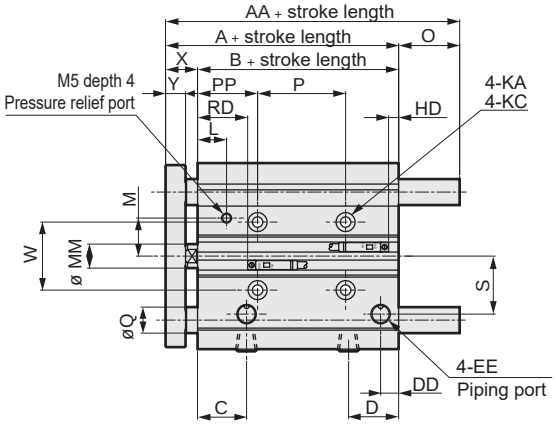

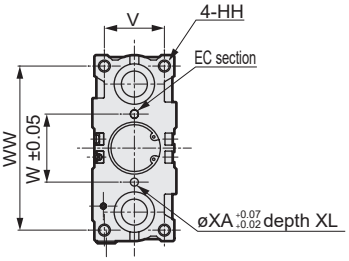

Code / Bore size (mm)	Standard stroke length (mm)	A	B	C	D	DD	EE	F	G	H	HH	I	JJ
ø12	10, 20, 30, 40, 50, 75, 100, 125	55	42	25	16	7	M5	26	58	22	M4 depth 10	56	M5 depth 10
ø16	150, 175, 200, 250	59	46	25	18	7.5	M5	30	64	25	M5 depth 12	62	M5 depth 10
ø20	20, 30, 40, 50, 75, 100, 125, 150	66	50	23.5	24.5	8.5	Rc1/8	36	83	30	M5 depth 13	81	M6 depth 12
ø25	175, 200, 250, 300, 350, 400	66.5	50.5	24.5	25	9	Rc1/8	42	93	38	M6 depth 15	91	M6 depth 12

Code / Bore size (mm)	K	KA	MM	N	NN	KC	P: 30 or less	P: Over 30 to 100	P: Over 100 to 200	P: Over 200 to 300	P: Over 300	L	M
ø12	41	4.3 penetrating	6	14	M4 penetrating	7.5 spot face depth 4.5	20	40	110	200	—	9	12.5
ø16	46	4.3 penetrating	8	16	M5 penetrating	8 spot face depth 4.5	24	44	110	200	—	8.5	13
ø20	54	5.2 penetrating	10	18	M5 penetrating	9.5 spot face depth 5.5	24	44	120	200	300	13.5	14
ø25	64	5.2 penetrating	12	26	M6 penetrating	9.5 spot face depth 5.5	24	44	120	200	300	14.5	17

Code / Bore size (mm)	PA: 30 or less	PA: Over 30 to 100	PA: Over 100 to 200	PA: Over 200 to 300	PA: Over 300	PP	R	S	U	V	W	WW	X	Y
ø12	28	38	73	118	—	18	8	17	48	18	23	50	13 $^{0}_{-1.5}$	7.5
ø16	30	40	73	118	—	18	10	18	54	22	24	56	13 $^{0}_{-1.5}$	7.5
ø20	42	52	90	130	180	30	11	25	70	24	28	72	16 $^{0}_{-2}$	9.5
ø25	42	52	90	130	180	30	14	29	78	30	34	82	16 $^{0}_{-2}$	9.5

Code / Bore size (mm)	RD: T0H/V, T5H/V T2H/V, T3H/V	RD: T2WH/V T3WH/V	HD: T0H/V, T5H/V T2H/V, T3H/V	HD: T2WH/V T3WH/V	XA	XB
ø12	18	20	5	7	3	3.5
ø16	17	19	10	12	3	3.5
ø20	22.5	24.5	8.5	10.5	3	3.5
ø25	23	25	8.5	10.5	4	4.5

*1: When using a custom stroke length, the total dimensions are the same as the longer standard stroke length.
*2: Refer to page 222 for RD, HD and protruding dimensions of the 2-color display (except for T2WH/V and T3WH/V), off-delay, AC magnetic field proof, T1H/V and T8H/V switches.

Code / Bore size (mm)	AA: 30 or less	AA: Over 30 to 100	AA: Over 100	Q	O: 30 or less	O: Over 30 to 100	O: Over 100
ø12	55	55	85	6	0	0	30
ø16	59	65	95	8	0	6	36

Code / Bore size (mm)	AA: 30 or less	AA: Over 30 to 100	AA: Over 100 to 200	AA: Over 200	Q	O: 30 or less	O: Over 30 to 100	O: Over 100 to 200	O: Over 200
ø20	66	78	100	122	10	0	12	34	56
ø25	66.5	84	103	122	13	0	17.5	36.5	55.5

Dimensions (ø32/ø40/ø50/ø63)

CAD

● STG-B-32, 40, 50, 63

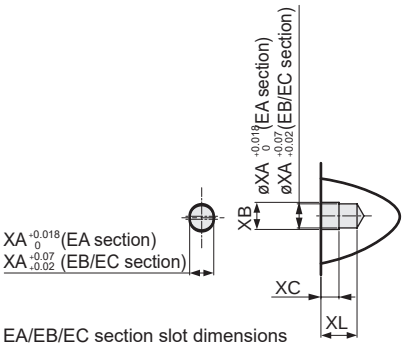

EA/EB/EC section slot dimensions

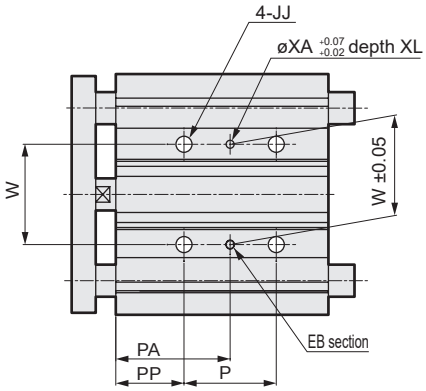

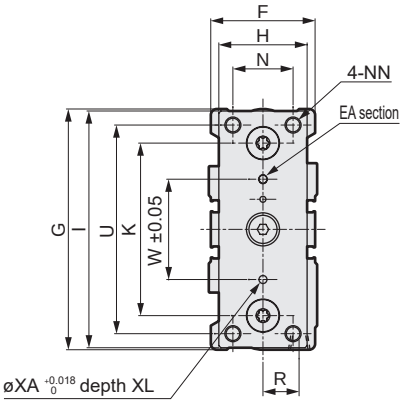

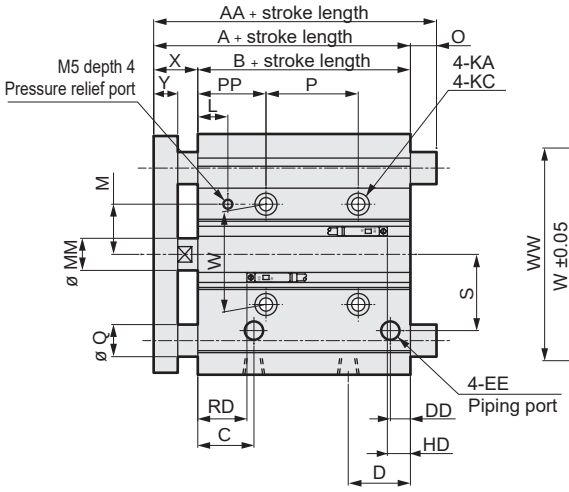

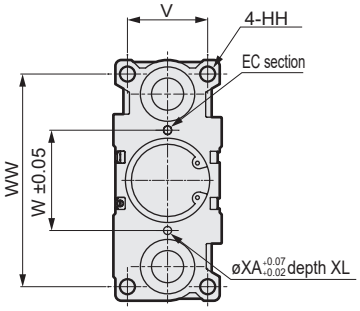

Code / Bore size (mm)	Standard stroke length (mm)	A	B	C	D	DD	EE	F	G	H	HH	I	JJ
ø32	25, 50, 75, 100, 125, 150, 175, 200, 250, 300, 350, 400	71.5	49.5	24.5	30.5	9	Rc1/8	48	112	44	M8 depth 20	110	M8 depth 16
ø40		78	56	26	31	10	Rc1/8	54	120	44	M8 depth 20	118	M8 depth 16
ø50		83	55	25	35	11	Rc1/4	64	148	60	M10 depth 22	146	M10 depth 20
ø63		88	60	27.5	35	15	Rc1/4	78	162	70	M10 depth 22	158	M10 depth 20

Code / Bore size (mm)	K	KA	KC	MM	N	NN	P: 25 or less	P: Over 25 to 100	P: Over 100 to 200	P: Over 200 to 300	P: Over 300	L	M
ø32	78	6.3 penetrating	11 spot face depth 7.5	16	30	M8 penetrating	24	48	124	200	300	14.5	21
ø40	86	6.3 penetrating	11 spot face depth 7.5	16	30	M8 penetrating	24	48	124	200	300	15	25
ø50	110	8.6 penetrating	14 spot face depth 9	20	40	M10 penetrating	24	48	124	200	300	14	33
ø63	124	8.6 penetrating	14 spot face depth 9	20	50	M10 penetrating	28	52	128	200	300	14.5	40

Code / Bore size (mm)	PA: 25 or less	PA: Over 25 to 100	PA: Over 100 to 200	PA: Over 200 to 300	PA: Over 300	PP	R	S	U	V	W	WW	X	Y
ø32	45	57	95	133	183	33	15	34	96	34	42	98	22 $^{0}_{-2}$	11.5
ø40	46	58	96	134	184	34	18	38	104	40	50	106	22 $^{0}_{-2}$	11.5
ø50	47	59	97	135	185	35	21.5	47	130	46	66	130	28 $^{0}_{-2}$	15.5
ø63	49	61	99	135	185	35	28	55	130	58	80	142	28 $^{0}_{-2}$	15.5

Code / Bore size (mm)	RD: T0H/V, T5H/V T2H/V, T3H/V	RD: T2WH/V T3WH/V	HD: T0H/V, T5H/V T2H/V, T3H/V	HD: T2WH/V T3WH/V	XA	XB	XC	XL
ø32	22	24	8.5	10.5	4	4.5	3	6
ø40	25	27	12	14	4	4.5	3	6
ø50	24.5	26.5	11.5	13.5	5	6	4	8
ø63	25	27	16	18	5	6	4	8

*1: When using a custom stroke length, the total dimensions are the same as the longer standard stroke length.
*2: Refer to page 222 for RD, HD and protruding dimensions of the 2-color display (except for T2WH/V and T3WH/V) , off-delay, AC magnetic field proof, T1H/V and T8H/V switches.

Code / Bore size (mm)	AA: 50 or less	AA: Over 50 to 100	AA: Over 100 to 200	AA: Over 200	Q	O: 50 or less	O: Over 50 to 100	O: Over 100 to 200	O: Over 200
ø32	79	98	118	140	16	7.5	26.5	46.5	68.5
ø40	79	98	118	140	16	1	20	40	62
ø50	91	114	134	161	20	8	31	51	78
ø63	91	114	134	161	20	3	26	46	73

SCPD3
SCM
SSD2
MDC2
SMG
LCM
LCR
LCG
LCX
STM
STG
STR2
MRL2
GRC
Cylinder switch
MN3E MN4E
4GA/B
M4GA/B
MN4GA/B
F.R (module unit)
Clean F.R
Precision R
Press gauge Diff. press gauge
Electro-pneumatic R
Speed controller
Auxiliary valve
Fitting/ tube
Clean air unit
Pressure sensor
Flow rate sensor
Valve for air blow
Ending

Common dimensions (Switches of 2-color display, off-delay, AC magnetic field, T8H/V and T1H/V)

● STG-B-**-**-T$^{2}_{3}$YH/V, T2JH/V, T8H/V

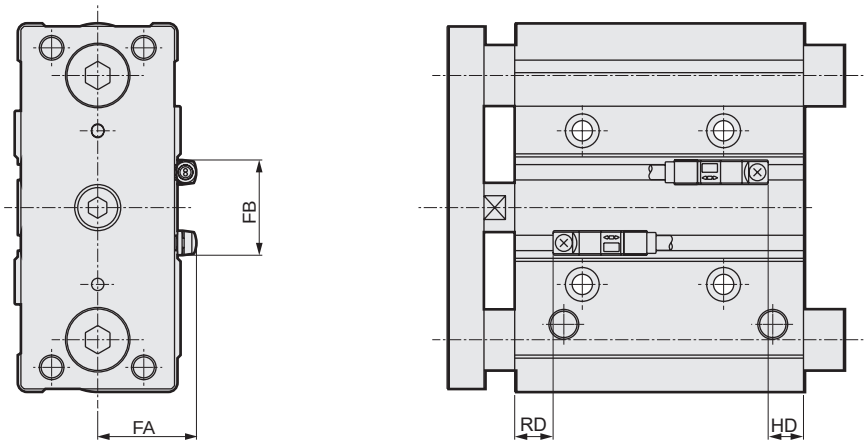

Code / Bore size (mm)	FA	FB	RD		HD	
			T*YH/V, T2JH/V	T8H/V	T*YH/V, T2JH/V	T8H/V
ø12	19	16	17	- (*1)	4	- (*1)
ø16	21	16	16	- (*1)	9	- (*1)
ø20	24	16	21.5	16.5	7.5	2.5
ø25	27	17	22	17	7.5	2.5
ø32	30	24	21	16	8	2.5
ø40	33	31	24	19	11	6
ø50	38	32	23.5	18.5	10.5	5.5
ø63	45	32	24	19	15	10

*1: T8H/V switch cannot be installed on STG-B-12, 16-P7..

● STG-B-**-**-T2YD*, T1H/V

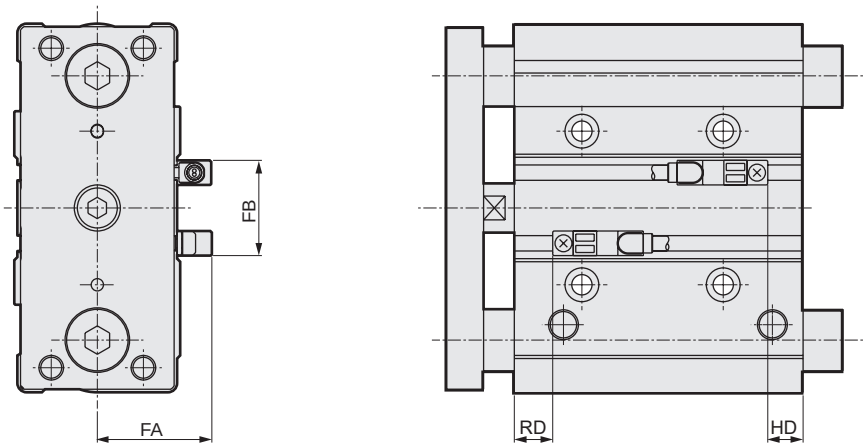

Code / Bore size (mm)	FA	FB	RD	HD
			STG-P7*	STG STG-P7*
ø12	24	16	17	4
ø16	26	16	16	9
ø20	29	16	21.5	7.5
ø25	32	17	22	7.5
ø32	35	24	21	8
ø40	38	31	24	11
ø50	43	32	23.5	10.5
ø63	50	32	24	15

MEMO

As the selection conditions are different from those of general air cylinders, confirm whether the model is adequate or not according to selection guide.

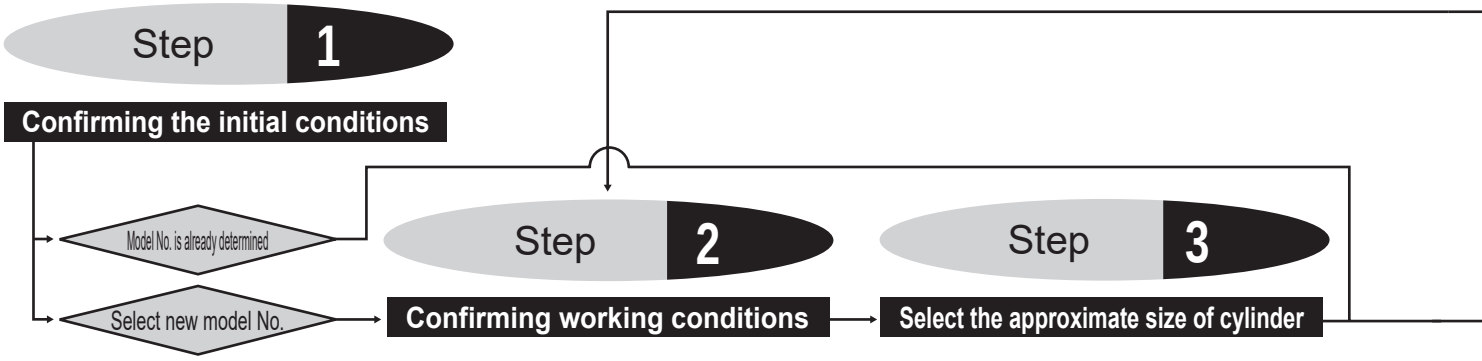

Step 2 Confirming working conditions

1. Working pressure P (MPa)
2. Total applied load W (N)

[Total applied load]

When determining the total applied load, take into account the weight of the movable part weight of the cylinder body.

W = (Applied load) + (Jig load) + (weight of movable part: Fa).

Calculate the weight of the movable part by using the value in movable part weight table on page 230.

Fa = Ma × 10

Ma: Movable part weight (kg)

Fa: Weight of movable part (N)

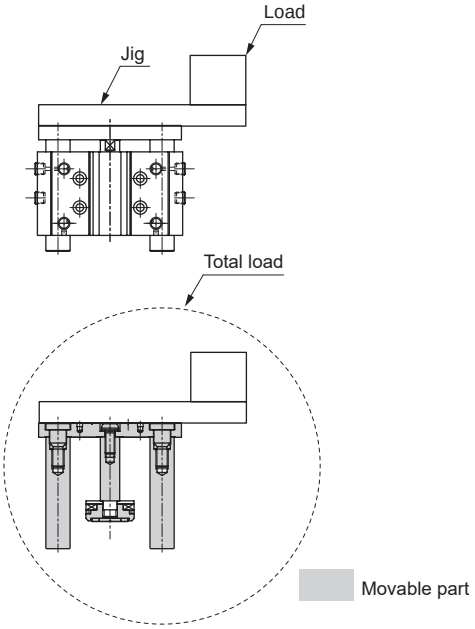

3. Mounting orientation

[Actuation]

Horizontal, vertical-rise, vertical-decline

4. Stroke length L (mm)
5. Operation time t (s)
6. Operation speed V (mm/s)

Formula of the cylinder's average operation speed Va

Va = L /t (mm/s)

Step 3 Select the approximate size of cylinder

● Formula for calculating cylinder size (bore size)

$F = \pi/4 \times D^2 \times P$

$\therefore D = \sqrt{4F/\pi P}$

D: Cylinder bore size (mm)

P: Working pressure (MPa)

F: Cylinder theoretical thrust (N)

● When calculating from the theoretical thrust value in Table 1

Approximate required thrust ≥ Applied load × 2

("× 2" in "Applied load × 2" is for when the load factor is approx. 50% as a safety coefficient)

[Example] Working pressure = 0.5 (MPa)

Applied load 25 (N)

Required thrust is 25 (N) x 2 = 50 (N)

When selecting the tube bore size with theoretical thrust of 50 N and over at working pressure of 0.5 MPa from Table 1, it will be ø 12 and over.

D = ø12

[Cylinder theoretical thrust]

Table 1. Cylinder theoretical thrust table

Theoretical thrust table ø12, ø16 Unit: N

Actuation direction	Pressure MPa	Bore size mm	
		ø12	ø16
Push	0.15	17	22.6
	0.2	22.6	30.2
	0.3	33.9	45.2
	0.4	45.2	60.3
	0.5	56.6	75.4
	0.6	67.8	90.5
	0.7	79.1	106
	0.8	90.4	121
	0.9	101.8	136

* Refer to page 216 for theoretical thrust table.

SCPD3
SCM
SSD2
MDC2
SMG
LCM
LCR
LCG
LCX
STM
STG
STR2
MRL2
GRC
Cylinder Switch
MN3E MN4E
4GA/B
M4GA/B
MN4GA/B
F.R.(module unit)
Clean F.R
Precision R
Press gauge Diff. press gauge
Electro-pneumatic R
Speed controller
Auxiliary valve
Fitting/ tube
Clean air unit
Pressure sensor
Flow rate sensor
Valve for air blow
Ending

Step 4

Calculate the total applied load (W) and each moment

To the next page

Step 4 Calculate the total applied load (W) and each moment

● Calculate the static load (Wo) and the moment (m) of the load, which is dependent on how the cylinder is mounted.

W_0 = (Applied load) + (Jig load) (N)

$M_1 = F_1 \times \ell_1$ (N·m)

$M_2 = F_2 \times \ell_2$ (N·m)

$M_3 = F_3 \times \ell_3$ (N·m)

For values of F_1, F_2 and F_3, use those shown in Fig. 2.

Fig. 2. Formula for calculating each moment
Calculate each moment from total applied load, inertia force coefficient and eccentric distance.

[Bending moment]

$$M_1 = F_1 \times \ell_1 = 10 \times m_1 \times G \times \ell_1$$

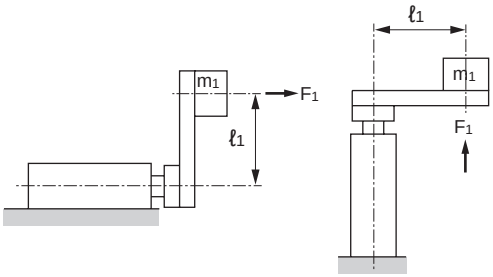

[Radial moment]

$$M_2 = F_2 \times \ell_2 = 10 \times m_2 \times G \times \ell_2$$

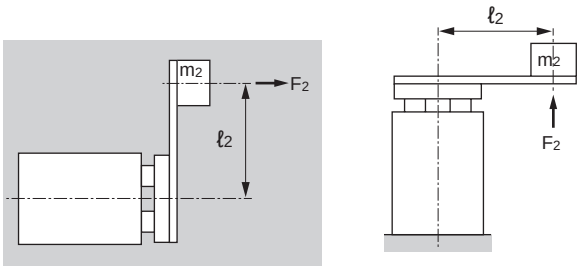

[Torsion moment]

$$M_3 = F_3 \times \ell_3 = 10 \times m_3 \times \ell_3$$

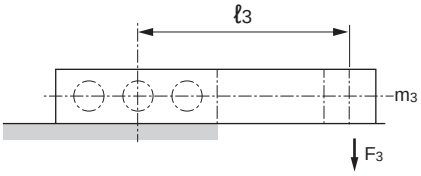

m_1: m_2: m_3: Load weight (kg)

ℓ_1: ℓ_2: ℓ_3: Eccentric distance (m)

G: Inertia force coefficient (Fig. 3)

Fig. 3. Trend of inertia force coefficient for guided cylinder

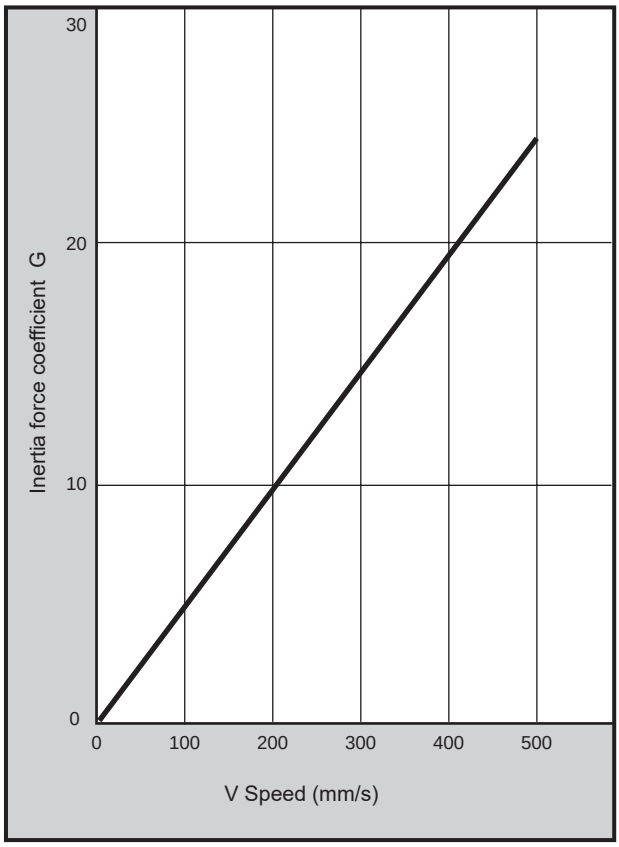

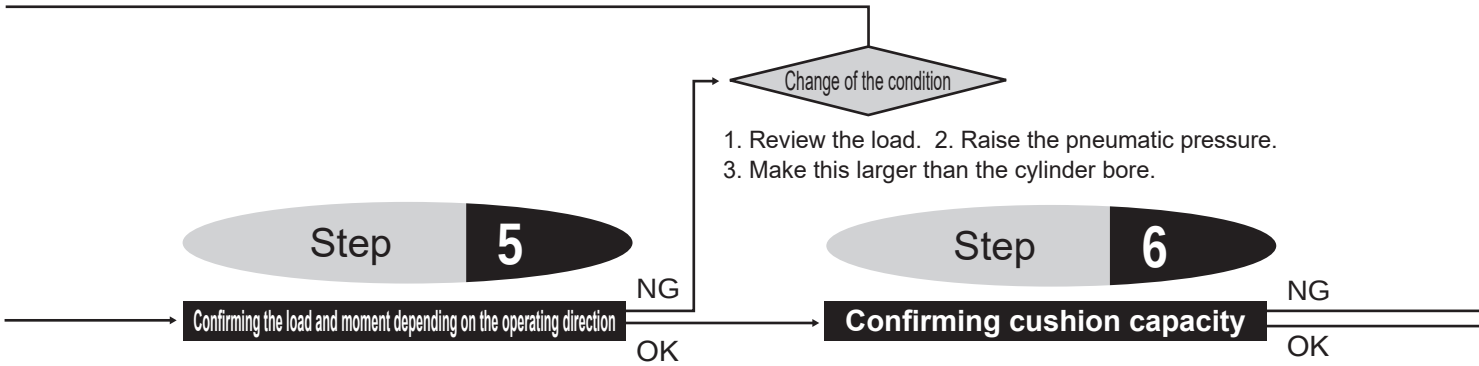

Step 5 Confirming the load and moment depending on the operating direction

5−1 Confirming applied load

❶ For horizontal operation

The value of applied static load must be the allowable load or less.

Applied static load W_0 — Value obtained in Step 4

Allowable lateral load Wmax — Select from Table 2 or graph according to the stroke length

(when using custom stroke length, select the longer standard stroke length)

$W_0 \leq Wmax$

Table 2. Allowable lateral load

Unit: N

Bore size (mm)	Stroke length (mm)			
	10	20	25	30
ø12	38	27		22
ø16	49	35		29
ø20		52		42
ø25		81		66
ø32			171	

* Refer to page 230 for allowable lateral load. When using an eccentric load, refer to the graph on page 232.

❷ For vertical operation

The total applied load value must be the value obtained by applying the load factor to the theoretical thrust

● Calculation of load factor

Total applied load W — Value obtained in Step 2

Theoretical thrust of cylinder F — Select from the theoretical thrust table on page 216 depending on the pressure

$\alpha = W/F \times 100$ (%)

● Determine the load factor by taking into account the status of utilization such as stability margin and service life of the cylinder. For general use, the value within the range in Table 3 is desirable.

Table 3. Appropriate range of load factor (reference value)

Working pressure (MPa)	Load factor (%)
0.1 to 0.3	$\alpha \leqq 40$
0.3 to 0.6	$\alpha \leqq 50$
0.6 to 1.0	$\alpha \leqq 60$

● Confirm the following when eccentric load is applied

The value must be the allowable load value or less from the graph of eccentric distance and load weight on pages 228 and 229

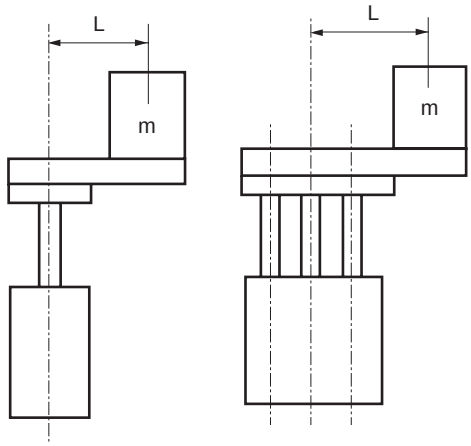

5-2 Confirming the static moment

❶ Divide the value of bending moment and radial moment by the value in Table 4 to obtain the moment ratio and check that the total value of the moment ratio is 1.0 or less.

● Calculation of moment ratio

Bending moment M_1 } Value obtained
Radial moment M_2 } in Step 4

$M_1 / M_1max + M_2 / M_2max \leq 1.0$

Condition changes

1. Install an external shock absorber.
2. Decrease the operation speed.
3. Use a cylinder with larger bore size

Selection complete

Table 4. Allowable moment (N·m)

Bore size (mm)	Allowable bending moment M1, M2 (N·m)
ø12	7.0
ø16	11.2
ø20	19.2
ø25	35.3
ø32	51.9
ø40	51.9
ø50	171.5
ø63	171.5

❷ The torsion moment must be the allowable torque value or less.

Torsion moment M3 Value obtained in Step 4

Allowable torque

M3max Select from Table 5 according to the stroke (When using a custom stroke length, select the longer standard stroke length)

$M_3 \leq M_{3max}$

Table 5. Allowable torque (N·m)

Bore size (mm)	Stroke length (mm)		
	10	20	25
ø12	0.39	0.28	
ø16	0.56	0.41	
ø20		0.70	
ø25		1.29	
ø32			3.33
ø40			3.68
ø50			4.99
ø63			5.63

* Refer to page 230 for allowable torque.

Step 6 CONFIRMING CUSHION FACULTY

Calculate the kinetic energy of the load that is actually to be used, and confirm whether it can be absorbed by the allowable absorbed energy of cylinder or not.

- To obtain the allowable absorbed energy of cylinder (E), use the value in the graphs below.
- Formula for calculating the kinetic energy of load

$$E = \frac{1}{2} \times (W1 + W2) \times V^2$$

W1: Applied load (kg) W2: Movable part weight of cylinder (kg)

V: Cylinder speed (m/s)

Allowable absorbed energy value

Use the product in the range of the lower-left side of the curve. For use in the upper right range, provide an external shock absorber.

● STG-12 to 25

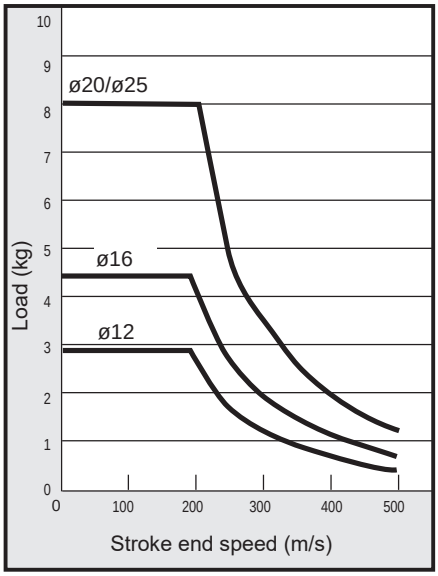

● STG-32 to 50

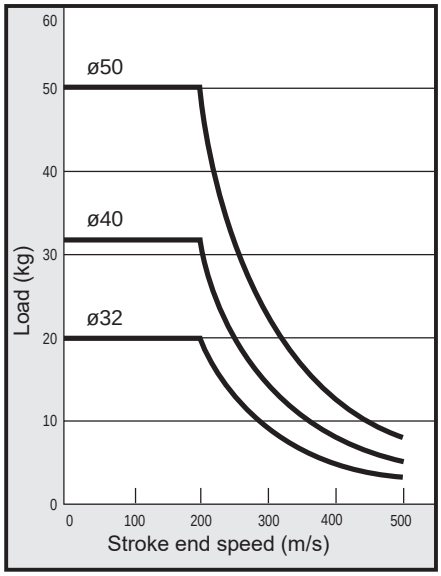

● STG-63

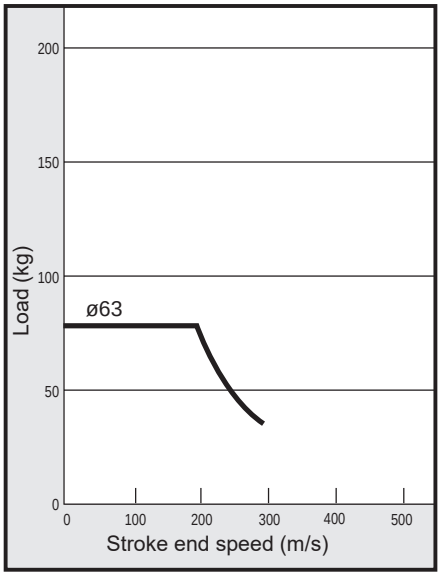

Selection guide

In case of vertical installation

- As for the total load weight, select the tube inner diameter so that the ratio of the load to the theoretical thrust is within the values in the table below.

Bore size	Load factor for the theoretical thrust
12, 16	40% or less
20, 25	50% or less
32 to 80	60% or less
100	60% or less

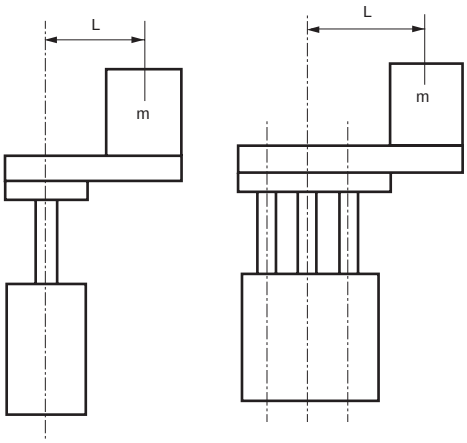

● STG-B-12 to 25

• Stroke length of 30 mm or less

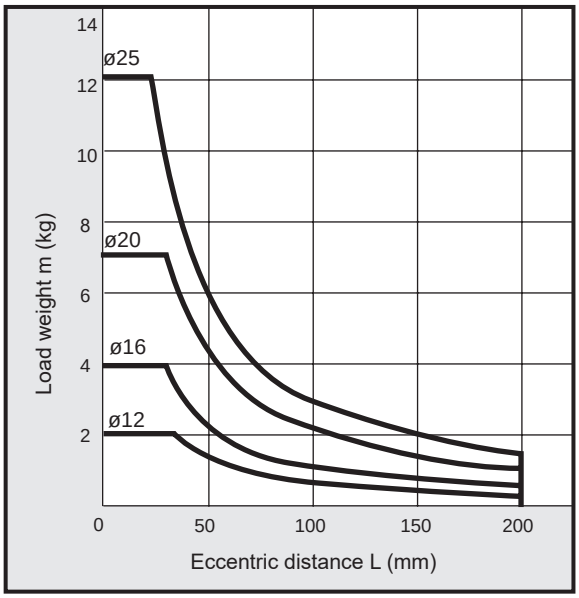

● STG-B-32 to 63

• Stroke length of 50 mm or less

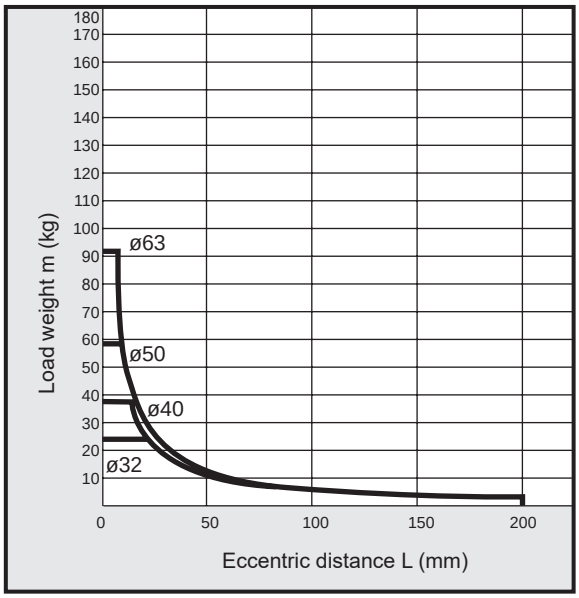

● STG-B-12 to 25

• Over 30 mm to 100 mm stroke length

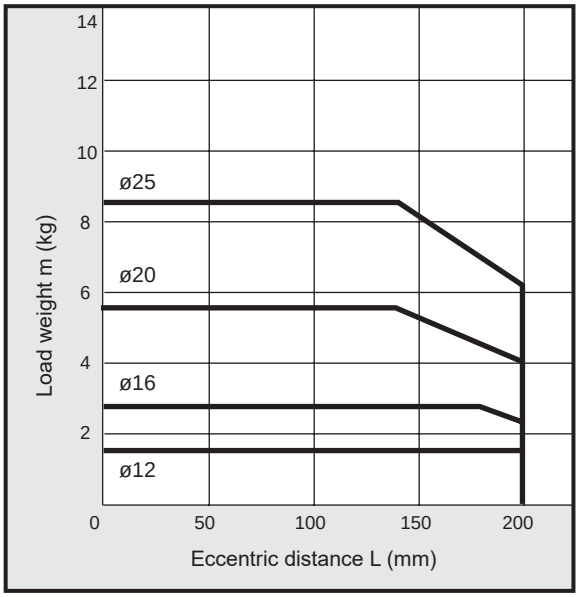

● STG-B-32 to 63

• Over 50 mm to 100 mm stroke length • Over 50 mm to 200 mm stroke length

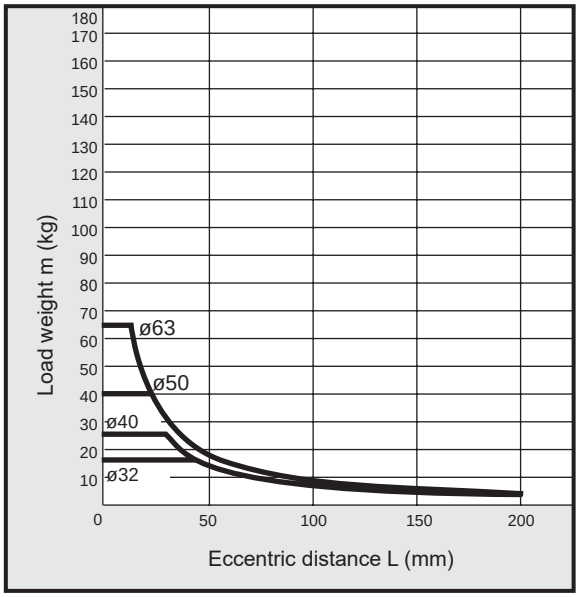

● STG-B-12 to 25
• Over 100 mm stroke length

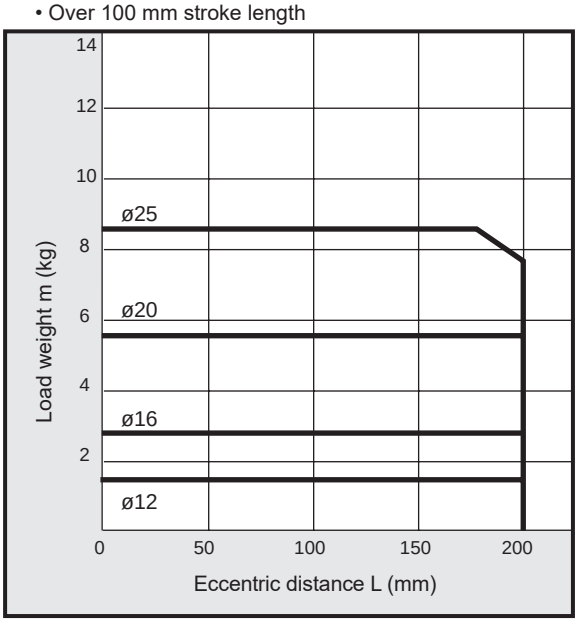

● STG-B-32 to 63
• Over 100 mm stroke length • Over 200 mm stroke length

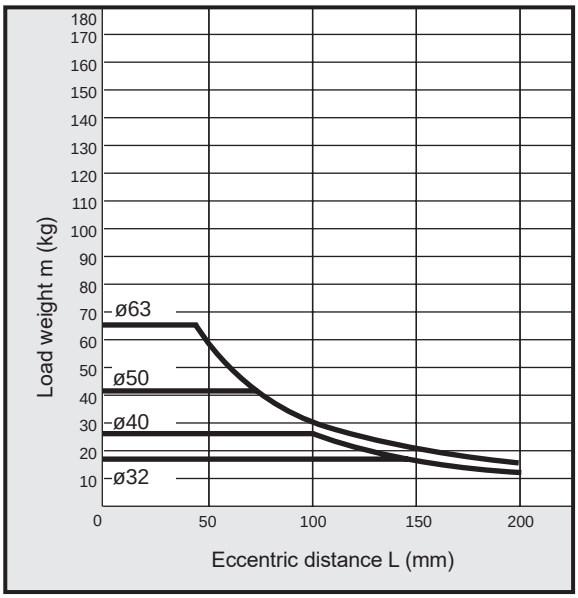

Deflection

For the runout amount δ that is produced at the end of the end plate when no load is applied, the value in the graph below is used as a guide. (Excluding deflection of guide rod)

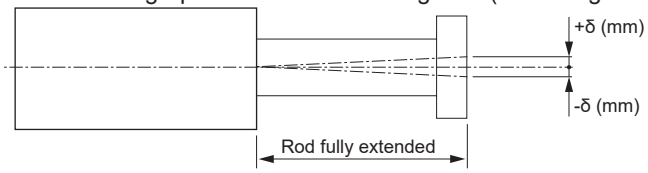

● ø12, ø16

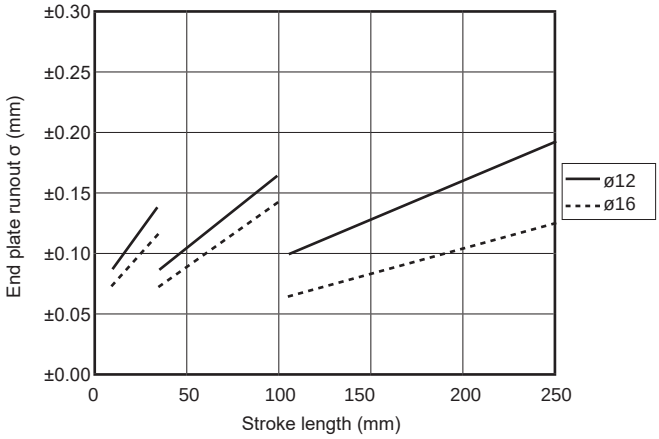

● ø20 to ø40

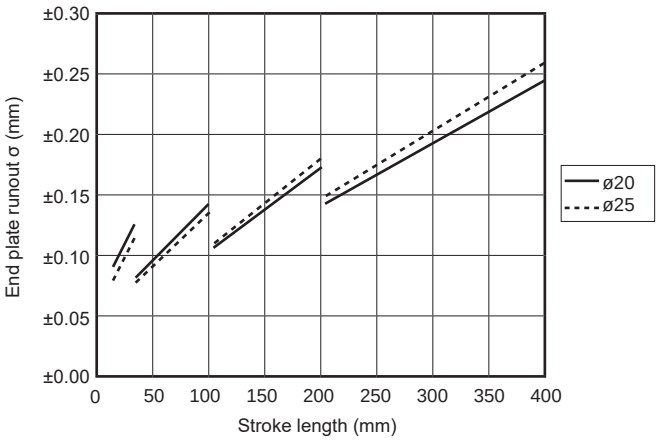

● ø50 to ø63

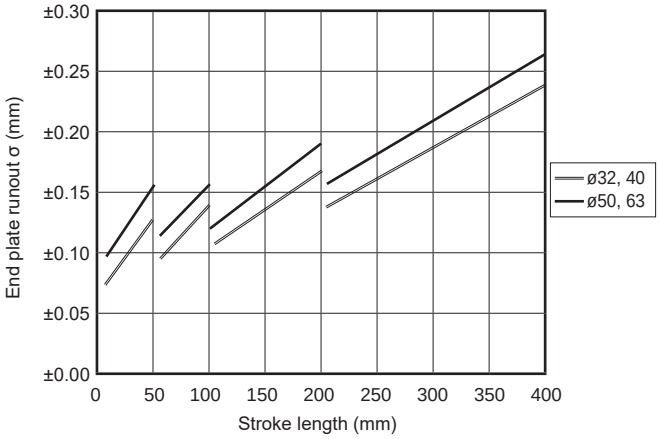

Selection guide

Allowable lateral load

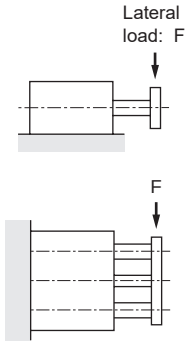

Unit: N

Bore size (mm)	Stroke length (mm)						
	10	20	25	30	40	50	75
ø12	38	27		22	34	29	21
ø16	49	35		29	50	43	31
ø20		52		42	76	65	49
ø25		81		66	108	94	70
ø32			171			120	190
ø40			171			120	190
ø50			181			129	215
ø63			181			129	215

*1: For copper and PTFE free, only for M: metal bush bearing, design the cylinder with the allowable value in the table above × 0.7.

Allowable torque

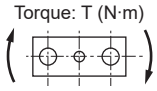

Unit: N·m

Bore size (mm)	Stroke length (mm)						
	10	20	25	30	40	50	75
ø12	0.39	0.28		0.23	0.35	0.30	0.21
ø16	0.56	0.41		0.33	0.58	0.50	0.36
ø20		0.70		0.57	1.02	0.88	0.66
ø25		1.29		1.06	1.74	1.50	1.13
ø32			3.33			2.34	3.70
ø40			3.68			2.58	4.08
ø50			4.99			3.56	5.90
ø63			5.63			4.01	6.66

Non-rotating accuracy

(reference value)

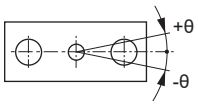

Movable part weight table

Unit: kg

Bore size (mm)	Stroke length (mm)															
	10	20	25	30	40	50	75	100	125	150	175	200	250	300	350	400
ø12	0.11	0.11		0.12	0.13	0.14	0.16	0.17	0.20	0.22	0.23	0.25	0.29			
ø16	0.15	0.16		0.17	0.20	0.21	0.24	0.27	0.32	0.35	0.38	0.41	0.47			
ø20		0.31		0.33	0.37	0.39	0.44	0.48	0.56	0.60	0.65	0.70	0.80	0.90	1.00	1.09
ø25		0.49		0.52	0.58	0.61	0.69	0.76	0.88	0.95	1.02	1.10	1.28	1.44	1.58	1.72
ø32			0.82			0.94	1.11	1.23	1.40	1.53	1.65	1.77	2.07	2.30	2.54	2.78
ø40			0.89			1.01	1.18	1.30	1.48	1.60	1.72	1.83	2.14	2.38	2.61	2.84
ø50			1.77			1.95	2.24	2.45	2.71	1.89	3.08	3.27	3.76	4.13	4.50	4.87
ø63			2.11			2.30	2.59	2.77	3.05	3.25	3.43	3.61	4.11	4.48	4.84	5.21

Unit: N

	Stroke length (mm)								
	100	125	150	175	200	250	300	350	400
	16	12	11	9	8	6			
	25	20	17	15	13	10			
	38	60	51	44	39	32	27	23	20
	56	81	69	60	53	42	36	30	27
	159	123	106	93	83	66	56	48	42
	159	123	106	93	83	66	56	48	42
	181	139	121	106	95	78	67	58	50
	181	139	121	106	95	78	67	58	50

Unit: N·m

	Stroke length (mm)								
	100	125	150	175	200	250	300	350	400
	0.17	0.13	0.11	0.09	0.08	0.07			
	0.28	0.23	0.19	0.17	0.15	0.12			
	0.52	0.80	0.69	0.60	0.53	0.43	0.36	0.31	0.27
	0.90	1.29	1.11	0.96	0.85	0.68	0.57	0.49	0.42
	3.10	2.40	2.07	1.82	1.61	1.29	1.09	0.94	0.82
	3.42	2.65	2.28	2.00	1.78	1.43	1.20	1.03	0.90
	4.99	3.83	3.32	2.93	2.61	2.16	1.83	1.58	1.39
	5.62	4.32	3.75	3.30	2.94	2.43	2.06	1.78	1.57

Descriptions / Bore size (mm)	Non-rotating accuracy θ (degree)
ø12	±0.06
ø16	
ø20	±0.05
ø25	
ø32	±0.04
ø40	
ø50	±0.03
ø63	

(Default at PULL) Note: Excluding deflection of guide rod

SCPD3
SCM
SSD2
MDC2
SMG
LCM
LCR
LCG
LCX
STM
STG
STR2
MRL2
GRC
Cylinder switch
MN3E MN4E
4GA/B
M4GA/B
MN4GA/B
F.R (module unit)
Clean F.R
Precision R
Press gauge Diff. press gauge
Electro-pneumatic R
Speed controller
Auxiliary valve
Fitting/ tube
Clean air unit
Pressure sensor
Flow rate sensor
Valve for air blow
Ending

Allowable lateral load

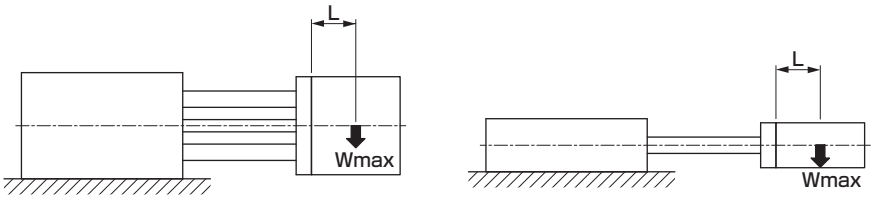

Wmax: Lateral load (kg)
L: Position of center of gravity of load (mm)

STG-B-12 to 25

● For L=50mm

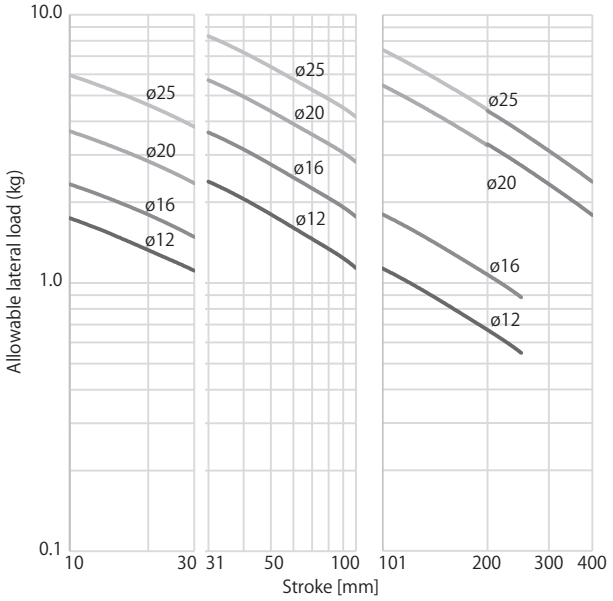

● For L=100mm

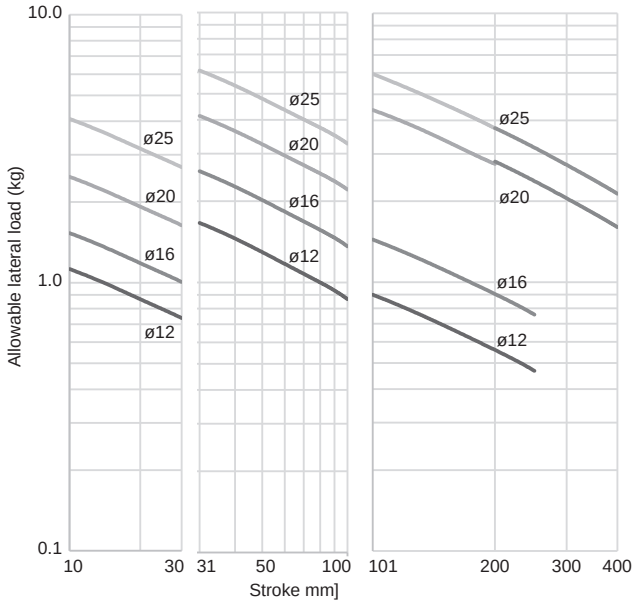

STG-B-32 to 63

● For L=50mm

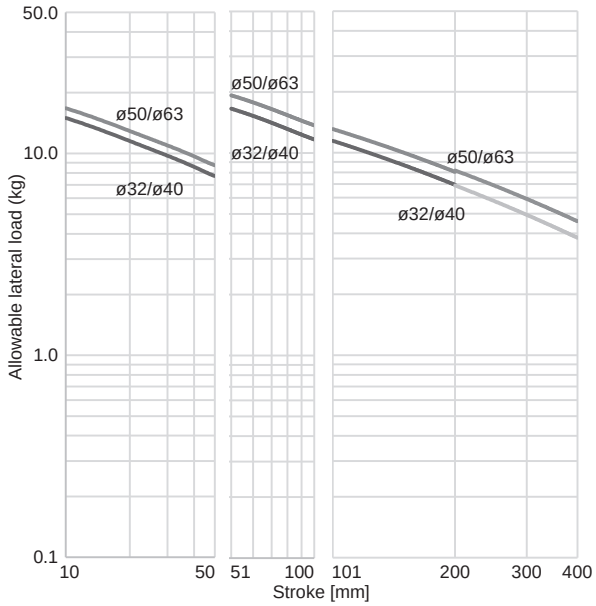

● For L=100mm

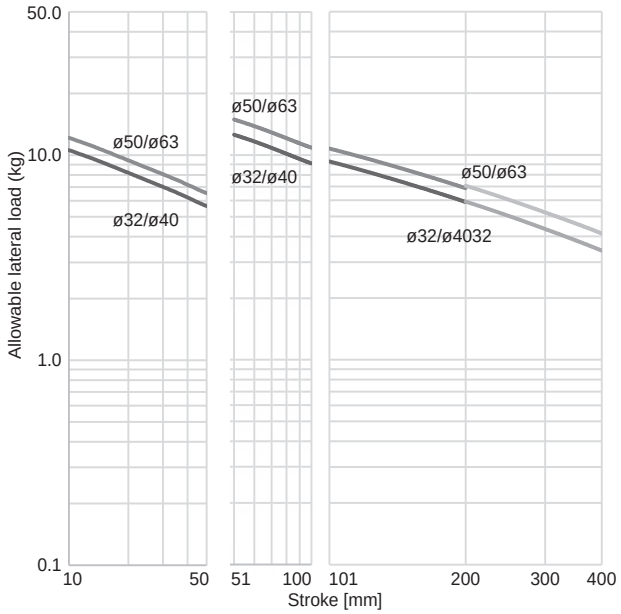

Pneumatic components

Safety Precautions

Be sure to read this section before use.
Refer to page 2 for general information on the cylinder, and to page 320 for general information on the cylinder switch.

Guided cylinder STG-B Series

Mounting, installation & adjustment

CAUTION

■ Be sure to attach a speed controller during piping before use. The applicable fittings are as below.

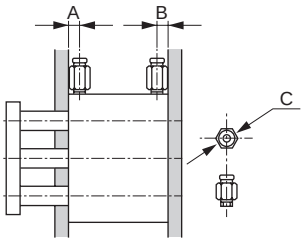

Item / Bore size (mm)	Port size	Port position dimensions A	Port position dimensions B	Applicable fittings	Fitting O.D. øC
ø12	M5×0.8	12	7	SC3W-M5-4-P7* SC3W-M5-6-P7* GWS4-M5-S-P7* GWS4-M5-P7* GWL4-M5-P7* GWL6-M5-P7* GWS6-M5-P7*	ø12 or less
ø16		12	7.5		
ø20	Rc1/8	10.5	8.5	SC3W-6-4/6/8-P7* GWS4-6-P7* GWS6-6-P7* GWS8-6-P7* GWL4-6-P7* GWL6-6-P7*	ø15 or less
ø25		11.5	9		
ø32		12.5	9		
ø40		14	10		
ø50	Rc1/4	14	11	SC3W-8-6/8/10-P7* GWS4-8-P7* GWS6-8-P7* GWS10-8-P7* GWS12-8-P7* GWL4 to 12-8-P7*	ø21 or less
ø63		16.5	15		

■ Do not damage surface flatness by denting or scratching the body (tube) mounting surface or the end plate surface. Make sure that the flatness of the mating surface where the end plate will be attached is, as a guideline, 0.03mm or below.

■ When mounting the body with the through bolt, tighten with tightening torque as shown in the table below.

ø12	1.5 to 2.7N•m
ø16	
ø20/ø25	3 to 5.4N•m
ø32/ø40	5.2 to 9.2N•m
ø50/ø63	12.5 to 22N•m

■ Allowable absorbed energy value

Use this cushion within the range of the allowable absorbed energy.When the unit will be used where the allowable absorbed energy will be exceeded, provide a separate external shock absorber. For details on the allowable absorbed energy value, refer to the specification field or selection guide.

■ Be sure to attach a speed controller during piping before use. The available fittings are as below.

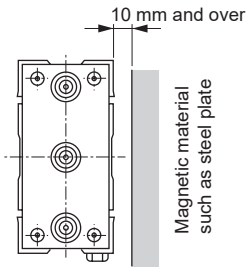

■ The cylinder switch may malfunction if cylinders are installed adjacently. Check that the following distances are provided between cylinders.(Same clearance for all bore sizes)

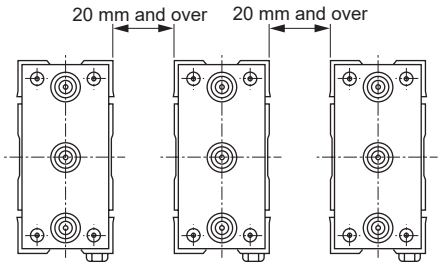

■ Do not rotate the piston rod unless you disassemble the product for maintenance, etc. Do not rotate the piston rod because misalignment may occur, which may cause unstable operation.

MEMO

STR2

Twin rod cylinder

ø6/ø10/ø16/ø20/ø25/ø32

Combined functions

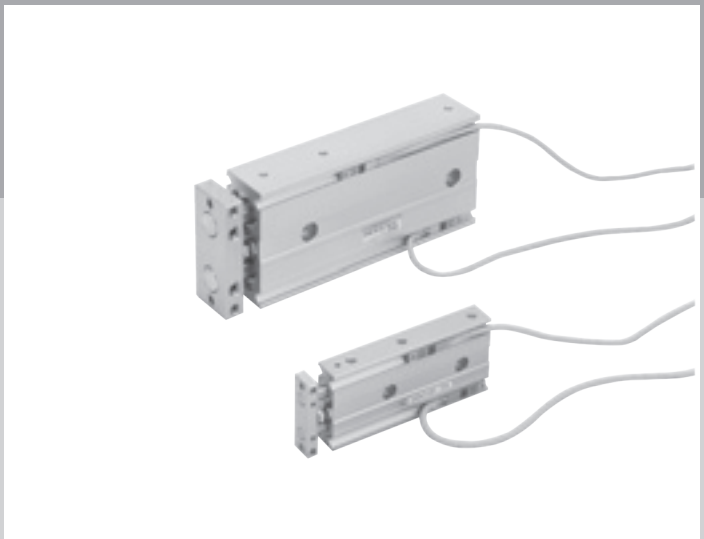

Overview

Guided twin rod cylinder for pick & place device. The twin rod mechanism can improve the non-rotating accuracy and also double the thrust.

Features

High level of non-rotating accuracy

The two single rod cylinders fixed to the end plate do not require the rotation-stop mechanism to provide a high level of non-rotating accuracy.

Space saving

The detection switch fits neatly into cylinder body. The simple design makes elegant use of space.

Ultracompact is available.

The ultracompact of ø6 bore size has been added to the series.
providing you with more choices.

Piping ports can be installed on either side.

Piping ports can be installed on the right or left side.
Connect pipes according to the configuration.

Easy to install

A reamed hole for parallel pin has been provided to facilitate the work when the cylinder is removed for maintenance.

CONTENTS

Variation and option selection table	238
● **Double acting/single rod (STR2-B)**	**240**
● **Double acting/fine speed (STR2-BF)**	**246**
Selection guide	250
Technical data	254
⚠ Safety precautions	257

SCPD3
SCM
SSD2
MDC2
SMG
LCM
LCR
LCG
LCX
STM
STG
STR2
MRL2
GRC
Cylinder switch
MN3E MN4E
4GA/B
M4GA/B
MN4GA/B
F.R (module unit)
Clean F.R
Precision R
Press gauge Diff. press gauge
Electro-pneumatic R
Speed controller
Auxiliary valve
Fitting/ tube
Clean air unit
Pressure sensor
Flow rate sensor
Valve for air blow
Ending

Variation and option selection table

◎ : Option variation (check category 2)
○ : C5 compatible (check category 3)
△ : Available depending on conditions (estimation)
: Not available

			Clean room specifications			
			Exhaust treatment	Vacuum treatment	Exhaust treatment	Vacuum treatment
		Code	P72	P73	P52	P53
Variation	Double acting basic (ball bearing)	B	◎	◎	○	○
	Fine speed	F	○	○		
	Double rod	D	○	○	○	○
	Position locking	Q	△	△	△	△
	Low speed	O	○	○		
Port thread	NPT1/8 (ø32)	N	○	○	○	○
	G 1/8 (ø32)	G	○	○	○	○
Option	End plate material: steel	F	○	○	○	○
	Piping port position on the 180° opposite side	O	◎	◎	○	○
	Rear piping	R				

MEMO

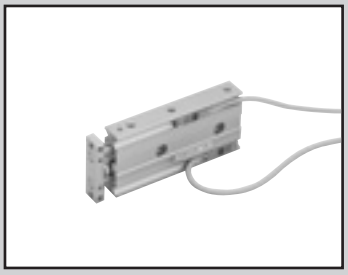

Twin rod cylinder Double acting/standard

STR2-B Series

● Bore size: ø6/ø10/ø16/ø20/ø25/ø32

JIS symbol

RoHS CAD

Structure and material restriction

	Structure	Material restriction			Model No.
P7 Series	Exhaust treatment				P72
	Vacuum treatment				P73
P5 Series	Exhaust treatment	Copper-based materials prohibited	Silicon-based materials prohibited	Halogen-based materials prohibited (fluorine, chlorine, bromine)	P52
	Vacuum treatment	Copper-based materials prohibited	Silicon-based materials prohibited	Halogen-based materials prohibited (fluorine, chlorine, bromine)	P53

Specifications

Descriptions		STR2-B-P7*/P5*					
Bore size mm		ø6	ø10	ø16	ø20	ø25	ø32
Actuation		Double acting					
Working fluid		Compressed air					
Max. working pressure MPa		0.7 (≈100 psi, 7 bar)					
Min. working pressure MPa		0.2*	0.15**	0.1 (≈15 psi, 1 bar)			
Proof pressure MPa		1.05 (≈150 psi, 10.5 bar)					
Ambient temperature °C		-10 (14°F) to 60 (140°F) (no freezing)					
Port size		M5					Rc1/8
Port size (relief port)		M5					Rc1/8
Stroke tolerance mm		+2.0 0					
Adjustable stroke range mm		0 to -5					
Working piston speed mm/s		50 to 500					
Non-rotating accuracy		±0.2°	±0.1°			±0.3°	
Piston rod bearing		Ball bearing					
Cushion		Rubber cushion					
Lubrication		Not available					
Allowable energy absorption J	PUSH	0.008	0.061	0.181	0.303	0.68	1.3
	PULL	0.059	0.083	0.083	0.127	0.237	0.311

*0.2 (≈29 psi, 2 bar), **0.15 (≈22 psi, 1.5 bar)

Stroke length

Bore size	Stroke (mm)	Max. stroke (mm)	Available stroke (mm)	Min. stroke (mm)	Min. stroke with switch (mm)
ø6	10, 20, 30, 40, 50	50	Up to 100	5	10
ø10					
ø16	10, 20, 30, 40, 50 60, 70, 80, 90, 100	100 *1	Up to 200		
ø20					
ø25					
ø32					

*1: The custom stroke length is available by 1 mm increments.
However, the total length is the same as that of the next longer standard stroke length.

Theoretical thrust table

(Unit: N)

Bore size (mm)	Operating direction	Working pressure MPa							
		0.1	0.15	0.2	0.3	0.4	0.5	0.6	0.7
ø6	Push	-	-	11.3	17.0	22.6	28.3	33.9	39.6
	Pull	-	-	6.28	9.42	12.6	15.7	18.8	22.0
ø10	Push	-	23.6	31.4	47.1	62.8	78.5	94.2	1.10×10^2
	Pull	-	15.1	20.1	30.2	40.2	50.3	60.3	70.4
ø16	Push	40.2	60.3	80.4	1.21×10^2	1.61×10^2	2.01×10^2	2.41×10^2	2.81×10^2
	Pull	24.5	36.8	49.0	73.5	98.0	1.23×10^2	1.47×10^2	1.72×10^2
ø20	Push	62.8	94.2	1.26×10^2	1.88×10^2	2.51×10^2	3.14×10^2	3.77×10^2	4.40×10^2
	Pull	40.2	60.3	80.4	1.21×10^2	1.61×10^2	2.01×10^2	2.41×10^2	2.81×10^2
ø25	Push	98.2	1.47×10^2	1.96×10^2	2.95×10^2	3.93×10^2	4.91×10^2	5.89×10^2	6.87×10^2
	Pull	67.4	1.01×10^2	1.35×10^2	2.02×10^2	2.70×10^2	3.37×10^2	4.04×10^2	4.72×10^2
ø32	Push	1.61×10^2	2.41×10^2	3.22×10^2	4.83×10^2	6.43×10^2	8.04×10^2	9.65×10^2	1.13×10^3
	Pull	1.21×10^2	1.81×10^2	2.41×10^2	3.62×10^2	4.83×10^2	6.03×10^2	7.24×10^2	8.44×10^2

Switch specifications

● 1-color/2-color display

Descriptions	Proximity 2-wire		Proximity 3-wire			Reed 2-wire			
	K2H/K2V	K2YH/K2YV	K3H/K3V	K3PH/K3PV (custom order)	K3YH/K3YV	K0H/K0V		K5H/K5V	
Applications	Programmable controller		Programmable controller, relay			Programmable controller, relay		Programmable controller, relay IC circuit (without indicator lamp), serial connection	
Output method	-		NPN output	PNP output	NPN output	-			
Power supply voltage	-		10 to 28 VDC			-			
Load voltage	10 to 30 VDC		30 VDC or less			12/24 VDC	110 VAC	5/12/24 VDC	110 VAC
Load current	5 to 20 mA (*2)		50 mA or less			5 to 50 mA	7 to 20 mA	50 mA or less	20 mA or less
Indicator lamp	LED (Lit when ON)	Red/green LED (Lit when ON)	LED (Lit when ON)	Yellow LED (Lit when ON)	Red/green LED (Lit when ON)	LED (Lit when ON)		-	
Leakage current	1 mA or less		10 μA or less			0 mA			
Weight g	1 m: 18 3 m: 49 5 m: 80	1 m: 31 3 m: 85 5 m: 139	1 m: 18 3 m: 49 5 m: 80		1 m: 31 3 m: 85 5 m: 139	1 m: 18 3 m: 49 5 m: 80			

*1: Refer to page 309 for detailed switch specifications and Dimensions.
*2: Max. load current: 20mA at 25°C.The current is lower than 25 mA if the operating ambient temperature around the switch is higher than 20˚C. (60 to 5 mA at 10°C)

Cylinder weight

Unit: g

Bore size	Weight for 0 mm stroke length STR2-B	Additional weight per S = 10 mm
ø6	74	10
ø10	169	14
ø16	320	20
ø20	445	40
ø25	662	52
ø32	1233	83

(Example) Product weight

STR2-B-6-10-K2H-D-P7*

- Product weight for 0 mm stroke length..... 74 g
- Additional weight for stroke length 10 mm.....10 g × 1 = 10 g
- Weight of 2 cylinder switches. .....18 g × 2 = 36 g
- Product weight.....74g + 10g + 36 g = 120 g

SCPD3
SCM
SSD2
MDC2
SMG
LCM
LCR
LCG
LCX
STM
STG
STR2
MRL2
GRC
Cylinder switch
MN3E MN4E
4GA/B
M4GA/B
MN4GA/B
F.R (module unit)
Clean F.R
Precision R
Press gauge Diff. press gauge
Electro-pneumatic R
Speed controller
Auxiliary valve
Fitting/ tube
Clean air unit
Pressure sensor
Flow rate sensor
Valve for air blow
Ending

How to order

Without switch (Magnet for switch incorporated)

STR2 - B - 16 - 30 ——— O P72

With switch (Magnet for switch incorporated)

STR2 - B - 16 - 30 - K0H - R - O P72

Model No.

Ⓐ Bearing

Ⓑ Bore size

Ⓒ Stroke length

■ The custom stroke length is available by 1 mm increments.

Ⓓ Switch model No. *1

Ⓔ Switch quantity

Ⓕ Option *2 *3

Ⓖ Clean room specifications

Code	Content
Ⓐ Bearing	
B	Ball bearing
Ⓑ Bore size (mm)	
6	ø6
10	ø10
16	ø16
20	ø20
25	ø25
32	ø32

Ⓒ Stroke (mm)

Bore size	Stroke	Available stroke	Custom stroke
ø6	5 to 50	Up to 100	By 1 mm increments
ø10	5 to 50	Up to 100	
ø16	5 to 100	Up to 200	
ø20	5 to 100	Up to 200	
ø25	5 to 100	Up to 200	
ø32	5 to 100	Up to 200	

Ⓓ Switch model No.

Lead wire straight	Lead wire L-shaped	Contact	Voltage AC	Voltage DC	Indicator	Lead wire
K0H*	K0V*	Reed	●	●	1-color display	2 wires
K5H*	K5V*		●	●	Without indicator lamp	
K2H*	K2V*	Proximity		●	1-color display	2 wires
K3H*	K3V*			●		3 wires
K3PH*	K3PV*			●	1-color display (custom order)	3 wires
K2YH*	K2YV*			●	2-color display	2 wires
K3YH*	K3YV*			●		3 wires

* Lead wire length	
Blank	1 m (standard)
3	3 m (option)
5	5 m (option)

Ⓔ Switch quantity	
R	1 (on rod end)
H	1 (on head end)
D	2

Ⓕ Option	
Blank	None
O	Piping port position on the 180° opposite side

Ⓖ Clean room specifications

	Structure	Material restriction
P72	Exhaust treatment	-
P73	Vacuum treatment	-
P52	Exhaust treatment	Copper-based/silicon-based/halogen-based materials (fluorine, chlorine, bromine) are prohibited
P53	Vacuum treatment	Copper-based/silicon-based/halogen-based materials (fluorine, chlorine, bromine) are prohibited

⚠ Precautions for model No. selection

*1: STR2-B-6 and 10 are not compatible with a reed switch.
Ⓓ Switches other than switch model No. are also available.
(custom order)
Refer to page 309 for the details.

*2: The piping port positions for "O" are as shown in the figure below.

Piping port positions for standard (blank)

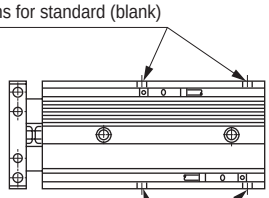

Piping port position on the 180° opposite side (code: O) piping port

*3: Refer to page 238 for combination of variations/ options.

[Example of model No.]

STR2-B-16-30-K0H-R-OP72

Model: Twin rod cylinder, standard

Ⓐ Bearing : Metal bush bearing
Ⓑ Bore size : ø16 mm
Ⓒ Stroke length : 30 mm
Ⓓ Switch model No. : Reed K0H switch/Lead wire 1 m
Ⓔ Switch quantity : 1 (on rod end)
Ⓕ Option : Piping port position on the 180° opposite side
Ⓖ Clean room specifications : Exhaust treatment

MEMO

SCPD3
SCM
SSD2
MDC2
SMG
LCM
LCR
LCG
LCX
STM
STG
STR2
MRL2
GRC
Cylinder switch
MN3E MN4E
4GA/B
M4GA/B
MN4GA/B
F.R (module unit)
Clean F.R
Precision R
Press gauge Diff. press gauge
Electro-pneumatic R
Speed controller
Auxiliary valve
Fitting/ tube
Clean air unit
Pressure sensor
Flow rate sensor
Valve for air blow
Ending

Dimensions

● STR2-B-P7*/P5*

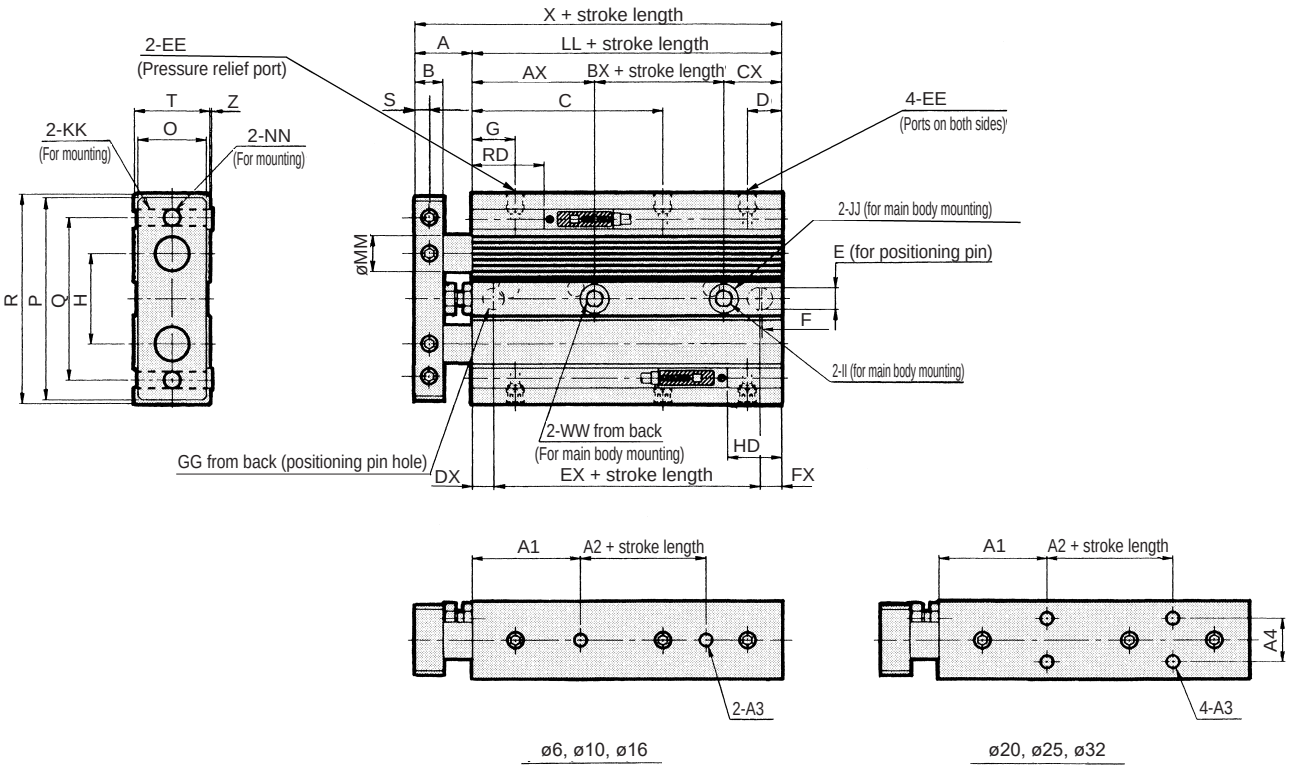

*1: When using a custom stroke length, the total length is the same as that of the next longer standard stroke length.
*2: Refer to page 245 for HD, RD and protruding dimensions of the 2-color display switch.

Code / Bore size (mm)	A	B	C	D	E	EE	F	G	GG	H	II	JJ	KK	LL	MM	NN	O
ø6	12	6	34.5	7.5	$4^{+0.07}_{+0.02}$ depth 3	M5	1	11	$4^{+0.07}_{+0.02}$ depth 3	14	ø3.4	6.5 spot face depth 3.3	M3 penetrating	54	4	M3 penetrating	11
ø10	14	6	45	7	$4^{+0.07}_{+0.02}$ depth 4	M5	1	15	$4^{+0.07}_{+0.02}$ depth 4	20	ø4.3	8 spot face depth 4.4	M4 penetrating	65	6	M4 penetrating	13
ø16	16	8	53	9.5	$6^{+0.07}_{+0.02}$ depth 6	M5	1	12	$6^{+0.07}_{+0.02}$ depth 6	25	ø4.3	8 spot face depth 4.4	M5 penetrating	76	10	M5 penetrating	19
ø20	20	10	56	9.5	$6^{+0.07}_{+0.02}$ depth 6	M5	1	12.5	$6^{+0.07}_{+0.02}$ depth 6	28	ø5.2	9.5 spot face depth 5.4	M5 penetrating	85	12	M5 penetrating	24
ø25	22	12	54	10.5	$6^{+0.07}_{+0.02}$ depth 6	M5	1	13.5	$6^{+0.07}_{+0.02}$ depth 6	34	ø6.3	11 spot face depth 6.5	M6 penetrating	85	14	M6 penetrating	30
ø32	22	12	66	11	$6^{+0.07}_{+0.02}$ depth 6	Rc1/8	1	14	$6^{+0.07}_{+0.02}$ depth 6	44	ø6.3	11 spot face depth 6.5	M6 penetrating	101	16	M6 penetrating	36

Code / Bore size (mm)	P	Q	R	S	T	WW	X	AX	BX	CX	DX	EX	FX	Z	A1	A2	A3	A4	K0/K5/K2/K3 HD	K0/K5/K2/K3 RD
ø6	34	29	36	3	13	M4 depth 5	66	30	10	14	7	40	7	0.5	25	10	M3 depth 4	-	3.5	31
ø10	42	36	44	3	15	M5 depth 6	79	34	14	17	8	48	9	0.5	25	20	M3 depth 3.5	-	2.5	43
ø16	56	45	58	4	21	M5 depth 6	92	34	26	16	8	60	8	0	30	25	M4 depth 4	-	7	49.5
ø20	60	50	62	5	27	M6 depth 8	105	34	33	18	9	67	9	0	30	30	M4 depth 4	13	10.5	55
ø25	70	60	72	6	33	M8 depth 8	107	34	33	18	9	67	9	0	30	30	M5 depth 6	18	11.5	53.5
ø32	94	75	96	6	38	M8 depth 8	123	34	47	20	9	83	9	0	30	40	M5 depth 8	24	15.5	65.5

*3: STR2-B6 and 10 are not compatible with K0 and K5 reed switches.
*4: The cylinder may tilt due to uneven surface if it is installed with the spot face side (JJ) contacted. In this case, change the port position or use the option of piping port position on the 180° opposite side (O) to keep the spot face side from being the contacting surface.
*5: HD and RD dimensions for 10 mm stroke length differ from these dimensions according to the setting.

Dimensions with switches (2-color display switch)

2-color display swtich (K2Y$^{H}/_{V}$, K3Y$^{H}/_{V}$)

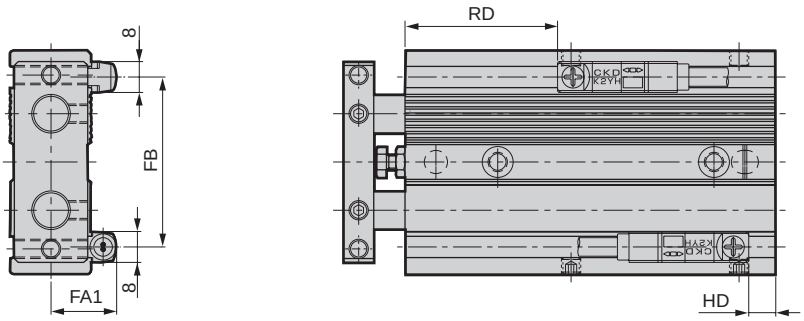

● 2-color display K□YH/V

Code / Bore size (mm)	FA1	FB	RD	HD
ø6	13.5	24	30	2.5
ø10	14.5	34	42	1
ø16	17	44	48.5	5.5
ø20	20	49	54	9.5
ø25	23	58	52.5	10.5
ø32	25.5	71	64.5	14.5

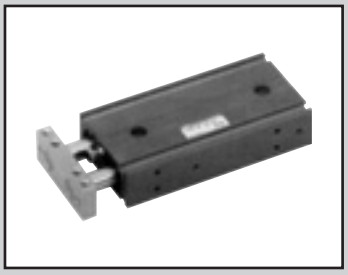

Twin rod cylinder Double acting/fine speed

STR2-BF Series (Made to order)

● Bore size: ø10/ø16/ø20/ø25/ø32

JIS symbol

RoHS CAD

Structure and material restriction

	Structure	Model No.
P7 Series	Exhaust treatment	P72
	Vacuum treatment	P73

Specifications

Descriptions	STR2-BF-P7*				
Bore size mm	ø10	ø16	ø20	ø25	ø32
Actuation	Double acting				
Working fluid	Compressed air				
Max. working pressure MPa	0.7				
Min. working pressure MPa	0.15**	0.1			
Ambient temperature °C	5 to 60				
Port size	M5				Rc1/8
Port size (relief port)	M5				Rc1/8
Stroke tolerance mm	0 to -5				
Working piston speed mm/s	1 to 200				
Non-rotating accuracy	±0.1°			±0.3°	
Piston rod bearing	Ball bearing				
Cushion	Rubber cushion				
Lubrication	Lubrication not possible				
Allowable energy absorption J	0.061	0.181	0.303	0.68	1.3

* The low speed (STR2-0) is recommended for ø6.

Stroke length

Model No.	Bore size (mm)	Standard stroke (mm)	Max. stroke (mm)	Available stroke (mm)	Min. stroke (mm)	Min. stroke with switch (mm)
STR2-BF	ø10	10, 20, 30, 40, 50	50	Up to 100	5	10
	ø16, ø20, ø25, ø32	10, 20, 30, 40, 50, 60, 70, 80, 90, 100	100	Up to 200		

*1: The custom stroke length is available by 1 mm increments. However, the total dimensions are the same as the longer standard stroke length.

Switch specifications

● 1-color/2-color display

Descriptions	Proximity 2-wire		Proximity 3-wire			Reed 2-wire			
	K2H/K2V	K2YH/K2YV	K3H/K3V	K3PH/K3PV (custom order)	K3YH/K3YV	K0H/K0V		K5H/K5V	
Applications	Programmable controller		Programmable controller, relay			Programmable controller, relay		Programmable controller, relay IC circuit (without indicator lamp), serial connection	
Output method	-		NPN output	PNP output	NPN output	-			
Power supply voltage	-		10 to 28 VDC			-			
Load voltage	10 to 30 VDC		30 VDC or less			12/24 VDC	110 VAC	5/12/24 VDC	110 VAC
Load current	5 to 20 mA (*2)		50 mA or less			5 to 50 mA	7 to 20 mA	50 mA or less	20 mA or less
Indicator lamp	LED (Lit when ON)	Red/green LED (Lit when ON)	LED (Lit when ON)	Yellow LED (Lit when ON)	Red/Green LED (Lit when ON)	LED (Lit when ON)		-	
Leakage current	1 mA or less		10 μA or less			0 mA			
Weight g	1 m: 18 3 m: 49 5 m: 80	1 m: 31 3 m: 85 5 m: 139	1 m: 18 3 m: 49 5 m: 80		1 m: 31 3 m: 85 5 m: 139	1 m: 18 3 m: 49 5 m: 80			

*1: Refer to page 309 for detailed switch specifications and Dimensions.
*2: Max. load current: 20mA at 25°C.The current is lower than 25 mA if the operating ambient temperature around the switch is higher than 20˚C. (60 to 5 mA at 10°C)

Theoretical thrust table

(Unit: N)

Bore size (mm)	Operating direction	Working pressure MPa							
		0.1	0.15	0.2	0.3	0.4	0.5	0.6	0.7
ø10	Push	-	23.6	31.4	47.1	62.8	78.5	94.2	1.10×10^2
	Pull	-	15.1	20.1	30.2	40.2	50.3	60.3	70.4
ø16	Push	40.2	60.3	80.4	1.21×10^2	1.61×10^2	2.01×10^2	2.41×10^2	2.81×10^2
	Pull	24.5	36.8	49.0	73.5	98.0	1.23×10^2	1.47×10^2	1.72×10^2
ø20	Push	62.8	94.2	1.26×10^2	1.88×10^2	2.51×10^2	3.14×10^2	3.77×10^2	4.40×10^2
	Pull	40.2	60.3	80.4	1.21×10^2	1.61×10^2	2.01×10^2	2.41×10^2	2.81×10^2
ø25	Push	98.2	1.47×10^2	1.96×10^2	2.95×10^2	3.93×10^2	4.91×10^2	5.89×10^2	6.87×10^2
	Pull	67.4	1.01×10^2	1.35×10^2	2.02×10^2	2.70×10^2	3.37×10^2	4.04×10^2	4.72×10^2
ø32	Push	1.61×10^2	2.41×10^2	3.22×10^2	4.83×10^2	6.43×10^2	8.04×10^2	9.65×10^2	1.13×10^3
	Pull	1.21×10^2	1.81×10^2	2.41×10^2	3.62×10^2	4.83×10^2	6.03×10^2	7.24×10^2	8.44×10^2

Dimensions

It is identical with the double acting clean room specifications. Refer to page 244.

SCPD3
SCM
SSD2
MDC2
SMG
LCM
LCR
LCG
LCX
STM
STG
STR2
MRL2
GRC
Cylinder switch
MN3E MN4E
4GA/B
M4GA/B
MN4GA/B
F.R (module unit)
Clean F.R
Precision R
Press gauge Diff. press gauge
Electro-pneumatic R
Speed controller
Auxiliary valve
Fitting/ tube
Clean air unit
Pressure sensor
Flow rate sensor
Valve for air blow
Ending

How to order

● Without switch (Magnet for switch incorporated)

STR2 - B F - 16 - 30 ——— O P72

● With switch (Magnet for switch incorporated)

STR2 - B F - 16 - 30 - K0H - R - O P72

Model No. Ⓐ Bearing Ⓑ Bore size Ⓒ Stroke length Ⓓ Switch model No. *1 Ⓔ Switch quantity Ⓕ Option *2 Ⓖ Clean room specifications

Code	Content
Ⓐ Bearing	
B	Ball bearing
Ⓑ Bore size (mm)	
10	ø10
16	ø16
20	ø20
25	ø25
32	ø32

Ⓒ Stroke (mm)

Bore size	Stroke	Available stroke	Custom stroke
ø10	5 to 50	Up to 100	By 1mm increments
ø16	5 to 100	Up to 100	
ø20	5 to 100	Up to 200	
ø25	5 to 100	Up to 200	
ø32	5 to 100	Up to 200	

■ The custom stroke length is available by 1 mm increments. However, the total length is the same as that of the next longer standard stroke length.

Ⓓ Switch model No.

Lead wire straight	Lead wire L-shaped	Contact	Voltage AC	Voltage DC	Display	Lead wire
K0H*	K0V*	Reed	●	●	1-color display	2 wires
K5H*	K5V*	Reed	●	●	No indicator lamp	2 wires
K2H*	K2V*	Proximity		●	1-color display	2 wires
K3H*	K3V*	Proximity		●	1-color display	3 wires
K3PH*	K3PV*	Proximity		●	1-color display (custom order)	3 wires
K2YH*	K2YV*	Proximity		●	2-color display	2 wires
K3YH*	K3YV*	Proximity		●	2-color display	3 wires

* Lead wire length	
Blank	1 m (standard)
3	3 m (option)
5	5 m (option)

Ⓔ Switch quantity	
R	1 (on rod end)
H	1 (on head end)
D	2

Ⓕ Option	
Blank	None
O	Piping port position on the 180° opposite side

Ⓖ Clean room specifications	
	Structure
P72	Exhaust treatment
P73	Vacuum treatment

⚠ Precautions for model No. selection

*1: STR2-BF-10 is not compatible with a reed switch.
*2: The piping port positions for "O" are as shown in the figure below.
*3: Refer to page 238 for combination of variations/options.

Piping port positions for standard (blank)

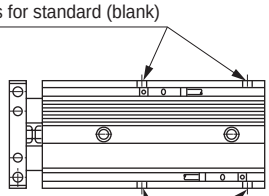

Piping port position on the 180° opposite side (code: O) piping port

[Example of model No.]

STR2-BF-16-30-K0H-R-OP72

Model: Twin rod cylinder, fine speed

Ⓐ Bearing : Ball bearing
Ⓑ Bore size : ø16 mm
Ⓒ Stroke length : 30 mm
Ⓓ Switch model No. : Reed K0H switch, lead wire 1 m
Ⓔ Switch quantity : 1 (on rod end)
Ⓕ Option : Piping port position on the 180° opposite side
Ⓖ Clean room specifications : Exhaust treatment

MEMO

As the selection conditions are different from those of general air cylinders, confirm whether the model is adequate or not according to selection guide.

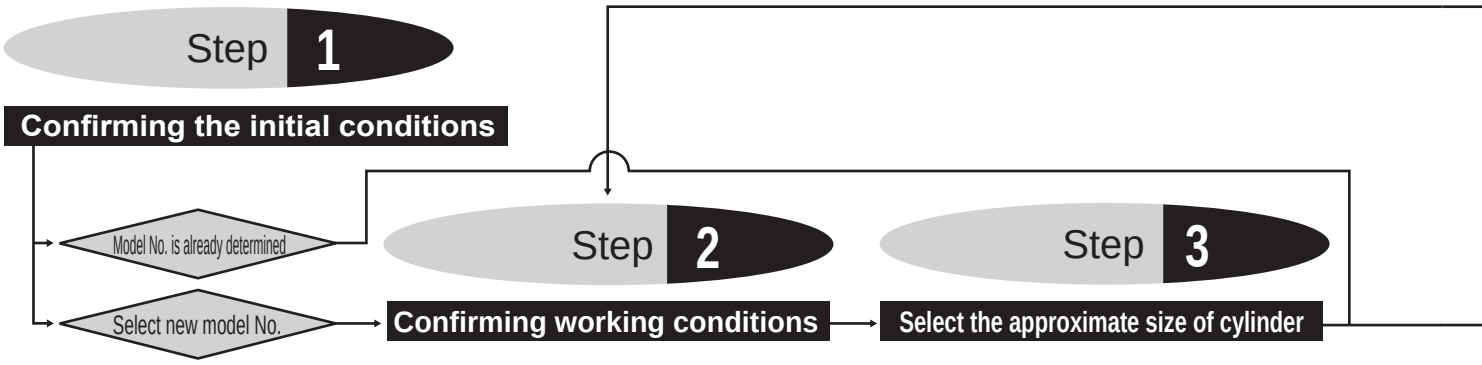

Step 2 Confirming working conditions

1. Working pressure P (MPa)
2. Total applied load W (N)
   [Total applied load]
   W = (Applied load) + (Jig load) + (Self weight of movable part: Fa). Table 1 shows the formula of the self weight of movable part.

Table 1. Formula of the self weight of movable part

Tube	Fa: Own gravity of movable part (N)
	STR2
ø6	0.16 + 0.002ST
ø10	0.38 + 0.004ST
ø16	1.08 + 0.013ST
ø20	1.66 + 0.013ST
ø25	2.82 + 0.025ST
ø32	4.33 + 0.025ST

3. Mounting orientation
   [Actuation]
   Horizontal, vertical-rise, vertical-decline
4. Stroke ST (mm)
5. Operation time t (s)
6. Operation speed V (mm/s)
   Formula of the cylinder's average operation speed Va
   Va = L /t (mm/s)

Step 3 Select the approximate size of cylinder

● Formula for calculating the size (bore size) of cylinder

$F = \pi/4 \times D^2 \times P$

$\therefore D = \sqrt{4F/\pi P}$

D: Cylinder bore size (mm)
P: Working pressure (MPa)
F: Cylinder theoretical thrust (N)

● When calculating from the theoretical thrust value in Table 2

Approximate required thrust ≥ Applied load × 2
("× 2" in "Applied load × 2" is for when the load factor is approx. 50% as a safety coefficient)

[Example] Working pressure 0.5 (MPa)
Applied load 25 (N)
Required thrust is 25 (N) × 2 = 50 (N)
The bore size selected from Table 2 with theoretical thrust of 50 N and over at working pressure of 0.5 MPa will be ø10 or more.
D = ø10

[Cylinder theoretical thrust]

Table 2 Cylinder theoretical thrust table

Theoretical thrust table Unit: N

Bore size (mm)	Operating direction	Working pressure MPa		
		0.1	0.15	0.2
ø6	Push	-	-	11.3
	Pull	-	-	6.28
ø10	Push	-	-	31.4
	Pull	-	-	20.1
ø16	Push	40.2	60.3	80.4
	Pull	24.5	36.8	49.0
ø20	Push	62.8	94.2	1.26×10^2
	Pull	40.2	60.3	80.4
ø25	Push	98.2	1.47×10^2	1.96×10^2
	Pull	67.4	1.01×10^2	1.35×10^2
ø32	Push	1.61×10^2	2.41×10^2	3.22×10^2
	Pull	1.21×10^2	1.81×10^2	2.41×10^2

*Refer to page 240 for theoretical thrust table.

SCPD3
SCM
SSD2
MDC2
SMG
LCM
LCR
LCG
LCX
STM
STG
STR2
MRL2
GRC
Cylinder Switch
MN3E MN4E
4GA/B
M4GA/B
MN4GA/B
F.R.(module unit)
Clean F.R
Precision R
Press gauge Diff. press gauge
Electro-pneumatic R
Speed controller
Auxiliary valve
Fitting/ tube
Clean air unit
Pressure sensor
Flow rate sensor
Valve for air blow
Ending

Step 4

Calculate the total applied load (W) and each moment

To the next page

Step 4 Calculate the total applied load (W) and each moment

● Calculate the static load (W_0) and moment (M) based on the load mounted on the cylinder

W_0 = (Applied load) + (Jig load) (N)

$M_1 = F_1 \times \ell_1$ (N·m)

$M_2 = F_2 \times \ell_2$ (N·m)

$M_3 = F_3 \times \ell_3$ (N·m)

For values of F_1, F_2 and F_3, use those shown in Fig. 2.

Fig. 2. Formula for calculating each moment
Calculate each moment from the applied load, inertia force coefficient G and eccentric distance.

[Bending moment]

$$M_1 = F_1 \times \ell_1 = 10 \times m_1 \times G \times \ell_1$$

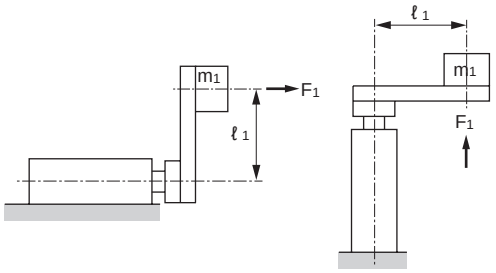

[Radial moment]

$$M_2 = F_2 \times \ell_2 = 10 \times m_2 \times G \times \ell_2$$

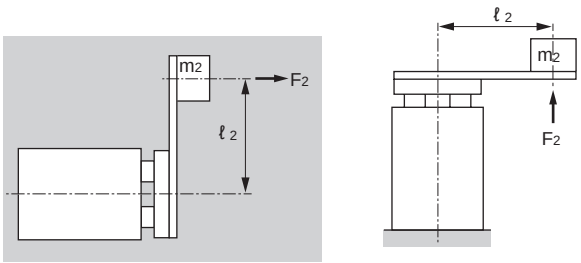

[Torsion moment]

$$M_3 = F_3 \times \ell_3 = 10 \times m_3 \times \ell_3$$

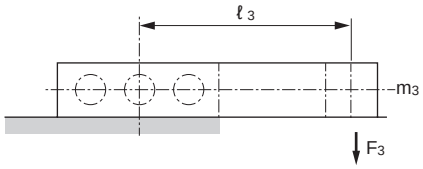

m_1, m_2, m_3: Load weight (kg)

ℓ_1, ℓ_2, ℓ_3: Eccentric distance (m)

G: Inertia force coefficient (Fig. 3)

Fig. 3. Trend of inertia force coefficient

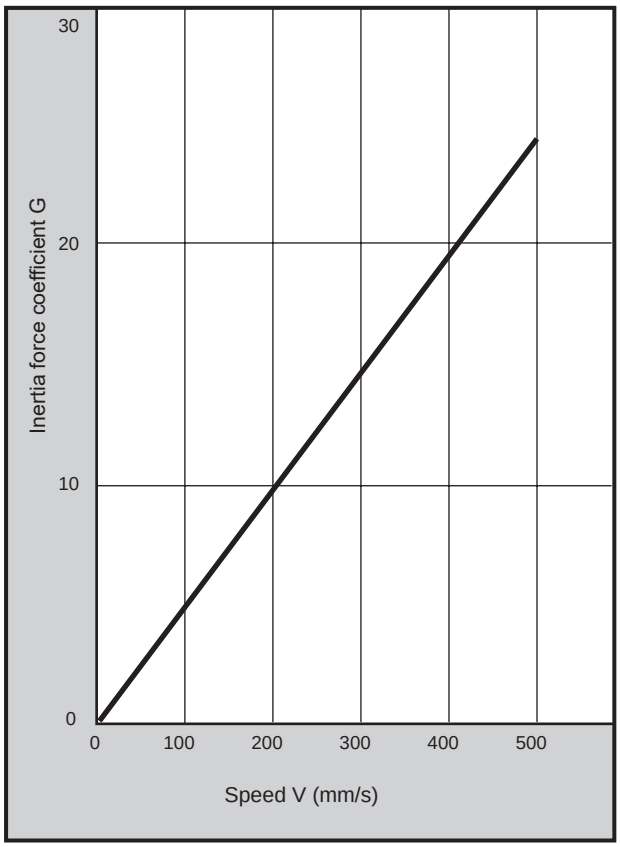

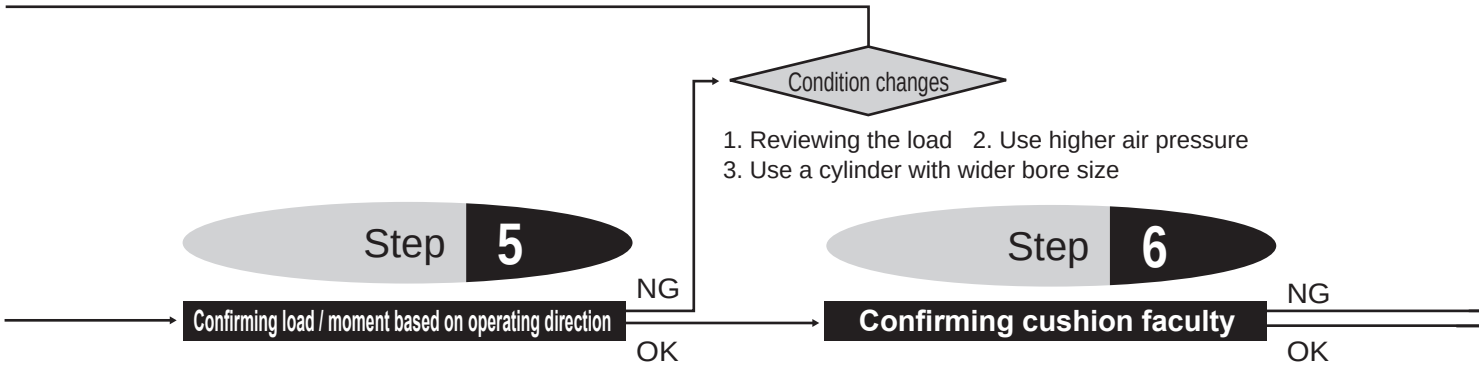

Step 5 Confirming the load and moment depending on the operating direction

5-1 Confirm applied load

❶ For horizontal operation

The value of applied static load must be the allowable load value or less.

Applied static load	W_0	Value obtained in Step 4
Allowable lateral load	Wmax	Select from Table 3 depending on the stroke length

(when using custom stroke length, select the longer standard stroke length)

$W_0 \leq Wmax$

Table 3 Allowable lateral load

● Ball bearing Unit: N

Type	Stroke length (mm)			
	10	20	30	40
STR2-B-6	2.6	1.9	1.5	1.2
STR2-B-10	6.0	4.4	3.6	3.0
STR2-B-16	11.4	8.5	7.0	5.9
STR2-B-20	12.7	9.6	7.9	6.8
STR2-B-25	14.7	11.1	9.2	7.9
STR2-B-32	24.3	18.5	15.4	13.3

* Refer to page 254 for allowable lateral load.
Also, refer to the graph on page 255 for eccentric load.

❷ For vertical operation

The total applied load value must be the value obtained by applying the load factor to the theoretical thrust

● Calculation of load factor

Total applied load	W	Value obtained in Step 2
Theoretical thrust of cylinder	F	Select from the theoretical thrust table on page 240 depending on the pressure

$\alpha = W/F \times 100$ (%)

● Determine the load factor by taking into account the status of utilization such as stability margin and service life of the cylinder. For general use, the value within the range in Table 4 is desirable.

Table 4 Appropriate range of load factor (reference value)

Working pressure (MPa)	Load factor (%)
0.1 to 0.3	$\alpha \leqq 40$
0.3 to 0.6	$\alpha \leqq 50$
0.6 to 1.0	$\alpha \leqq 60$

● A lateral load works when an eccentric load is applied.

The lateral load should be within the allowable lateral load in Table 3.

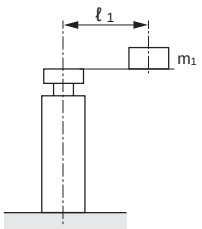

$$\frac{m_1 \times \ell_1 \times 10}{L} \leq Wmax$$

ST: Stroke (m)

Bore size	L	Bore size	L
ø6	0.022+ST	ø20	0.032+ST
ø10	0.027+ST	ø25	0.034+ST
ø16	0.026+ST	ø32	0.036+ST

5-2 Confirming the static moment

❶ Divide the value of bending moment and radial moment by the value in Table 5 to obtain the moment ratio and check that the total value of the moment ratio is 1.0 or less.

● Calculation of moment ratio

Bending moment M_1
Radial moment M_2
} Value obtained in Step 4

$M_1/M_1max + M_2/M_2max \leq 1.0$

Condition changes

1. Install an external shock absorber.
2. Decrease the operation speed
3. Use a cylinder with larger bore size

Selection complete

Table 5. Allowable value of moment (N·m)

Bore size	Allowable bending moment M1max, M2max
ø6	3.6
ø10	3.6
ø16	9.2
ø20	9.2
ø25	74
ø32	74

❷ The value of torsion moment must be the allowable torque value or less

Torsion moment M3 Value obtained in Step 4

Allowable torque

M_3max Select from Table 6 depending on the stroke length

(when using custom stroke length, select the longer standard stroke length)

$M_3 \leq M_3max$

Table 6. Allowable torque

● Ball bearing (N·m)

Type	Stroke length (mm)			
	10	20	30	40
STR2-B-6	0.009	0.006	0.005	0.004
STR2-B-10	0.030	0.022	0.018	0.015
STR2-B-16	0.071	0.053	0.043	0.036
STR2-B-20	0.088	0.067	0.055	0.047
STR2-B-25	0.125	0.094	0.078	0.067
STR2-B-32	0.267	0.203	0.169	0.146

* Refer to page 254 for allowable torque.

Step 6 CONFIRMING CUSHION FACULTY

Check if the kinetic energy generated by an actual load can be absorbed by the cylinder cushion.

● For the allowable absorbed energy of cylinder (E1), use the value in Table 7.

● Formula for calculating the kinetic energy of piston (E_2)

$$E_2 = 1/2 \times W \times V^2 \times \frac{1}{10} \text{ (J)}$$

W: Total applied load (N) Value obtained in Step 2

V: Speed of the piston entering the cushion (m/s)

$V = ST/t \times (1 + 1.5 \times \alpha/100)$

ST: Stroke (m)

t: Operation time (s)

α: Load factor (%)

Allowable absorbed energy of cylinder

● The kinetic energy absorption performance of the cylinder's cushion depends on the cylinder bore size. For the guided cylinder, use the values in Table 7 for comparison.

Table 7. Allowable absorbed energy value (E_1) of STR2

Bore size	Allowable energy absorption (J)	
	Rubber cushion	
	push	pull
ø6	0.008	0.059
ø10	0.061	0.083
ø16	0.181	0.083
ø20	0.303	0.127
ø25	0.68	0.237
ø32	1.3	0.311

$E_1 > E_2$

(Allowable absorbed energy) > (Kinetic energy of piston)

Selection complete

$E_1 < E_2$

(Allowable absorbed energy) < (Kinetic energy of piston)

Consider changing the following conditions:

1. Install an external shock absorber
2. Decrease the operation speed
3. Use a cylinder with larger bore size

Technical ❶ data: Allowable lateral load and torque

Allowable lateral load

Lateral load: F

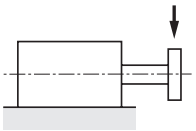

● Ball bearing

(N)

Type	Stroke length (mm)									
	10	20	30	40	50	60	70	80	90	100
STR2-B-6	2.6	1.9	1.5	1.2	1.0	-	-	-	-	-
STR2-B-10	6.0	4.4	3.6	3.0	2.6	-	-	-	-	-
STR2-B-16	11.4	8.5	7.0	5.9	5.1	4.5	4.0	3.7	3.3	3.0
STR2-B-20	12.7	9.6	7.9	6.8	5.9	5.3	4.7	4.3	3.9	3.6
STR2-B-25	14.7	11.1	9.2	7.9	6.9	6.1	5.5	5.0	4.6	4.2
STR2-B-32	24.3	18.5	15.4	13.3	11.7	10.5	9.5	8.7	8.0	7.4

Allowable torque

Torque: T (N·m)

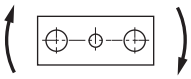

● Ball bearing

(N·m)

Type	Stroke length (mm)									
	10	20	30	40	50	60	70	80	90	100
STR2-B-6	0.009	0.006	0.005	0.004	0.003	-	-	-	-	-
STR2-B-10	0.030	0.022	0.018	0.015	0.013	-	-	-	-	-
STR2-B-16	0.071	0.053	0.043	0.036	0.031	0.028	0.025	0.023	0.020	0.018
STR2-B-20	0.088	0.067	0.055	0.047	0.041	0.037	0.032	0.030	0.027	0.025
STR2-B-25	0.125	0.094	0.078	0.067	0.058	0.051	0.046	0.042	0.039	0.035
STR2-B-32	0.267	0.203	0.169	0.146	0.128	0.115	0.104	0.095	0.088	0.081

Allowable lateral load

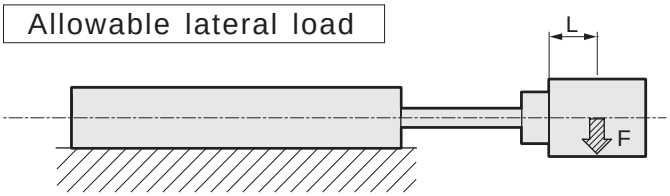

F: Lateral load (N)
L: Position of center of gravity of load (mm)

Basic Ball bearing

STR2-B-6/10-P7*

●In the case of L=5

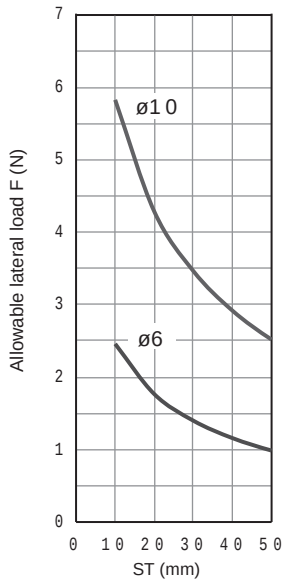

●In the case of L=15

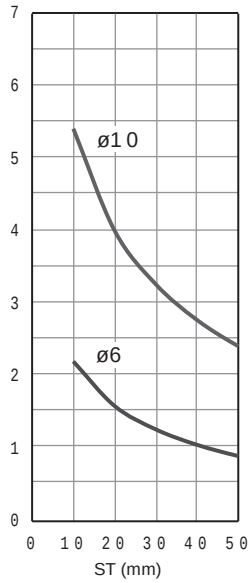

STR2-B-16/20/25/32-P7*

●In the case of L=15

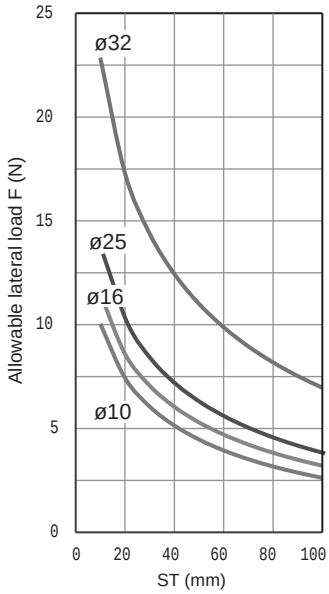

●In the case of L=30

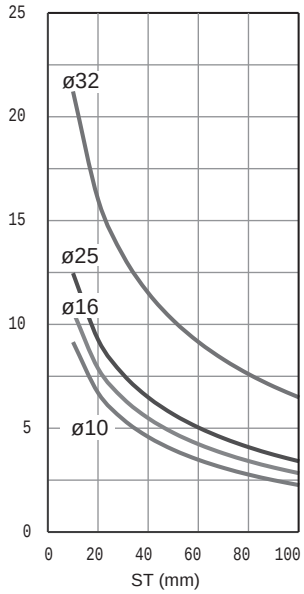

Allowable lateral load

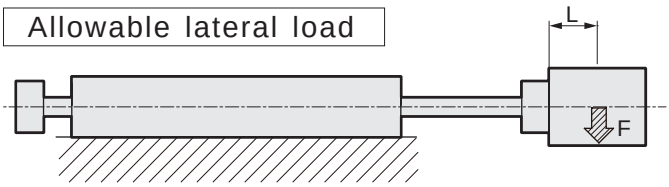

F: Lateral load (N)
L: Position of center of gravity of load (mm)

Double rod Ball bearing

STR2-B-6/10-P7*

●In the case of L=5

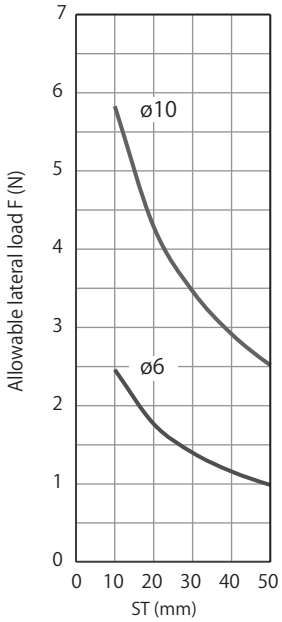

●In the case of L=15

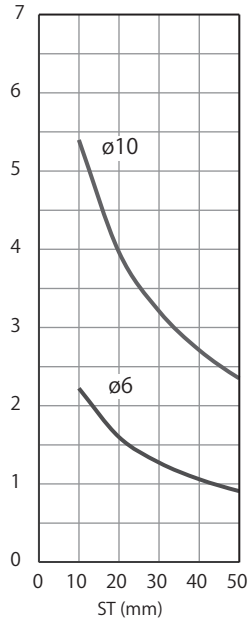

STR2-B-16/20/25/32-P7*

●In the case of L=15

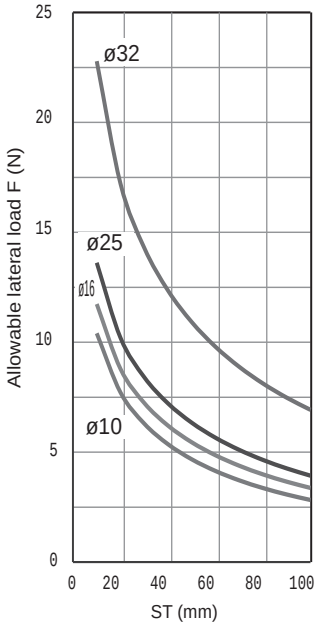

●In the case of L=30

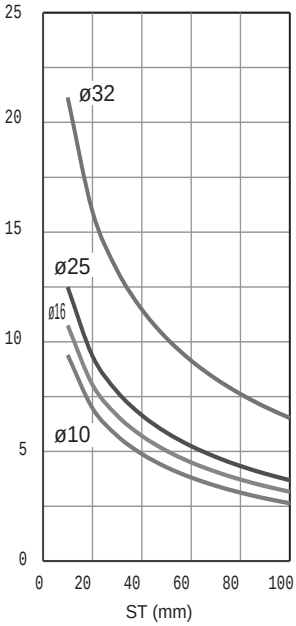

SCPD3
SCM
SSD2
MDC2
SMG
LCM
LCR
LCG
LCX
STM
STG
STR2
MRL2
GRC
Cylinder switch
MN3E MN4E
4GA/B
M4GA/B
MN4GA/B
F.R (module unit)
Clean F.R
Precision R
Press gauge Diff. press gauge
Electro-pneumatic R
Speed controller
Auxiliary valve
Fitting/ tube
Clean air unit
Pressure sensor
Flow rate sensor
Valve for air blow
Ending

Deflection

(Reference value)

For the inclination that is produced at the end of the end plate when no load is applied, the value in the graph below is used as a guide. (excluding the deflection of the piston rod)

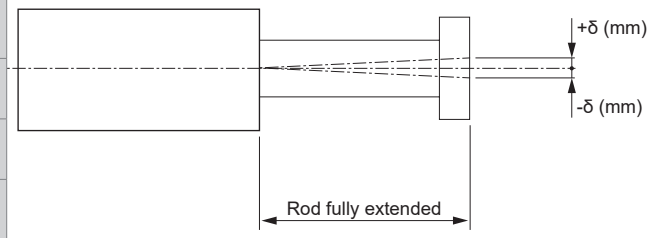

■ STR2-B

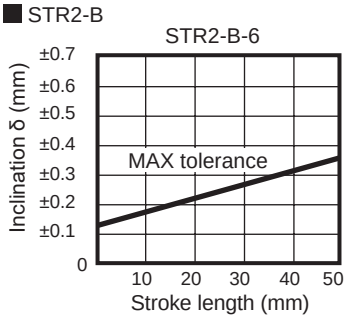

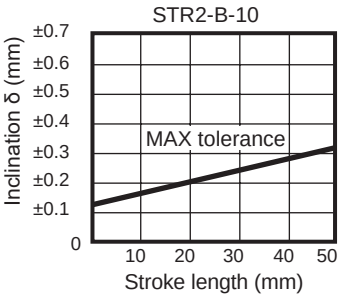

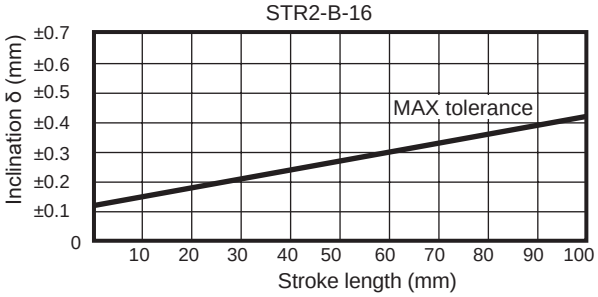

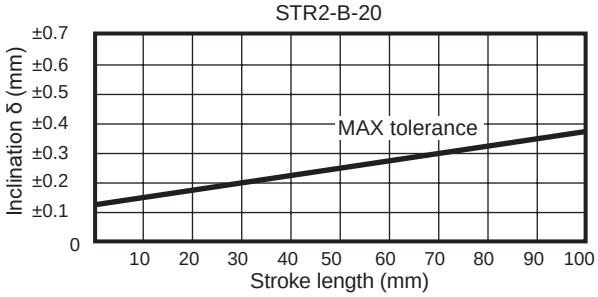

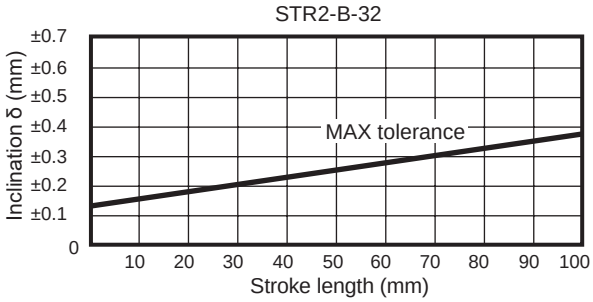

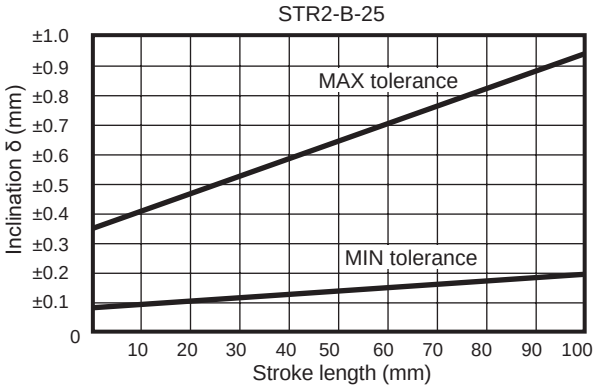

Pneumatic components

Safety Precautions

Always read this section before use.
Refer to page 2 for general information of the cylinder, and to page 320 for general information of the cylinder switch.

Twin rod cylinder STR2 Series

Design & selection

1. Fine speed STR2-F

CAUTION

■ Use the product with no lubrication.
Application of lubrication may cause changes in characteristics.

■ Assemble the speed controller near the cylinder.
When installed far from the cylinder, the speed becomes unstable.
Use SC-M3/M5, SC3W, SCD-M3/M5 and SC3WU Series for the speed controller.

■ In general, the speed is stabler at higher air pressure and lower load factor.
Use at a 50% or less load factor.

■ Do not apply a lateral load to the cylinder .
Also install the sliding guide so that it is not twisted.
With a large difference between static friction and kinematic friction of the guide, operation becomes unstable.

■ Avoid using this product where vibration is present.
The product will be adversely affected by vibration and operation will be unstable.

■ Stable speed control is achieved with a meter-out circuit.
When fine speed activation is performed with operating direction PUSH for the single rod cylinder, the popping out phenomenon occurs when operation starts if the load resistance is low. For the countermeasures, choose the circuit of ⓑ, ⓒ, or ⓓ.
Note that the circuit ⓓ is the most stable.

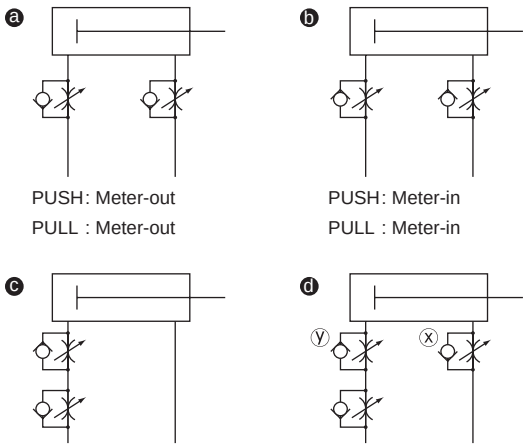

Speed adjustment method for PUSH operation of circuit ⓓ:
1. Set the speed with the speed controller x.
2. Restrict the speed with the speed controller y until there is no popping out.
3. Check the speed again.

(Note 1) When comparing ⓑ ⓒ ⓓ, the circuit ⓓ is most stable.

(Note 2) When installed vertically, the unit falls by its own weight in the meter-in circuit. Combine the cylinder with the meter-out circuit.

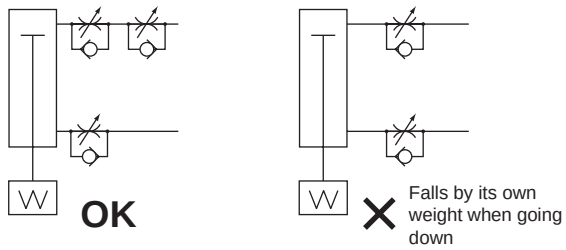

(Note 3) Use the circuit as shown in the figure below for the serial connection of the speed control valves.

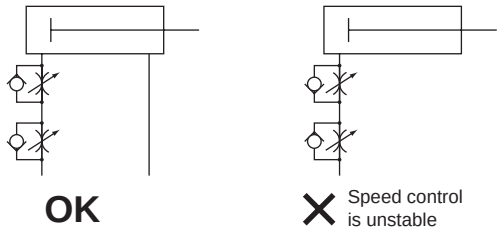

(Guidelines for pop-out generation)
When the following condition is met, popping out could occur.
• Thrust > Resistance
* Resistance: a force produced by a residual pressure on the outlet side (for fine speed, Inlet pressure = Residual pressure) + { For vertical use: friction caused by the load / For horizontal use: self-weight of the load

Installation & adjustment

1. Common

⚠ CAUTION

- The twin rod cylinder has two piping ports each on both sides in the operating direction. Change the plugged ports according to your application.
  After the change, confirm that there is no air leakage from the plugged ports.
- Do not damage surface flatness by denting or scratching the body (tube) mounting surface or the end plate surface.
  Make sure that the flatness of the mating surface where the end plate will be attached is 0.05 mm or below.
- When using a screw hole NN of the end plate, make sure that the bolt length is equivalent to the B dimension.
  Not doing so could cause malfunction or damage of the end plate.

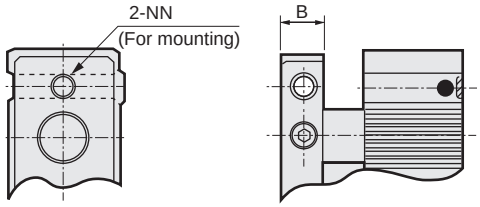

Bore size (mm)	B dimension
ø6	6
ø10	6
ø16	8
ø20	10
ø25	12
ø32	12

- Rubber cushion is integrated as a cushion mechanism. The table below shows kinetic energy can be absorbed by the rubber cushion. If the energy exceeds these values, consider using a separate shock absorber.

Bore size (mm)	Allowable energy absorption J	
	PUSH	PULL
ø6	0.008	0.059
ø10	0.061	0.083
ø16	0.181	0.083
ø20	0.303	0.127
ø25	0.68	0.237
ø32	1.3	0.311

- The cylinder may tilt due to uneven surface if it is installed with the spot face side (JJ) contacted. In this case, change the port position or use the option of piping port position on the 180° opposite side (o) to keep the spot face side from being the contacting surface.
- The cylinder body may be damaged or may malfunction if a unit with excessive inertia, etc., is actuated. Use within the allowable absorbed energy range.
- The twin rod cylinder has a bolt for 0 to -5 mm stroke length adjustment on the piston rod retraction side. Loosen the hexagon nut, adjust to the desired stroke length and tighten the hexagon nut to fix the length.
- Do not use the product with the stroke length adjusting bolt removed.

1. Common; with switch

⚠ CAUTION

- STR2-B-6 and 10 are not compatible with a reed switch.
  When using a proximity switch for STR2-B-6, avoid mounting the cylinder on a magnetic substance such as a metal plate. Failure to do so could lead to switch detection malfunction.
- The cylinder switch could malfunction if there is a magnetic substance such as a metal plate installed adjacently. Check that the distance of 20 mm is provided from the surface of the cylinders. (Same clearance for all bore sizes)

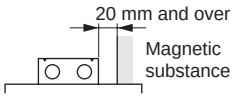

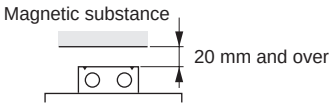

2. Fine speed STR2-F

⚠ CAUTION

- Perform adjustment such as centering so that a lateral load is not applied to the cylinder.
  Adjust and install the sliding guide so that it is not twisted.
  - When the load or the resistance fluctuates, operation becomes unstable.
  - If the differen ce be tw een static friction and kinetic friction of the guide is large, operation becomes unstable.

■ The cylinder switch could malfunction if cylinders are installed adjacently. Check that the following distances are provided between cylinders.

Adjacent conditions			Switch	ø6	ø10	ø16	ø20	ø25	ø32
Two cylinders in parallel	Horizontal mounting 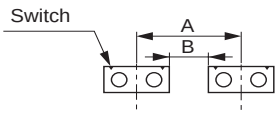	A	K2,K3	43	45	56	66	75	111
			K0,K5	-	-	62	81	85	111
		B	K2,K3	7	1	2	4	3	15
			K0,K5	-	-	8	19	12	15
	Vertical mounting Switches are attached on the side of the adjacent cylinders 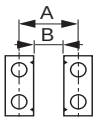	A	K2,K3	28	27	36	47	47	58
			K0,K5	-	-	36	53	53	58
		B	K2,K3	15	12	15	20	14	20
			K0,K5	-	-	15	26	20	20
	Vertical mounting Switches are attached on the opposite side to the adjacent cylinders 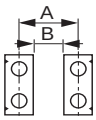	A	K2,K3	19	16	22	28	34	39
			K0,K5	-	-	22	33	34	39
		B	K2,K3	6	1	1	1	1	1
			K0,K5	-	-	1	6	1	1
More than two cylinders in parallel	Horizontal mounting 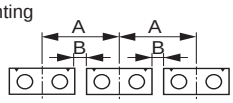	A	K2,K3	44	45	57	67	77	111
			K0,K5	-	-	64	83	86	111
		B	K2,K3	8	1	3	5	5	15
			K0,K5	-	-	10	21	14	15
	Vertical mounting 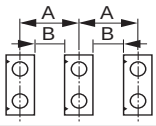	A	K2,K3	33	30	40	51	49	58
			K0,K5	-	-	42	60	97	58
		B	K2,K3	20	15	19	24	16	20
			K0,K5	-	-	21	33	25	20

*1: STR2-B-6 and 10 are not compatible with a reed switch.

MRL2

Magnetic rodless cylinder

Rodless

ø6/ø10/ø16/ø20/ø25/ø32

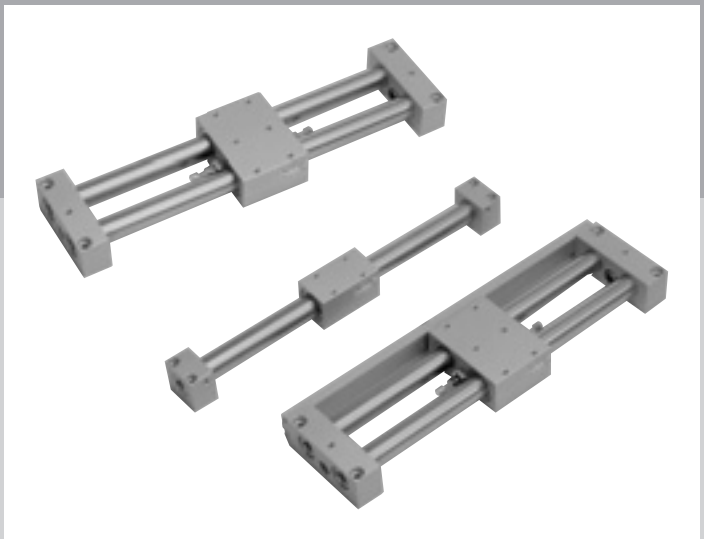

CONTENTS

Points regarding selection guide 262

Series variation

Variation and option selection table 264

● **Specifications 266**

● **How to order 268**

● **Dimensions 270**

Basic (combined guide) (MRL2)

Simplified guide (1-piston) (MRL2-G)

Simplified guide (2-piston) (MRL2-W)

Selection guide 275

Technical data 278

⚠ Safety precautions 279

MRL2/MRL2-G/MRL2-W Series

● Points regarding selection guide

	Points regarding selection guide	Recommended model No.	
Basic (Guide combined)	• When combining use of a guide system apart from the cylinder. • When there are space limitations.	**MRL2** ø6, ø10, ø16, ø20, ø25, ø32 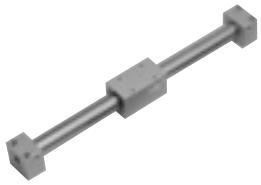	
Simplified guide	• When securing the course of the slider. • When using for general transportation. • When the stacked load is large. • When stroke length adjustment is required.	**MRL2-G** (simplified guide 1 piston) ø6, ø10, ø16, ø20, ø25, ø32 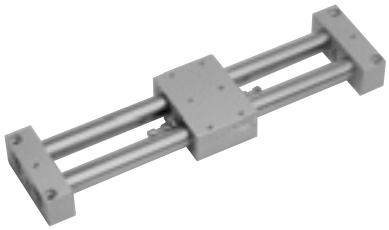	
	• When securing the course of the slider. • When using for general transportation. • When the stacked load is large and a double thrust is required. • When stroke length adjustment is required.	**MRL2-W** (simplified guide 2 piston) ø6, ø10, ø16, ø20, ø25, ø32 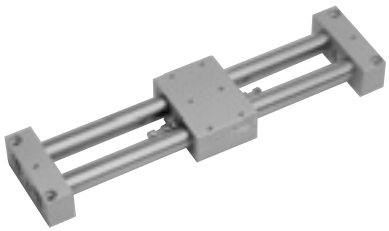	

	Page
⚠ Safety precautions	279
Technical data	
MRL2-G/MRL2-W slider runout amount Rubber-air cushion comparison data (reference values)	278

	Features
	• Lube keeping structure is used to realize a long service life. • By selecting the rubber-air cushion, it is possible to realize a reduction in impact noise levels and a reduction in impact acceleration at the end of the stroke length. • Cylinder direct mounting is possible.
	• With the twin tube of the MRL2 Series, it is no longer necessary to separately install a guide system. • Space saving with a thin design having a low slide table height. • Single surface piping is possible with the common piping with switch.
	• With the twin tube of the MRL2 Series, it is no longer necessary to separately install a guide system. • With the twin piston, the generated thrust is 2-fold that of a single piston model. • Space saving with a thin design having a low slide table height. • Single surface piping is possible with the common piping with switch.

SCPD3
SCM
SSD2
MDC2
SMG
LCM
LCR
LCG
LCX
STM
STG
STR2
MRL2
GRC
Cylinder switch
MN3E MN4E
4GA/B
M4GA/B
MN4GA/B
F.R (module unit)
Clean F.R
Precision R
Press gauge Diff. press gauge
Electro-pneumatic R
Speed controller
Auxiliary valve
Fitting/ tube
Clean air unit
Pressure sensor
Flow rate sensor
Valve for air blow
Ending

Variation and option selection table

◎ : Option variation (check category 2)
○ : C5 compatible (check category 3)
△ : Available depending on conditions (estimation)
: Not available

			Clean room specifications	
			Exhaust treatment	Exhaust treatment
		Code	P72	P52
Variation	Basic	Blank	◎	○
	With cylinder switch	L	◎	○
	Simplified guide 1-piston	G	◎	○
	Simplified guide 2-piston	W	◎	○
	Fine speed	F		
Port thread	NPT (ø25, ø32)	N	○	○
	G (ø25, ø32)	G	○	○
Cushion	Rubber-air cushioned	C	○	○
Option	With shock absorber	C		
	With scraper	S	*1	*1
	Centralized pipe laying equipped with switch	R	◎	○

*1: The scraper comes with P72 and P52 as standard, and the code "S" is not required.

MEMO

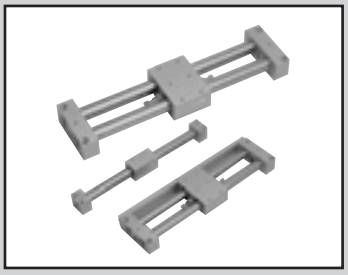

Magnet rodless cylinder

• Basic (combined guide) **MRL2** Series
• Simplified guide 1 piston **MRL2-G** Series
• Simplified guide 2 piston **MRL2-W** Series

● Bore size: ø6/ø10/ø16/ø20/ø25/ø32

JIS symbol

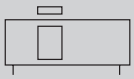

RoHS CAD

Structure and material restriction

	Structure	Material restriction			Model No.
P7 Series	Low particle generation				P72
P5 Series (custom order product)	Low particle generation	Copper-based materials prohibited	Silicon-based materials prohibited	Halogen-based materials prohibited (fluorine, chlorine, bromine)	P52

Specifications

Descriptions		MRL2-(L)-P72/P52, MRL2-G(L)-P72/P52, MRL2-W(L)-P72/P52					
Bore size	mm	ø6	ø10	ø16	ø20	ø25	ø32
Actuation		Double acting					
Working fluid		Compressed air					
Max. working pressure	MPa	0.7					
Min. working pressure	MPa	0.3		0.2			
Proof pressure	MPa	1.05					
Ambient temperature	°C	-10 to 60 (no freezing)					
Port size		M5				Rc1/8	
Stroke tolerance	mm	$^{+1.5}_{0}$ (to 1000)			$^{+2.0}_{0}$ (to 1500)		
Working piston speed	mm/s	50 to 500					
Cushion		Rubber cushion					
Lubrication		Not available					
Magnet holding force (*1)	N	19	63	166	294	350	574
Adjustable stroke range (single side) (*2)	mm	3	4	6	8.5	10	10

*1: The simplified guide 2 piston will be a 2-fold value.
*2: The stroke length of MRL2 (basic) cannot be adjusted.

Stroke length

Bore size (mm)	Standard stroke length (mm)	Max. stroke length (mm)	Max. stroke with switch (mm)	Max. stroke length (mm) of centralized pipe laying with switch	Min. stroke length (mm)
ø6	50, 100, 150, 200	300	200	-	1
ø10	50, 100, 150, 200, 250, 300	500	300	300	
ø16	100, 150, 200, 250, 300, 400, 500	1000	500	500	
ø20	200, 250, 300, 350, 400, 500, 600, 700	1500	700	700	
ø25	200, 250, 300, 350, 400, 500, 600, 700	1500	700	700	
ø32	200, 250, 300, 350, 400, 500, 600, 700	1500	700	700	

■ The custom stroke length is available by 1 mm increments.

Number of installed T switches and the min. stroke length (mm)

Switch quantity	1				2				3				4			
Switch model No. / Bore size (mm)	T*V	T*H	T*YV	T*YH	T*V	T*H	T*YV	T*YH	T*V	T*H	T*YV	T*YH	T*V	T*H	T*YV	T*YH
ø6 equiv.	5	5	5	5	20	50	40	70	40	85	71	115	60	120	101	160
ø10 equiv.	5	5	5	5	20	50	40	70	40	85	71	115	60	120	101	160
ø16 equiv.	5	5	5	5	20	50	40	70	40	85	71	115	60	120	101	160
ø20 equiv.	5	5	5	5	20	50	40	70	40	85	71	115	60	120	101	160
ø25 equiv.	5	5	5	5	20	50	40	70	40	85	71	115	60	120	101	160
ø32 equiv.	5	5	5	5	20	50	40	70	40	85	71	115	60	120	101	160

Switch specifications

• 1-color/2-color display

Descriptions	Proximity 2-wire				Proximity 3-wire			
	T1H/T1V	T2H/T2V	T2YH/T2YV	T2WH/T2WV	T3H/T3V	T3PH/T3PV	T3YH/T3YV	T3WH/T3WV
Applications	Programmable controller relay, small solenoid valve	Programmable controller			Programmable controller, relay			
Output method	-				NPN output	PNP output	NPN output	NPN output
Power supply voltage	-				10 to 28 VDC			
Load voltage	85 to 265 VAC	10 to 30 VDC		24 VDC ±10%	30 VDC or less			
Load current	5 to 100 mA	5 to 20 mA (*2)			100 mA or less		50 mA or less	
Indicator lamp	LED (Lit when ON)	LED (Lit when ON)	Red/green LED (Lit when ON)	Red/green LED (Lit when ON)	LED (Lit when ON)	Yellow LED (Lit when ON)	Red/green LED (Lit when ON)	Red/green LED (Lit when ON)
Leakage current	1 mA or less with 100 VAC 2 mA or less with 200 VAC	1 mA or less			10 μA or less			
Weight g	1 m: 33 3 m: 87 5 m: 142	1 m: 18 3 m: 49 5 m: 80	1 m: 33 3 m: 87 5 m: 142	1 m: 18 3 m: 49 5 m: 80	1 m: 18 3 m: 49 5 m: 80		1 m: 33 3 m: 87 5 m: 142	1 m: 18 3 m: 49 5 m: 80

*1: Refer to page 309 for detailed switch specifications and Dimensions.
*2: Max. load current: 20mA at 25°C.The current is lower than 25 mA if the operating ambient temperature around the switch is higher than 20˚C.
(60 to 5 mA at 10°C)

Cylinder weight

Unit (g)

Model No.	Without switch		With switch		common piping with switch.	
	Weight for 0 mm stroke length	Additional weight per S = 100 mm	Weight for 0 mm stroke length	Additional weight per S = 100 mm	Weight for 0 mm stroke length	Additional weight per S = 100 mm
MRL2-6	73	13	103	39	–	–
MRL2-10	143	28	169	48	–	–
MRL2-16	278	43	313	63	–	–
MRL2-20	542	85	587	105	–	–
MRL2-25	954	98	1017	128	–	–
MRL2-32	1230	195	1301	225	–	–
MRL2-G-6	193	28	223	54	–	–
MRL2-G-10	368	53	394	73	411	41
MRL2-G-16	635	85	670	105	691	41
MRL2-G-20	1197	155	1242	175	1269	41
MRL2-G-25	1852	196	1915	226	1997	93
MRL2-G-32	2297	390	2368	420	2455	93
MRL2-W-6	203	28	233	54	–	–
MRL2-W-10	398	53	424	73	441	41
MRL2-W-16	710	85	745	105	766	41
MRL2-W-20	1367	155	1412	175	1439	41
MRL2-W-25	2206	196	2269	226	2351	93
MRL2-W-32	2859	390	2930	420	3017	93

*1: The weight of the switch is not included in the product weight of the model equipped with a switch and the common piping with switch.

Theoretical thrust table

● MRL2, MRL2-G

(Unit: N)

Bore size (mm)	Operating direction	Working pressure MPa					
		0.2	0.3	0.4	0.5	0.6	0.7
ø6	Push/Pull	-	8.48	11.3	14.1	17.0	19.8
ø10	Push/Pull	-	23.6	31.4	39.3	47.1	55.0
ø16	Push/Pull	40.2	60.3	80.4	1.01×10^2	1.21×10^2	1.41×10^2
ø20	Push/Pull	62.8	94.2	1.26×10^2	1.57×10^2	1.88×10^2	2.20×10^2
ø25	Push/Pull	98.2	1.47×10^2	1.96×10^2	2.45×10^2	2.95×10^2	3.44×10^2
ø32	Push/Pull	1.61×10^2	2.41×10^2	3.22×10^2	4.02×10^2	4.83×10^2	5.63×10^2

● MRL2-W

(Unit: N)

Bore size (mm)	Operating direction	Working pressure MPa					
		0.2	0.3	0.4	0.5	0.6	0.7
ø6	Push/Pull	-	17.0	22.6	28.3	33.9	39.6
ø10	Push/Pull	-	47.1	62.8	78.5	94.2	1.10×10^2
ø16	Push/Pull	80.4	1.21×10^2	1.61×10^2	2.01×10^2	2.41×10^2	2.81×10^2
ø20	Push/Pull	1.26×10^2	1.88×10^2	2.51×10^2	3.14×10^2	3.77×10^2	4.40×10^2
ø25	Push/Pull	1.96×10^2	2.95×10^2	3.93×10^2	4.91×10^2	5.89×10^2	6.87×10^2
ø32	Push/Pull	3.22×10^2	4.83×10^2	6.43×10^2	8.04×10^2	9.65×10^2	1.13×10^3

How to order

Without switch (No magnet for switch)

MRL2-W - 10 C - 50 ——— P72

With switch (Magnet for switch incorporated)

MRL2-WL - 10 C - 50 - T2H - R - R P72

Ⓐ Model No.

Ⓑ Bore size

Ⓒ Cushion *1

Ⓓ Stroke length *2

Ⓔ Switch model No. The symbol "*" indicates the lead wire length. *3

Ⓕ Switch quantity

Ⓖ Option Note 5

Ⓗ Clean room specifications *4

Code		Content
Ⓐ Model No.		
Basic	MRL2	Without switch
	MRL2-L	With switch
Simplified guide 1 piston	MRL2-G	Without switch
	MRL2-GL	With switch
Simplified guide 2 piston	MRL2-W	Without switch
	MRL2-WL	With switch

Ⓑ Bore size (mm)

6	ø6
10	ø10
16	ø16
20	ø20
25	ø25
32	ø32

Ⓒ Cushion

Blank	Rubber cushion
C	Rubber-air cushion

Ⓓ Stroke length (mm)

Bore size	Stroke length	Custom stroke length
ø6	**1 to 300**	**By 1 mm increments**
ø10	**1 to 500**	
ø16	**1 to 1000**	
ø20 to ø32	**1 to 1500**	

Ⓔ Switch model No.

Lead wire straight	Lead wire L-shaped	Contact	Voltage AC	Voltage DC	Display	Lead wire
T1H*	**T1V***	Proximity	●		1-color display	2 wires
T2H*	**T2V***			●		
T3H*	**T3V***			●		3 wires
T2WH*	**T2WV***			●	2-color display	2 wires
T2YH*	**T2YV***			●		
T3WH*	**T3WV***			●		3 wires
T3YH*	**T3YV***			●		
T3PH*	**T3PV***			●	1-color display (custom order)	

*** Lead wire length**

Blank	1m (standard)
3	3 m (option)
5	5 m (option)

Ⓕ Switch quantity

R	1 on R side
L	1 on L side
D	2
T	3
4	4 (indicate switch quantity for more than 4 switches.)

Ⓖ Option

R	Centralized pipe laying type with switch (The basic and ø6 cannot be selected.)

Ⓗ Clean room specifications

	Structure	Material restriction
P72	Low dust specifications	-
P52	Low dust specifications	Copper-based/silicon-based/halogen-based materials (fluorine, chlorine, bromine) are prohibited

⚠ Precautions for model No. selection

*1: In the case of MRL2-G, W with the "C" rubber-air cushion, the stopper is protruding form the end plate by approximately 1 mm when being shipped. Further note that care must be taken as moving the stopper and adjusting the stroke length may cause the rubber-air cushion to become ineffective.

*2: Refer to the following table for max. stroke length with switch.

*3: Switches other than Ⓔ switch model No. are available. Custom order: Refer to Ending 309 for details.

*4: "P52" is a custom order product.

***5: When selecting a centralized pipe laying type with an "R" switch, select the model No. with a switch (MRL2-*L).**

Bore size (mm)	Max. stroke length with switch (mm)
ø6	200
ø10	300
ø16	500
ø20	700
ø25	700
ø32	700

[Example of model No.]

MRL2-WL-10-50-T2H-R-RP72

Model: Rodless cylinder

Ⓐ Model No. : Simplified guide 2 piston
Ⓑ Bore size : ø10 mm
Ⓒ Cushion : Rubber cushioned
Ⓓ Stroke length : 50 mm
Ⓔ Switch model No. : Proximity T2H switch
Ⓕ Switch quantity : 1 on R-side
Ⓖ Option : Common piping with switch.
Ⓗ Clean room specifications : Low dust specifications

MEMO

SCPD3
SCM
SSD2
MDC2
SMG
LCM
LCR
LCG
LCX
STM
STG
STR2
MRL2
GRC
Cylinder switch
MN3E MN4E
4GA/B
M4GA/B
MN4GA/B
F.R (module unit)
Clean F.R
Precision R
Press gauge Diff. press gauge
Electro-pneumatic R
Speed controller
Auxiliary valve
Fitting/ tube
Clean air unit
Pressure sensor
Flow rate sensor
Valve for air blow
Ending

Dimensions: MRL2 (basic)

• MRL2 (basic) without switch

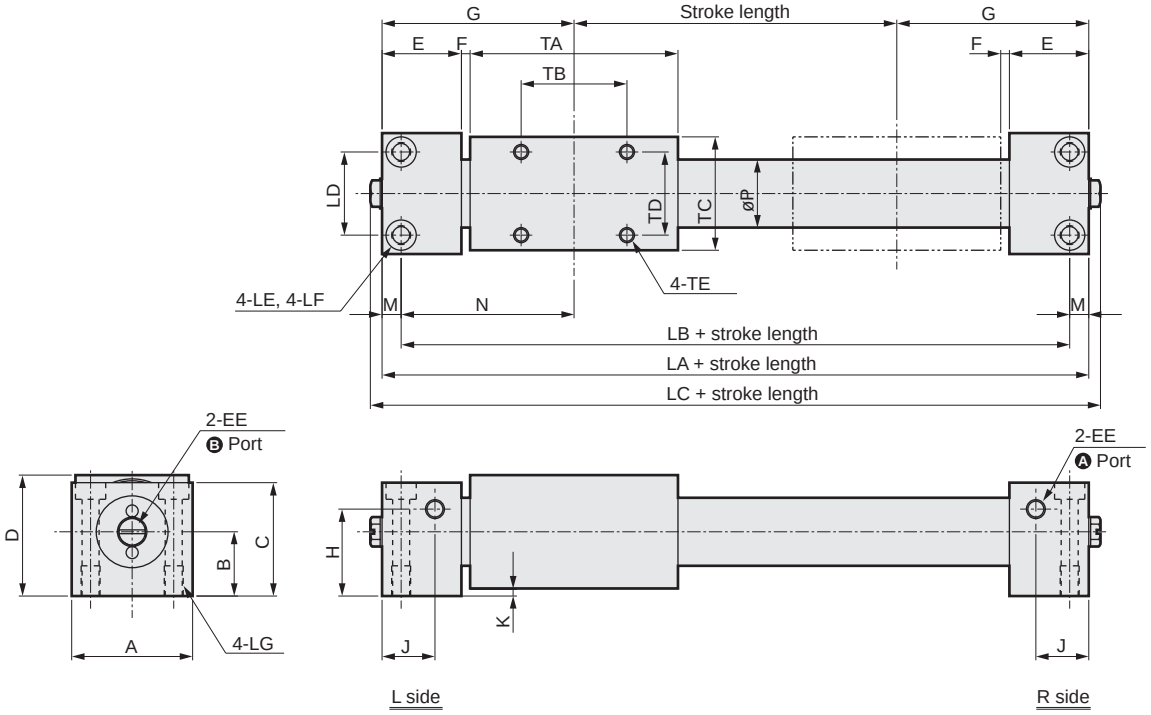

Note: It is possible to select Ⓐ, Ⓑ for the air piping port.
The unit will be shipped with the plug assembled onto port Ⓑ.
• ø6 to ø20: Plug (FPL-M5)
• ø25, ø32: Hexagon socket head tapered screw plug

Code	Dimensions					Installation dimensions							
Bore size (mm)	LA	LC	A	C	D	LB	LD	LE	LF	LG	TB	TD	TE
ø6	74	80.2	20	16.5	20	68	14	ø3.5	-	M4 depth 6	20	12	M3 depth 4.5
ø10	80	86.2	26	24	26	72	18	ø3.5	ø6.5 spot face depth 3.3	M4 depth 8	20	18	M3 depth 4.5
ø16	102	108.2	32	30	32	92	22	ø4.5	ø8 spot face depth 4.4	M5 depth 8	28	22	M4 depth 6
ø20	128	134.2	38	36	38	116	26	ø5.5	ø9.5 spot face depth 5.4	M6 depth 12	44	26	M4 depth 6
ø25	130	132.2	52	45	48	118	40	ø5.5	ø9.5 spot face depth 5.4	M6 depth 12	40	30	M6 depth 6
ø32	138	140.2	60	53	56	124	46	ø6.9	ø11 spot face depth 6.5	M8 depth 12	40	40	M6 depth 9

Code	General dimensions												
Bore size (mm)	B	E	EE	F	G	H	J	K	M	N	P	TA	TC
ø6	11	15	M5 depth 4	2	37	9	9.5	2	3	34	7.6	40	18
ø10	14	18	M5 depth 4	2	40	5.5	10	2	4	36	12	40	24
ø16	17	21	M5 depth 4	2.5	51	23	14	2	5	46	18	55	30
ø20	20	24	M5 depth 4	3	64	28	15.5	2	6	58	23	74	36
ø25	25.5	27	Rc1/8	3	65	29	17	3	6	59	28	70	45
ø32	29.5	27	Rc1/8	3	69	37	17	3	7	62	35	78	53

Dimensions: MRL2 (basic)

● MRL2-L (basic) with switch

● For ø6 ● For ø10 ● For ø16 to ø32

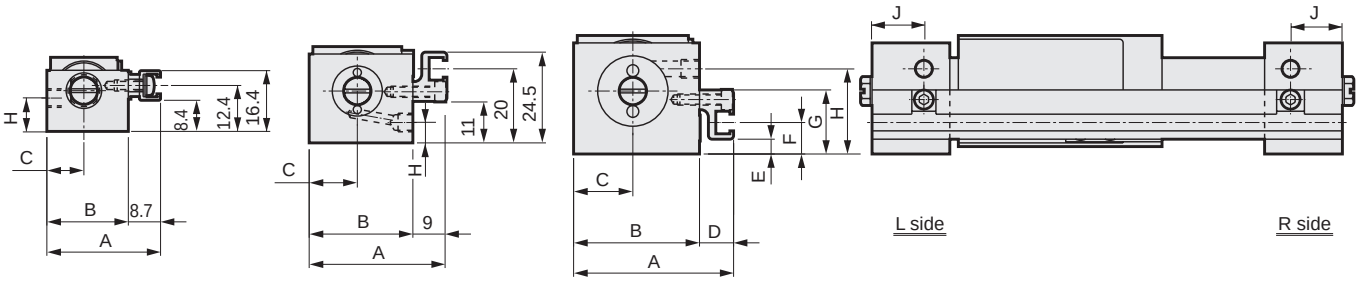

Code / Bore size (mm)	A	B	C	D	E	F	G	H	J
ø6	30.7	22	10	–	–	–	–	9	9.5
ø10	37	28	13	–	–	–	–	5.5	10
ø16	43	34	16	9.0	4	8.5	17.3	23	14
ø20	49	40	19	9.0	9	13.5	22.3	28	15.5
ø25	60.7	52	26	8.7	2	7.5	21	29	17
ø32	68.7	60	30	8.7	10	15.5	29	37	17

Dimensions: MRL2-G (simplified guide 1 piston)/MRL2-W (simplified guide 2 piston)

- MRL2-G (simplified guide 1 piston) without switch
- MRL2-W (simplified guide 2 piston) without switch

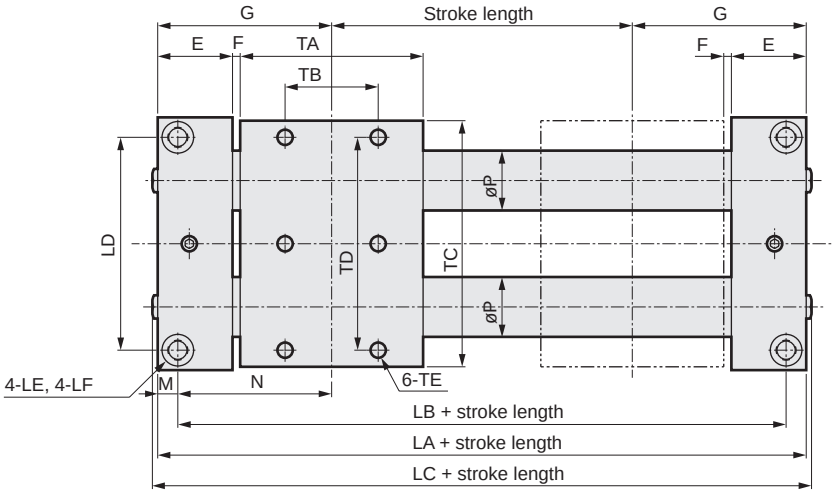

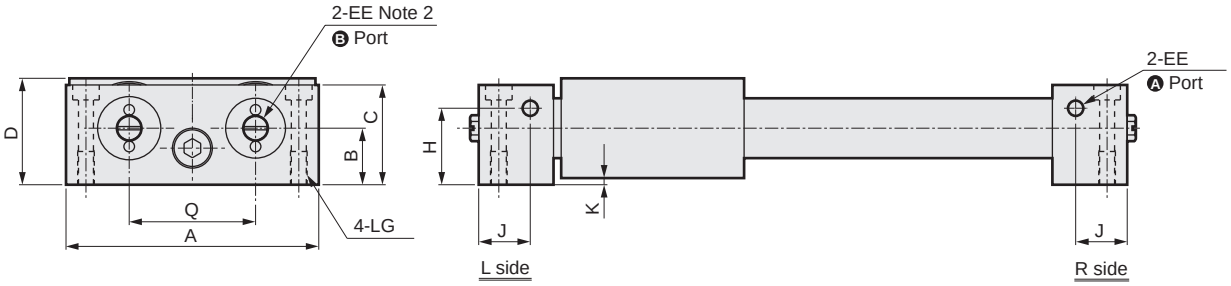

Note 1: It is possible to select Ⓐ, Ⓑ for the air piping port.
The unit will be shipped with the plug assembled onto port Ⓑ.
- ø6 to ø20: Plug (FPL-M5)
- ø25, ø32: Hexagon socket head tapered screw plug

Note 2: MRL2-W will be "4-EE".

Code	Dimensions					Installation dimensions							
Bore size (mm)	LA	LC	A	C	D	LB	LD	LE	LF	LG	TB	TD	TE
ø6	74	80.2	46	20	24	68	40	ø3.5	-	M4 depth 6	20	38	M3 depth 4.5
ø10	83	87.2	64	24	26	74	54	ø4.5	ø8 spot face depth 4.4	M5 depth 10	20	55	M4 depth 6
ø16	105	109.2	76	30	32	93	64	ø5.5	ø9.5 spot face depth 5.4	M6 depth 12	28	64	M5 depth 8
ø20	131	135.2	90	36	38	119	77	ø6.9	ø11 spot face depth 6.5	M8 depth 12	44	78	M5 depth 8
ø25	136	138	108	45	48	122	90	ø6.9	ø11 spot face depth 6.5	M8 depth 12	40	90	M6 depth 9
ø32	144	146	126	53	56	130	108	ø6.9	ø11 spot face depth 6.5	M8 depth 12	40	104	M6 depth 9

Code	General dimensions													
Bore size (mm)	B	E	EE	F	G	H	J	K	M	N	P	Q	TA	TC
ø6	13	15	M5 depth 4	2	37	9	9.5	2	3	34	7.6	26	40	44
ø10	14	19.5	M5 depth 4	2	41.5	5.5	11.5	2	4.5	37	12	34	40	62
ø16	17	22.5	M5 depth 4	2.5	52.5	23	15.5	2	6	46.5	18	38	55	74
ø20	20	25.5	M5 depth 4	3	65.5	28	17	2	6	59.5	23	46	74	88
ø25	25.5	30	Rc1/8	3	68	29	20	3	7	61	28	50	70	101
ø32	29.5	30	Rc1/8	3	72	37	20	3	7	65	35	60	78	119

Dimensions: MRL2-G (simplified guide 1 piston)/MRL2-W (simplified guide 2 piston)

- MRL2-GL (simplified guide 1 piston) with switch
- MRL2-WL (simplified guide 2 piston) with switch

CAD

- For ø6

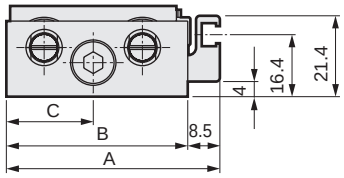

- For ø10

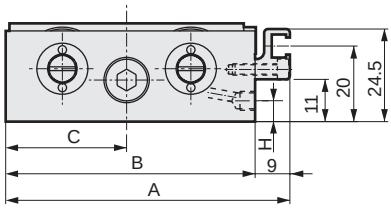

- For ø16 to ø32

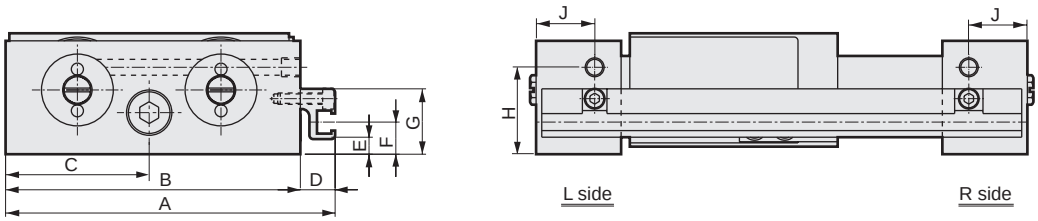

Code / Bore size (mm)	A	B	C	D	E	F	G	H	J
ø6	56.5	48	23	–	–	–	–	9	9.5
ø10	75	66	32	–	–	–	–	5.5	11.5
ø16	87	78	38	9	4	8.5	17.3	23	15.5
ø20	101	92	45	9	9	13.5	22.3	28	17
ø25	116.7	108	54	8.7	2	7.5	21	29	20
ø32	134.7	126	63	8.7	10	15.5	29	37	20

- MRL2-GL-*-R (simplified guide 1 piston) common piping with switch.
- MRL2-WL-*-R (simplified guide 2 piston) common piping with switch.

- For ø10

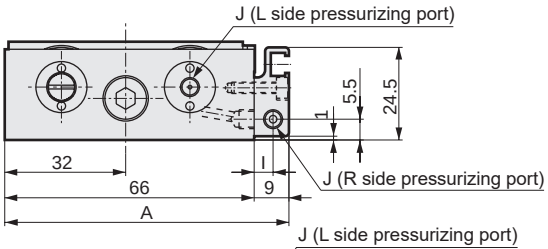

- For ø16 to ø32

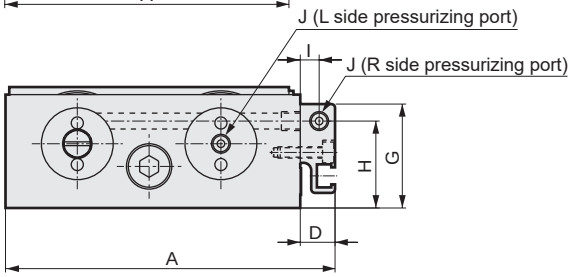

Code / Bore size (mm)	A	D	G	H	I	J
ø10	75	–	–	–	5	M5 depth 4
ø16	87	9	27.5	23	5	M5 depth 4
ø20	101	9	32.5	28	5	M5 depth 4
ø25	122	14	45	29	7.5	Rc1/8
ø32	140	14	53	37	7.5	Rc1/8

Switch mounting position dimensions

● MRL2-L-* (switch: T2H/v, T3H/v, T2WH/v, T3WH/v)
GL
WL

● For ø6 ● For ø10 ● For ø16 to ø32

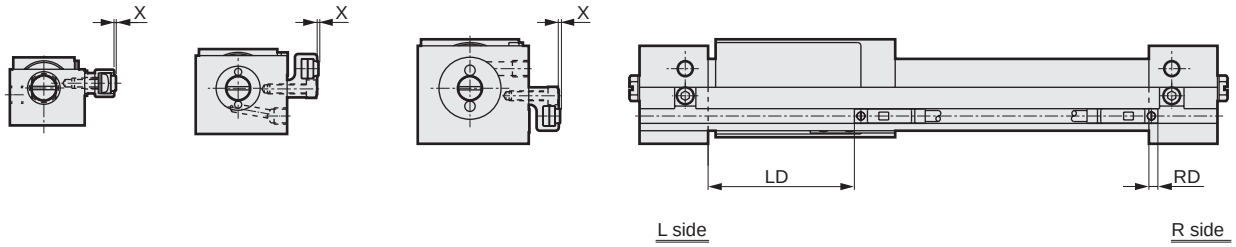

Code	T2 H/v, T3 H/v			T2W H/v, T3W H/v		
Bore size (mm)	LD	RD	X	LD	RD	X
ø6	27	3.5	0.5	29	1.5	0.5
ø10	27	2.5	0.5	29	0.5	0.5
ø16	44	2.5	0.5	46	0.5	0.5
ø20	63.5	1	0.5	65.5	-1	0.5
ø25	58	2	0.5	60	0	0.5
ø32	67.5	1.5	0.5	69	-0.5	0.5

● MRL2-L-* (switch: T1H/v, T2YH/v, T3YH/v)
GL
WL

● For ø6 ● For ø10 ● For ø16 to ø32

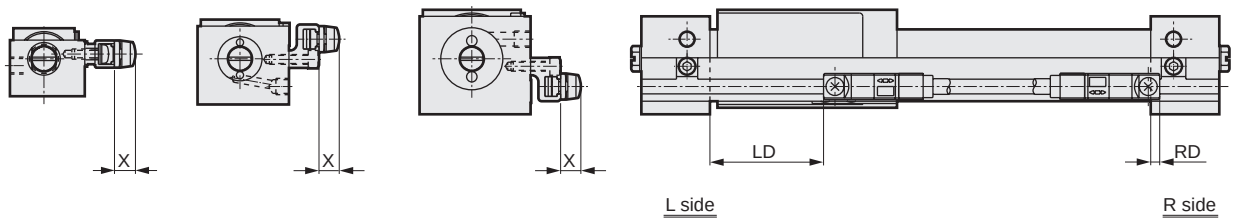

Code / Bore size (mm)	LD	RD	X
ø6	26	4.5	6 (11.5)
ø10	26	3.5	6 (11.5)
ø16	43	3.5	6 (11.5)
ø20	62.5	2	6 (11.5)
ø25	57	3	6 (11.5)
ø32	66	2.5	6 (11.5)

Note 1: The values within the brackets are for T1H/v.

MRL2 Series selection guide

STEP-1 Determination of allowable load

(1) Calculate all load (W) and moment (M1, M2, and M3) per load.
(2) Divide each load by the max. value shown in the table below to find load/moment ratio, and confirm that the total is 1.0 or less.

$$\frac{W}{Wmax} + \frac{M1}{M1max} + \frac{M2}{M2max} + \frac{M3}{M3max} \leq 1.0$$

Max.allowable load weight

Descriptions / Bore size (mm)	MRL2		MRL2-G/MRL2-W			
	Vertical load W (N)	Bending moment M1 (N·m)	Vertical load W (N)	Bending moment M1 (N·m)	Radial moment M2 (N·m)	Torsion moment M3 (N·m)
ø6	10	0.1	20	0.2	0.1	0.2
ø10	15	0.3	30	0.6	0.2	0.6
ø16	35	1.2	70	2.4	0.5	2.4
ø20	60	2.5	120	5.0	1.0	5.0
ø25	73	3.3	146	6.6	3.7	6.6
ø32	89	4.5	178	9.0	5.3	9.0

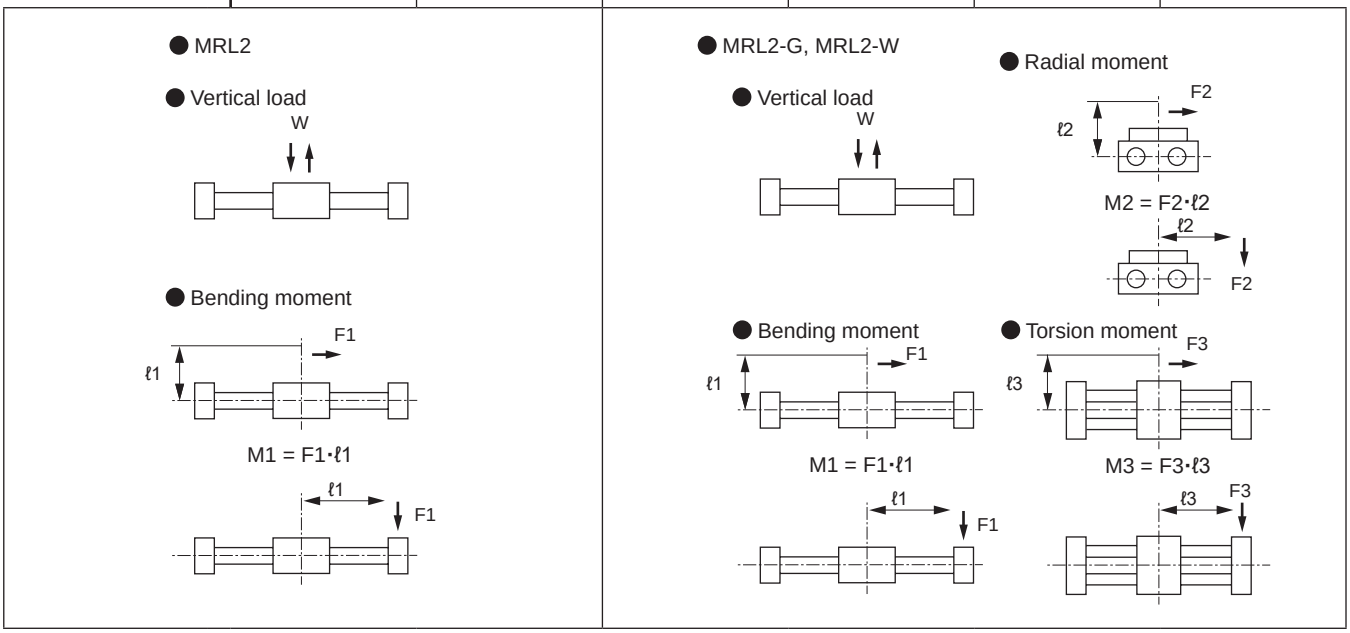

Note: Give sufficient consideration to inertia when the load moves or stops.

The value of the allowable vertical load W will vary depending on the stroke length.
Make a selection so that the value falls within the graph of Fig. 1.

Fig. 1. Relationship between stroke length and allowable vertical load

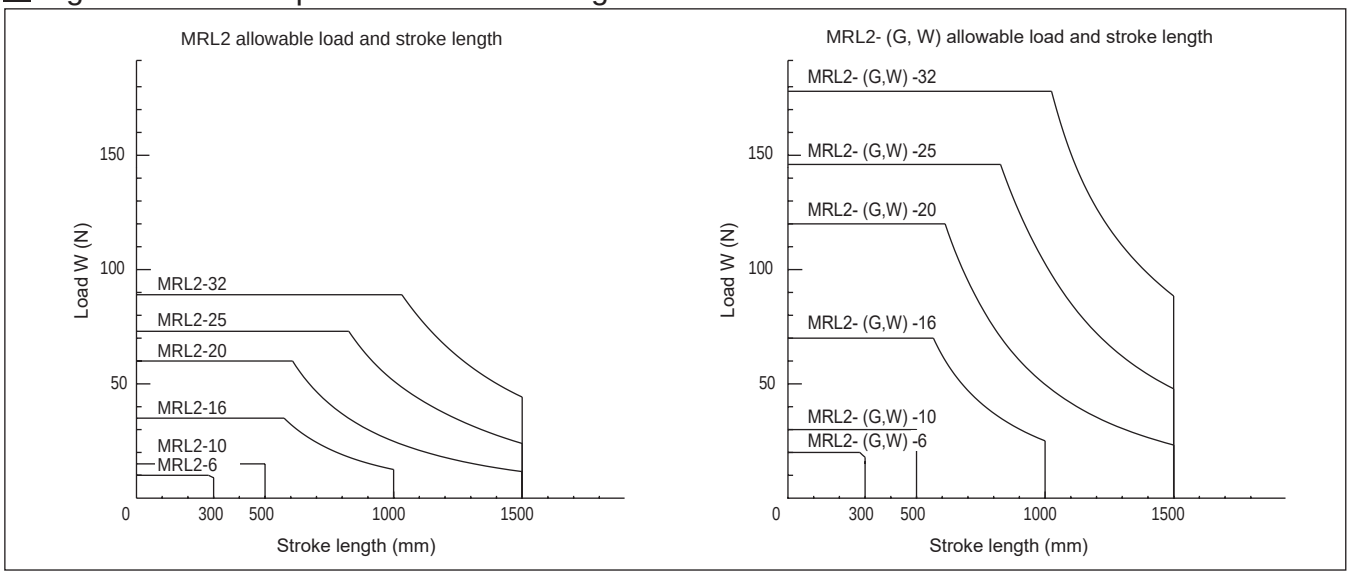

STEP-2 Calculation of load factor

1. Depending on the size and direction of the load as well as the mounting orientation, calculate the required thrust while using the 2, 3 in the table below as a guide.

Table 2

	Vertical load	Bending moment	Radial moment	Torsion moment
Size and direction of load	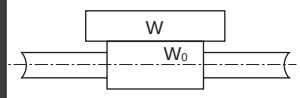	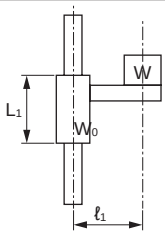	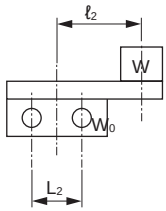	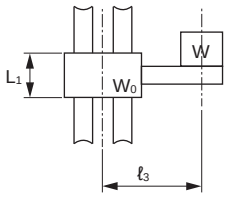
Mounting orientation	Horizontal	Vertical	Horizontal	Vertical
Required thrust	$F_N = 0.2\,(W + W_0)$	$F_N = \frac{0.2\,W\ell_1}{L_1} + W + W_0$	$F_N = 0.2\left(\frac{W\ell_2}{L_2} + W + W_0\right)$	$F_N = \frac{0.2\,W\ell_3}{L_1} + W + W_0$

As the slider will rotate with the single it will not be possible to apply a radial moment or a torsion moment.

F_N : Required thrust (N)
W : Load (N)
W_0 : Slider self-weight (N)
ℓ_n (n = 1, 2, 3) : Overhang (mm)
L_1 : Slider bearing pitch (mm)
L_2 : Pitch of guide (mm)

Table 3

Model No.	W_0	L_1	L_2
MRL2-6	0.4	27	–
10	0.6	27	–
16	1.2	39	–
20	2.4	58	–
25	3.8	70	–
32	5.2	78	–
MRL2-$^{G}_{W}$-6	0.9	27	26
10	1.7	27	34
16	3.0	39	38
20	5.9	58	46
25	8.5	70	50
32	11.9	78	60

Calculate the load factor from the required thrust calculated in 2.1 and ■Table 4, Fig. 2. (Make sure that the load factor is less than or equal to approximately 50%.)

$$\text{Load factor } \alpha = \frac{F_N}{\frac{a}{100}\cdot A} \times 100$$

$$B = \frac{a}{100}\cdot A$$

F_N: Required thrust (N) a: Thrust efficiency (%)
A : Theoretical thrust (N) B: Effective thrust (N)

Table 4 Theoretical thrust table

N

Model No.	Code					
	Working pressure MPa					
	0.2	0.3	0.4	0.5	0.6	0.7
MRL2, MRL2-G-6	–	8	11	14	17	20
10	–	24	31	39	47	54
16	40	60	80	101	121	139
20	63	94	126	157	188	217
25	98	147	196	245	295	344
32	161	241	322	402	483	563
MRL2-W-6	11	17	23	28	34	39
10	31	47	63	79	94	108
16	80	121	161	201	241	277
20	126	188	251	314	377	434
25	196	294	392	490	590	688
32	322	482	644	804	966	1126

* Please be careful as the difference between the effectiveness thrust and theoretical thrust will be greater with a lower pressure due to the thrust efficiency being lower.

Fig. 2 Thrust efficiency

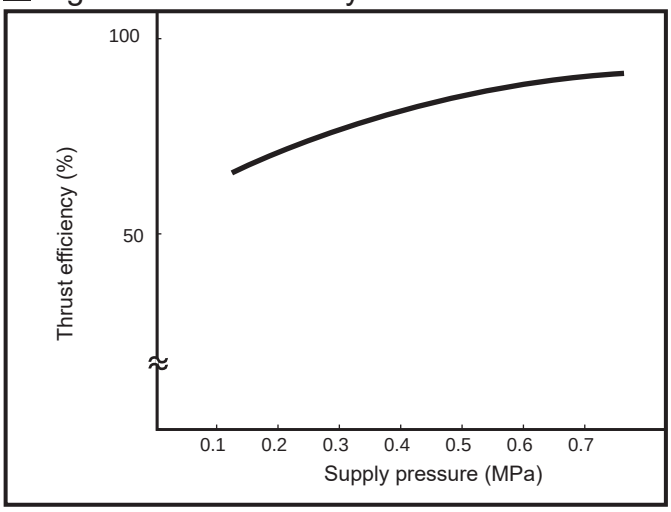

STEP-3 Formula for kinetic energy calculation

Calculate the kinetic energy from the load weight (m) and speed (V) and make sure that this is less than or equal to the allowed value listed in ■ Table 5. When exceeding the allowable absorbed energy value, increase the cylinder size so that the value falls under the allowable absorbed energy or consider the use of an external shock absorber. This speed is the velocity just before cushion entry and not the average speed, if it is unknown, calculate the cushion entry velocity by using formula (1).

$$E = \frac{1}{2} mV^2$$

$$Va = \frac{L}{t}$$

$$V = Va \times \left(1 + 1.5\frac{\alpha}{100}\right) \text{——} (1)$$

E : Kinetic energy (J)
m : Weight (kg)
V : Cushion entry speed (m/s)
Va : Average speed (m/s)
L : Stroke length (m)
t : Moving time (s)
α : Load factor (%)

■ Table 5 Allowable absorbed energy value

Bore size	Allowable energy absorption (J)	
	MRL2	MRL2-G/W
ø6	0.006	0.12
ø10	0.028	0.12
ø16	0.100	0.25
ø20	0.265	0.58
ø25	0.283	0.74
ø32	0.523	0.74

STEP-4 Confirmation of inertia load

Confirm that the weight (m), overhang (l_n (n = 1, 3)), and cushion entry speed (V) multiplied together and then divided by the value of A shown in the table below is less than or equal to 1.
When this value exceeds 1, increase the cylinder size so that this value becomes 1 or less or review the usage conditions.

Bore size	A	
	MRL2	MRL2-G/W
ø6	5.6	11.2
ø10	17	34
ø16	68	136
ø20	142	284
ø25	187	374
ø32	255	510

m : Weight (kg)
l_n (n = 1, 3) : Overhang (mm)
V : Cushion entry speed (m/s)

● MRL2

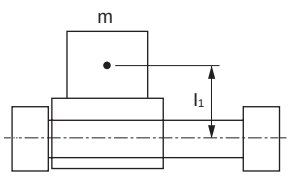

$$\frac{m \cdot l_1 \cdot V}{A} \leqq 1$$

● MRL2-G, MRL2-W

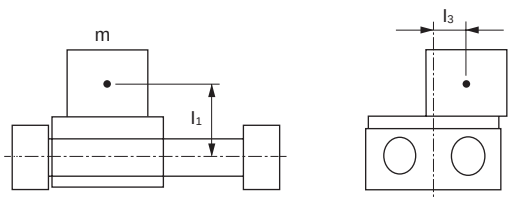

$$\frac{m \cdot (l_1 + l_3) \cdot V}{A} \leqq 1$$

MRL2-G/MRL2-W slider runout amount

● Bending moment

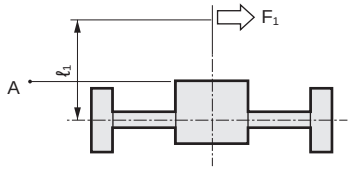

$M_1 = F_1 \cdot \ell_1$

● Radial moment

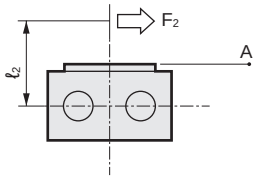

$M_2 = F_2 \cdot \ell_2$

● Torsion moment

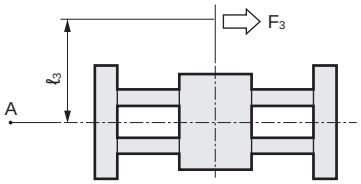

$M_3 = F_3 \cdot \ell_3$

Port size	Moment load		Table runout amount at point A (± mm)		
	MRL2	MRL2-G, W	M1 direction	M2 direction	M3 direction
ø6	M1, M3: 0.2 N·m	M2: 0.1 N·m	1.5	1.46	1.05
ø10	M1, M3: 0.6 N·m	M2: 0.2 N·m	1.61	1.12	0.92
ø16	M1, M3: 2.5 N·m	M2: 0.5 N·m	1.3	1.16	0.87
ø20	M1, M2, M3: 2.5 N·m		0.89	0.96	0.65
ø25	M1, M2, M3: 5 N·m		1.1	0.92	0.7
ø32	M1, M2, M3: 5 N·m		1.0	0.77	0.6

Note 1: Point A is a point that is 200 mm away from the center of the slider.

Rubber cushion and rubber-air cushion comparison data (reference values)

Measurement of the noise level (dB) generated when the piston collides at the end of the stroke length.

Measuring conditions

1. Sample cylinder : MRL2 basic stroke length 200 mm
2. Piston speed upon collision at end of stroke length : V = 300 mm/S
3. Distance between noise level meter and cylinder : 0.25 m
4. Load : No load

Representative example Unit: dB

Bore size	Rubber cushion	Rubber-air cushion
ø6	51.2	44.7
ø10	51.2	45.6
ø16	63.4	48.2
ø20	75.9	59.3

Pneumatic components

Safety Precautions

Be sure to read this section before use. Refer to page 2 for general information of the cylinder, and to page 320 for general information of the cylinder switch.

Magnet rodless cylinder MRL2 Series

Design & selection

1. Common

CAUTION

■ Be careful of the gap between the end plate and the slider.
Please be careful when operating the cylinder as getting a hand or finger caught in the unit may lead to injury.

■ Do not apply a load to the cylinder which is greater than or equal to the allowable load listed in the selection guide.

■ Do not use the product with the slider fixed.
Use the cylinder with the end plate fixed. Avoid use of the product with the slider fixed.

■ When fixing the basic (guide combined) with switch with the guide, configure the rotational angle of the slider to be less than or equal to ±1°.

■ Mount so that the slider functions with the min. operating pressure value of all processes.
When the flatness of the surface for cylinder installation is poor, the min. operating pressure will rise due to guide unit torsion and cause early wear of the bearing section. For this reason, install the unit so that the slider functions with the min. operating pressure value of all processes. Although mounting mating surfaces should be highly flat, adjust with shims when this cannot be confirmed.

■ Be careful to avoid scratching or denting the outer peripheral surface of the cylinder tube.
This will cause damage to the lube keeping structure, scraper, and slider wear ring and may lead to defective operation.

■ With the basic MRL2, be careful of the rotation of the slider.
Either connect with an external bearing or consider the use of MRL2-G or MRL2-W.

■ Do not use the product in a state where the slider is displaced.
If the slider becomes displaced due to an external force greater than the magnetic holding force, use your hand to push the stroke end back to its original position.

■ Do not apply an eccentric load to the slider.
When the load and cylinder are direct mounted, their respective shaft center eccentricities cannot be absorbed, and lateral load applies, leading to misoperation (figure below left). Use with consideration for a connection method which enables absorption of this eccentricity and the self-weight deflection of the cylinder. The figure below right shows recommended mounting.

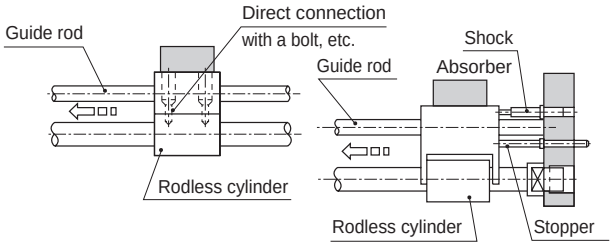

■ The cylinder switch may malfunction if there is a magnetic substance such as a metal plate installed adjacently. Check that a distance of 4 mm is provided from the switch surface.

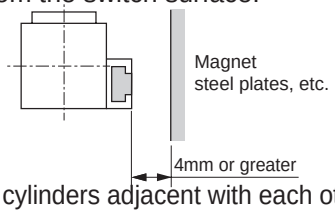

■ When using cylinders adjacent with each other or when using other magnetic sensors nearby, in order to prevent malfunctioning due to the leaked magnetic field of the cylinder embedded magnet, keep the minimum distance from the surface of the slider to the other magnetic sensors as shown in the listed below.

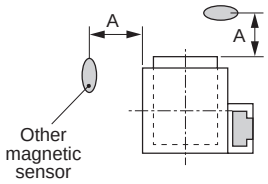

Port size	A (mm)
ø6	10
ø10	20
ø16	20
ø20	37
ø25	50
ø32	80

When this distance is dimension A or less, malfunctions can be prevented by placing a magnetic substance (steel plate with thickness of 2 mm or more) between the slider and the others.

2. With rubber-air cushion MRL2-*C

■ Note that because of its structure the stroke end position cannot be retained if the supply of air is stopped. When detecting the stroke end by switch, set the switch position with pneumatic pressure applied, as otherwise the position may be out of the detection range.

Use & maintenance

1. Common

WARNING

■ The magnetic force of the embedded magnet is strong. Do not disassemble the product.

■ With bore size of ø16 or less, because of changes in the cushion rigidity when left for long periods, the stroke length may become slightly shorter than the standard value with the low pressure setting. Perform a trial run, such as operating several times and performing back-and-forth operation at high supply pressure.

MEMO

GRC

Table type rotary actuator

Oscillation/rotational drive

Size 5/10/20/30/50/80

Overview

The table rotary actuator with rack and pinion realizes high load direct mounting and high position accuracy due to bearing guide.

CONTENTS

Product introduction 282

Series variation
Variation and option selection table 284

● **Basic (GRC) 286**
● **High accuracy (GRC-K) 286**
● **Fine speed (GRC-F) 294**
● **High accuracy/fine speed (GRC-KF) 294**

Selection guide 296
Technical data 299
⚠ Safety precautions 306

High load/high accuracy positioning

The table rotary actuator GRC series realizes high load, direct mounting and high position accuracy thanks to a bearing guide.

1 Flexible design

The industry's first compact type

GRC-5
Torque 5 (0.5 N·m)

Unprecedented miniature sizes
5/10/20/30/50/80 sizes available.

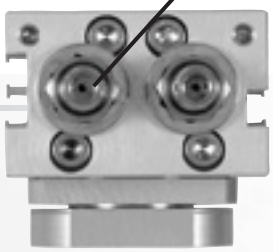

Comes with an angle adjustment bolt with rubber cushion for adjusting the oscillation angle.

Standard and high accuracy are available with the same dimension

Model changes for lines (standard or high accuracy) can be conducted quickly.

Basic **GRC**	High accuracy **GRC-K**
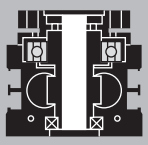	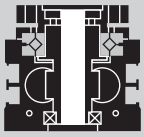
Reliable operation with radial bearing	Cross roller bearing used for high accuracy / high load

90° and 180° specifications are available separately.

A more compact form can be achieved by selecting a 90° oscillation angle.

GRC SERIES variations

	Basic GRC	High accuracy GRC-K
With switch	●	●
Size (torque value at 0.5 MPa)		
5 (0.5 N·m)	●	-
10 (1.0 N·m)	●	●
20 (2.0 N·m)	●	●
30 (3.0 N·m)	●	●
50 (5.2 N·m)	●	●
80 (8.1 N·m)	●	●
Oscillating angle		
90°	●	●
180°	●	●

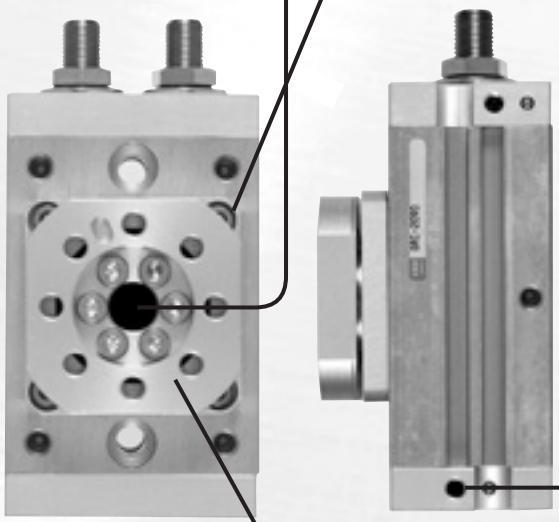

Rotary table enabling direct mount of load

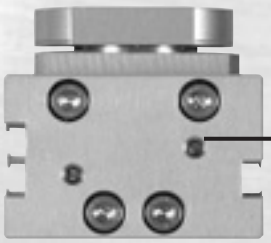

Rack and pinion

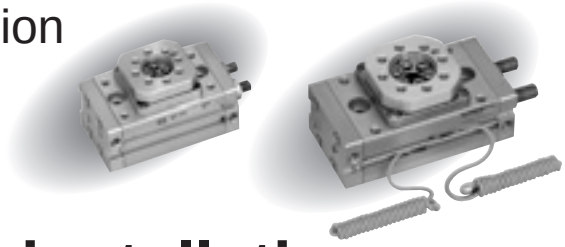

2 Easy installation

- Piping port direction can be selected from 3 sides.
- Large hollow diameter keeps piping and wiring simple.

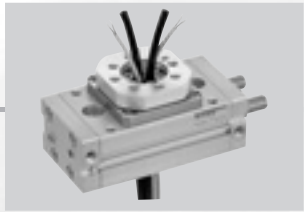

Hollow diameter ø 4 to ø 17 is available.

- Positioning spigots for the table top (4 positions) and the body bottom (1 position) are available.

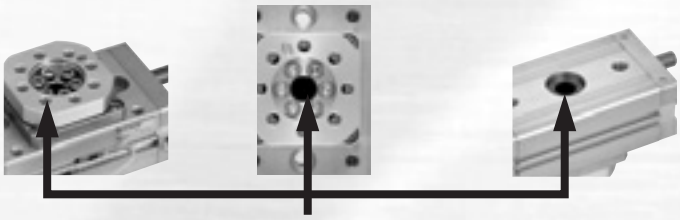

Socket and spigot for positioning

3 Easy operation

- Low speed operation of **1.5** seconds/90°

Low speed operation realized due to large pinion diameter and long piston stroke length.

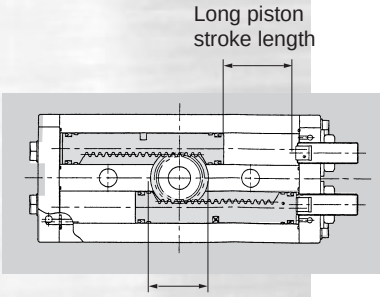

Applications

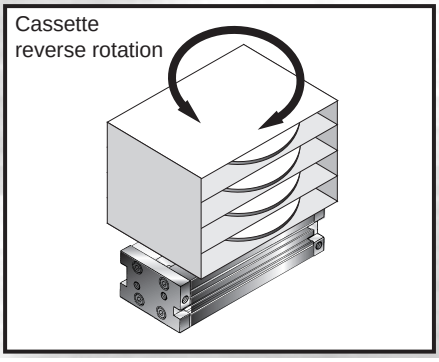

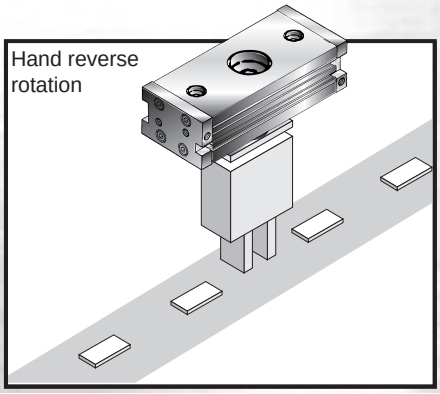

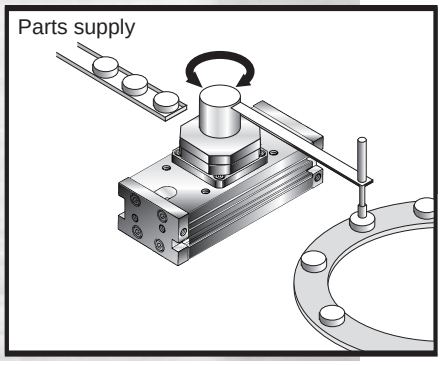

Variation and option selection table

◎ : Option variation (check category 2)
○ : C5 compatible (check category 3)
△ : Available depending on conditions (estimation)
: Not available

			Clean room specifications	
			Vacuum treatment	Vacuum treatment
		Code	P73	P53
Variation	Basic	Blank	◎	○
	High accuracy	K	◎	○
	Fine speed	F	◎	
Port thread	NPT (50, 80)	N	○	○
	G (50, 80)	G	○	○

MEMO

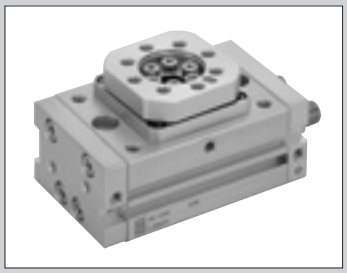

Table rotary actuator
Basic/high accuracy

GRC/GRC-K Series

● Size: 5/10/20/30/50/80

JIS symbol

RoHS CAD

Structure and material restriction

	Structure	Material restriction			Model No.
P7 Series	Vacuum treatment				P73
P5 Series (custom order product)	Vacuum treatment	Copper-based materials prohibited	Silicon-based materials prohibited	Halogen-based materials prohibited (fluorine, chlorine, bromine)	P53

Specifications

Descriptions			GRC-5	GRC-10 GRC-K-10	GRC-20 GRC-K-20	GRC-30 GRC-K-30	GRC-50 GRC-K-50	GRC-80 GRC-K-80
Size			5	10	20	30	50	80
Theoretical torque *1		N·m	0.5	1.0	2.0	3.0	5.2	8.1
Actuation			Rack and pinion mechanism					
Working fluid			Compressed air					
Max. working pressure		MPa	1.0					
Min. working pressure *2	Basic	MPa	0.1					
	High accuracy	MPa	–	0.15		0.1		
Proof pressure		MPa	1.6					
Ambient temperature		°C	0 (32°F) to 60 (no freezing)					
Port size			M5				Rc1/8	
Port size (relief port)			M5					
Cushion			Rubber cushion					
Allowable energy absorption	Basic/high accuracy	J	0.005	0.008	0.03		0.04	0.11
Lubrication			Not available					
Volumetric capacity *3	90°	cm³	1.3	3.5	7.0	10.5	18.1	28.3
	180°	cm³	3.4	6.6	13.4	20.0	34.4	53.7
Oscillating angle adjusting range *4	90°		0° to 100°					
	180°		90° to 190°					
Oscillating time adjusting range *5		s/90°	0.2 to 1.5					
Table deflection (reference value) *6	Basic		±0.17°			±0.23°	±0.26°	±0.32°
	High accuracy		–	±0.026°				

*1: The theoretical torque is for the working pressure of 0.5 MPa.
*2: To push through the rubber cushion in the basic and high accuracy type, the working pressure of 0.3 MPa or greater is required.
*3: Volumetric capacity is for the maximum oscillating angle within the adjusting range.
*4: The oscillating angle adjusting range indicates the values when adjusted by the stopper bolts on both sides.
*5: The oscillating time adjusting range is for the working pressure of 0.5 MPa.
*6: Displacements of the table at 100 mm away from the center of rotation are shown on the technical data (page 302).

Switch specifications

● 1-color/2-color display

Descriptions	Proximity 2-wire				Proximity 3-wire			
	T1H/T1V	T2H/T2V	T2YH/T2YV	T2WH/T2WV	T3H/T3V	T3PH/T3PV	T3YH/T3YV	T3WH/T3WV
Applications	Programmable controller, relay, small solenoid valve	Programmable controller			Programmable controller, relay			
Output method	-				NPN output	PNP output	NPN output	
Power supply voltage	-				10 to 28 VDC			
Load voltage	85 to 265 VAC	10 to 30 VDC		24 VDC ±10%	30 VDC or less			
Load current	5 to 100 mA	5 to 20 mA (*2)			100 mA or less		50 mA or less	
Indicator lamp	LED (Lit when ON)	LED (Lit when ON)	Red/green LED (Lit when ON)	Red/green LED (Lit when ON)	LED (Lit when ON)	Yellow LED (Lit when ON)	Red/green LED (Lit when ON)	
Leakage current	1 mA or less with 100 VAC 2 mA or less with 200 VAC	1 mA or less			10 μA or less			
Weight g	1 m: 33 3 m: 87 5 m: 142	1 m: 18 3 m: 49 5 m: 80	1 m: 33 3 m: 87 5 m: 142	1 m: 18 3 m: 49 5 m: 80	1 m: 18 3 m: 49 5 m: 80		1 m: 33 3 m: 87 5 m: 142	1 m: 18 3 m: 49 5 m: 80

*1: Refer to page 309 for detailed switch specifications and dimensions.
*2: Max. load current: 20mA at 25°C.The current is lower than 25 mA if the operating ambient temperature around the switch is higher than 20˚C. (60 to 5 mA at 10°C)

Minimum oscillating angle with switch

Size	5	10	20	30	50	80
T proximity T 2-color display	20°	15°	17.5°	12.5°	12.5°	12.5°

Theoretical torque table

(Unit: N·m)

Size	Working pressure (MPa)									
	0.1	0.2	0.3	0.4	0.5	0.6	0.7	0.8	0.9	1.0
5	-	0.2	0.3	0.4	0.5	0.6	0.7	0.8	0.9	1.0
10	-	0.4	0.6	0.8	1.0	1.2	1.4	1.6	1.8	2.0
20	-	0.8	1.2	1.6	2.0	2.4	2.8	3.2	3.6	4.0
30	0.6	1.2	1.8	2.4	3.0	3.6	4.2	4.8	5.4	6.0
50	1.0	2.1	3.1	4.1	5.2	6.2	7.3	8.3	9.3	10.4
80	1.6	3.2	4.9	6.5	8.1	9.7	11.3	13.0	14.6	16.2

Product weight

(Unit: kg)

Oscillating angle / Model No.	90°		180°		Outer mount shock absorber weight	Switch weight (per switch)
	Basic	High accuracy	Basic	High accuracy		
GRC- 5	0.39	-	0.43	-	0.20	0.02
GRC-10	0.48	0.50	0.56	0.58	0.30	
GRC-20	0.78	0.80	0.88	0.90	0.40	
GRC-30	1.05	1.30	1.25	1.50	0.50	
GRC-50	1.80	2.10	2.10	2.40	0.60	
GRC-80	2.30	2.60	2.70	3.00	0.70	

How to order

● Without switch (Magnet for switch incorporated)

GRC - 10 - 90 ——— P73

● With switch (Magnet for switch incorporated)

GRC - 30 - 180 - T2H* - R - P73

Ⓐ Model No.
Ⓑ Size
Ⓒ Oscillating angle
Ⓓ Switch model No.
Ⓔ Switch quantity
Ⓕ Clean room Specifications

Code	Content
Ⓐ Model No.	
GRC	Basic
GRC-K	High accuracy

Ⓑ Size (0.5 MPa)

Model No.	Theoretical torque	GRC	GRC-K
5	0.5 [N·m]	●	-
10	1.0 [N·m]	●	●
20	2.0 [N·m]	●	●
30	3.0 [N·m]	●	●
50	5.2 [N·m]	●	●
80	8.1 [N·m]	●	●

Ⓒ Oscillating angle

90	90°
180	180°

Ⓓ Switch model No.

Lead wire straight	Lead wire L-shaped	Contact	Voltage AC	Voltage DC	Display	Lead wire
T1H*	**T1V***	Proximity	●		1-color display	2 wires
T2H*	**T2V***	Proximity		●	1-color display	2 wires
T3H*	**T3V***	Proximity		●	1-color display	3 wires
T3PH*	**T3PV***	Proximity		●	1-color display	3 wires
T2WH*	**T2WV***	Proximity		●	2-color display	2 wires
T2YH*	**T2YV***	Proximity		●	2-color display	2 wires
T3WH*	**T3WV***	Proximity		●	2-color display	3 wires
T3YH*	**T3YV***	Proximity		●	2-color display	3 wires

*** Lead wire length**

Blank	1m (standard)
3	3 m (option)
5	5 m (option)

Ⓔ Switch quantity

R	1 With clockwise rotation
L	1 With counterclockwise rotation
D	2

Ⓕ Clean room specifications

	Structure	Material restriction
P73	Vacuum treatment	-
P53	Vacuum treatment	Copper-based/silicon-based/halogen-based materials (fluorine, chlorine, bromine) are prohibited

⚠ Precautions for model No. selection

*1: Port position of basic high accuracy is provided on side surface. Other ports are plugged.
*2: "P53" is a custom order product.
*3: Refer to page 284 for combination of variations/options.

[Example of model No.]

GRC-10-180-T2V-D-P73

Double acting

Ⓐ Model No. : Basic
Ⓑ Size : 10
Ⓒ Oscillating angle : 180°
Ⓓ Switch model No. : Proximity/2 wires
Radial lead wire with 1 m lead wire
Ⓔ Switch quantity : 2
Ⓕ Clean room specifications: Vacuum treatment

MEMO

SCPD3
SCM
SSD2
MDC2
SMG
LCM
LCR
LCG
LCX
STM
STG
STR2
MRL2
GRC
Cylinder switch
MN3E MN4E
4GA/B
M4GA/B
MN4GA/B
F.R (module unit)
Clean F.R
Precision R
Press gauge Diff. press gauge
Electro-pneumatic R
Speed controller
Auxiliary valve
Fitting/ tube
Clean air unit
Pressure sensor
Flow rate sensor
Valve for air blow
Ending

Dimensions (size 5, 10 N·m)

- GRC-5, 10 basic
- GRC-K-5, 10 high accuracy

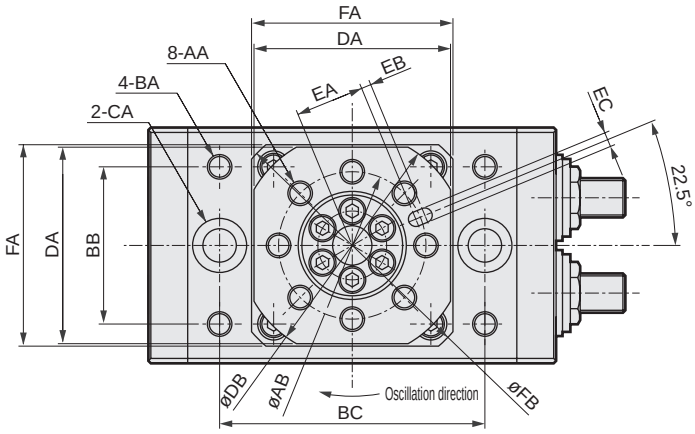

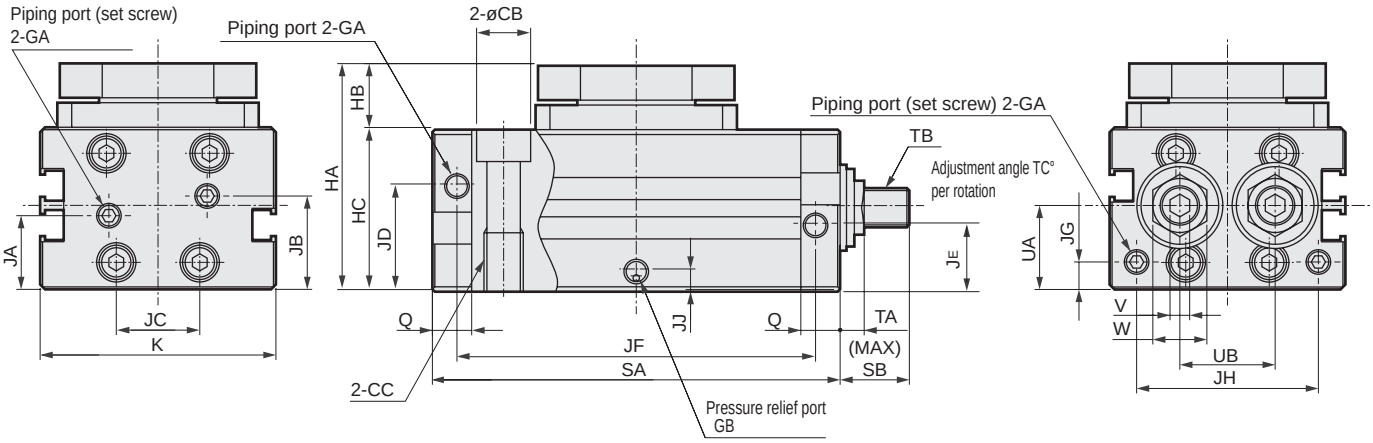

Size	AA	AB	BA	BB	BC	CA	CB	CC	DA	DB	EA	EB	EC	FA	FB	GA
5	M4 Depth 7	24	M4 Depth 6.5	26	48	Spot face ø9.5 depth 5.4	5.2	M6 Depth 12	35	42	11	2	$3^{+0.07}_{+0.02}$ depth 3.5	36	48h9	M5 depth 4
10	M5 Depth 7	30	M5 Depth 7	32	54	Spot face ø11 depth 6.5	6.6	M8 Depth 12	40	46	14	2	$3^{+0.07}_{+0.02}$ depth 3.5	41	54h9	M5 depth 4

Size	PA	PB	Q	SA		SB	TA	TB	TC	UA	UB	V	W	X
				90°	180°									
5	12H9	3.5	8	73	90	14	6.5	M6 × 1	8.7	16.6	16	3	10	12.6
10	18H9	2.5	8	83	107	15	4.9	M8 × 0.75	4.9	17.1	19.4	4	11	13.1

Dimensions (size 5, 10 N·m)

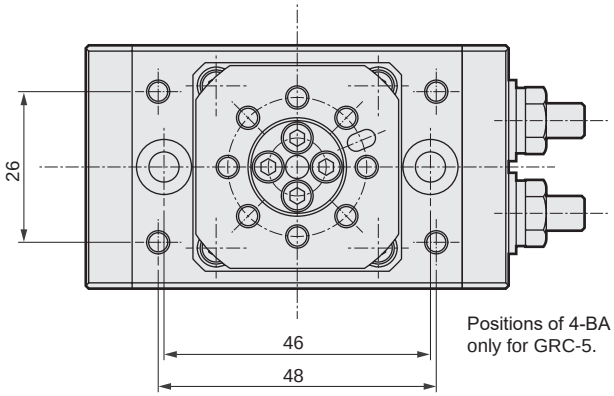

Positions of 4-BA and 2-CA differ only for GRC-5.

- GRC-5, 10 basic
- GRC-K-5, 10 high accuracy

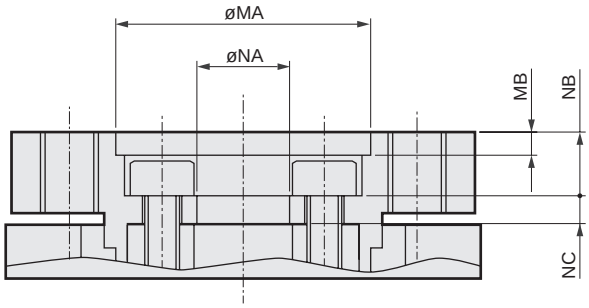

A section details

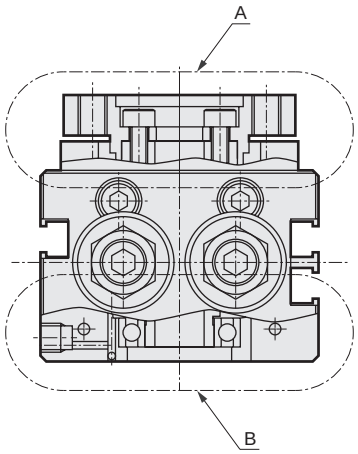

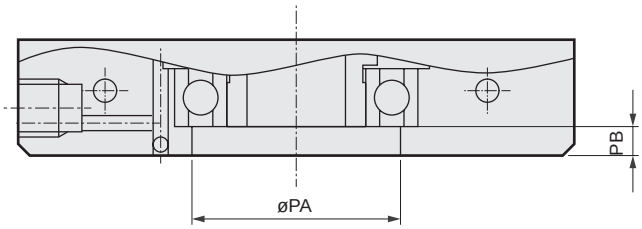

B section details

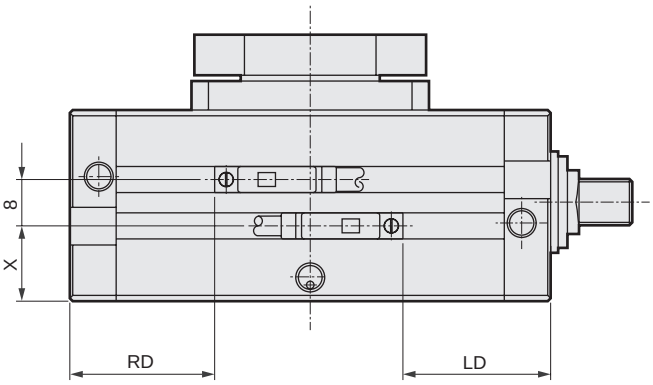

Switch mounting position

	GB	HA	HB	HC	JA	JB	JC	JD	JE	JF 90°	JF 180°	JG	JH	JJ	K	MA	MB	NA	NB	NC
	M5 depth 4	43	13	30	15	18	16	21	11.5	65	82	5.6	29	4.1	42	17H9	2	4H9	5.5	2.4
	M5 depth 3.5	46	13	33	15	19	20	21.5	12	75	99	5.6	37	4.1	48	22H9	2	8H9	5.5	2.4

	LD 90°	LD 180°	RD 90°	RD 180°
	21.5	25.5	22.5	25.5
	24.5	30.5	26	30.5

SCPD3
SCM
SSD2
MDC2
SMG
LCM
LCR
LCG
LCX
STM
STG
STR2
MRL2
GRC
Cylinder switch
MN3E MN4E
4GA/B
M4GA/B
MN4GA/B
F.R (module unit)
Clean F.R
Precision R
Press gauge Diff. press gauge
Electro-pneumatic R
Speed controller
Auxiliary valve
Fitting/ tube
Clean air unit
Pressure sensor
Flow rate sensor
Valve for air blow
Ending

Dimensions (size 20 - 80 N·m)

- GRC-20 to 80 basic
- GRC-K-20 to 80 high accuracy

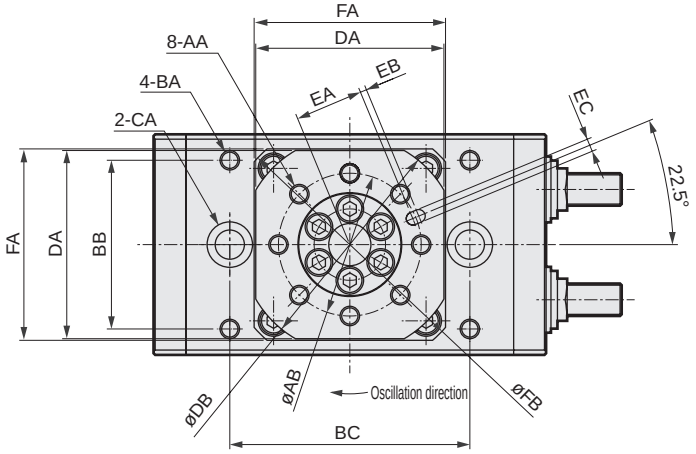

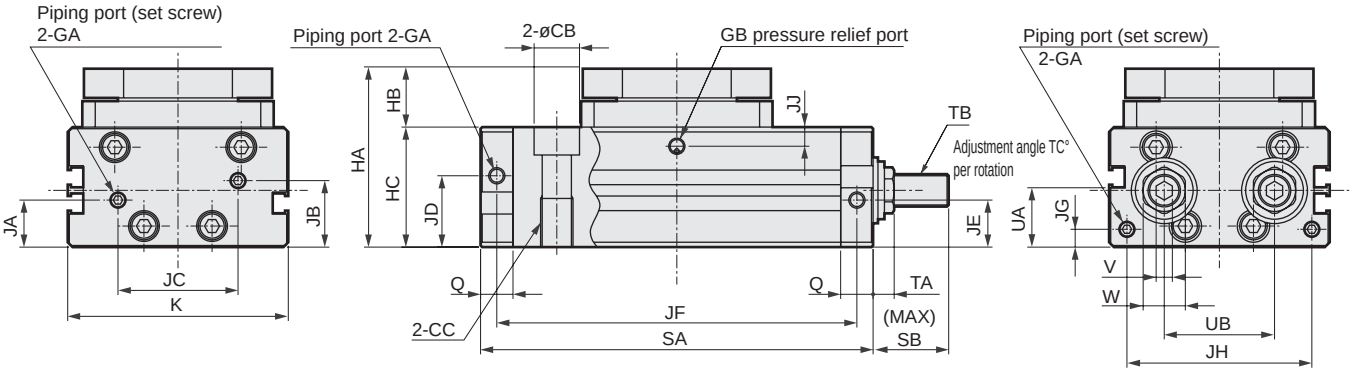

Size	AA	AB	BA	BB	BC	CA	CB	CC	DA	DB	EA	EB	EC	FA	FB	GA
20	M6 Depth 9	36	M6 Depth 8	42	62	Spot face ø11 depth 6.5	6.9	M8 Depth 12	47	55	17	2	$4^{+0.07}_{+0.02}$ depth 4.5	48	64h9	M5 depth 4
30	M6 Depth 9	44	M6 Depth 8	52	74	Spot face ø14 depth 8.6	8.7	M10 Depth 15	58	67	21	2	$4^{+0.07}_{+0.02}$ depth 4.5	59	78h9	M5 depth 4
50	M8 Depth 13	50	M8 Depth 12	60	88	Spot face ø17.5 depth 10.8	10.5	M12 Depth 18	66	74	24	2	$5^{+0.07}_{+0.02}$ depth 5.5	69	92h9	Rc1/8
80	M8 Depth 13	54	M8 Depth 12	66	94	Spot face ø17.5 depth 10.8	10.5	M12 Depth 18	69	80	26	2	$5^{+0.07}_{+0.02}$ depth 5.5	76	101h9	Rc1/8

Size	PA	PB	Q	SA		SB	TA	TB	TC	UA	UB	V	W	X
				90°	180°									
20	20H9	2.5	10	96	125	17	6.1	M10 × 1	5.7	17.6	24	5	13	13.6
30	26H9	2.5	10	121	165	25	6.1	M10 × 1	3.8	17.6	34	5	13	13.6
50	28H9	4.5	15	144	192	29.5	7	M12 × 1	3.5	24.6	35	6	14	20.6
80	36H9	3.5	15	150	198	29.5	7	M12 × 1	3.5	27.1	36	6	14	23.1

Dimensions (size 20 - 80 N·m)

- GRC-20 to 80 basic
- GRC-K-20 to 80 high accuracy

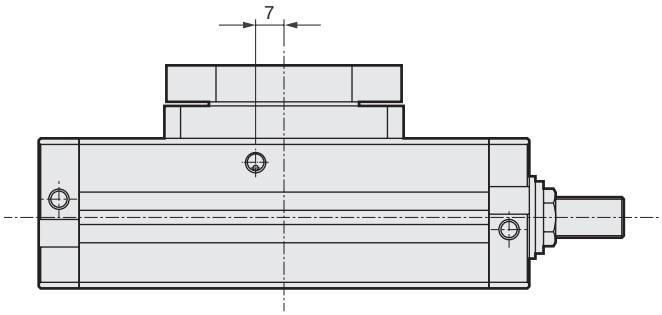

Position of GB differs only for GRC-30 and GRC-K-30.

GRC-30/GRC-K-30

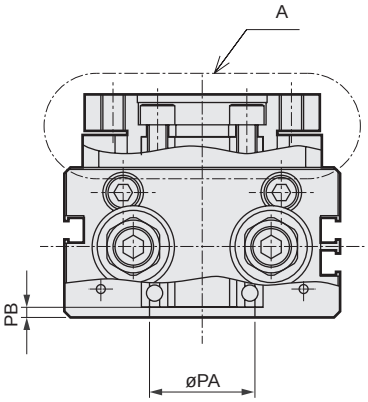

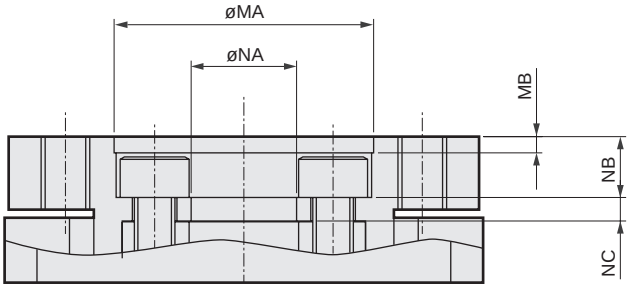

A section details

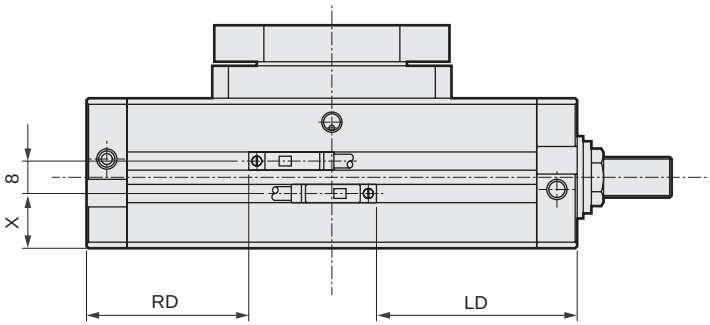

Switch mounting position

	GB	HA	HB	HC	JA	JB	JC	JD	JE	JF 90°	JF 180°	JG	JH	JJ	K	MA	MB	NA	NB	NC
	M5 depth 4	53	16	37	14.5	20.5	27	22	13	86	115	5.6	47	5.8	58	27H9	2	11H9	6.5	3.9
	M5 depth 4	55	18	37	14.5	20.5	37	22	13	111	155	5.6	57	6.2	68	32H9	2	13H9	7.5	2.9
	M5 depth 4	71	23	48	21.5	27.5	36	32.5	17.5	129	177	8.1	58	8.5	75	37H9	4	14H9	10.5	5.3
	M5 depth 4	80	25	55	24	30	40	35	19	135	183	8.1	58	12.9	80	40H9	3	17H9	9.5	4.4

	LD 90°	LD 180°	RD 90°	RD 180°
	31	37.5	31	37.5
	38.5	49.5	40	49.5
	48.5	61	51	61
	51.5	64	54	64

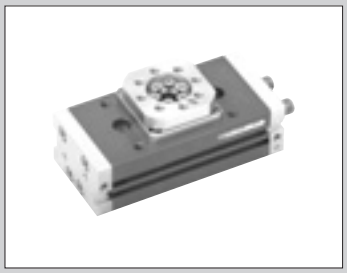

Table type rotary actuator
Fine speed/high accuracy fine speed

GRC-F/GRC-KF Series

● Size: 5/10/20/30/50/80

JIS symbol

RoHS CAD

Structure and material restriction

	Structure	Model No.
P7 Series	Vacuum treatment	P73

Specifications

Descriptions			GRC-F-5	GRC-F-10 GRC-KF-10	GRC-F-20 GRC-KF-20	GRC-F-30 GRC-KF-30	GRC-F-50 GRC-KF-50	GRC-F-80 GRC-KF-80
Size			5	10	20	30	50	80
Theoretical torque *1 N·m			0.5	1.0	2.0	3.0	5.2	8.1
Actuation			Rack and pinion mechanism					
Working fluid			Compressed air					
Max. working pressure MPa			1.0					
Min. working pressure MPa	Basic		0.1					
	High accuracy		–	0.15		0.1		
Proof pressure MPa			1.6					
Ambient temperature °C			5 to 60					
Allowable absorbed energy J			0.005	0.008	0.03		0.04	0.11
Cushion	Basic high accuracy		Rubber cushion					
Oscillating angle adjusting range *2	Basic high accuracy	90° specifications	0° to 100°					
		180° specifications	90° to 190°					
Oscillating time adjusting range s/90°			0.2 to 25					
Port size			M5				Rc1/8	
Port size (relief port)			M5					
Lubrication			Lubrication not possible					

*1: The theoretical torque is for the working pressure of 0.5 MPa.
*2: The angle adjusting range applies when adjusted with the stopper bolts (shock absorbers) on both sides.
If a shock absorber is provided, the fine speed specifications will not apply to the shock absorber section.

Switch specifications

● 1-color/2-color display

Descriptions	Proximity 2-wire				Proximity 2-wire			
	T1H/T1V	T2H/T2V	T2YH/T2YV	T2WH/T2WV	T3H/T3V	T3PH/T3PV	T3YH/T3YV	T3WH/T3WV
Applications	Programmable controller, relay, small solenoid valve	Programmable controller			Programmable controller, relay			
Output method	-				NPN output	PNP output	NPN output	
Power supply voltage	-				10 to 28 VDC			
Load voltage	85 to 265 VAC	10 to 30 VDC		24 VDC ±10%	30 VDC or less			
Load current	5 to 100 mA (*2)	5 to 20 mA (*2)			100 mA or less		50 mA or less	
Indicator lamp	LED (Lit when ON)	LED (Lit when ON)	Red/green LED (Lit when ON)	Red/green LED (Lit when ON)	LED (Lit when ON)	Yellow LED (Lit when ON)	Red/green LED (Lit when ON)	
Leakage current	1 mA or less with 100 VAC 2 mA or less with 200 VAC	1 mA or less			10 μA or less			
Weight g	1 m: 33 3 m: 87 5 m: 142	1 m: 18 3 m: 49 5 m: 80	1 m: 33 3 m: 87 5 m: 142	1 m: 18 3 m: 49 5 m: 80	1 m: 18 3 m: 49 5 m: 80		1 m: 33 3 m: 87 5 m: 142	1 m: 18 3 m: 49 5 m: 80

*1: Refer to page 309 for detailed switch specifications and dimensions.
*2: Max. load current: 20mA at 25°C.The current is lower than 25 mA if the operating ambient temperature around the switch is higher than 20˚C.
(60 to 5 mA at 10°C)

How to order

● Without switch (Magnet for switch incorporated)

GRC-F - 10 - 90 ——— P73

● With switch (Magnet for switch incorporated)

GRC-F - 30 - 180 - T2H* - R - P73

Ⓐ Model No.
Ⓑ Size
Ⓒ Oscillating angle
Ⓓ Switch model No.
Ⓔ Switch quantity
Ⓕ Clean room specifications

Code	Content
Ⓐ Model No.	
GRC-F	Basic
GRC-KF	High accuracy

Ⓑ Size

Model No.	Theoretical torque	GRC-F	GRC-KF
5	0.5 [N·m]	●	-
10	1.0 [N·m]	●	●
20	2.0 [N·m]	●	●
30	3.0 [N·m]	●	●
50	5.2 [N·m]	●	●
80	8.1 [N·m]	●	●

Ⓒ Oscillating angle	
90	90°
180	180°

Ⓓ Switch model No.

Lead wire straight	Lead wire L-shaped	Contact	Voltage AC	Voltage DC	Indicator	Lead wire
T1H*	**T1V***	Proximity	●		1-color display	2 wires
T2H*	**T2V***			●		2 wires
T3H*	**T3V***			●		3 wires
T3PH*	**T3PV***			●		3 wires
T2WH*	**T2WV***			●	2-color display	2 wires
T2YH*	**T2YV***			●		2 wires
T3WH*	**T3WV***			●		3 wires
T3YH*	**T3YV***			●		3 wires

*** Lead wire length**	
Blank	1 m (standard)
3	3 m (option)
5	5 m (option)

Ⓔ Switch quantity	
R	1 With clockwise rotation
L	1 With counterclockwise rotation
D	2

Ⓕ Clean room specifications		
	Structure	Material restriction
P73	Vacuum treatment	-

⚠ Precautions for model No. selection

*1: Port position of basic high accuracy is provided on side surface. Other ports are plugged.
*2: Refer to page 284 for combination of variations/options.

[Example of model No.]
GRC-F-10-180-T2V-D-P73
Double acting

Ⓐ Model No. : Fine speed
Ⓑ Size : 10
Ⓒ Oscillating angle : 180°
Ⓓ Switch model No. : Proximity/2 wires radial lead wire/ lead wire 1 m
Ⓔ Switch quantity : 2
Ⓕ Clean room specifications: Vacuum treatment

Dimensions

Dimensions are the same as the basic GRC Series or the high load GRC-K Series. Refer to pages 290 to 293.

Selection method

Select based on the following procedures.

Step 1 Oscillating time confirmation

↓

Step 2 Select the size (torque).
(1) Static load
(2) Resistance load
(3) Inertia load

↓

Step 3 Allowable energy confirmation

↓

Step 4 Allowable load confirmation
(1) Thrust load
(2) Radial load
(3) Moment load

Step 1 Oscillating time confirmation

If the oscillating time is set outside of the specified range, the actuator's operation may become unstable, or the actuator could be damaged. Always set the oscillating time within the specified oscillating time adjusting range.

	Using with 90°	Using with 180°
Oscillating time (s)	0.2 to 1.5	0.4 to 3.0

Step 2 Size (torque) selection

Selection method is roughly categorized into three load.
In each case, the required torque must be calculated. If the load is a compound load, add each torque to calculate the required torque.
Select size from theoretical torque table or actual torque diagram per working pressure to meet required torque.

(1) Static load (Ts)
When static pushing force is required for clamp, etc.

$$T_S = F_S \times L$$

Ts : Required torque (N·m)
Fs : Required force (N)
L : Length from center of rotation to pressure cone apex (m)

(2) Resistance load (TR)
When forces caused by frictional force, gravity and another external force are applied.

$$T_R = K \times F_R \times L$$

TR : Required torque (N·m)
K : Margin factor with { no load fluctuation: K = 2 / with load fluctuation: K = 5 }
FR : Required force (N)
L : Length from center of rotation to pressure cone apex (m)

(3) Inertia load (TA)
to rotate object

$$T_A = 5 \times I \times \dot{\omega}$$

$$\dot{\omega} = \frac{2\theta}{t^2}$$

TA : Required torque (N·m)
I : Moment of inertia (kg·m²)
$\dot{\omega}$: Maximum angular speed (rad/s²)
θ : Oscillating angle (rad)
t : Oscillating time (s)

Calculate moment of inertia using moment of inertia and oscillating time (page 299) or the figure for moment of inertia calculation (page 300).

Step 3 Allowable energy confirmation

When using an inertial load, if the load's kinetic energy exceedsthe allowable value at the oscillating end, the actuator could bedamaged. Select one within allowable energy according to Table 1.
If energy is too large, stop load with external shock absorber, etc.

$$E = \frac{1}{2} \times I \times \omega^2$$

$$\omega = \frac{2\theta}{t}$$

E : Kinetic energy (J)
I : Moment of inertia (kg·m²)
ω : Angular speed at the end of oscillation (rad/s)
θ : Oscillating angle(rad)
t : Oscillating time (s)

Calculate moment of inertia using moment of inertia and oscillating time (page 299) or the figure for moment of inertia calculation (page 300).

Selection method

Step 4 Allowable load confirmation

If the load directly applies to the table, it should be within the allowable range in Table 2.
If a combined load applies, the total of the ratio for allowable value per load should be 1.0 or smaller.
Load can be grouped into the following three types.
(1) Thrust load (axial load)

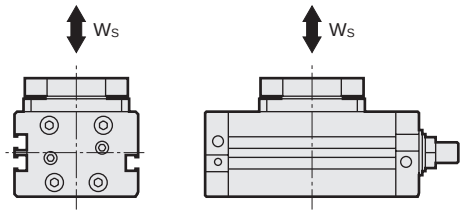

(2) Radial load (lateral load)

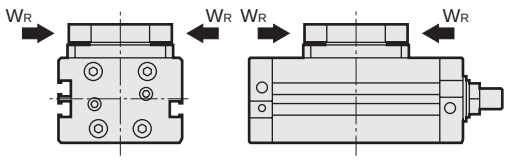

(3) Moment load

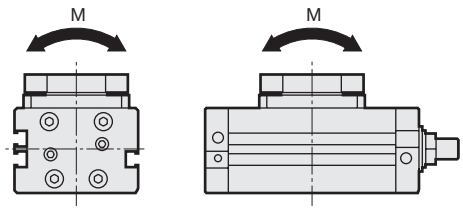

Calculate each type. Then, assign the values into the following formula.

$$\frac{W_s}{W_{smax}} + \frac{W_R}{W_{Rmax}} + \frac{M}{M_{max}} \leqq 1.0$$

Ws : Thrust load (N)
WR : Radial load (N)
M : Moment load (N·m)
Wsmax : Allowable thrust load (N)
WRmax : Allowable radial load (N)
Mmax : Allowable moment load (N·m)

Allowable absorbed energy and allowable load are shown in the following table.

Table 1 Allowable absorbed energy value (J)

Size	5	10	20	30	50	80
Basic/high accuracy	0.005	0.008	0.03		0.04	0.11

Table 2 Allowable load $W_{Smax.}$ $W_{Rmax.}$ M_{max}

Size		5	10	20	30	50	80
Thrust load W_{Smax} [N]	Basic	50	80	140	200	450	580
	High accuracy	-	120	220	440	550	650
Radial load W_{Rmax} [N]	Basic	30	80	150	200	320	400
	High accuracy	-	100	160	240	380	480
Moment load M_{max} [N·m]	Basic	1.5	2.5	4.0	5.5	10.0	13.0
	High accuracy	-	3.0	5.0	7.0	12.0	15.0

Selection example

When rectangular parallelepiped load is applied

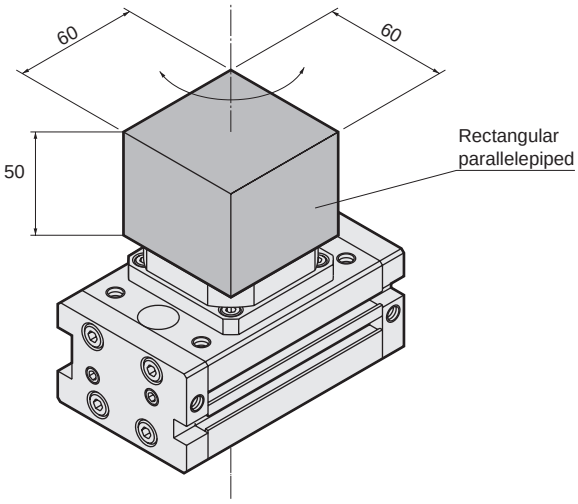

[Operation conditions]

Pressure	: 0.5 MPa
Oscillating angle	: 90°
Oscillating time	: 0.6 s
Load (material	: aluminum alloy)
[Rectangular parallelepiped]	: 0.5 kg

Step 1 Oscillating time confirmation

Oscillating time is 0.6 (s/90°) according to operation conditions. Since oscillating time is within adjusting range 0.2 to 1.5 (s/90°), go to next step.

Step 2 Select the size (torque)

First, calculate the moment of inertia (I) due to inertia load.
[Rectangular parallelepiped]

$$I = 0.5 \times \frac{0.06^2}{6} = 3 \times 10^{-4}\ (\mathrm{kg \cdot m^2}) \quad \ldots\ldots(1)$$

Then, calculate the maximum angular speed ($\dot{\omega}$).

Based on the conditions $\theta = 90° = \frac{\pi}{2}$(rad), $t = 0.6$ (s)

Therefore,

$$\dot{\omega} = \frac{2\theta}{t^2} = \frac{\pi}{0.6^2} = 8.73\ (\mathrm{rad/s^2}) \quad \ldots\ldots\ldots(2)$$

Therefore, inertia load (T_A) from (1) and (2)

$T_A = 5 \times 3 \times 10^{-4} \times 8.73$
$= 0.0131$ (N·m)……..…(3)

According to (3) value and operational conditions and torque at 0.5 (MPa)

GRC-5-90 ……..……(A) is selected.

Step 3 Allowable energy confirmation

Calculate the kinetic energy. Check if the value is within the allowable energy range.
Calculate the angular speed at the end of oscillation ω.

Based on the conditions $\theta = 90° = \frac{\pi}{2}$(rad), $t = 0.6$ (s)

Therefore,

$$\omega = \frac{2\theta}{t} = \frac{\pi}{0.6} = 5.24\ (\mathrm{rad/s})$$

Therefore, kinetic energy (E) is

$$E = \frac{1}{2} \times 3 \times 10^{-4} \times 5.24^2$$

$= 0.00412$ (J) ……(4)

From (4) and (A) selected in Step 2

GRC-5-90 ……..……(B) can be selected.

Step 4 Allowable load confirmation

Finally, calculate the load applied to the table. Check if the value is within the allowable range.

[Thrust load]
Thrust load (Ws),
$W_s = 0.5 \times 9.8 = 4.9$ (N) ……(5)

[Radial load]
Since no radial load exists,
$W_R = 0$ (N) ……..(6)

[Moment load]
Since no moment load exists,
$M = 0$ (N·m) ……(7)

According to (5), (6), (7), and (B)

$$\frac{W_s}{W_{smax}} + \frac{W_R}{W_{Rmax}} + \frac{M}{M_{max}}$$

$$= \frac{4.9}{50} + \frac{0}{30} + \frac{0}{1.5} = 0.098 \leqq 1.0 \quad \ldots\ldots(C)$$

the total load value is within the allowable load range according to (B) and (C). Hence,

GRC-5-90 is selected.

1. Energy absorbing performance and oscillating time

(1) For rubber cushion, the relationship between the moment of inertia and the oscillating time is shown in the diagram below. Always use the product within the lower right range of the graph as the shaft may break otherwise. Refer to this when you select a model.

● Basic high accuracy

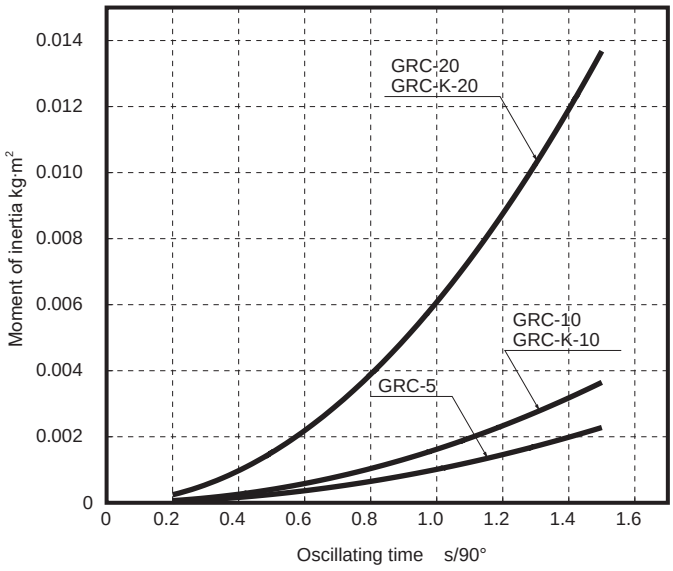

Size 5, 10, 20

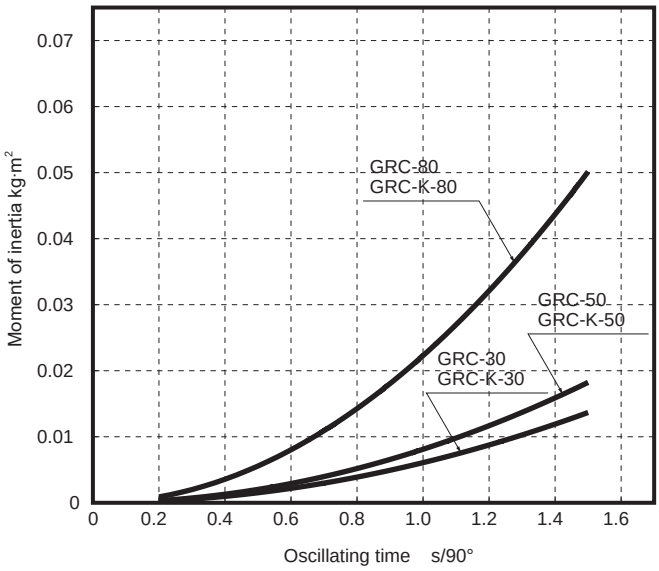

Size 30, 50, 80

SCPD3
SCM
SSD2
MDC2
SMG
LCM
LCR
LCG
LCX
STM
STG
STR2
MRL2
GRC
Cylinder switch
MN3E MN4E
4GA/B
M4GA/B
MN4GA/B
F.R (module unit)
Clean F.R
Precision R
Press gauge Diff. press gauge
Electro-pneumatic R
Speed controller
Auxiliary valve
Fitting/ tube
Clean air unit
Pressure sensor
Flow rate sensor
Valve for air blow
Ending

2. Figure for moment of inertia calculation

When the rotational axis goes through the workpiece

Shape	Sketch	Requirements	Moment of inertia I kg·m²	Radius of gyration K_1^2	Remarks
Dial plate	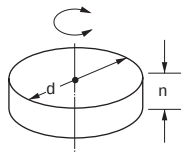	● Diameter d (m) ● Weight M (kg)	$I = \frac{Md^2}{8}$	$\frac{d^2}{8}$	● No mounting direction ● For sliding use, contact CKD.
Circular stepped plate	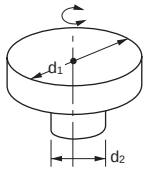	● Diameter d_1 (m) d_2 (m) ● Weight d_1 section M_1 (kg) d_2 section M_2 (kg)	$I = \frac{1}{8}(M_1d_1^2 + M_2d_2^2)$	$\frac{d_1^2 + d_2^2}{8}$	● Ignore when d_2 section is extremely small compared to d_1 section.
Bar (center of rotation at end)	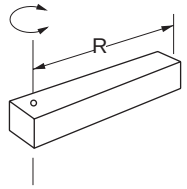	● Bar length R (m) ● Weight M (kg)	$I = \frac{MR^2}{3}$	$\frac{R^2}{3}$	● When this is horizontally mounted. ● If this is vertically mounted, the oscillating time changes.
Thin rod	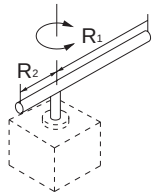	● Bar length R_1 R_2 ● Weight M_1 M_2	$I = \frac{M_1 \cdot R_1^2}{3} + \frac{M_2 \cdot R_2^2}{3}$	$\frac{R_1^2 + R_2^2}{3}$	● When this is horizontally mounted. ● If this is vertically mounted, the oscillating time changes.
Bar (center of rotation is center of gravity)	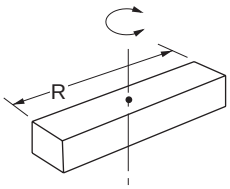	● Bar length R (m) ● Weight M (kg)	$I = \frac{MR^2}{12}$	$\frac{R^2}{12}$	● No mounting direction
Thin rectangle plate (rectangular parallelepiped)	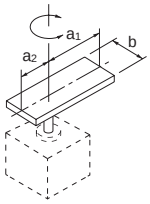	● Plate length a_1 a_2 ● Side length b ● Weight M_1 M_2	$I = \frac{M_1}{12}(4a_1^2 + b^2) + \frac{M_2}{12}(4a_2^2 + b^2)$	$\frac{(4a_1^2 + b^2) + (4a_2^2 + b^2)}{12}$	● When this is horizontally mounted. ● If this is vertically mounted, the oscillating time changes.
Rectangular parallelepiped	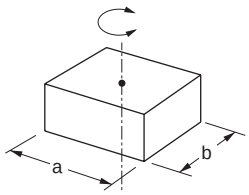	● Side length a (m) b (m) ● Weight M (kg)	$I = \frac{M}{12}(a^2 + b^2)$	$\frac{a^2 + b^2}{12}$	● No mounting direction ● For sliding use, contact CKD.
Concentrated load	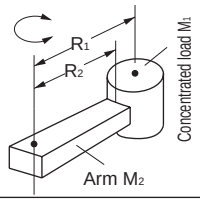	● Shape of concentrated load ● Length to center of gravity of concentrated load R_1 ● Arm length R_2 (m) ● Concentrated load weight M_1 (kg) ● Arm weight M_2 (kg)	$I = M_1(R_1^2 + k_1^2) + \frac{M_2R_2^2}{3}$	Calculate K_1^2 according to shape of concentrated load	● When this is horizontally mounted. ● When M_2 is extremely small compared to M_1, you can assume $M_2 = 0$.

How to convert load J_L to rotary actuator shaft rotation when using with gears

Gear	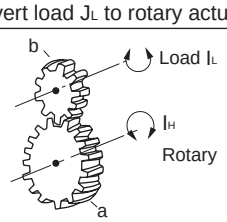	● Rotary side gear (number of teeth) a Load side gear (number of teeth) b ● Load inertia Moment N·m	Moment of inertia of load rotary shaft rotation $I_H = \left(\frac{a}{b}\right)^2 I_L$		● When the size of the gear wheel is increased, its moment of inertia should be taken into consideration.

● When the rotational axis is off the workpiece

Shape	Sketch	Requirements	Moment of inertia I kg·m²	Remarks
Rectangular parallelepiped	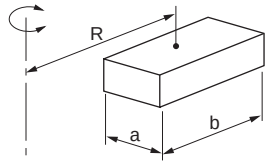	● Side length a (m) ● Distance from the rotational axis to the load center b (m) R (m) ● Weight M (kg)	$I = \frac{M}{12}(a^2 + b^2) + MR^2$	● Same for cube
Hollow rectangular parallelepiped	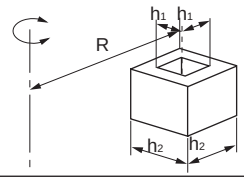	● Side length h_1 (m) h_2 (m) ● Distance from the rotational axis to the load center R (m) ● Weight M (kg)	$I = \frac{M}{12}(h_1^2 + h_2^2) + MR^2$	● Cross section is for cube only
Cylinder	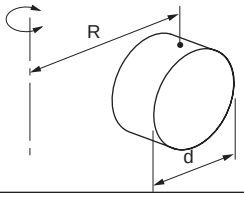	● Diameter d (m) ● Distance from the rotational axis to the load center R (m) ● Weight M (kg)	$I = \frac{Md^2}{16} + MR^2$	
Hollow cylinder	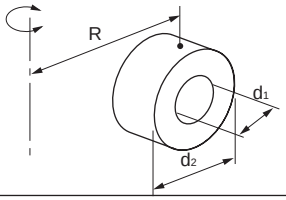	● Diameter d_1 (m) d_2 (m) ● Distance from the rotational axis to the load center R (m) ● Weight M (kg)	$I = \frac{M}{16}(d_1^2 + d_2^2) + MR^2$	

* To find moment of inertia, first convert load, jig, etc., to simple shapes with modeling, then calculate values. For the combined load, calculate each inertial moment and their total.

SCPD3
SCM
SSD2
MDC2
SMG
LCM
LCR
LCG
LCX
STM
STG
STR2
MRL2
GRC
Cylinder switch
MN3E MN4E
4GA/B
M4GA/B
MN4GA/B
F.R (module unit)
Clean F.R
Precision R
Press gauge Diff. press gauge
Electro-pneumatic R
Speed controller
Auxiliary valve
Fitting/ tube
Clean air unit
Pressure sensor
Flow rate sensor
Valve for air blow
Ending

3. Table deflection (reference value)

The displacement (reference value) of the table at 100 mm away from the center of rotation when moment load is applied to GRC is shown below. (It is assumed that the table is stationary and not rotating.)

Measuring method

Table deflection

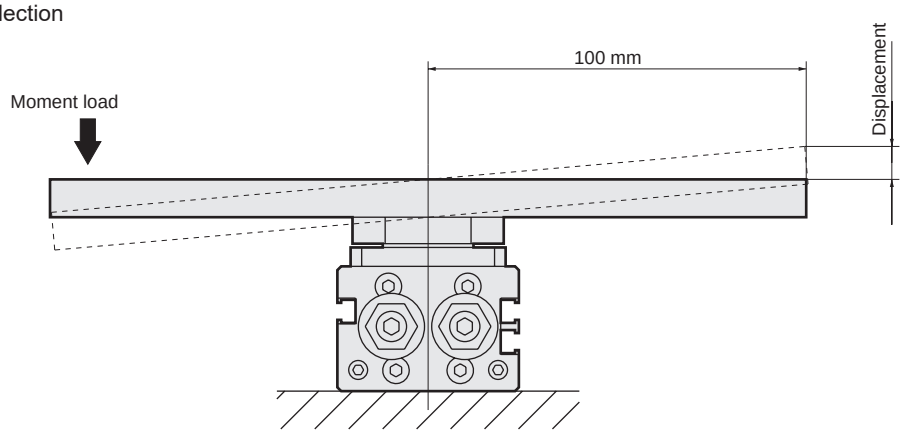

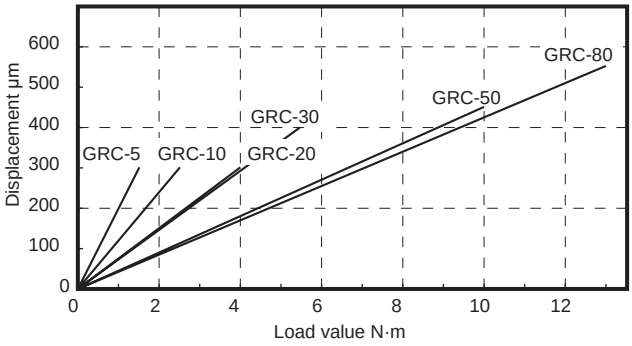

Table deflection of GRC (basic)

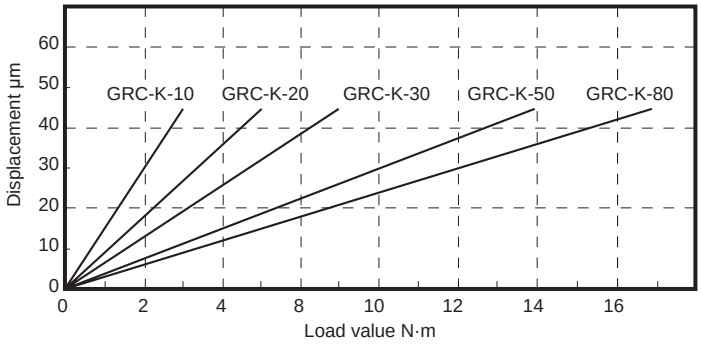

Table deflection of GRC-K (high accuracy)

4. Effective torque diagram

Note that the torque at the oscillation end is half of the value in the following graph.

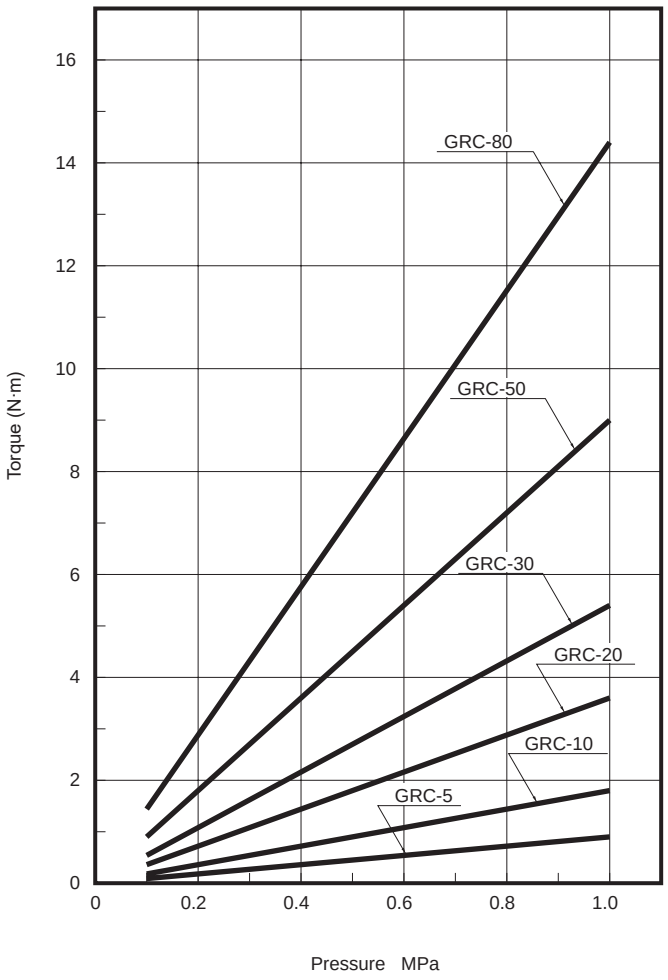

5. Oscillating angle adjustment method

● Basic high accuracy

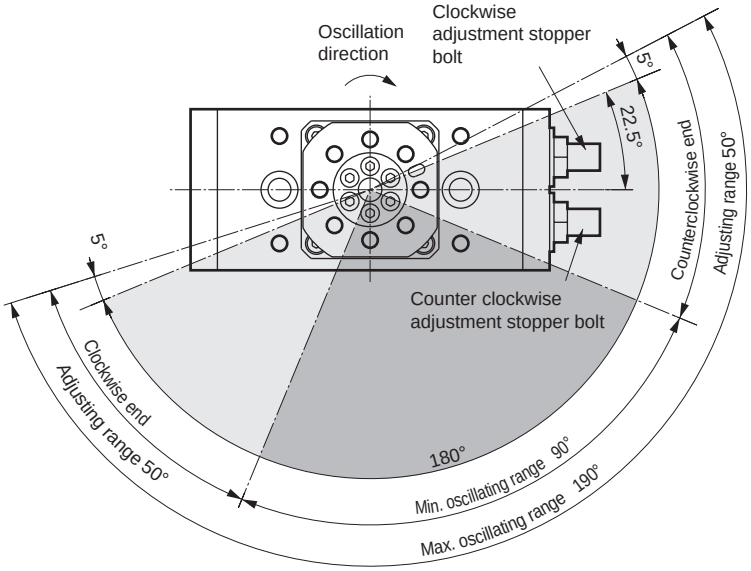

180° specifications

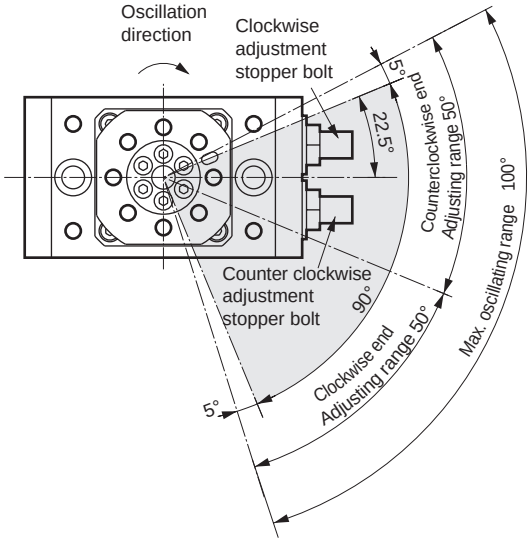

90° specifications

Pneumatic components

Safety Precautions

Be sure to read this section before use.
Refer to page 2 for general information of the cylinder, and to page 320 for general information of the cylinder switch.

Rotary actuator GRC Series

Design & selection

1. Common

CAUTION

■ Generally, select a model so that the output torque exceeds twice the torque required by the load.
The GRC Series uses a double piston, so if the oscillation angle is adjusted by the stopper bolt, torque at the oscillation end will be half the effective torque.

■ Even if the torque required by the load for the oscillation is small, the inertia of the load may break the actuator. Upon consideration of moment of inertia, kinetic energy and oscillating time, be sure to use with the allowable energy or less.

2. Fine speed GRC-F

CAUTION

■ Use without lubrication. (Lubrication not possible)
Applying lubrication may cause changes in characteristics.

■ Assemble the speed control valve near the rotary actuator.
When installed at a distant place from the rotary actuator, the adjustment becomes unstable.
Use SC-M3/M5, SC3W, SCD-M3/M5, or SC3U Series speed control valve.

■ At the higher air pressure and the lower load factor, the speed generally becomes more stable.
The load factor should be 50% or less.

■ Stable speed control is achieved with a meter-out circuit.

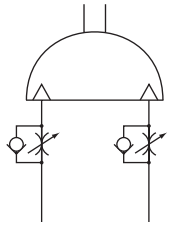

PUSH: Meter-out
PULL : Meter-out

■ Avoid use in places subject to vibrations.
The product will be adversely affected by vibration and operation will be unstable.

Mounting, installation & adjustment

1. Common

CAUTION

■ Do not apply additional processing to the product.
If modified, the product's strength will decrease, possibly causing product damage. This may result in injury or damage to operator, components, or equipment.

■ Do not widen the fixed orifice on the piping port by re-machining, etc. If the fixed orifice is widened, the actuator operation speed and impact will increase, damaging the actuator. Moreover, be sure to attach a speed controller during piping before use.

■ Select among 3 surfaces for piping port. Ports other than the side piping port are plugged when the product is shipped. When changing the piping port, interchange these plugs. When changing ports for the GRC-5 to 30, apply the recommended adhesive to plugs. When changing ports for GRC- 50 or 80, apply recommended adhesive or wrap sealing tape around plugs. Failure to do so may lead to air leakage.
[Recommended threadlocker]
LOCTITE 222 [Locktite Japan Corp.]
Three Bond 1344 [Three Bond Corp.]

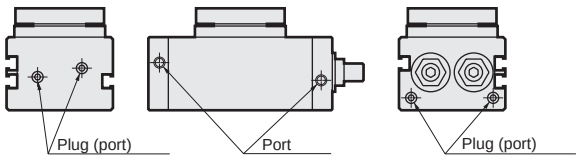

■ The relationship of piping ports and oscillation direction is shown below.

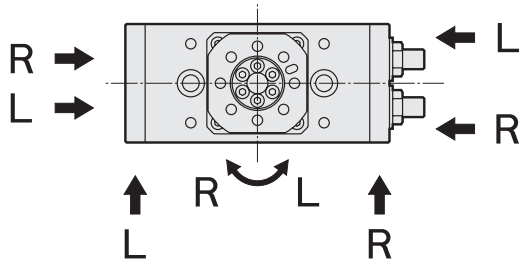

R : Clockwise rotation
L : Counter-clockwise rotation

■ An angle adjustment screw (stopper bolt or shock absorber) for adjustment of the oscillating angle is provided as standard equipment. When the product is shipped, the angle adjustment screw is adjusted randomly within the oscillation adjusting range. Readjust this to the required angle before use.

■ Adjust the angle to within the adjustment range specified for the product.
If adjusted beyond the adjusting range, the product may be damaged. Refer to "Product specifications" (page 286) and "Oscillation angle adjustment" (page 304).

■ The adjustment angle per rotation of the angle adjusting screw (stopper bolt) is shown below.

Basic high accuracy

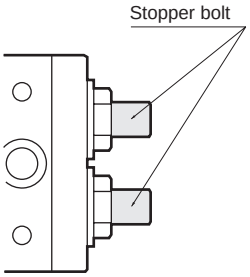

Table 1

Size	Stopper bolt adjustment angle per rotation	Shock absorber adjustment angle per rotation
5	8.7°	1.1°
10	4.9°	1.0°
20	5.7°	1.1°
30	3.8°	0.9°
50	3.5°	0.7°
80	3.5°	0.9°

■ Observe steps (1) to (5) when adjusting the angle. If adjustments are not made this way, the seal washer will be damaged after one or two adjustments.

[How to adjust the angle]

(1) First loosen the hexagon nut as shown in Fig.1.

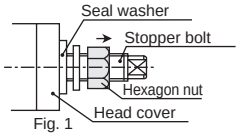

Fig. 1

(2) Next, remove the seal washer from the head cover by hand as shown in Fig. 2.

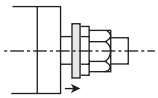
Fig. 2

(3) Turn the stopper bolt, hexagon nut, and seal washer together as shown in Fig. 3, and adjust the angle. Make sure that the rubber section of the seal washer does not get caught in the thread.

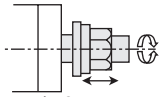
Fig. 3

(4) After adjusting the angle, move the seal washer closer to the head cover by hand as shown in Fig. 4.

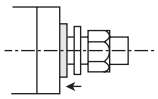
Fig. 4

(5) Tighten the lock nut as shown in Fig. 5. Make sure that the rubber section of the seal washer does not get caught in the thread.

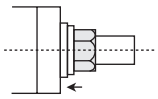
Fig. 5

After adjusting the angle, securely tighten the hexagon nut up to the tightening torque in Table 2. Be sure to tighten the nut up to the specified torque. Otherwise, it will become loose leading to external leak.

Table 2

Size	Tightening torque (N·m)
5	5.9 ±10%
10	9.4 ±10%
20	11.8 ±10%
30	11.8 ±10%
50	22.1 ±10%
80	22.1 ±10%

■ When you replace the seal washer which seals the angle adjusting stopper bolt, be sure to tighten the hexagon nut up to the tightening torque specified in the Table 2. Failure to do so may lead to air leakage.

Basic high accuracy

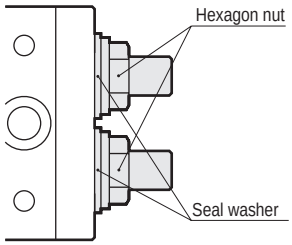

■ A rubber cushion is placed inside GRC. (Basic and High accuracy) If less than 0.3 MPa of pressure is used, the rubber cushion may not function correctly. If oscillating end accuracy is required, use at pressure of 0.3 MPa or higher.
Back pressure may remain if using with all ports closed, potentially failing to push fully against the rubber cushion.

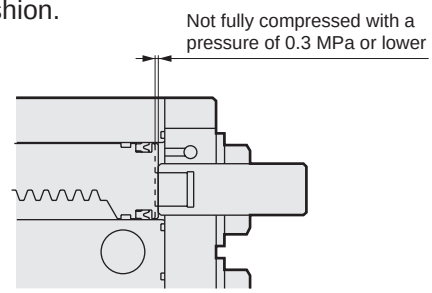

■ Pay attention to the proximity of cylinders, etc.
When installing two or more rotary actuators with switches in parallel, or if there is a magnetic substance such as a steel plate nearby, provide the following distances from the cylinder body surface. (The dimensions are the same for all sizes.)
Mutual magnetic interference may cause the switch to malfunction.

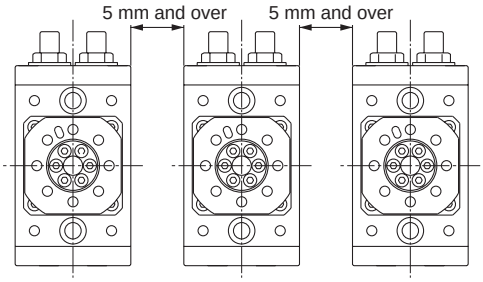

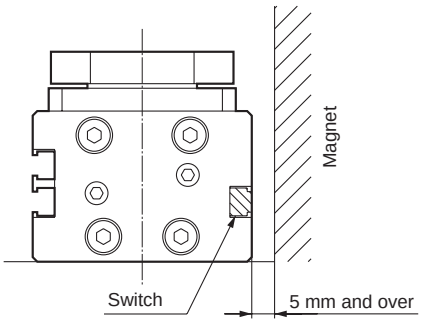

SCPD3
SCM
SSD2
MDC2
SMG
LCM
LCR
LCG
LCX
STM
STG
STR2
MRL2
GRC
Cylinder switch
MN3E MN4E
4GA/B
M4GA/B
MN4GA/B
F.R (module unit)
Clean F.R
Precision R
Press gauge Diff. press gauge
Electro-pneumatic R
Speed controller
Auxiliary valve
Fitting/ tube
Clean air unit
Pressure sensor
Flow rate sensor
Valve for air blow
Ending

⚠ CAUTION

■ As compatible fittings for the relief port are limited, refer to the table below to select the fitting.

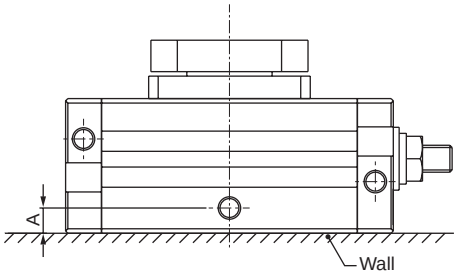

GRC-5, 10

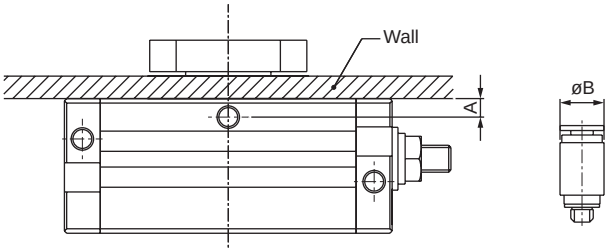

GRC-20 to 80

Descriptions / Model No.	Port size	Port location dimensions A	When there is a wall: Applicable fittings	When there is a wall: Fitting O.D. øB	When there is a wall: Inapplicable fittings	When there is no wall and a 2-color switch is used: Applicable fittings	When there is no wall and a 2-color switch is used: Fitting O.D. øB	When there is no wall and a 2-color switch is used: Inapplicable fittings
GRC-5	M5 depth 4	4.1	GWS3-M5-S-P7* GWS4-M5-S-P7* FTS4-M5-P80 FTS6-M5-P80	ø8.2 or smaller	GWS6-M5-S GWS*-M5	GWS3-M5-S-P7* GWS4-M5-S-P7* FTS4-M5-P80 FTS6-M5-P80	ø9 or smaller	GWS6-M5-S GWS*-M5
GRC-10	M5 depth 3.5	4.1	GWS3-M5-S-P7* GWS4-M5-S-P7* FTS4-M5-P80 FTS6-M5-P80	ø8.2 or smaller	GWS6-M5-S GWS*-M5	GWS3-M5-S-P7* GWS4-M5-S-P7* GWS6-M5-S-P7* GWS4-M5-P7* FTS4-M5-P80 FTS6-M5-P80	ø10 or smaller	GWS6-M5
GRC-20	M5 depth 4	5.8	GWS3-M5-S-P7* GWS4-M5-S-P7* GWS6-M5-S-P7* GWS4-M5-P7* FTS4-M5-P80 FTS6-M5-P80	ø11.6 or smaller	GWS6-M5	GWS3-M5-S-P7* GWS4-M5-S-P7* GWS6-M5-S-P7* GWS4-M5-P7* FTS4-M5-P80 FTS6-M5-P80	ø11.6 or smaller	GWS6-M5
GRC-30	M5 depth 4	6.2	GWS3-M5-S-P7* GWS4-M5-S-P7* GWS6-M5-S-P7* GWS4-M5-P7* FTS4-M5-P80 FTS6-M5-P80	ø12.4 or smaller (ø10.4 or smaller)	GWS6-M5	GWS3-M5-S-P7* GWS4-M5-S-P7* GWS6-M5-S-P7* GWS4-M5-P7* FTS4-M5-P80 FTS6-M5-P80	ø10.4 or smaller	GWS6-M5
GRC-50	M5 depth 4	6.5	GWS3-M5-S-P7* GWS4-M5-S-P7* GWS6-M5-S-P7* GWS4-M5-P7* GWS6-M5-P7* FTS4-M5-P80 FTS6-M5-P80	ø17 or smaller (ø13.8 or smaller)		GWS3-M5-S-P7* GWS4-M5-S-P7* GWS6-M5-S-P7* GWS4-M5-P7* GWS6-M5-P7* FTS4-M5-P80 FTS6-M5-P80	ø13.8 or smaller	
GRC-80	M5 depth 4	12.9	GWS3-M5-S-P7* GWS4-M5-S-P7* GWS6-M5-S-P7* GWS4-M5-P7* GWS6-M5-P7* FTS4-M5-P80 FTS6-M5-P80	ø25.8 or smaller (ø14 or smaller)		GWS3-M5-S-P7* GWS4-M5-S-P7* GWS6-M5-S-P7* GWS4-M5-P7* GWS6-M5-P7* FTS4-M5-P80 FTS6-M5-P80	ø14 or smaller	

* The fitting O.D. in parenthesis ( ) is for the case when a 2-color switch is used.
* There is no specific restriction when there is no wall and a 1-color switch is used.
* Joints Refer to page 946 of this catalog.
For FTS4 and FTS6, copper-based materials are used.

Cylinder switch guide

Axial lead wire (H) direction and radial lead wire (V) direction are available.

About model No. of single switch unit

The model No. of single switch unit is as below.

SW - Switch model No.

CONTENTS

● **T Series** **310**
● **K Series** **314**
● **F Series** **318**
⚠ Safety precautions 320

SCPD3
SCM
SSD2
MDC2
SMG
LCM
LCR
LCG
LCX
STM
STG
STR2
MRL2
GRC
Cylinder switch
MN3E MN4E
4GA/B
M4GA/B
MN4GA/B
F.R (module unit)
Clean F.R
Precision R
Press gauge Diff. press gauge
Electro-pneumatic R
Speed controller
Auxiliary valve
Fitting/ tube
Clean air unit
Pressure sensor
Flow rate sensor
Valve for air blow
Ending

T Series	1-color/2-color display	Applicable cylinder	SCPD3/SCM/SSD2/STM/STG/MRL2/LCR/LCG/LCX/GRC

CE (except for T1 and T8)

T*H/T*WH

T*V/T*WV

T1H

T1V

T8H/T*YH
T2JH

T8V/T*YV
T2JV

Specifications

Descriptions	Proximity 2-wire						Proximity 3-wire			
	T1H/T1V	T2H/T2V	T2HR3/T2VR3 (With Bend tolerant lead wire)	T2JH/T2JV (Off-delay)	T2YH/T2YV (2-color-display)	T2WH/T2WV (2-color display)	T3H/T3V	T3PH/T3PV (PNP output)	T3YH/T3YV (2-color display)	T3WH/T3WV (2-color display)
Applications	Programmable controller, relay, small solenoid valve	Programmable controller					Programmable controller, relay			
Output method	-						NPN output	PNP output	NPN output	NPN output
Power supply voltage	-						10 to 28 VDC			
Load voltage	85 to 265 VAC	10 to 30 VDC				24 VDC ±10%	30 VDC or less			
Load current	5 to 100 mA	5 to 20 mA (*1)					100 mA or less		50 mA or less	
Current consumption	-	-					10 mA or less at 24 VDC	12 mA or less at 24 VDC	10 mA or less at 24 VDC	
Internal voltage drop	10% or less of load voltage	4 V or less					0.5 V or less			
Off delay time	-			200 ±50 ms	-		-			
Indicator lamp	Red LED (Lit when ON)				Red/green LED (Lit when ON)	Red/green LED (Lit when ON)	Red LED (Lit when ON)	Yellow LED (Lit when ON)	Red/green LED (Lit when ON)	
Leakage current	1 mA or less with 100 VAC 2 mA or less with 200 VAC	1 mA or less					10 μA or less			
Lead wire length *6	1 m (oil resistant vinyl cabtyre cable 2-conductor 0.3 mm^2)	1 m (oil resistant vinyl cabtyre cable 2-conductor 0.2 mm^2)	3 m (bend-resistant, oil resistant vinyl cabtire cable 2-conductor 0.2 mm^2)	1 m (oil resistant vinyl cabtyre cable 2-conductor 0.3 mm^2)		1 m (oil resistant vinyl cabtyre cable 2-conductor 0.2 mm^2)	1 m (oil resistant vinyl cabtyre cable 3-conductor 0.2 mm^2)		1 m (oil resistant vinyl cabtyre cable 3-conductor 0.3 mm^2)	1 m (oil resistant vinyl cabtyre cable 3-conductor 0.2 mm^2)
Max. shock resistance	980 m/s^2									
Insulation resistance	100 MΩ and over with 500 VDC megger	20 MΩ and over with 500 VDC megger		100 MΩ and over with 500 VDC megger		20 MΩ and over with 500 VDC megger	20 MΩ and over with 500 VDC megger		100 MΩ and over with 500 VDC megger	20 MΩ and over with 500 VDC megger
Withstand voltage	No abnormality after application of 1500 VAC for 1 minute.	No abnormality after application of 1000 VAC for 1 minute.								
Ambient temperature	-10 to +60°C									
Degree of protection	IEC Standards IP67, JIS C0920 (waterproof)									
Weight	1 m: 33 g 3 m: 87 g 5 m: 142 g	1 m: 18 g 3 m: 49 g 5 m: 80 g		1 m: 33 g 3 m: 87 g 5 m: 142 g		1 m: 18 g 3 m: 49 g 5 m: 80 g	1 m: 18 g 3 m: 49 g 5 m: 80 g		1 m: 33 g 3 m: 87 g 5 m: 142g	1 m: 18 g 3 m: 49 g 5 m: 80g

Descriptions	Reed 2 wire						
	T0H/T0V		T5H/T5V		T8H/T8V		
Applications	Programmable controller, relay		Programmable controller, relay IC circuit (without indicator lamp), serial connection		Programmable controller, relay		
Power supply voltage	-						
Load voltage	12/24 VDC	110 VAC	5/12/24 VDC	110 VAC	12/24 VDC	110 VAC	220 VAC
Load current	5 to 50 mA	7 to 20 mA	50 mA or less	20 mA or less	5 to 50 mA	7 to 20 mA	7 to 10 mA
Current consumption	-						
Internal voltage drop	3 V or less		0.1 V or less (*6)		4 V or less		
Indicator lamp	Red LED (Lit when ON)		Without indicator lamp		Red LED (Lit when ON)		
Leakage current	0 mA						
Lead wire length	1 m (oil resistant vinyl cabtyre cable 2-conductor 0.2 mm^2)				1 m (oil resistant vinyl cabtyre cable 2-conductor 0.3 mm^2)		
Max. shock resistance	294 m/s^2						
Insulation resistance	20 MΩ and over with 500 VDC megger				100 MΩ and over with 500 VDC megger		
Withstand voltage	No abnormality after application of 1000 VAC for 1 minute.				No abnormality after application of 1500 VAC for 1 minute.		
Ambient temperature	-10 to +60°C						
Degree of protection	IEC Standards IP67, JIS C0920 (waterproof)						
Contact protection circuit	No				Yes		
Weight	1 m: 18 g 3 m: 49 g 5 m: 80 g				1 m: 33 g 3 m: 87 g 5 m: 142 g		

*1: The maximum load current of 20 mA is for 25°C. The current will be lower than 20 mA when operating ambient temperature around the switch is higher than 25˚C. (5 to 10 mA at 60°C)
*2: T2HR3, T2VR3, T3PH and T3PV switches are available as custom order when installed onto applicable cylinders.
*3: T2JH and T2JV switches are available as custom order when installed onto MRL2 or LCR cylinders.
*4: Some cylinders accept only certain types of switches. Refer to each cylinder page for the details.
*5: Contact CKD for cylinder switches with a connector.
*6: Internal resistance of 0.5 Ω or less
*7: For details of the contact protections measures, refer to page 320.

T Series	AC magnetic field	Applicable cylinder	STG/SSD2/SCM

T2YD

Specifications

Descriptions	Proximity 2-wire		
	T2YD	T2YDT	T2YDU (custom order)
Applications	Programmable controller		
Indicator lamp	Red/green LED (Lit when ON)		
Load voltage	24 VDC ±10%		
Load current	5 to 20 mA		
Internal voltage drop	6 V or less		
Leakage current	1.0 mA or less		
Output delay time *1 (Delay ON, delay OFF)	60 ms or less		
Lead wire length	1 m (oil resistant vinyl cabtyre cable ø6, 0.5 mm^2 × 2-conductor) *2	1 m (flame-resistant cabtire cable ø6, 0.5 mm^2 × 2-conductor) *2	0.3 m (flame-resistant vinyl cabtire cable with M12 cable connector, AWG20, 2-conductor)
Insulation resistance	100 MΩ and over with 500 VDC megger		
Withstand voltage	No failure impressed at 1000 VAC for 1 minute		
Max. shock resistance	980 m/s^2		
Ambient temperature	-10 to +60°C		
Degree of protection	JIS C0920 (waterproof), IEC standards IP67		
Weight	1 m: 61 g 3 m: 166 g 5 m: 272 g		35 g

*1: The time taken after detecting magnet until signal output.
*2: 3 m and 5 m lead wires are available as options.
3: As the switch for AC magnetic field (T2YD) is for spot welding machine, it cannot be used with arc welding machine (DC).
*4: Contact CKD for cylinder switches with a connector.

SCPD3
SCM
SSD2
MDC2
SMG
LCM
LCR
LCG
LCX
STM
STG
STR2
MRL2
GRC
Cylinder switch
MN3E MN4E
4GA/B
M4GA/B
MN4GA/B
F.R (module unit)
Clean F.R
Precision R
Press gauge Diff. press gauge
Electro-pneumatic R
Speed controller
Auxiliary valve
Fitting/ tube
Clean air unit
Pressure sensor
Flow rate sensor
Valve for air blow
Ending

Dimensions

● T*H/T*WH Series
(lead wire straight)

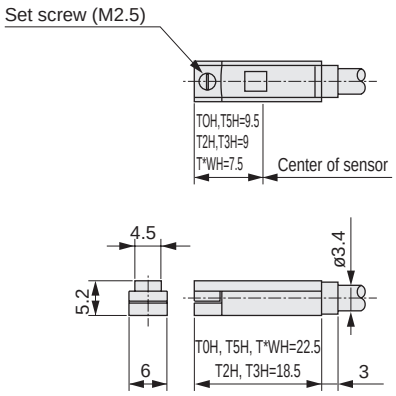

● T*YH/T2JH/T8H Series
(lead wire straight)

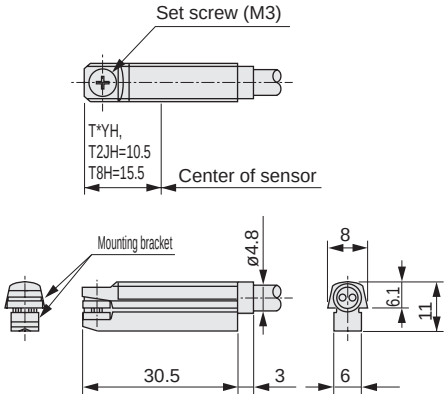

● T1H Series
(lead wire straight)

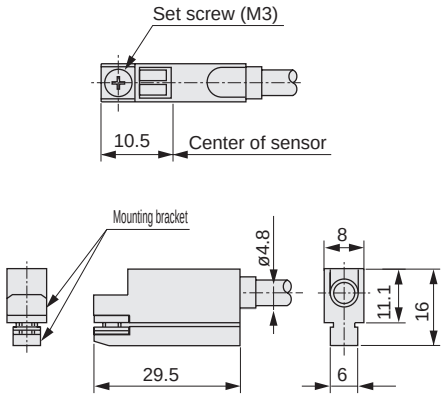

● T*V/T*WV Series
(lead wire L-shaped)

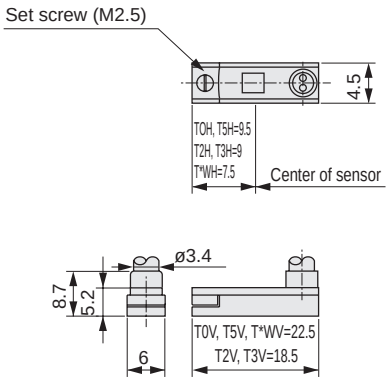

● T*YV/T2JV/T8V Series
(lead wire L-shaped)

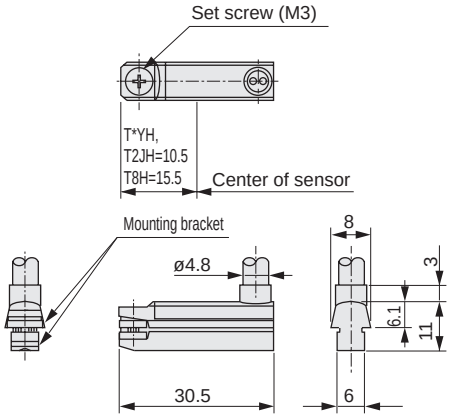

● T1V Series
(lead wire L-shaped)

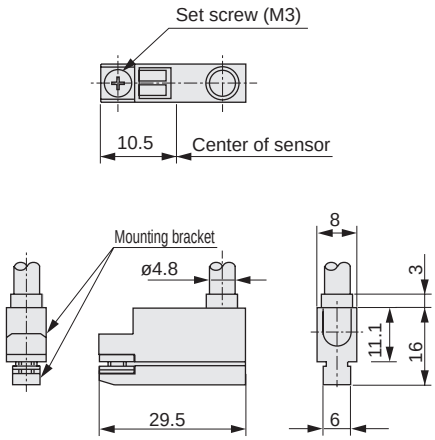

● T2YD (switch for AC magnetic field)

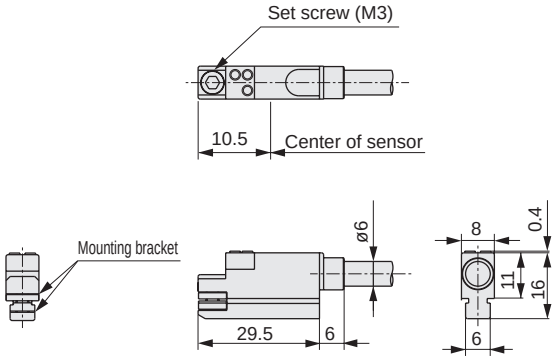

● T2YDU (switch for AC magnetic field with M12 cable connector provided)

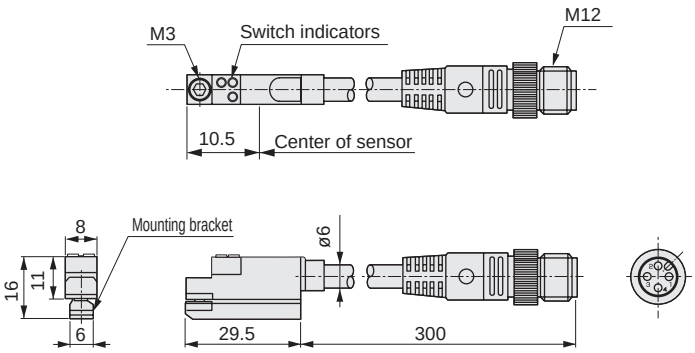

Switch internal circuit diagram

● T1H/T1V

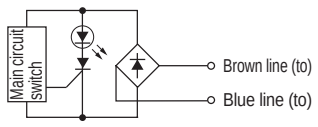

● T2H/T2V/T2YH/T2YV/T2WH/T2WV/T2JH/T2JV

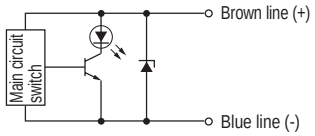

● T3H/T3V/T3YH/T3YV/T3WH/T3WV

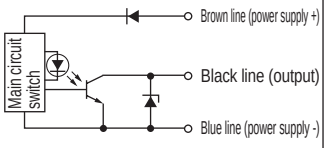

● T3PH/T3PV

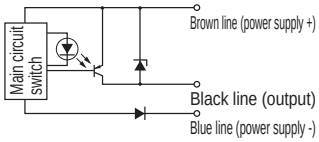

● T0H/T0V

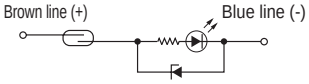

● T5H/T5V

● T8H/T8V

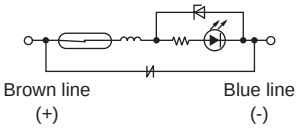

● T2YD/T2YDT

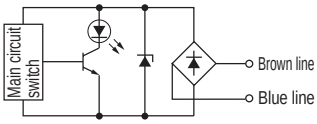

This switch is not polarized.

SCPD3
SCM
SSD2
MDC2
SMG
LCM
LCR
LCG
LCX
STM
STG
STR2
MRL2
GRC
Cylinder switch
MN3E MN4E
4GA/B
M4GA/B
MN4GA/B
F.R (module unit)
Clean F.R
Precision R
Press gauge Diff. press gauge
Electro-pneumatic R
Speed controller
Auxiliary valve
Fitting/ tube
Clean air unit
Pressure sensor
Flow rate sensor
Valve for air blow
Ending

K Series	1-color/2-color display	Applicable cylinder	SMG/STR2

K*H
K3PH

K*V
K3PV

K*YH

K*YV

Specifications

Descriptions	Proximity 2-wire		Proximity 3-wire		
	K2H/K2V	K2YH/K2YV	K3H/V (NPN output)	K3PH/V (PNP output)	K3YH/V (2-color display)
Applications	Programmable controller		Programmable controller, relay		
Output method	-		NPN output	PNP output	NPN output
Power supply voltage	-		10 to 28 VDC		
Load voltage	10 to 30 VDC		30 VDC or less		
Load current	5 to 20 mA (*1)		50 mA or less		
Current consumption	-		10 mA or less at 24 VDC	12 mA or less at 24 VDC	10 mA or less at 24 VDC
Internal voltage drop	4 V or less		0.5 V or less		
Indicator lamp	Red LED (Lit when ON)	Red/green LED (Lit when ON)	Red LED (Lit when ON)	Yellow LED (Lit when ON)	Red/green LED (Lit when ON)
Leakage current	1 mA or less		10 μA or less		
Lead wire length	1 m (oil resistant vinyl cabtyre cable 2-conductor 0.2 mm^2)	1 m (oil resistant vinyl cabtyre cable 2-conductor 0.3 mm^2)	1 m (oil resistant vinyl cabtyre cable 3-conductor 0.2 mm^2)		1 m (oil resistant vinyl cabtyre cable 3-conductor 0.3 mm^2)
Max. shock resistance	980 m/s^2				
Insulation resistance	20 MΩ and over with 500 VDC megger	100 MΩ and over with 500 VDC megger	20 MΩ and over with 500 VDC megger		100 MΩ and over with 500 VDC megger
Withstand voltage	No abnormality after application of 1000 VAC for 1 minute.				
Ambient temperature	-10 to +60°C				
Degree of protection	IEC Standards IP67, JIS C0920 (waterproof)				
Weight	1 m: 18 g 3 m: 49 g 5 m: 80 g	1 m: 31 g 3 m: 85 g 5 m: 139 g	1 m: 18 g 3 m: 49 g 5 m: 80 g		1 m: 31 g 3 m: 85 g 5 m: 142 g

Descriptions	Reed 2-wire			
	K0H/K0V		K5H/K5V	
Applications	Programmable controller, relay		Programmable controller, relay IC circuit (without indicator lamp), serial connection	
Power supply voltage	-			
Load voltage	12/24 VDC	110 VAC	5/12/24 VDC	110 VAC
Load current	5 to 50 mA	7 to 20 mA	50 mA or less	20 mA or less
Current consumption	-			
Internal voltage drop	3 V or less		01 V or less (*4)	
Indicator lamp	Red LED (Lit when ON)		-	
Leakage current	0 mA			
Lead wire length	1 m (oil resistant vinyl cabtyre cable 2-conductor 0.2 mm^2)			
Max. shock resistance	294 m/s^2			
Insulation resistance	20 MΩ and over with 500 VDC megger			
Withstand voltage	No abnormality after application of 1000 VAC for 1 minute.			
Ambient temperature	-10 to +60°C			
Degree of protection	IEC Standards IP67, JIS C0920 (waterproof)			
Contact protection circuit *4	No			
Weight	1 m: 18 g 3 m: 49 g 5 m: 80 g			

*1: The maximum load current above is for 25°C. The current will be lower than 20 mA when operating ambient temperature around the switch is higher than 25˚C. (5 to 10 mA at 60°C)
*2: Installation of K3PH, K3PV onto applicable cylinders is a custom order.
*3: Contact CKD for cylinder switches with a connector.
*4: Internal resistance of 0.5 Ω or less
*5: For details of the contact protections measures, refer to page 320.

Dimensions

● K*H Series (straight lead wire)

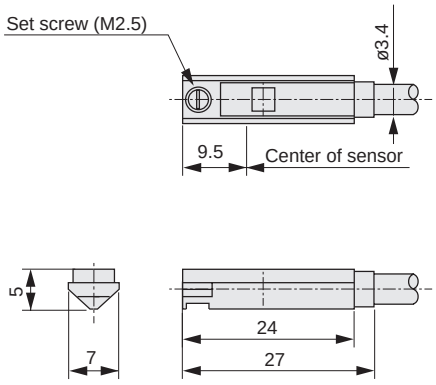

● K*YH Series
(2-color indicator, straight lead wire)

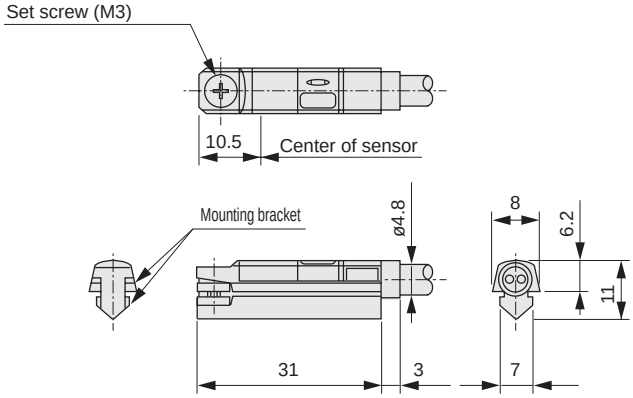

● K*V Series (L-shaped lead wire)

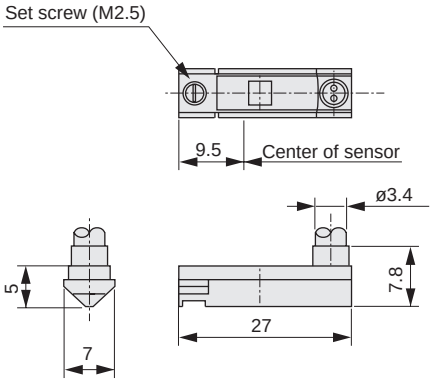

● K*YV Series
(2-color display, L-shaped lead wire)

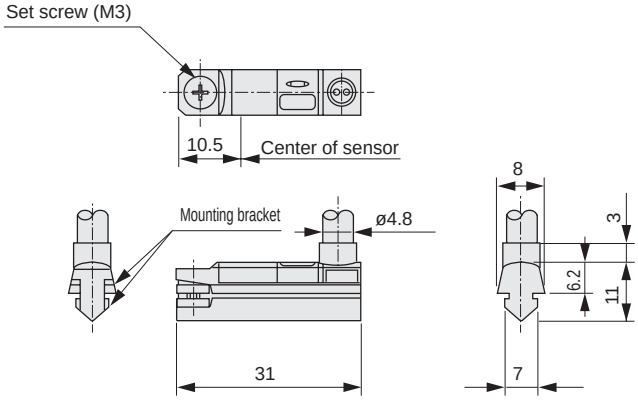

Switch internal circuit diagram

● K2H/K2V/K2YH/K2YV

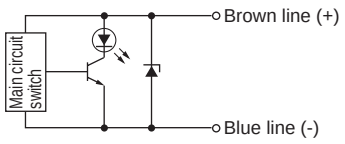

● K3H/K3V/K3YH/K3YV

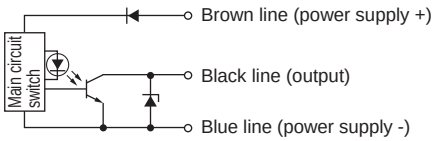

● K3PH/K3PV

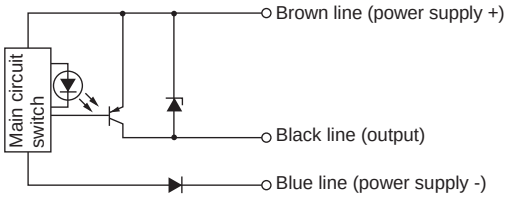

● K0H/K0V

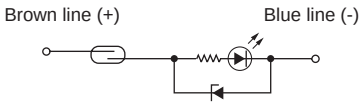

● K5H/K5V

MEMO

SCPD3
SCM
SSD2
MDC2
SMG
LCM
LCR
LCG
LCX
STM
STG
STR2
MRL2
GRC
Cylinder switch
MN3E MN4E
4GA/B
M4GA/B
MN4GA/B
F.R (module unit)
Clean F.R
Precision R
Press gauge Diff. press gauge
Electro-pneumatic R
Speed controller
Auxiliary valve
Fitting/ tube
Clean air unit
Pressure sensor
Flow rate sensor
Valve for air blow
Ending

F Series	Applicable cylinder	MDC2/SSD2/STM/LCR/LCG/LCM

* There are bore sizes which cannot be combined.

F*S

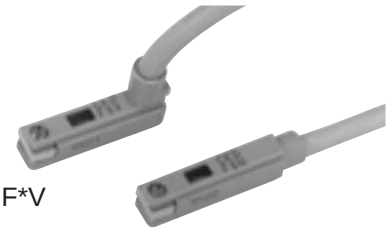

F*V

F*H

F*YV
F3PV

F*YH
F3PV

Specifications

Descriptions	Reed 2-wire	Proximity 2-wire		Proximity 3-wire		Proximity 3-wire
	F0H/V	F2H/V, F2S	F2YH/F2YV	F3H/V, F3S	F3PH/F3PV	F3YH/F3YV
Applications	Programmable controller			Programmable controller, relay		
Output method	-			NPN output	PNP output	NPN output
Power supply voltage	-			10 to 28 VDC	4.5 to 28 VDC	10 to 28 VDC
Load voltage	24 VDC	10 to 30 VDC	24 VDC ±10%	30 VDC or less		
Load current	5 to 20 mA (*1)			50 mA or less		
Current consumption	-			10 mA or less at 24 VDC		
Internal voltage drop	4 V or less			0.5 V or less	0.5 V or less with 30 mA	0.5 V or less
Indicator lamp	Yellow LED (Lit when ON) *3		Red/green LED (Lit when ON)	Yellow LED (Lit when ON) *3		Red/green LED (Lit when ON)
Leakage current	1 mA or less			10 μA or less		
Lead wire length	1 m (bend resistant vinyl cabtyre cable 2-conductor 0.15 mm^2)			1 m (bend resistant vinyl cabtyre cable 3-conductor 0.15 mm^2)		
Max. shock resistance	294 m/s^2	980 m/s^2				
Insulation resistance	20 MΩ and over with 500 VDC megger					
Withstand voltage	No abnormality after application of 1000 VAC for 1 minute.					
Ambient temperature	-10 (14°F) to 60 (140°F)					
Degree of protection	IEC Standards IP67, JIS C0920 (waterproof)					
Contact protection circuit	No	-				
Weight	1 m: 10 g 3 m: 29 g			1 m: 10 g 3 m: 29 g		

*1: The maximum load current of 20 mA is for 25°C. The current will be lower than 20 mA when operating ambient temperature around the switch is higher than 25°C. (5 to 10 mA when 60°C)
*2: With F2S and F3S, if mounting two switches in one groove to enable detection at both ends, mount them so that their set screws face outward.
*3: Indicator lights for F2S and F3S are red.
*4: Installation of F3PH, F3PV onto applicable cylinders is a custom order.
*5: Contact CKD for cylinder switches with a connector.
*6: For details of the contact protections measures, refer to page 320.
*7: The bend resistant lead wire is used.

Dimensions

● F*S Series (lead wire vertical leadout short stroke detection)

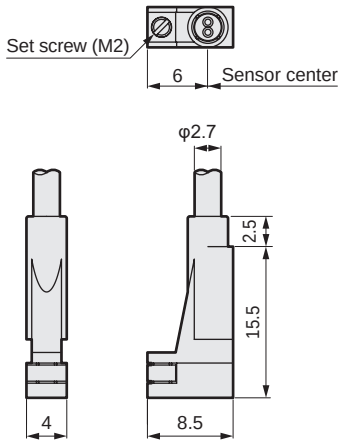

● F*H Series (Straight lead wire)

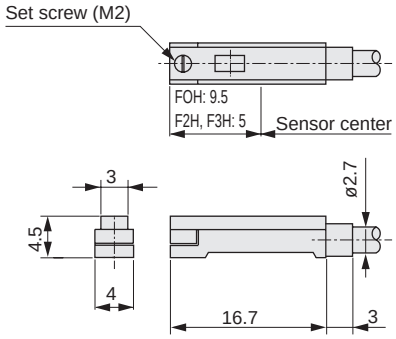

● F*V Series (L-type lead wire)

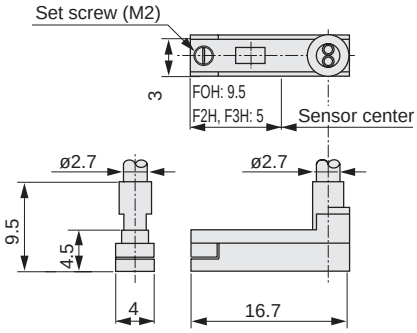

● F*YH/F3PH Series (Straight lead wire)

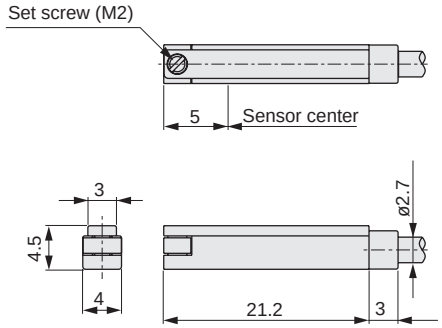

● F*YV/F3PV Series (L-type lead wire)

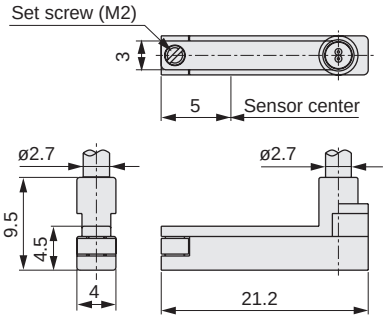

Switch internal circuit diagram

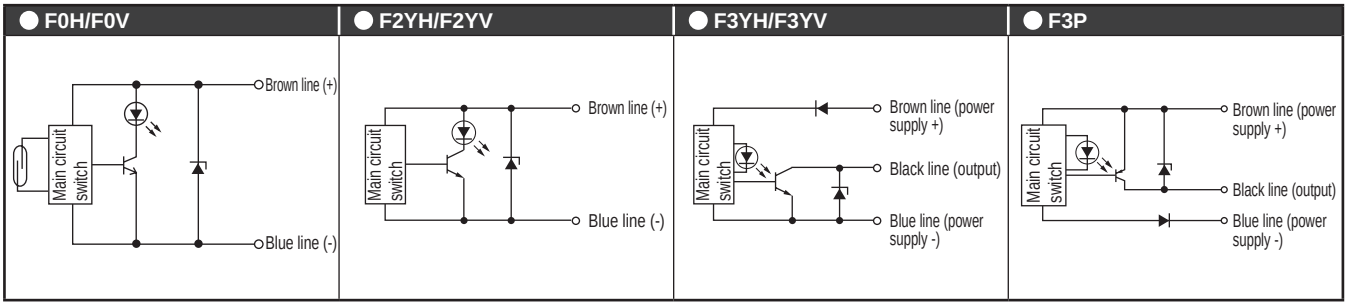

Safety Precautions

Always read this section before use.
Refer to page 2 for general information of the cylinder, and to the body text for detailed precautions of each series.

Cylinder switch

Design & selection

WARNING

■ Application, load current, voltage, temperature, impact, environment, etc., exceeding the specifications will result in damage or operation faults. Use the device as instructed in specifications.

■ Never use this product in an explosive gas atmosphere. The cylinder switch does not have an explosive-proof structure. Never use in an explosive gas atmosphere as explosions or fires could result.

CAUTION

■ Check the following when you use this product for an interlock circuit.
When you use the cylinder switch for an interlock signal which requires high reliability, provide a double interlock mechanism by installing a mechanical protection device or a switch (sensor) in addition to the pressure switch as a guard against failure. Regularly inspect and confirm that the interlock activates correctly.

■ Check the contact capacity.
Do not use a load that exceeds the switch's specified voltage and current. This may lead to failure.

■ Check the contact protection circuit. (Reed switch)

● When an inductive load (relay or solenoid valve) is connected, a surge voltage is generated when the switch is turned OFF. Be sure to provide a contact protection circuit.

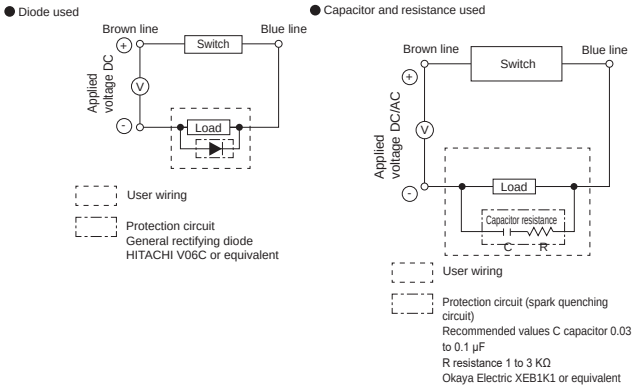

● When a capacitive load (capacitor) is connected, a rush current is generated when the switch is turned ON. Be sure to provide the contact protection circuit.

● When wiring becomes long, a rush current is generated when the switch is turned ON because of its wiring capacity, resulting in breakage or shortened service life of the switch. Be sure to provide a contact protection circuit when the wiring length exceeds the values in Table 1. When using T8 at 200 VAC, make sure that the allowable wire length is shorter than others. Consult CKD for details.

Switch	Voltage	Wire length
T, K, F	DC	50 m
T, K	AC	10 m

Table 1

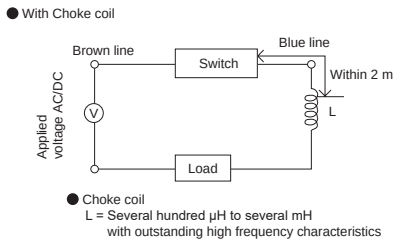

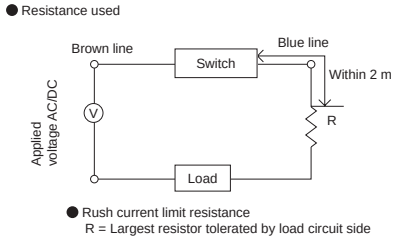

■ Avoid using in an environment exposed to water.

● Insulation failure may cause malfunction.

■ Avoid using this product in environments where oil or chemical mist is present.

● The cylinder switch could be adversely affected (insulation fault, malfunction caused by swelling of filled plastic, hardening of lead wire sheath, etc.) if used in an environment where oil, coolant, or cleaning fluid is used. Contact CKD.

● Cutting oil proof cylinder switches are available. Refer to "Guide to pneumatic devices compatible with cutting oil" (No. CC-N-375) for details.

■ Do not use in a high impact environment.
If a significant impact (294 m/s^2 or greater) applies to a reed switch, the contacts may instantaneously (1 ms or less) close or open erroneously. It may be necessary to use a proximity switch depending on the working environment. Consult with CKD.

■ Do not use this product in surge generating areas.

If there are devices and components (solenoid lifters, high frequency induction furnace, motors, etc.) around the cylinder with proximity switch that generate a large surge, consider surge protection of the source as it may lead to deterioration or damage of the switch internal circuit element.

■ Check for any magnets in the vicinity.

If magnetic objects (materials attracted to a magnet) exist in the close vicinity of the cylinder with a cylinder switch, the magnetic force in the cylinder is lost, leading to a cylinder switch failure.

⚠ CAUTION

■ Take note of the distance between cylinders.

- When installing more than one cylinder with switches in parallel, keep sufficient distance between the cylinder tubes according to the cylinder specifications.
  Mutual magnetic interference may cause the switch to malfunction.

■ Check the magnetic environment.

- If a strong magnetic field exists around it, use a svwitch for AC magnetic field. (T2YD)
  If a magnet moves around in the vicinity of the cylinder, they may interfere with each other affecting the detection accuracy.

■ In the mid-stroke position, pay attention to the ON time of the cylinder switch.

- When setting the cylinder switch at mid-stroke and driving a load with the piston movement, if the speed is too fast, the cylinder switch will function but operation time will be too short and the load may not respond correctly.
  The maximum detectable piston speed will be:

$$V\ (\text{mm/s}) = \frac{\text{Cylinder switch operation range (mm)}}{\text{Load operation time (s)}}$$

If the piston speed is too fast, use an off delay output cylinder switch T2JH/V (models are limited).

■ Pay attention to the serial connection usage method.

- When serially connecting several 2-wire switches, the switch voltage drop is the total voltage drop of all connected switches. The voltage applied to the load is the voltage obtained by subtracting the voltage drop at switches from the power supply voltage. Check load specifications and determine the number of switches.
- Connecting several 2-wire proximity switches in series may result in a malfunction. Contact CKD in advance. It is recommended to use reed switches.
- When connecting several 3-wire serial proximity switches, the switch voltage drop is the total voltage drop of all connected switches, as with the 2-wire switch. In addition, the current flowing to the switch is the sum of current consumption and load current of the switches connected as in the upper right figure. Check load specifications and determine the number of connections so as not to exceed the maximum load current of the switch.
- The indicator lamp turns ON only when all switches are ON.

Fig. 1: For T3 (Y), K3 (Y) and F3 (Y)

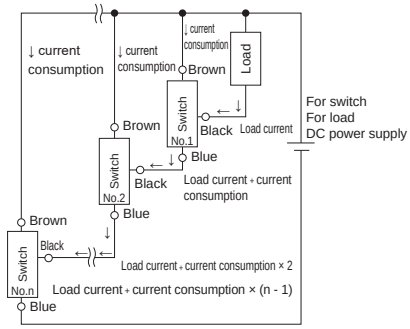

For T3P, K3P and F3P

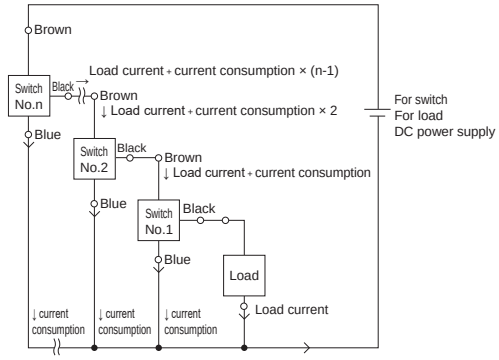

■ Pay attention to the parallel connection usage method.

- When connecting several 2-wire switches in parallel, note that leakage current increases in proportion to the number of connected units. Check load specifications and determine the number of connections.
- With the 2-wire proximity switch, when 1 switch changes from ON to OFF status, voltage at both ends of the switch connected in parallel drops to the internal voltage drop value when the switch is ON and goes below the load voltage range, so other switches will not turn ON. Therefore, check the input specifications of the programmable controller that is the connected load before use.
- Since the leakage current value of the 3-wire proximity switch is very small (10 μA or less), it should not be a problem for normal use.
- Note that switch' indicator lamp could dim or may not turn ON.

■ Output circuit protection (Proximity switch)

● When an inductive load (relay or solenoid valve) is connected, a surge voltage is generated when the switch is turned OFF. Be sure to provide the following protection circuit.

T3 (Y), K3 (Y), F3 (Y)

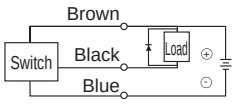

● Diode
D = Made by Hitachi
V06C or equivalent

Example of adding a surge absorption element for inductive load.

● When a capacitive load (capacitor) is connected, a rush current is generated when the switch is turned ON. Be sure to provide the protection circuit shown below in the figure.

T3 (Y), K3 (Y), F3 (Y)

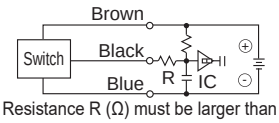

Resistance R (Ω) must be larger than the following equation in this case.

$\frac{V}{0.15}$ = R (Ω) (R3 (Y), M3 (W))

$\frac{V}{0.05}$ = R (Ω) (T3 (Y), K3 (Y), F3 (Y))

● Be sure to provide the following protective circuit when the lead wire length exceeds 10 m.

T2 (Y/J), K2 (Y), F2

● With Choke coil

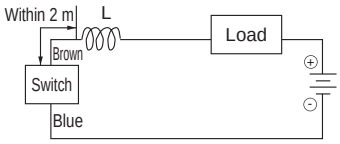

● Choke coil
L = Several hundred μH to several mH
with outstanding high frequency characteristics

● Resistance used

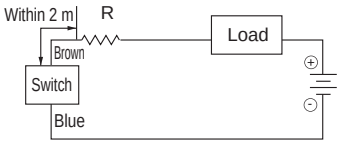

● Rush current limit resistance
R = Largest resistor tolerated by load circuit side

● Resistance used
Within 2 m

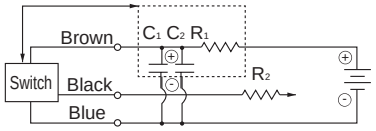

Power supply noise absorptive circuit
C_1 = 20 to 50 μF
Electrolytic capacitor (Withstand voltage: 50 V or greater)
C_2 = 0.01 to 0.1 μF
Ceramic capacitor
Rush current limit resistance
R_1 = 20 to 30 Ω
R_2 = Use the resistor as large as permitted by the load circuit.

■ Check the reed switch for its useful life.

● Useful life of the reed switch may vary depending on use conditions but it is generally about several million times of use. If the machine at your site needs to be put into a day and night operation or a high frequency operation, useful life of the contact will be reached in a short term; therefore using a proximity switch with no contact part is recommended.

⚠ CAUTION

■ Do not drop or apply impact.

Do not drop or bump the switch or apply excessive impact (294 m/s² or greater for reed switches, 980 m/s² or greater for proximity switches) to it. Even if the switch case does not break, switch components may break leading to malfunction.

■ Do not carry the cylinder by the switch's lead wire.

This may cause disconnection of lead wire, but this also applies stress inside the switch, which may break an internal element of the switch.

■ Do not wire together with power lines or high voltage lines.

Avoid the use of parallel wiring or wiring in the same conduit as that of power lines or high voltage lines. Wire separately. The control circuit containing the cylinder switch could malfunction due to noise.

■ Do not short-circuit the load.

If turned ON in a state of load short-circuit, excess current will flow and the switch will be instantly damaged.

■ Pay attention to the lead wire connection.

Turn OFF power to the device in the electric circuit to be connected before starting wiring. If operated while the power is turned ON, it may cause accidents due to electric shock or unpredicted operation.

● Reed switch

Do not connect the switch lead wire directly to the power supply. Connect the load serially. Pay attention to the following (1), (2) for RO, MO, TO, KO, EO, FO, ETO.

(1) When used for DC, connect the brown wire on the positive (+) side and the blue wire on the negative (-) side. The switch will function when connected in reverse, but the indicator lamp will not turn ON. (There is no polarity for HO.)

(2) When connected to an AC relay or programmable controller input, conducting half wave rectification with that circuit may prevent the indicator lamp from turning ON. The indicator lamp will come ON when the switch lead' polarity is reversed.

● Proximity switch

Correctly connected lead wires on the right based on color coding.
Incorrect wiring could result in damage.

● T2 (Y), T2J, K2 (Y) and F2 (Y) (T2YD does not have polarity)

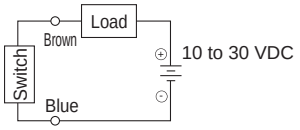

● T3 (Y), K3 (Y), F3 (Y)

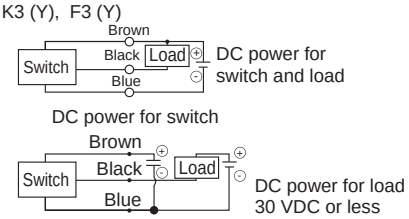

● T3P, K3P, F3P

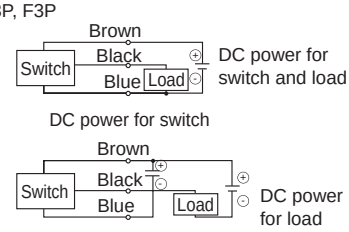

(Connection to programmable controller (PLC))

● Connecting method may vary depending on the type of programmable controller. Refer to the input specifications.

● Connection to source input (external power supply)

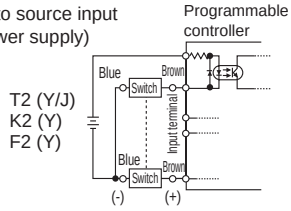

● Connection to source input (internal power supply)

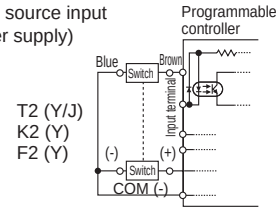

● Connection to sink input

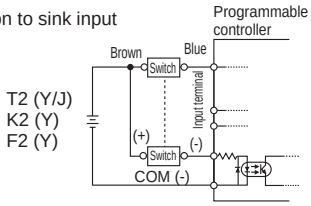

● Connection to source input (external power supply)

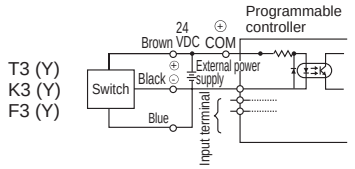

● Connection to source input (internal power supply)

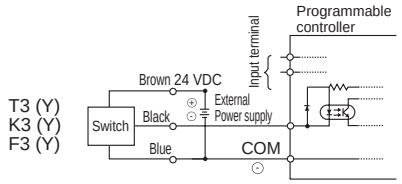

● Example of connection to sink input (external power supply)

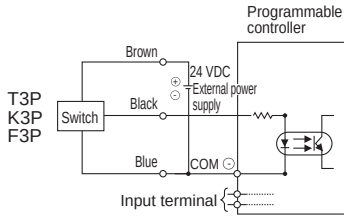

● Example of connection to sink input (internal power supply)

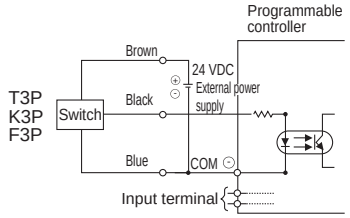

■ Set the switch to the center of the operation range.

The cylinder switch position should be adjusted so that the piston stops at the center of its operating range (the range where the switch is ON). (The mounting position in the catalog indicates the optimum position at the end of the stroke.) If the switch position is adjusted to be at the end of the stroke, the operation may become unstable around the boarder line of ON and OFF.

■ Observe tightening torque when mounting the switch.

If you tighten the bolts exceeding the torque range, the set screw, the bracket, or the switch may be damaged.
On the other hand, if you do not tighten the screw sufficiently, the switch may be displaced.

■ Lead wire protection

The lead wire's minimum bending radius is 9 mm (when fixed). Pay attention to wiring so repeated bending and tensile strain do not apply to the lead wire. For moving part, use T2H/VR cylinder switch (restriction applies to equipped models) with bend tolerant lead wire, which has higher bend tolerance.

■ Relay

Use the following or equivalent relays.

○ Omron model ..... MY
○ Fuji Electric Corporation model..... HH5
○ Tokyo Electric model ..... MPM
○ Panasonic model..... HC

1. Precautions for external force

⚠ CAUTION

■ Especially when using the reed type, the reed switch (glass tube) could be damaged or sensitivity could decrease.
Example: T0□, T5□, T8□ types

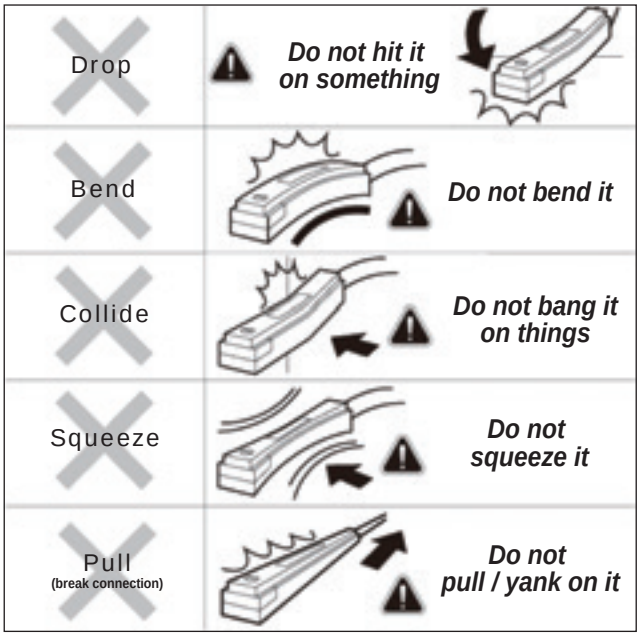

2. Precautions for "Overcurrent/Overvoltage"

■ Do not connect directly to the power supply.

■ Do not connect to the electromagnetic relay without a protection circuit.

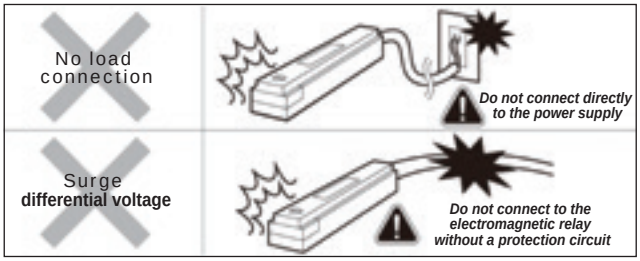

■ Install a "protection circuit" for the electromagnetic relay/long wiring.

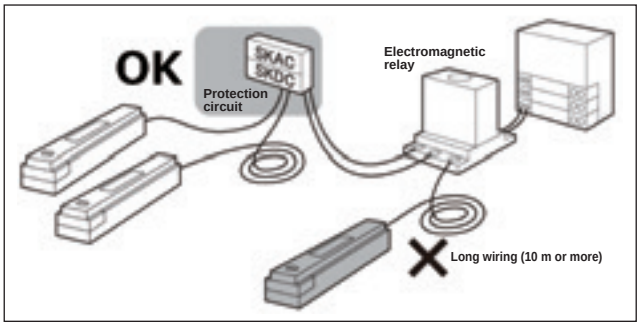

During use & maintenance

⚠ WARNING

■ Do not apply overcurrent.

If overcurrent flows to the cylinder switch because of a load short-circuit, etc., the cylinder switch will be damaged with a risk of ignition.
Provide an overcurrent protection circuit, such as a fuse, for the output wire and power cable as needed.

⚠ CAUTION

■ Pay attention to reverse currents caused by disconnected wires and wiring resistance.

● When other devices, including cylinder switches, are connected to the same power supply as the cylinder switch and the output cable and power cable are short-circuited or the power supply is disconnected to check operation of the input unit in the control panel, reverse current could flow to the cylinder switch's output circuit and cause damage.

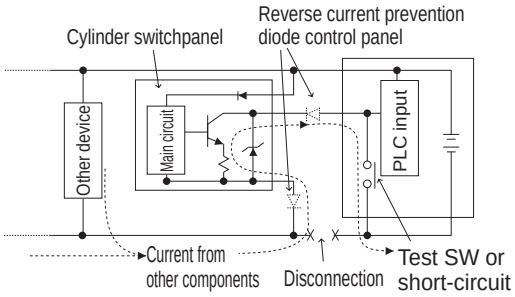

● Take countermeasures as followings to prevent damages caused by reverse current.

(1) Avoid centralizing current at the power cable, especially the negative power cable, and use as thick a cable as possible.
(2) Limit the number of devices connected to the same power supply as the cylinder switch.
(3) Place a diode in series with the cylinder switch's output cable to prevent reverse current.
(4) Place a diode in serial with the cylinder switch's negative power cable to prevent reverse current.

■ Care must be taken for surge current leading.

● When power is shared with inductive loads which create a surge current such as a cylinder switch, a solenoid valve or a relays, a surge current may enter the output circuit and cause damage depending on where the surge absorbing element is placed if the circuit gets closed with inductive loads activated.

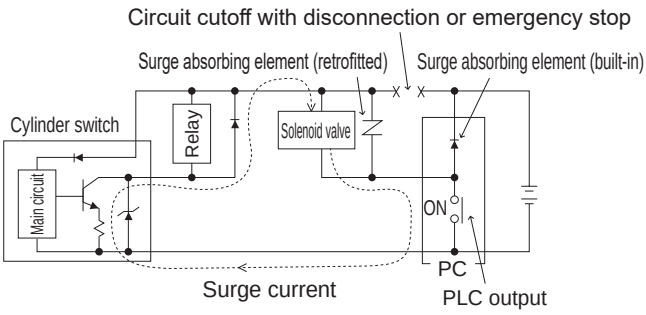

● Take the measures below to prevent damage from sneak surge current.

(1) Separate the power supply for the output system which has inductive load such as a solenoid valve and a relay and for the input system such as a cylinder switch.
(2) If separate power supplies cannot be used, directly install a surge absorption element for all inductive loads. Remember that the surge absorbing element connected to a PLC protects only that device.
(3) Connect a surge absorbing element to the power wiring at the following places as shown below as a measure against disconnections in unspecific areas.

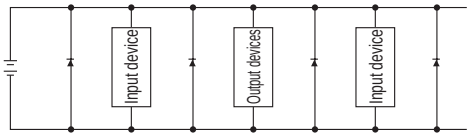

When devices are connected to a connector, the output circuit could be damaged by the above if the connector is disconnected while power is ON. Turn power OFF before connecting or disconnecting the connector.

Directional switching valve

	Page
⚠ Safety precautions	328
3, 4-port pilot operated valve **MN3E0/MN4E0** Series	335
3, 5-port pilot operated valve **4GA/4GB** Series	425

Pneumatic components

Safety Precautions

Be sure to read this section before use.
Refer to this section for detailed precautions for individual series.

Design/selection

1. Checking the specifications

WARNING

■ Use the product in the range of conditions specified for the product.
The product in this catalog is designed for use only in a compressed air system. Use with pressure or temperature exceeding the specifications range may result in damage or operation faults. (Refer to specifications) Contact CKD when using fluids other than compressed air.

2. Safety design

WARNING

■ Understand the characteristics of compressed air before designing a pneumatic circuit.
- The same functions as the mechanical, hydraulic, and electrical methods cannot be anticipated if instantaneous stopping and holding are required during an emergency stop.
- Pop-out, air discharge, or leakage due to air compression and expansion may occur.
- The supply and exhaust of the valve must operate simultaneously.
  When the supply is operated in advance, the actuator switching will be delayed.
  When the exhaust is operated in advance, the actuator speed will be uncontrollable, causing the popping out phenomenon.

■ Make sure that the switching signals of the 2-position and 3-position double solenoids are never energized at the same time.

■ When using a 3-position all ports closed valve with a custom stroke, the properties of compressed air make it impossible to brake at an accurate position. In addition, as valves and cylinders, etc., are designed to allow small volumes of air leakage, pressure retention applications are not available, as they may cause the stop position to change or cause a pressure drop.

■ Pay attention to the electric circuit during emergency stop and to the cylinder operation during power outages.
- If the 2-position double solenoid is started and then switched, it will hold that status unless a reverse operation electrical signal is input.

■ Install a “pressure switch” and “shut-off valve” on the device’s compressed air supply side.
- The pressure switch will disable operation until the set pressure is reached. The shut-off valve releases compressed air into the pneumatic pressure circuit to prevent accidents caused by operation of pneumatic components under residual pressure.

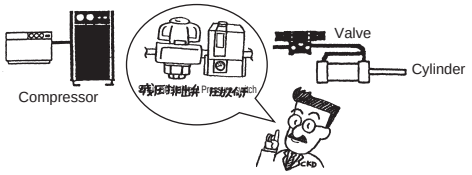

■ Do not constrict the air supply piping.
- A drop in pressure due to simultaneous operation of multiple stations may cause malfunctions.

■ Take measures to prevent physical harm or property damage in the event of failure of this product.

CAUTION

■ Check for leakage current to avoid malfunction caused by leakage current from other fluid control components.
- When using a programmable controller, leakage current may affect the solenoid valve and cause malfunction.
  Note that the values that are affected by leakage current depend on the solenoid valve.

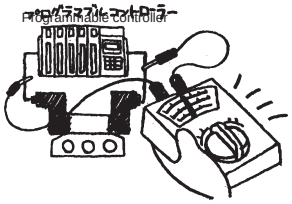

Using 100 VAC	3.0 mA or less (*1)
Using 200 VAC	1.5 mA or less
Using 12 VDC	1.5 mA or less (*2)
Using 24 VDC	1.8 mA or less (*2)

*1: 1.2 mA or less for the 4G Series.

■ Observe the following precautions when using nylon tubes or urethane tubes for piping material.
- Use flame-resistant tubes or metal steel pipes in an environment where spattering may occur.
- Use hydraulic hose when piping is for both hydraulic and pneumatic use.
- When using the standard push-in fitting on the spiral tube, fix the base of the tube with a hose clamp.
  Rotation may occur, causing a reduction in holding force.
- Use a fastening fitting in a high-temperature atmosphere. The push-in fitting cannot be used.

3. Working environment

WARNING

■ Confirm before use that the product will withstand the working environment.
- This product cannot be used in an atmosphere containing corrosive gas, chemical liquids, solvents, water or steam. If water, oil, or metal chips (spatter or cutting chips, etc.) could come in contact with the product, provide appropriate protection.
- Consult with CKD if ozone is generated in the supplied air. (Ozone-proof products are available.)
- Products other than explosion-proof solenoid valves cannot be used in an atmosphere containing explosive gas.

■ Install the product where it will not be exposed to rain, water, direct sunlight, or high temperatures.
(The explosion-proof 4F ** OE series and outdoor 4F-W series are available for outdoor use.)

■ Do not use this product in a corrosive environment.
Use in such an environment could lead to damage or operation failure.

CAUTION

■ Use clean air.
- If compressed air contains chemicals, synthetic oils containing organic solvents, salt, or corrosive gas, do not use as it can cause damage and/or operation failure.

4. Durability

⚠ WARNING

■ Decide on a method of lubricating pneumatic components, and provide correct maintenance.
- ● Is it a no-lubrication?
- ● Is it a lubrication?

Specify either of the above for control of lubricant.

■ Ultra dry air is not suitable for pneumatic components.
- ● Ultra dry compressed air will shorten the life of pneumatic components. For use, be sure to use a solenoid valve for DC voltage drive.

■ Continuous energizing during use may accelerate degradation of the solenoid valve. Contact CKD when using the solenoid valve under such conditions.
- ● When using a product with continuous energization, be sure to use items with DC voltage specifications or fluoro rubber specifications.

5. Pneumatic source

⚠ CAUTION

■ Install a pneumatic filter just before the pneumatic component in the circuit.

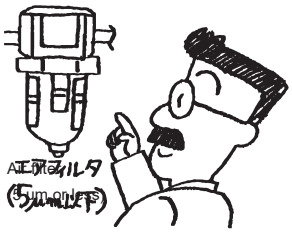

■ Do not supply anything other than compressed air.

■ Use clean compressed air that does not contain corrosive gases.

■ Use dry compressed air that does not cause moisture inside the piping.

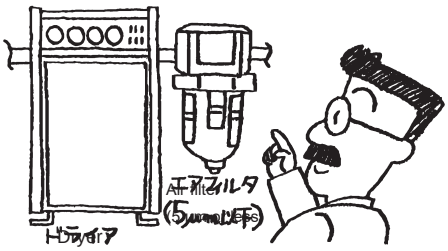

- ● Moisture will occur if the temperature drops in the pneumatic piping or pneumatic components.
- ● Operation faults could occur if moisture enters the air flow path of pneumatic components and temporarily blocks passage.
- ● Moisture could cause rust, making the pneumatic components fail.
- ● The drain will flush the lubricant oil and cause a lubrication defect.

■ Use compressed air that does not contain oil oxides, tar, carbon, etc., from the air compressor.
- ● If oil oxides, tar, or carbon enter the pneumatic components and solidify, resistance at the sliding section will increase, leading to operation failure.
- ● If the supplied lubricant mixes with oil oxides, tar, carbon, etc., the sliding section of the pneumatic component could be worn down.

■ Use compressed air that does not contain solid foreign matter.
- ● Any solid foreign matter in the compressed air can enter the pneumatic components and cause wear or locking in the sliding parts.

6. Usage method

⚠ WARNING

■ Do not narrow the exhaust port of the manifold valves.
- ● There may be cases where other cylinders are subject to unintended operation due to back pressure generated from the exhaust of the switching valve. In this case, individually install a manifold two-sided exhaust type or a single exhaust spacer equipped type with the valve causing the situation.

⚠ CAUTION

■ Make sure that the instantaneous energizing/manual override of the double solenoid 2 position valve is 0.1 seconds or more.
However, as the cylinder may malfunction due to secondary side load conditions, it is recommended that energizing/manual override is performed until the cylinder reaches the stroke end position.

■ For manual override of the push type, push the manual override straight.

■ Do not use the product with the air supply port throttled or released to atmospheric pressure.

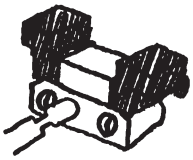

Do not restrict the air supply port!

- ● With the internal pilot, the supply pressure may drop lower than the specified range and cause malfunctioning. In this case, use the external pilot.

■ Continuous energizing for long periods may accelerate degradation of the solenoid valve. Consult with CKD when energizing this device continuously. Furthermore, use caution under the following working conditions, as with continuous energization:
- When performing continuous energizing for a long period of time or when the energized time in a single day will be longer than the non-energized time

Install with an eye to heat dissipation.

■ With the internal pilot solenoid valve, turn the power on after applying the supply pressure.
The main valve may stop at an unintended position and prevent proper switching.

7. Securing of space

⚠ CAUTION

■ Secure sufficient space around the solenoid valve for installation, removal, wiring, and piping work.

8. Clearly indicated in the instruction manual

⚠ CAUTION

■ Indicate the maintenance conditions in the device's instruction manual.
- ● The product's performance may drop too low to maintain an appropriate safety level depending on usage conditions, working environment and maintenance status. With correct maintenance, the product functions can be used to the fullest.

Safety Precautions

Be sure to read this section before use.
Refer to this section for detailed precautions for Individual series.

Mounting, installation and adjustment

1. Installation

WARNING

■ When mounting a valve, do not use a mounting method that relies on support from the piping.
- Mount and fix the valve body.

■ After mounting, do not clean or paint with water or solvent.
- Otherwise some resin parts may be damaged.
- Paint could plug the pilot exhaust port and result in malfunctions.

■ Do not narrow the exhaust port to a smaller one than the bore size of the piping connection port.
(The pilot exhaust port is also included as an exhaust port)
- Either attach a silencer or install a solenoid valve so that the exhaust port is facing downwards.
  An inhale effect may be generated at the exhaust port due to valving element operations and cause the intake of foreign matter near the exhaust port.
  If the exhaust port is facing upwards, foreign matter may fall into it.
- The actuator will not operate correctly if the exhaust air is not discharged smoothly. With the manifold, the exhaust air may prevent the correct operation of other solenoid valves.

■ Do not block the pilot exhaust port (PR port).
- Pilot pressure will not be discharged and will fail to operate.

■ Remove the valve packaging and dust-proof seal of the piping port just before starting piping.
- Removing the dust-proof seal of the piping port before the piping work starts could allow foreign matter to enter the valve from the piping port and cause failure or misoperation.

■ Check that tubing is not worn or damaged.
- Tubing could collapse, rupture, or become dislocated.

2. Pre-operation confirmation

CAUTION

■ When supplying compressed air after connecting pipes, do not suddenly apply high pressure.
- The pipe connection could dislocate, causing the pipe tube to fly out, leading to accidents.
- Caution: If compressed air is supplied too slowly, sealing pressure may not be generated depending on the internal sealing mechanism of the solenoid valve and may cause air leakage.

■ As air leakage may occur when compressed air is supplied with the two 3-port valves integrated (differential pressure return) without piping to the output port, be sure to supply the compressed air after piping the output port.

■ Before supplying compressed air after connecting pipes, check that there are no air leaks at any pipe connections.
- Apply a leakage detection agent to pipe connections with a brush and check for air leaks.

3. Adjustment

WARNING

■ When the manual operation device of the solenoid valve has been operated, always be sure to operate the device after reset to the origin (default position).
Be sure to check that the non-locking has automatically returned or that the locking is in a state where the lock is released (OFF state).

[Example]

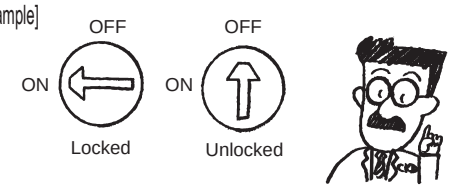

Note: As this varies depending on the model, refer to the pages of each model for operation methods.

- The solenoid valve will operate as soon as the pneumatic source power is turned ON, which is hazardous.
- When the manual override device is used for operation at the operating position, abnormal operation is a risk.

4. Piping

⚠ CAUTION

■ When connecting pipes, wrap sealing tape in the opposite direction from the threading, from the inside position to within 2 mm from the pipe end.

- If sealing tape protrudes from the pipe threads, it could be cut when screwing the bolts in. This could cause the tape to enter the solenoid valve, causing failures.

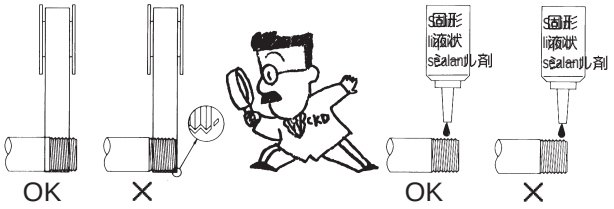

■ Open the package in a cleanroom.

- The product is packaged in a cleanroom using antistatic sheet and packed in a packaging box. When installing in the cleanroom, take the product out of the box outside the cleanroom and open the package in the cleanroom.

■ Always flush just before piping pneumatic components.

- Any foreign matter that has entered during piping must be removed so it does not enter the pneumatic components.

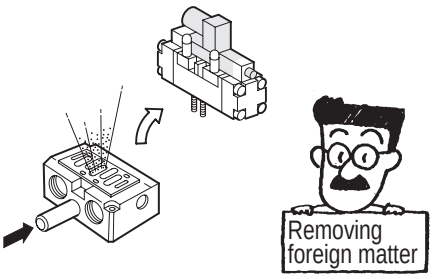

■ Use appropriate torque to tighten the pipes when connecting them.

- The purpose is to prevent air leakage and damage to bolts. irst tighten the bolts by hand to ensure that the threads are not damaged, then use a tool.

Port thread	Tightening torque N·m
M3	0.3 to 0.6
M5	1.0 to 1.5
Rc 1/8	3 to 5
Rc 1/4	6 to 8

■ When piping to the product
Properly connect pipes by confirming the piping port position with the display, etc., on the product. Incorrect piping may cause irregular operation of the actuator.

■ Connect piping so that connections are not dislocated by equipment movement, vibration, or tension.

- Control of actuator speed will be disabled if piping on the exhaust side of the pneumatic circuit is disengaged.
- When using the chuck holding mechanism, the chuck may be released, creating a hazardous state.
- Cut the push-in fitting tube at right angles with a dedicated tool.
- Confirm that the tube has been inserted properly, and make sure that there is no tension during use. The tube could be dislocated or damaged if there is any tension.

■ Make sure that there is no torsion, tension or moment load applied to the fitting or the tube.

■ Use the designated tube.

- Particularly in the case of super-flexible urethane tubes, attach insert sleeves for use.

■ Securely insert the tube to the tube end, and make sure that the tube cannot be pulled off.

■ Cut the tube with a dedicated cutter and always at a right angle.

Use/maintenance

1. Maintenance and inspection

⚠WARNING

■ When the manual operation device of the valve has been operated, always be sure to operate the device after reset to the origin (default position).
Be sure to check that the non-locking has automatically returned or that the locking is in a state where the lock is released (OFF state).
[Example]

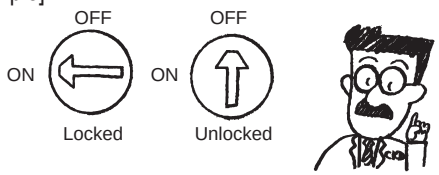

Note: As this varies depending on the model, refer to the pages of each model for operation methods.

- The solenoid valve will operate as soon as the power is turned ON, which is hazardous.
- When the manual override device is used for operation at the operating position, abnormal operation is a risk.

■ Conduct daily inspections and regular inspections to ensure that maintenance control is done correctly.

- If maintenance is not correctly managed, the product's functions could deteriorate markedly and lead to a shortened service life, faults and accidents.

1. Pressure management of supplied compressed air pressure
- Is the set pressure supplied? Does the pressure gauge indicate the set pressure while the equipment is operating?

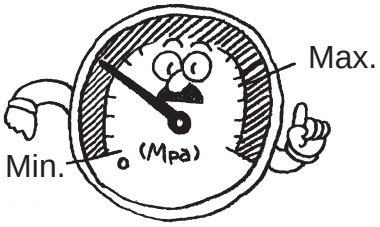

2. Control of pneumatics filter
- Is the drain correctly discharged?
  Is the bowl or element clean enough to use?

3. Control of compressed air leaks from piping connections
- Is the state of the connection, especially at movable sections, normal?

4. Valve operational status control
- Are operations delayed? Is exhaust normal?

5. Control of pneumatic actuator operation
- Is operation smooth? Is the end stop state normal?
  Is coupling with the load normal?

2. Removal

⚠WARNING

■ Before conducting maintenance, turn the power OFF, stop the supply of compressed air and make sure that there is no residual pressure.

- Observe the conditions to ensure safety.

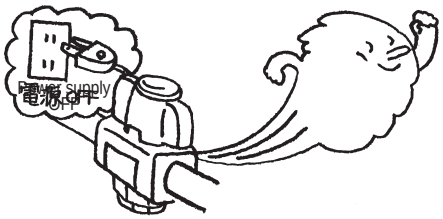

3. Disassembly/Assembly

⚠WARNING

■ Read the relevant product's instruction manual thoroughly and fully familiarize yourself with the task before disassembling or assembling the solenoid valve.

- Personnel must be fully familiar with solenoid valve structure and operational principles and safety requirements.
- Pneumatic Pressure Skill Test Class 2 or higher level is required.

Reduced wiring valve / product-specific cautions (MN4E/M(N)4G$^{A}_{B}$ Series)

⚠ CAUTION

Install the wiring while sufficiently checking the polarity, voltage, and terminal numbers.

- Voltage drop may occur due to simultaneous energizing or cable length.
  Confirm that the voltage drop for the solenoid is within 10% of the rated voltage.

(1) Serial transmission (with T6* and T7*)

- These models are dedicated for use with a working voltage of 24 VDC.
- If operation may be affected by noise, wire the power supply independently for each manifold solenoid valve when possible.
- Keep the power supply cable as short as possible.
- Do not share power with an inverter or components causing motor noise, etc.
- Do not lay the power wire, signal wire, and other power cables in parallel.
- The slave units are dedicated for each manufacturer. There is no compatibility.
- For how to wire the slave unit, follow the instructions provided from the PLC manufacturer. The terminal numbers of the slave unit are displayed on the attachment side of the slave unit.
- For information regarding the PLC, please contact the corresponding PLC manufacturer.
- When installing a manifold solenoid valve vertically, install the slave unit at the top end.

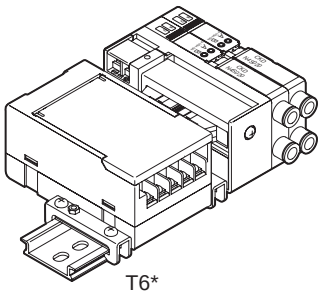

T6*

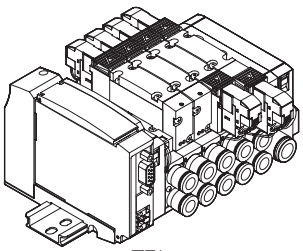

T7*
(4G Series)

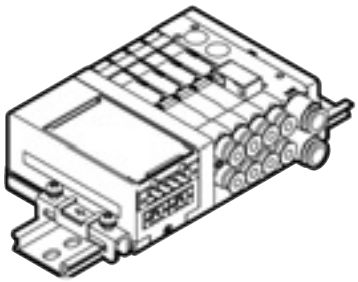

T7*
(MN4E Series)

(2) Connector (T50)

- As it is necessary to match the signal arrangement of the PLC output unit with the signal arrangement on the valve side, direct connections with a PLC are currently limited. Establish connections with wiring connection examples (MN4E series: page 404, M4G$^{A}_{B}$/MN4G Series: page 735) as a reference. For the cables, use dedicated cables for each PLC manufacturer.
- These models are dedicated for use with a working voltage of 12 and 24 VDC.
- When connecting the T50, T50A type to a general output unit, use the + terminal (20, 10) of the 20P connector as the + side common, and use the NPN transistor output open collector type for the drive circuit. Contact CKD when using the PNP transistor output.
- Do not connect this solenoid valve to the input unit as major faults could occur in this device and in peripherals. Connect this solenoid valve to the output unit.
  Although common connectors are employed with the input units and output units of the relay terminal series by OMRON and Panasonic Electric Works Co., Ltd., the pin arrangement and polarity of the power supply are different. The pin arrangement of the T50 type of this solenoid valve is the same pin arrangement as the above output unit.

⚠ CAUTION

■ Install so that no force is applied to the connector section. The fixing screws may loosen if force is applied to the connector section.

- The connector rotates upwards and sideways. Further fasten the fixing screws after installation of the solenoid valve can fix the connectors.
- Make sure that the tightening torque of the fixing screws is 0.3 to 0.36 N·m.

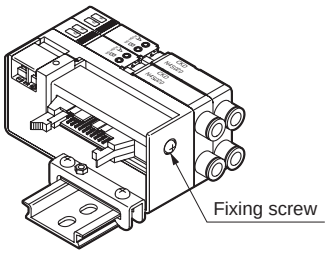

Reduced wiring valve / product-specific cautions (MN4E / M(N)4G A/B Series)

⚠ CAUTION

(3) Connector (T30, T31, T51, T52, T53, TM*)

- These models are dedicated for use with a working voltage of 12 and 24 VDC.

⚠ CAUTION

■ Install so that no force is applied to the connector section. The fixing screws may loosen if force is applied to the connector section.

- The connector rotates upwards and sideways.
  Further fasten the fixing screws after installation of the solenoid valve can fix the connectors.
- Make sure that the tightening torque of the fixing screws is 0.3 to 0.36 N·m.

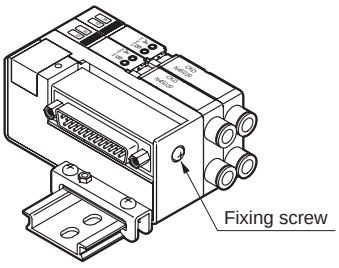

(4) Terminal block (T10, 11)

- Install the terminal block in a location that is out of reach or place a cover on the unit.

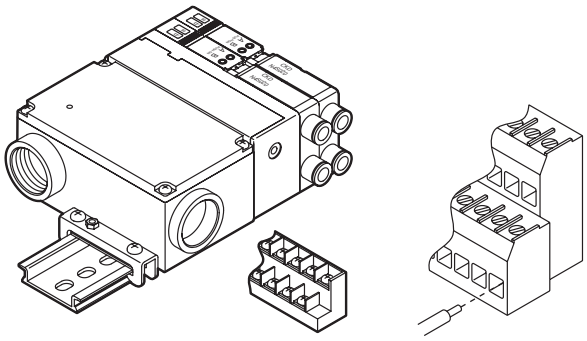

T10 terminal appearance

T11 terminal appearance

MN3E/MN4E

3, 4-port pilot operated valve

PLC compatible reduced wiring block manifold

Overview

More compact (39.5 mm high) and high-performance MN4E Series, cartridge 3, 4-port block manifold, is also available.

Features

Significant reduction of space for installation

Various size options including 10 mm and 7 mm valve widths and 7 mm pitch manifold are available.
Use the compact 7 mm pitch manifold to downsize the system and increase the density.

High performance

12 ms high-speed response is the most suitable for balancing ports A and B.

Easy-to-use

Usability of fittings has been improved to fit the compact valve. Various electrical connections including 32-point serial transmission are also available.

Environment- and safety-conscious

Environment-friendly wires have been adopted for internal wiring. An additional preventive measure has been implemented to prevent accidental operation of the valve.

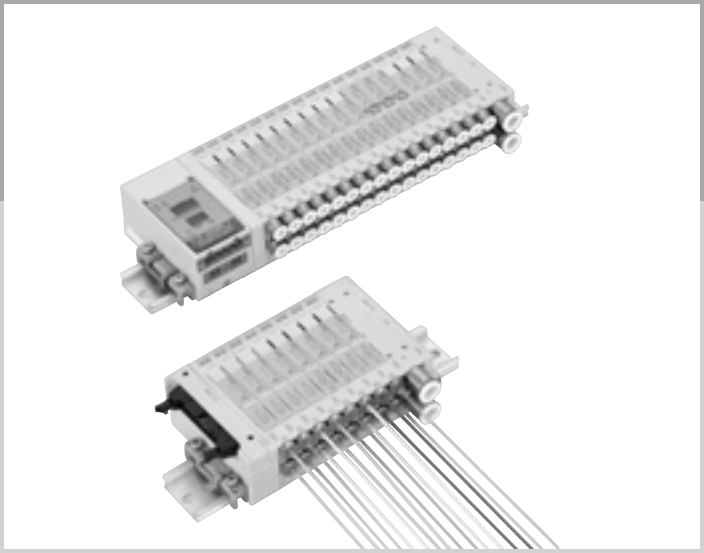

CONTENTS

Product introduction 336
Wiring variations 338
Series variation 340

Reduced wiring block manifold

● **MN3E00/MN4E00 344**
● **MN3E0/MN4E0 360**
● **MN3EX0/MN4EX0 376**

Block configurations 378
Technical data
(1) Notes on wiring 389
(2) How to disassemble/assemble block manifold 405
(3) Individual power supply (AUX) compatible How to operate push-in fitting for fiber tube 406
(4) Wiring structure between electrical block and valve block 407
Block manifold specifications 409
⚠ Safety precautions 412

Introducing pilot operated solenoid valve manifold of

Compact/reduced wiring 3, 4-port valve block manifold MN3/4E Series

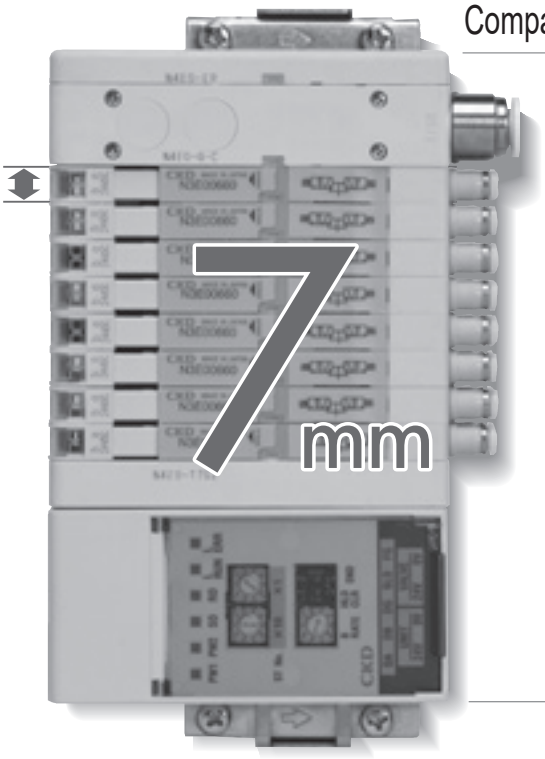

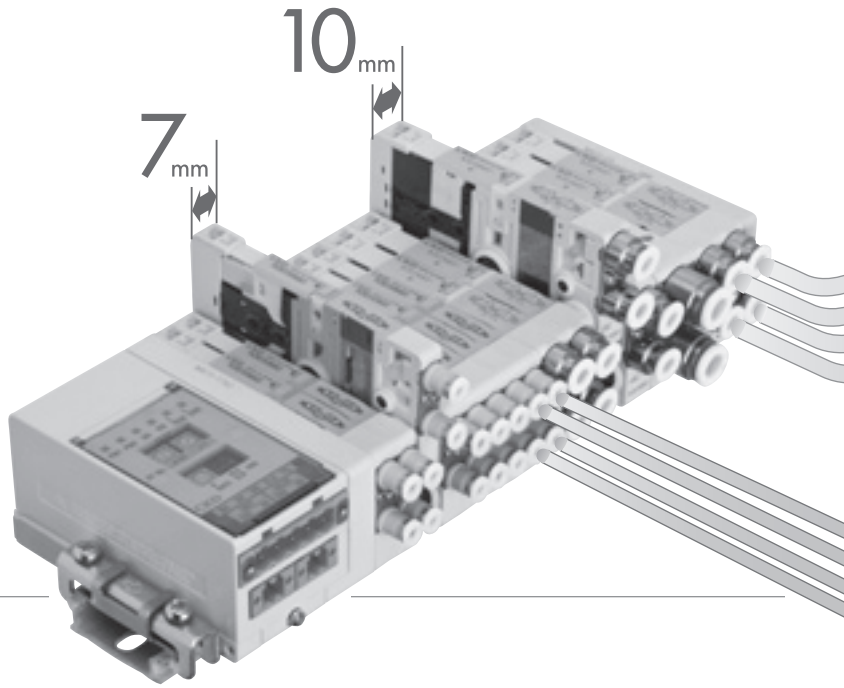

NEW **MN3/4E00 Series**

ECO ø3 HIGH SPEC SAFETY

Compact, space-saving, and low power consumption design

Environmental conservation RoHS

Lighter weight and reduced material usage by downsizing/energy saving. We were among the earliest to reduce chemical substances affecting the environment, including lead-free solder and materials compatible with JIG-101A level A.

Compact/space saving NEW

Introducing MN3/4E00 series of 7 mm valve block width and 7 mm pitch manifold in addition to the MN3/ 4E0 series of 10 mm valve block width type.
Use the compact 7 mm pitch manifold to downsize the system and increase the density.

ECO Energy saving NEW

MN3/4E0 Series: 0.6 W
MN3/4E00 Series: 0.4 W
Power saving (Option E) further reduces power consumption.

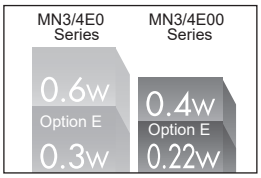

* Value for models with a lamp.

ø3 push-in fitting is available NEW

Along with reduction of piping volume and ensuring flow rate, it supports ø3 tubes, as well as ø1.8 tubes and contributes to the space saving of tube piping.

Variety

■ A wide range of electrical connections and options

A wide range of electrical connections such as serial transmission corresponding to various connectors and networks are available.

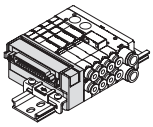
D sub-connector

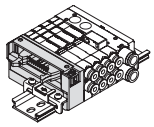
Flat cable connector

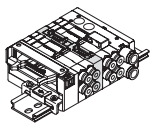
Intermediate electrical block

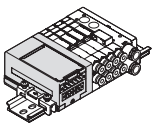
Serial transmission

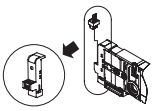
Individual wiring (7 mm,10 mm)

Individual wiring is also available in MN3/4E00 Series!!

7 mm pitch, maintaining high performance and safety

that is highly integrated/space-saving & high performance.

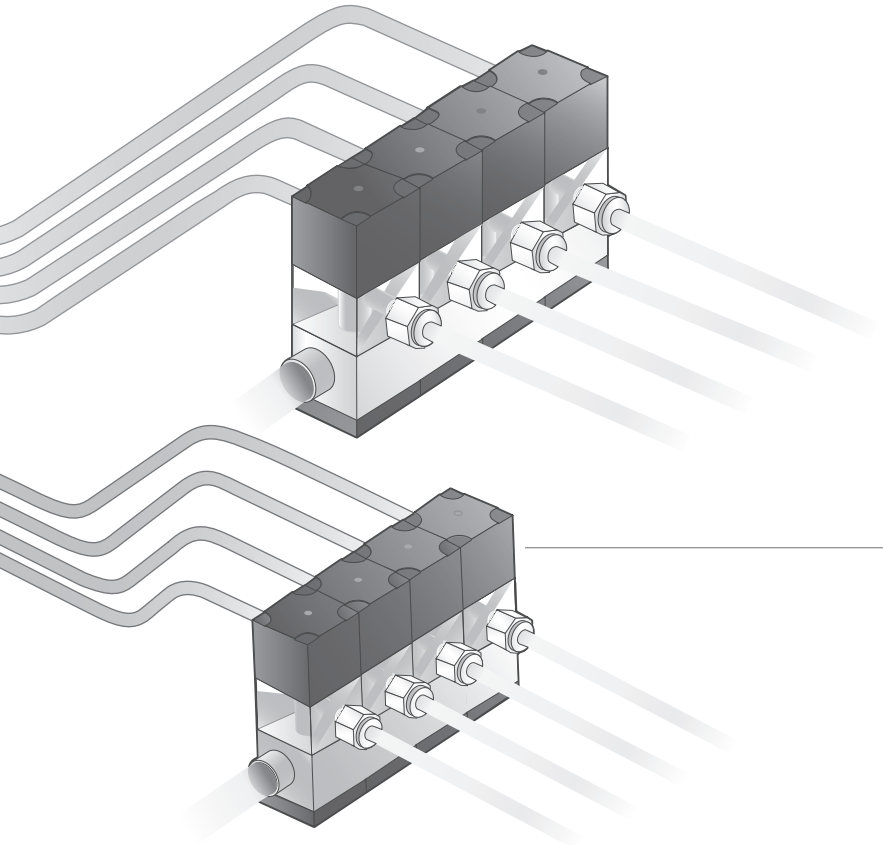

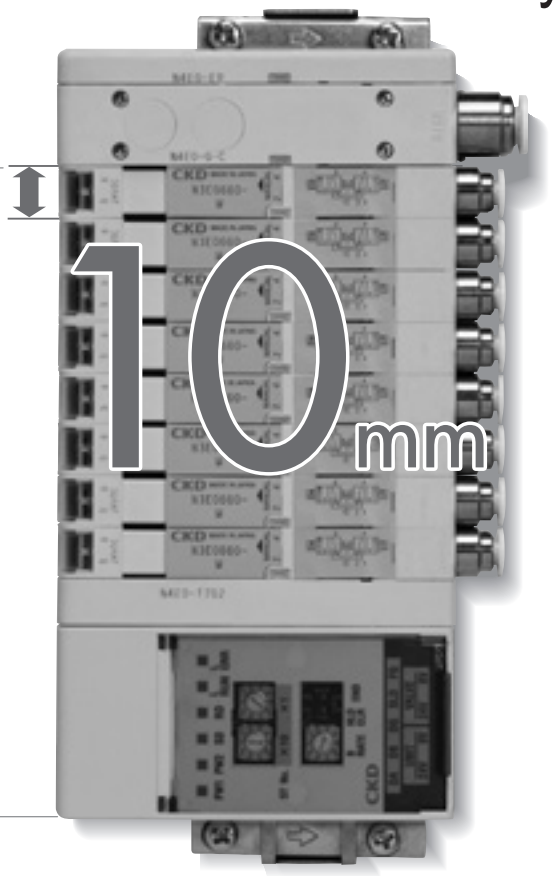

MN3/4E0 Series

ECO HIGH SPEC SAFETY

High performance block manifold with excellent response. Compared to conventional models, space saving of approx. 50%.

HIGH SPEC High performance

■ 12 ms response for balancing ports A and B.
(Our data value with N3D0 two 3-port valves integrated)

■ Cumbersome wiring work is not required
By connector connections, wiring is completed at the same time as assembling.
The regularity of the connector pin array remains undisturbed by electrical connections from both the left and right wiring blocks or by an increase or decrease in the valves.

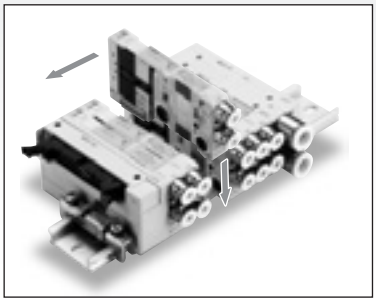

Assembly structure

SAFETY Safety

■ Preventing malfunction
Exhaust check valve, manual override cover to prevent misoperation and air supply filter to prevent entry of foreign matter are provided as standard.
Pursuing safety to prevent valve malfunction.

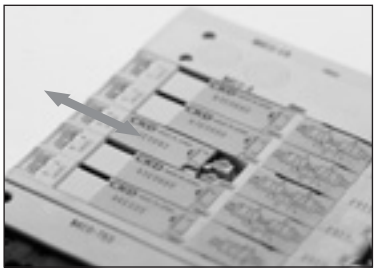

Manual cover

A wide range of wiring options

Wiring has been simplified to improve usability.

MN4E0
4E00

● D sub-connector (N4E0-T30 (N))

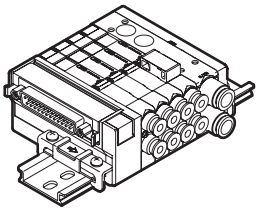

Connectors used for T30 wiring, called a D sub-connector, is used widely for FA and OA devices. The 25P in particular is also an RS-232-C Standards designated connector, used for personal computer communication.

● Flat cable connector (N4E0-T5*)

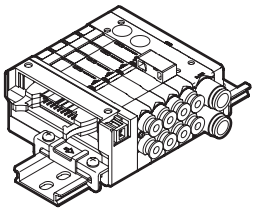

Connectors used for T5* wiring complies with MIL Standards (MIL-C-83503).
Wiring work is simplified with the pressure welded flat cable.
Pin numbers are assigned differently based on the PLC maker, but the function assignment is the same.

● Intermediate wiring block (N4E0-TM*)

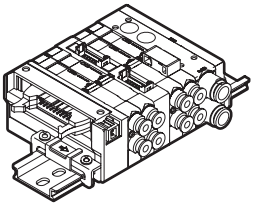

A reduced wiring connection can be made to the center of the manifold.
The 10P flat cable connector and 6P RITS connector are available.

● Serial transmission (close contact) (N4E0-T7*)

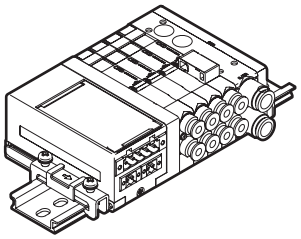

T7D1 T7D2	DeviceNet compatible (16 points, 32 points)
T7G1 T7G2	CC-Link compatible (16 points, 32 points)
T7N1 T7N2	S-LINK V compatible (16 points, 32 points)
T7EC1 T7EC2 T7ECT1 T7ECT2	EtherCAT (16 points, 32 points)
T7EN1 T7EN2	EtherNet/IP (16 points, 32 points)

● Serial transmission (N4E0-T6G1)

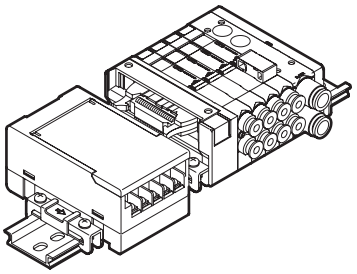

T6G1	CC-Link compatible (16 points)

● Type with individual power supply function (AUX) (MN3E0/MN4E0 Series only)

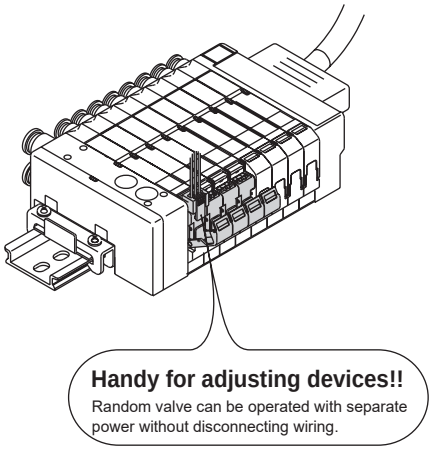

Individual external input is possible even with the reduced wiring manifold. Individual valve operation is possible without stopping the system.
Any arbitrary valve can be operated alone with an external power supply while common wiring is connected.
Compact design that keeps the same height.

● Application examples

Effective for equipment adjustment at startup or to facilitate maintenance.
Electrically operate a random valve without disconnecting wiring.
Electrically cut off any arbitrary valve without disconnecting the wiring.

* The valve is cut off from the wiring in the manifold when the external input socket is inserted, so this can also be used as a temporary individual cut-off switch.

● Individual wiring system

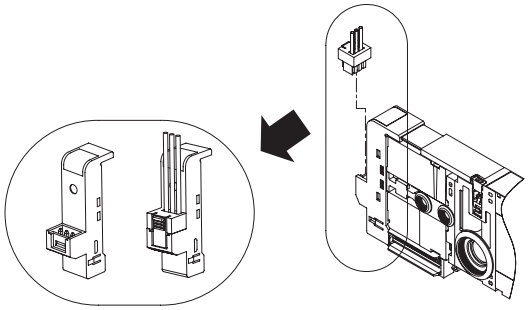

Inputs can be made from individually from another system, independent from the common wiring using a reduced wiring system.

● Dummy block

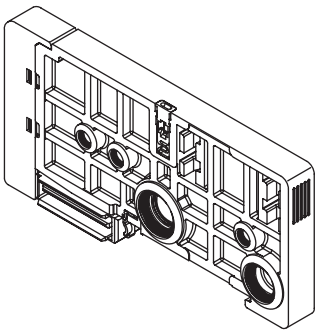

Install a dummy block of appropriate wiring specifications if more valve blocks are added in future. This will enable the addition (replacement) of valve blocks without changing the reduced wiring signal assignment.

MN3E$^{0}_{00}$ /MN4E$^{0}_{00}$ Series

	External appearance of series	Position Number of solenoids (*1) JIS symbol * The JIS symbols for the actual part may differ from these drawings due to the relation of the space and port position.
3-port valve	**MN3E00** 3-port valve (Valve pitch 7.0 mm)	3-port valve ● 2-position NC self reset (differential pressure spring return) 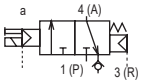 **N3E0010/N3E010** ● 2-position NO self reset (differential pressure spring return) 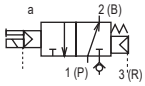 **N3E00110/N3E0110** ● 2-position NC self hold 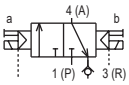 **N3E0020/N3E020** ● 2-position NO self hold 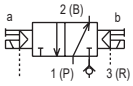 **N3E00210/N3E0210**
	MN3E0 3-port valve (Valve pitch 10.0 mm)	
Dual 3-port valve integrated	**MN3E00** Dual 3-port valve integrated (Valve pitch 7.0 mm)	Dual 3-port valve integrated ● NC/NC self reset (differential pressure return) 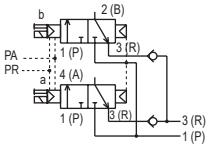 **N3E00660/N3E0660** ● NC/NC self reset (differential pressure spring return) 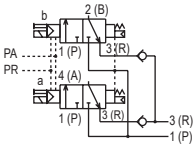 **N3E0066S0/N3E066S0** ● NC/NO self reset (differential pressure return) 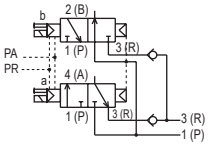 **N3E00670/N3E0670** ● NC/NO self reset (differential pressure spring return) 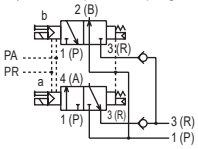 **N3E0067S0/N3E067S0**
	MN3E0 Dual 3-port valve integrated (Valve pitch 10.0 mm)	● NO/NC self reset (differential pressure return) 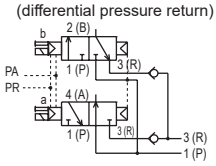 **N3E00760/N3E0760** ● NO/NC self reset (differential pressure spring return) 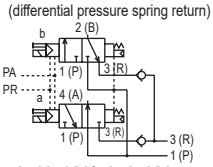 **N3E0076S0/N3E076S0** ● NO/NO self reset (differential pressure return) 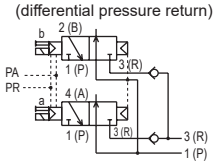 **N3E00770/N3E0770** ● NO/NO self reset (differential pressure spring return) 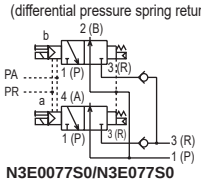 **N3E0077S0/N3E077S0**
4-port valve	**MN4E00** 4-port valve (Valve pitch 7.0 mm)	4-port valve ● 2-position single self reset (differential pressure spring return) 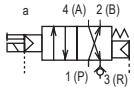 **N4E0010/N4E010** ● 2-position double self hold 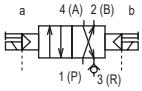 **N4E0020/N4E020**
	MN4E0 4-port valve (Valve pitch 10.0 mm)	● 3-position all ports closed 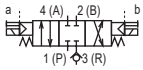 **N4E030** ● 3-position A/B/R connection 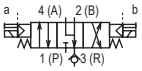 **N4E040** ● 3-position P/A/B connection 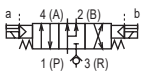 **N4E050**

*1: Refer to "Self reset" on page 412 for operation of the self reset type.
*2: Effective cross-sectional area S and sonic conductance C are converted as S ≈ 5.0 × C.

Flow characteristics C [dm³/(s·bar)] (*2)	Voltage (V)	Switching position														Port size of port A/B									Electrical connections						Reference page
		3-port valve				Dual 3-port valve integrated				4-port valve						Push-in fitting				Female thread											
		Single N.C.	Single N.O.	Double N.C.	Double N.O.	N.C. on A side, N.C. on B side	N.C. on A side, N.O. on B side	N.O. on A side, N.C. on B side	N.O. on A side, N.O. on B side	2-position single	2-position double	3-position all ports closed	3-position A/B/R connection	3-position P/A/B connection	Mix	ø1.8 C18	ø3 C3	ø4 C4	ø6 C6	M3 M3	M5 M5	Fiber tube fitting CF	ø1/8 C3N	ø5/32 C4N	Individual wiring D*	D sub-connector T30□ T30N□	Flat cable T5*	Intermediate electrical block TM*	Electrical block mix TX	Serial transmission T6G1 T7□	
0.3		●	●	●	●										●	●	●	●		●			●	●	●	●	●	●	●	●	344
0.54		●	●	●	●										●	●		●	●		●	●	●	●	●	●	●	●	●	●	360
0.3	(*3) 24 VDC 12 VDC					●	●	●	●						●	●	●	●		●			●	●	●	●	●	●	●	●	344
0.50	*3: Serial transmission is 24 VDC only.					●	●	●	●						●	●		●	●		●	●	●	●	●	●	●	●	●	●	360
0.3										●	●				●	●	●	●		●			●	●	●	●	●	●	●	●	344
0.54 0.50 (N4E030 N4E050)										●	●	●	●	●	●	●		●	●		●	●	●	●	●	●	●	●	●	●	360

Wiring method

T30(N) T30(N)R — D sub-connector

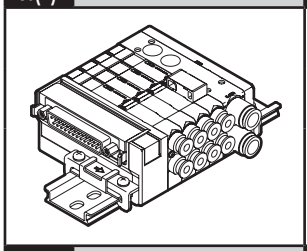

TM1A — Intermediate electrical block (RITS6PX2)

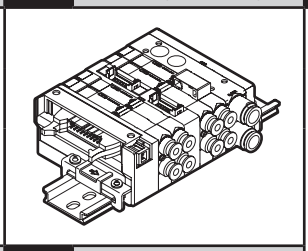

T50 T50R — 20 pin flat cable connector (with power supply terminal)

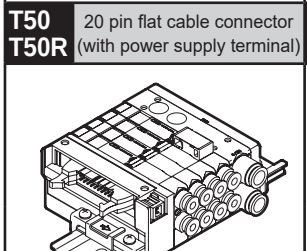

TM1C — Intermediate electrical block (RITS6PX1)

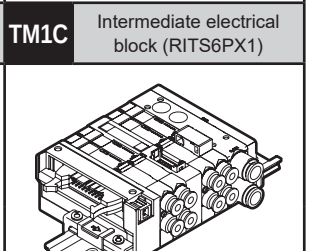

T51 T51R — 20 pin flat cable connector (without power supply terminal)

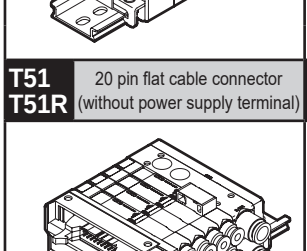

TM52 — Intermediate electrical block (10 pin flat cable connector)

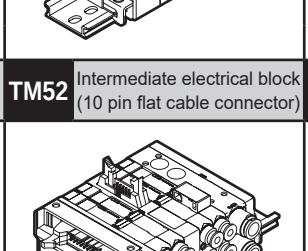

T52 T52R — 10 pin flat cable connector (without power supply terminal)

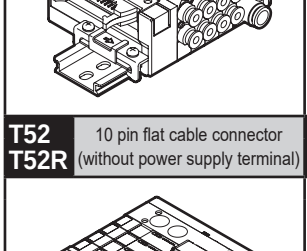

T6G1 — Serial transmission

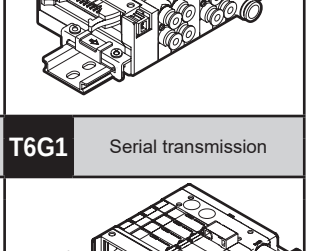

T53 T53R — 26 pin flat cable connector (without power supply terminal)

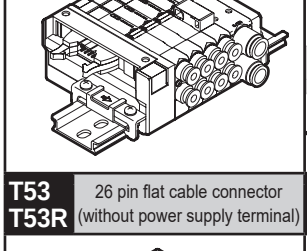

T7* — Serial transmission (close contact)

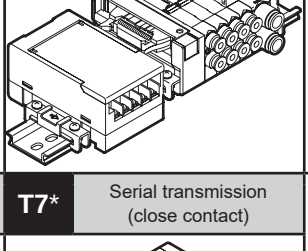

Manual operating device

Blank ● Common for locking and non-locking types (standard)

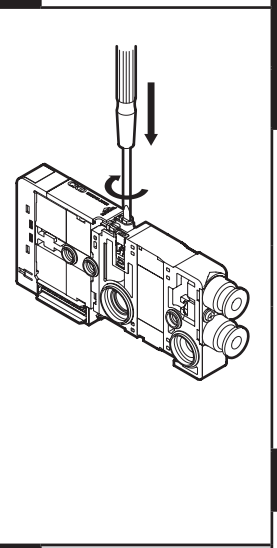

M — For non-locking

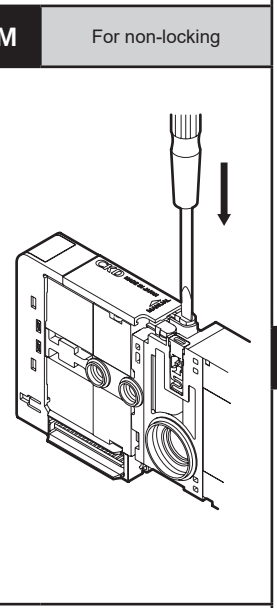

Other options

E — Low heat/energy saving circuit

A — Ozone proof

F — A/B port filter integrated

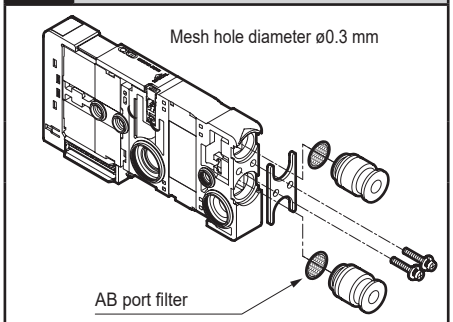

U — Built-in individual power supply function (AUX)

* MN3E0/MN4E0 only

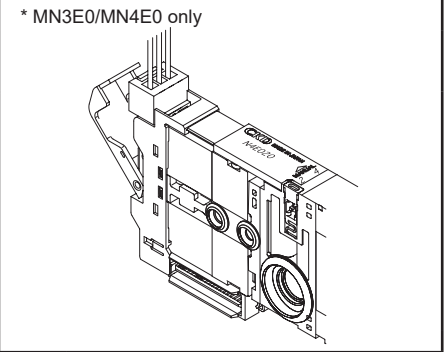

D* — Individual wiring D-connector

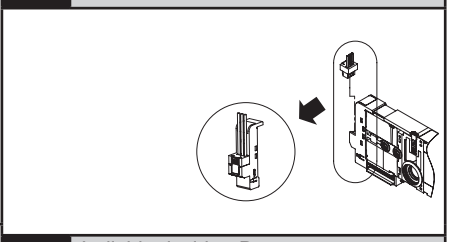

D* — Individual wiring D-connector without socket/with socket and terminal

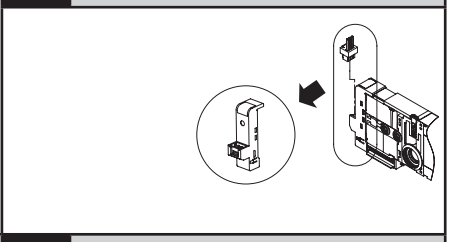

Dummy block

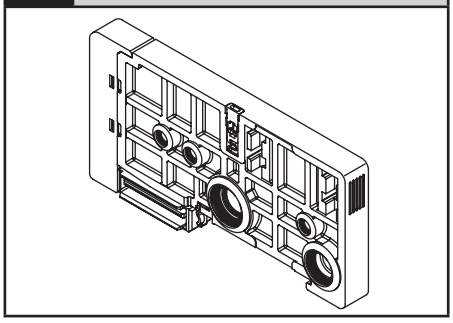

Electric connection circuit diagram

With surge suppressor and indicator (supplied as standard)

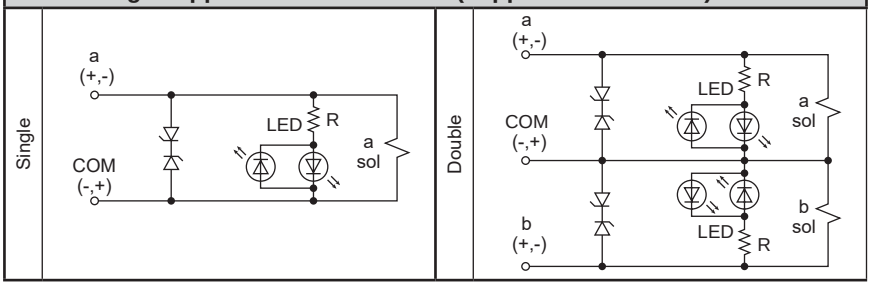

With surge suppressor and indicator (options: E and U)

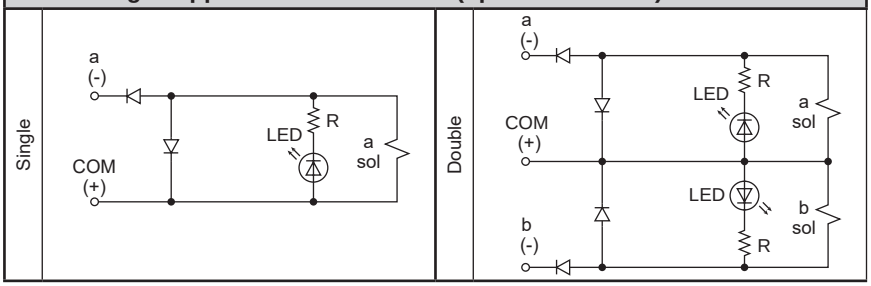

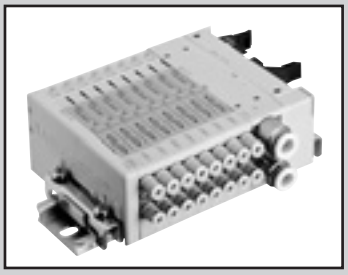

Reduced wiring block manifold pilot operated 3, 4-port valve

MN3E00/MN4E00 Series

Structure and material restriction

	Structure	Model No.
P7 Series	Exhaust treatment	− P70

Common specifications

Descriptions	
Manifold method	Block manifold
Manifold	Common supply/exhaust, check valve integrated (*1)
Working fluid	Compressed air
Valve and operation	Pilot operated soft spool valve
Max. working pressure MPa	0.7
Min. working pressure MPa	0.2
Proof pressure MPa	1.05
Ambient temperature °C	5 to 55
Fluid temperature °C	5 to 55
Lubrication	Not required (*2)
Degree of protection	Dust proof
Vibration resistance m/s^2	50 or less
Shock resistance m/s^2	300 or less
Atmosphere	Containing corrosive gas is not permissible
Manual operating device	Locking/non-locking common or non-locking

*1: Check valve blocks the back pressure from adjacent air devices, etc. However, the structure does not let the pressure seal be held continuously, so do not use for other than the back pressure block.

Electrical specifications

Descriptions		
Rated voltage V		12, 24 VDC
Voltage fluctuation range		±10% (using serial transmission +10%, −5%)
Holding current A	24 VDC	0.017 (0.009) (*3)
	12 VDC	0.033 (0.018) (*3)
Power consumption W	24 VDC	0.4 (0.22) (*3)
	12 VDC	
Thermal class		B
Indicator		LED

*2: As this product is non-lubrication, adding oil may cause leakage of the grease initially sealed in, which may prevent the product from working at its maximum performance.
*3: Values shown in ( ) are for low-heat and energy saving circuit. When you use the valve block of low-heat and energy saving circuit, power supply is limited to the plus common.

Individual specifications

Item \ Port		3-port valve	4-port valve	Dual 3-port valve integrated (*1)
Port size	A/B port	ø1.8, ø3, ø4 push-in fitting, M3		
	P/R port	ø6, ø8 push-in fitting		
	External pilot port	ø6 push-in fitting		-

*1: The two 3-port valve integrated types use the main pressure to operate the valving element, and therefore cannot be used with the external pilot. Check for sufficient supply air flow that the supply pressure does not drop below the min. working pressure due to the operation of the connected load (air operated valve), etc.

Max. number of stations energized by manifold

● T3□/ T5□/ TM□/ T6G1

Item		MN3E00/MN4E00								
		T30(N)	T50	T51	T52	T53	TM1A	TM1C	TM52	T6G1
Max. No. stations	Standard wiring	24 stations	16 stations	18 stations	8 stations	24 stations	10 stations	5 stations	8 stations	16 stations
	Double wiring	12 stations	8 stations	9 stations	4 stations	12 stations	5 stations	2 stations	4 stations	8 stations
Max. No. of solenoids		24 points	16 points	18 points	8 points	24 points	10 points	5 points	8 points	16 points

● T7□

Item		MN3E00/MN4E00									
		T7D1	T7D2	T7G1	T7G2	T7N1	T7N2	T7EC□1	T7EC□2	T7EN1	T7EN2
Max. No. stations	Standard wiring	16 stations	32 stations	16 stations	32 stations	16 stations	32 stations	16 stations	32 stations	16 stations	32 stations
	Double wiring	8 stations	16 stations	8 stations	16 stations	8 stations	16 stations	8 stations	16 stations	8 stations	16 stations
Max. No. of solenoids		16 points	32 points	16 points	32 points	16 points	32 points	16 points	32 points	16 points	32 points

Performance/characteristics by model

Item \ Port			3-port valve	4-port valve	Two 3-port valves integrated
Response time (*1) ms	2-position	Single	20 or less	20 or less	20 or less
		(*1) ms	20 or less	20 or less	-

*1: The response times are values with supply pressure of 0.5 MPa, without lubrication.

Flow characteristics

		P→A/B		A/B→R	
		C [dm³/(s·bar)]	b	C [dm³/(s·bar)]	b
3-port valve	2-position	0.30	0.20	0.32	0.24
4-port valve	2-position	0.30	0.20	0.32	0.24
Dual 3-port valve integrated	2-position	0.30	0.20	0.32	0.24

*1: Effective cross-sectional area S and sonic conductance C are converted as S ≒ 5.0 × C. *2: Values for ø4 push-in fitting

Slave unit specifications

Item		T6G1 (*1)	T7D1 T7D2	T7G1 (*1) T7G2	T7N1 T7N2	T7EC□1 T7EC□2	T7EN1 T7EN2
Power supply voltage	Unit side	24 VDC ±10%	24 VDC ±10%				
	Valve side	24 VDC +10% −5%	24 VDC +10% −5%				
	Communication side	-	11 to 25 VDC	-			
Current consumption	Unit side	100 mA or less (When all points output ON)	T7D1: 60 mA or less T7D2: 85mA or less (When all points output ON)	T7G1: 65mA or less T7G2: 90mA or less (When all points output ON)	T7N1:40mA or less T7N2:50mA or less (When all points output ON)	120 mA or less (When all points output ON)	120 mA or less (When all points output ON)
	Valve side	15 mA or less (when all points are OFF)	15 mA or less (when all points are OFF)				
	Communication side	-	50 mA or less	-			
Output points		16 points	T7D1: 16 points T7D2: 32 points	T7G1: 16 points T7G2: 32 points	T7N1: 16 points T7N2: 32 points	T7EC□1: 16 points T7EC□2: 32 points	T7EN1: 16 points T7EN2: 32 points
Occupied number		1 station	T7D1: 2 bytes T7D2: 4 bytes	T7G1: 1 station T7G2: 1 station	T7N1: output 16 points T7N2: output 32 points	T7EC□1: 1 address T7EC□2: 1 address	T7EN1: 1 address T7EN2: 1 address

*1: CC-Link of Ver.1.10

Weight

		D sub-connector T30(N)	Flat cable connector T5*	Intermediate electrical block		Serial transmission		
				TM1*	TM52	T6G1	T7*	T7E**
Electrical block (g)		67	59	32	34	205	128	145
Supply and exhaust block (g)		Q/QZ	QK	QKZ	QX		QKX	
	Fitting Lateral	64	69	79	56		61	
	Fitting Facing up	90	94	98	62		66	
Valve block (g)		2-position single	2-position double	Dual 3-port valve integrated				
	Fitting Lateral	31.5	35.0	35.0				
	Fitting Facing up	37.5	41.0	41.0				
Dummy block (g)		MPS/MPD						
		20						
End block (g)		ER/EL						
		40						
DIN rail (g)		-						
		0.19 g/mm						

How to order manifold D sub/flat cable connector

* Refer to page 350 for serial transmission.

● Discrete valve block

N (3) E00 (1) 0 - (C3) - (M) (D2) (W) (EF) —— (3) - P70

● Block manifold

MN (4) E00 (1) 0 - (C3) - (M) (T53) (D2) ( ) (E) - (5) - (3) - P70

- MN: DIN rail mount
- (4): Ⓐ Valve
- (1): Ⓑ Solenoid position
- (C3): Ⓒ Port size
- (M): Ⓓ Manual operating device
- (T53): Ⓔ Wiring method
- (D2): Individual wiring
- ( ): Ⓕ Terminal and connector pin wiring
- (E): Ⓖ Option
- (5): Ⓗ Station No.
- (3): Ⓘ Voltage
- P70: Clean room specifications

* Always indicate "Manifold specifications" (page 410).

Type	
Block manifold	Discrete valve block
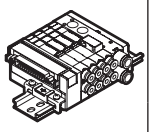	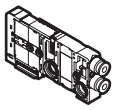

· For model No. of the cable with D sub-connector, refer to page 390.

Code		Content		Block manifold	Discrete valve block
Ⓐ Valve					
3		3-port valve or two 3-port valves integrated		●	●
4		4-port valve or 3, 4-port valve mix		●	●
Ⓑ Solenoid position (*10)					
1	3-port valve	Single NC self reset	(differential pressure spring return)	●	●
11	3-port valve	Single NO self reset	(differential pressure spring return)	●	●
2	3-port valve	Double NC self holding		●	●
21	3-port valve	Double NO self holding		●	●
66	Dual 3-port valve integrated (*1)	A side valve: NC self reset	(differential pressure return)	●	●
66S	Dual 3-port valve integrated (*1)	B side valve: NC self reset	(differential pressure spring return)	●	●
67	Dual 3-port valve integrated (*1)	A side valve: NC self reset	(differential pressure return)	●	●
67S	Dual 3-port valve integrated (*1)	B side valve: NO self reset	(differential pressure spring return)	●	●
76	Dual 3-port valve integrated (*1)	A side valve: NO self reset	(differential pressure return)	●	●
76S	Dual 3-port valve integrated (*1)	B side valve: NC self reset	(differential pressure spring return)	●	●
77	Dual 3-port valve integrated (*1)	A side valve: NO self reset	(differential pressure return)	●	●
77S	Dual 3-port valve integrated (*1)	B side valve: NO self reset	(differential pressure spring return)	●	●
1	4-port valve	2-position single self reset	(differential pressure spring return)	●	●
2	4-port valve	2-position double self hold		●	●
8		Mixed manifold		●	
Ⓒ Port size					
C18		ø1.8 push-in fitting, Lateral (applicable tube UP-9402-**)		●	●
CL18		ø1.8 push-in fitting, Facing up (applicable tube UP-9402-**)		●	●
C3		ø3 push-in fitting, Lateral		●	●
CL3		ø3 push-in fitting, Facing up		●	●
C4		ø4 push-in fitting, Lateral		●	●
CL4		ø4 push-in fitting, Facing up		●	●
M3		M3 female thread (with non-rotation)		●	●
CX		Mix push-in fitting (*10)		●	
C3N		ø1/8" push-in fitting, Lateral		●	●
CL3N		ø1/8" push-in fitting, Facing up		●	●
C4N		ø5/32" push-in fitting, Lateral		●	●
CL4N		ø5/32" push-in fitting, Facing up		●	●
CXN		Mix push-in fitting (*10)		●	
Ⓓ Manual operating device					
Blank		Non-locking/locking common (with manual cover)		●	●
M		Manual override for non-locking (with manual cover)		●	●
Ⓔ Wiring method					
Refer to the following page about wiring method.				●	
Ⓕ Terminal and connector pin wiring					
Blank		Standard wiring		●	●
W		Double wiring (*2, 3)		●	●
Ⓖ Option					
Blank		None		●	●
E		Low-heat and energy saving circuit (*4, 5)		●	●
F		Port A/B filter integrated (*6)		●	●
Ⓗ Station No.					(*9)
1		1 station		●	
to		to			
24		24 stations (*7)			
Ⓘ Voltage					
3		24 VDC		●	●
4		12 VDC		●	●

⚠ Precautions for model No. selection

*1: The type with two 3-port valves integrated cannot be used with the external pilot. Contact CKD for other working conditions.

***2: Check the connector pin layout (example) given on pages 389 to 396 for the double wiring specifications.** When ordering a single valve block, the double wiring designation is limited to the 2-position single solenoid for the 4-port valve, and the 3-port valve.

*3: Double wiring is not available for discrete individual wiring valve block.

*4: Energizing is limited to the plus common.

*5: Individual wiring is not available for low exoergic/energy-saving circuit.

*6: A filter (for preventing entry of foreign matter) is incorporated in the supply/ exhaust block's P port.

***7: This differs based on the specifications. Refer to page 344.**

***8: For specifications of the self reset, refer to the precautions on page 412.** To include a dummy block, select mix manifold.

*9: A dummy block is counted in the station No.

*10: A mix of metric fittings, M3 female threads, and inch fittings cannot be selected.

(Wiring method list)

Code	Content		Type: Block manifold	Type: Discrete valve block
			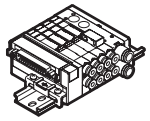	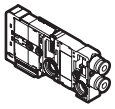
Ⓔ Wiring method				
T30(N)	25 pin D sub-connector, left		●	
T30(N)R	25 pin D sub-connector, right		●	
T50	20 pin flat cable connector, left (with power supply terminal) (*11)		●	
T50R	20 pin flat cable connector, right (with power supply terminal) (*11)		●	
T51	20 pin flat cable connector, left		●	
T51R	20 pin flat cable connector, right		●	
T52	10 pin flat cable connector, left		●	
T52R	10 pin flat cable connector, right		●	
T53	26 pin flat cable connector, left		●	
T53R	26 pin flat cable connector, right		●	
TM1A	Intermediate wiring block	RITS connector 6P × 2 (*12)	●	
TM1C	Intermediate wiring block	RITS connector 6P (*12)	●	
TM52	Intermediate wiring block	10 pin flat cable connector	●	
TX	Electrical block mix (*13, 14, 15)		●	
Blank	Valve block for reduced wiring			●
D2	Individual wiring	D connector 300 mm	●	●
D20	Individual wiring	D connector 500 mm	●	●
D21	Individual wiring	D connector 1000 mm	●	●
D22	Individual wiring	D connector 2000 mm	●	●
D23	Individual wiring	D connector 3000 mm	●	●
D2N	Individual wiring	D connector without socket	●	●
D3	Individual wiring	D connector with socket/terminal	●	●

*11: T50 and T50R with power supply terminal can be combined only with T50R and T50 respectively.
*12:RITS connector 6P (1473562-6) Tyco Electronics Japan G.K.
*13: Request 2 pcs in the manifold specifications sheet.Contact CKD for 3 pcs. or more.
*14: Individual wiring is not available for the TX wiring method.
*15: When selecting TX wiring method, the max. station No. is 24.
* Individual wiring: Individual wiring specification is available with valve blocks designated for it.

Ozone specifications

Ozone-proof specifications are available as standard.

Manifold components explanation and parts list

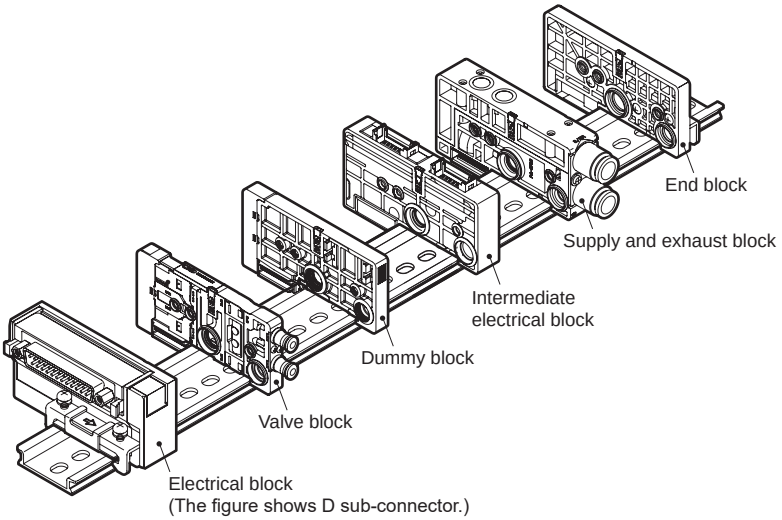

Example of main component model No.

(Refer to pages 378 to 387 for details.)

Parts name	Model No. (example)	Parts name	Model No. (example)
Electrical block	N4E0-T30-P70	Intermediate wiring block	N4E0-TM1A-P70
Valve block	N4E0020-C3-3-P70	Supply and exhaust block	N4E0-Q-8-P70
Dummy block	N4E0-MPD-P70	End block	N4E0-ER-P70

Related parts list

Parts name	Model No. (example)	Parts name	Model No. (example)
Cartridge push-in fitting and related parts	N4E00-JOINT-C18-P70	Cartridge push-in fitting and related parts	N4E00-JOINT-CPG-P70
	N4E00-JOINT-C3-P70		
	N4E00-JOINT-C4-P70		
	N4E00-JOINT-CL18-P70		
	N4E00-JOINT-CL3-P70		
	N4E00-JOINT-CL4-P70		
	N4E00-JOINT-C3N-P70		
	N4E00-JOINT-C4N-P70		
	N4E00-JOINT-CL3N-P70		
	N4E00-JOINT-CL4N-P70		

MEMO

How to order manifold Serial transmission

* Refer to page 346 for details on D sub-connector/flat cable connector.

● Discrete valve block

N 3 E00 1 0 - C3 - M D2 W EF —— 3 - P70

● Block manifold

MN 4 E00 1 0 - C3 - M T6G1 D2 E - 5 - 3 - P70

- MN: DIN rail mount
- Ⓐ Valve
- Ⓑ Solenoid position
- Ⓒ Port size
- Ⓓ Manual operating device
- Ⓔ Wiring method (serial transmission)
- Individual wiring
- Ⓕ Terminal and connector pin wiring
- Ⓖ Option
- Ⓗ Station No.
- Ⓘ Voltage
- Clean room specifications

* Always indicate "Manifold specifications" (page 410).

Code	Content	Type: Block manifold	Type: Discrete valve block
Ⓐ Valve			
3	3-port valve or two 3-port valves integrated	●	●
4	4-port valve or 3, 4-port valve mix	●	●
Ⓑ Solenoid position (*10)			
1	3-port valve: Single NC self reset (differential pressure spring return)	●	●
11	3-port valve: Single NO self reset (differential pressure spring return)	●	●
2	3-port valve: Double NC self holding	●	●
21	3-port valve: Double NO self holding	●	●
66	Dual 3-port valve integrated (*1): A side valve: NC self reset (differential pressure return)	●	●
66S	Dual 3-port valve integrated (*1): B side valve: NC self reset (differential pressure spring return)	●	●
67	Dual 3-port valve integrated (*1): A side valve: NC self reset (differential pressure return)	●	●
67S	Dual 3-port valve integrated (*1): B side valve: NO self reset (differential pressure spring return)	●	●
76	Dual 3-port valve integrated (*1): A side valve: NO self reset (differential pressure return)	●	●
76S	Dual 3-port valve integrated (*1): B side valve: NC self reset (differential pressure spring return)	●	●
77	Dual 3-port valve integrated (*1): A side valve: NO self reset (differential pressure return)	●	●
77S	Dual 3-port valve integrated (*1): B side valve: NO self reset (differential pressure spring return)	●	●
1	4-port valve: 2-position single self reset (differential pressure spring return)	●	●
2	4-port valve: 2-position double self hold	●	●
8	Mixed manifold	●	
Ⓒ Port size			
C18	ø1.8 push-in fitting, Lateral (applicable tube UP-9402-**)	●	●
CL18	ø1.8 push-in fitting, Facing up (applicable tube UP-9402-**)	●	●
C3	ø3 push-in fitting, Lateral	●	●
CL3	ø3 push-in fitting, Facing up	●	●
C4	ø4 push-in fitting, Lateral	●	●
CL4	ø4 push-in fitting, Facing up	●	●
M3	M3 female thread (with non-rotation)	●	●
CX	Mix push-in fitting (*10)	●	
C3N	ø1/8" push-in fitting, Lateral	●	●
CL3N	ø1/8" push-in fitting, Facing up	●	●
C4N	ø5/32" push-in fitting, Lateral	●	●
CL4N	ø5/32" push-in fitting, Facing up	●	●
CXN	Mix push-in fitting (*10)	●	
Ⓓ Manual operating device			
Blank	Non-locking/locking common (with manual cover)	●	●
M	Manual override for non-locking (with manual cover)	●	●
Ⓔ Wiring method			
Refer to the following page about wiring method.		●	
Ⓕ Terminal and connector pin wiring			
Blank	Standard wiring	●	●
W	Double wiring (*2, 3)	●	●
Ⓖ Option			
Blank	None	●	●
E	Low-heat and energy saving circuit (*4, 5)	●	●
F	Port A/B filter integrated (*6)	●	●
Ⓗ Station No.			(*11)
1	1 station	●	
to	to		
32	32 stations (*7)		
Ⓘ Voltage			
3	24 VDC	●	●

⚠ Precautions for model No. selection

*1: The type with two 3-port valves integrated cannot be used with the external pilot. Contact CKD for other working conditions.

***2: Check the connector pin layout (example) given on pages 399 to 403 for the double wiring specifications.** When ordering a single valve block, the double wiring designation is limited to the 2-position single solenoid for the 4-port valve, and the 3-port valve.

*3: Double wiring is not available for a single unit of individual wiring valve block.

*4: Energizing is limited to the plus common.

*5: For a type of unit with a low-heat-generating/power-saving circuit built-in, individual wiring cannot be selected.

*6: A filter (for preventing entry of foreign matter) is incorporated in the supply/exhaust block's P port.

***7: This differs depending on the specifications. Refer to page 344.**

***8: For specifications of the self reset, refer to the precautions on page 412.** To include a dummy block, select mix manifold.

*9: A dummy block is counted in the station No.

*10: The combination of metric and inch fittings is not available.

(Wiring method list)

Code		Content	Type: Block manifold	Type: Discrete valve block
			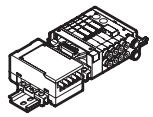	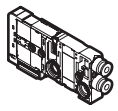
Ⓔ Wiring method				
T6G1		CC-Link 16 points	●	
T7D1		Close contact type DeviceNet 16 points	●	
T7D2		Close contact type DeviceNet 32 points	●	
T7G1		Close contact type CC-Link 16 points	●	
T7G2		Close contact type CC-Link 32 points	●	
T7N1		Close contact type S-LINK V 16 points	●	
T7N2		Close contact type S-LINK V 32 points	●	
T7EC1		Close contact EtherCAT 16 points (port side leadout)	●	
T7EC2		Close contact EtherCAT 32 points (port side leadout)	●	
T7ECT1		Close contact EtherCAT 16 points (wiring side leadout)	●	
T7ECT2		Close contact EtherCAT 32 points (wiring side leadout)	●	
T7EN1		Close contact EtherNet/IP 16 points	●	
T7EN2		Close contact EtherNet/IP 32 points	●	
Blank		Valve block for reduced wiring		●
D2	Individual wiring	D type connector 300 mm	●	●
D20	Individual wiring	D type connector 500 mm	●	●
D21	Individual wiring	D type connector 1000 mm	●	●
D22	Individual wiring	D type connector 2000 mm	●	●
D23	Individual wiring	D type connector 3000 mm	●	●
D2N	Individual wiring	D type connector without socket	●	●
D3	Individual wiring	D type connector with socket/terminal	●	●

Ozone specifications

Ozone-proof specifications are available as standard.

Manifold components explanation and parts list

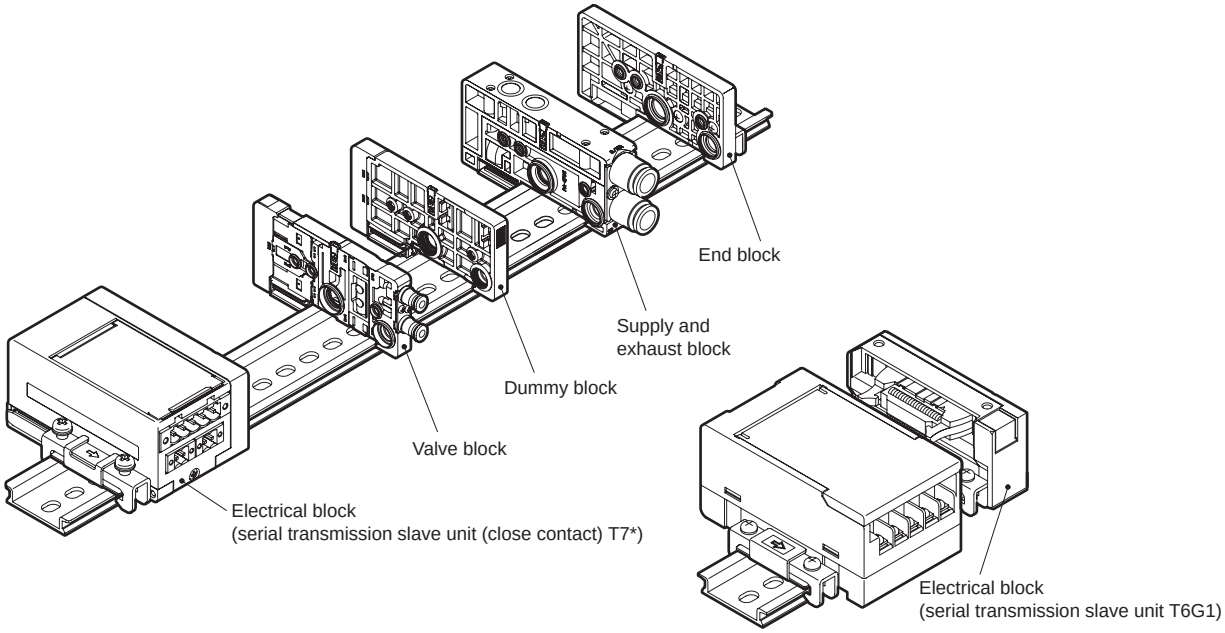

Example of main component model No.

(Refer to pages 378 to 387 for details.)

Parts name	Model No. (example)	Parts name	Model No. (example)
Electrical block	N4E0-T7G2-P70	Supply and exhaust block	N4E0-Q-8-P70
Valve block	N4E0020-C3-3-P70	End block	N4E0-ER-P70
Dummy block	N4E0-MPD-P70		

Related parts list

Parts name	Model No. (example)	Parts name	Model No. (example)
Cartridge push-in fitting and related parts	N4E00-JOINT-C18-P70	Cartridge push-in fitting and related parts	N4E00-JOINT-CPG-P70
	N4E00-JOINT-C3-P70		
	N4E00-JOINT-C4-P70		
	N4E00-JOINT-CL18-P70		
	N4E00-JOINT-CL3-P70		
	N4E00-JOINT-CL4-P70		
	N4E00-JOINT-C3N-P70		
	N4E00-JOINT-C4N-P70		
	N4E00-JOINT-CL3N-P70		
	N4E00-JOINT-CL4N-P70		

MEMO

Dimensions

MN$^{3}_{4}$E00*-*-T30(N)*-*-*-P70

● D-sub-connector left side type (T30 (N))

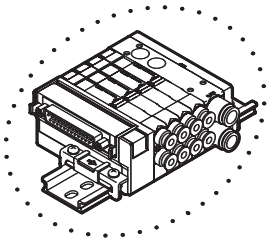

* D sub-connector can be faced up or down.
* For how to switch the connector direction, refer to page 359.

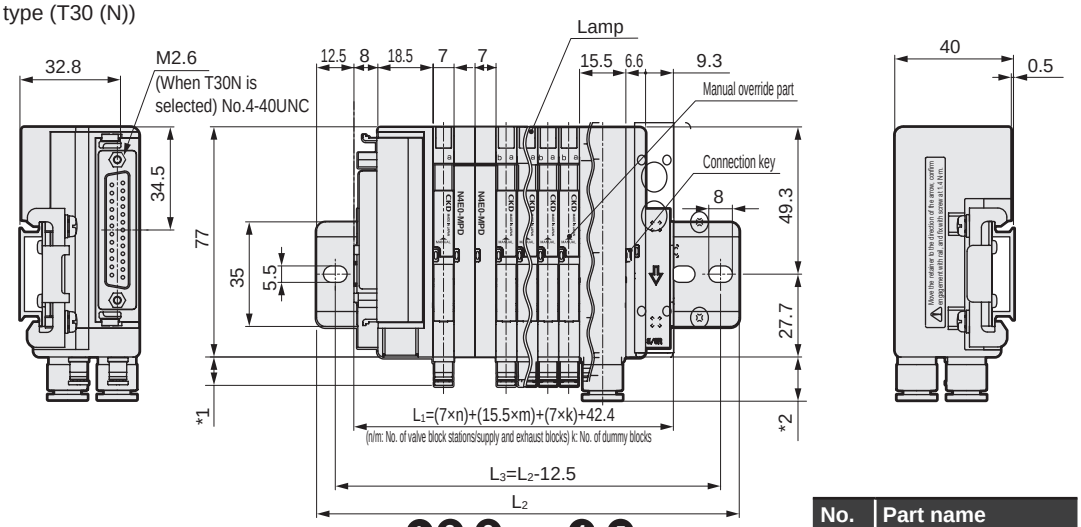

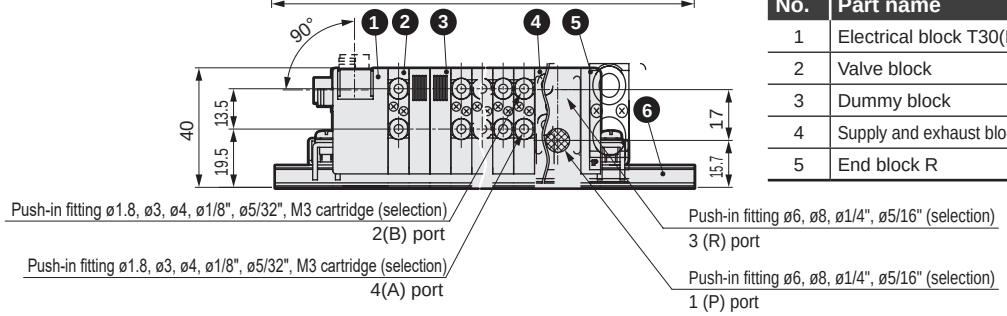

(*1) Valve block Fitting dimensions		
Push-in fitting	ø1.8	6.8
	ø3	9.5
	ø4	11.9
	ø1/8"	12.2
	ø5/32"	11.9
M3 female thread		6.1

(*2) Supply and exhaust block fitting dimensions	
ø6	14
ø8	14.8
ø1/4"	15.1
ø5/16"	15.3

No.	Part name
1	Electrical block T30(N)
2	Valve block
3	Dummy block
4	Supply and exhaust block
5	End block R

* For dimensions of the radial push-in fitting (Facing up) for valve block and for supply and exhaust block, refer to page 349.

MN$^{3}_{4}$E00*-*-T30(N)R*-*-*-P70

● D sub-connector, right (T30(N)R)

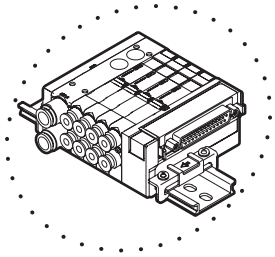

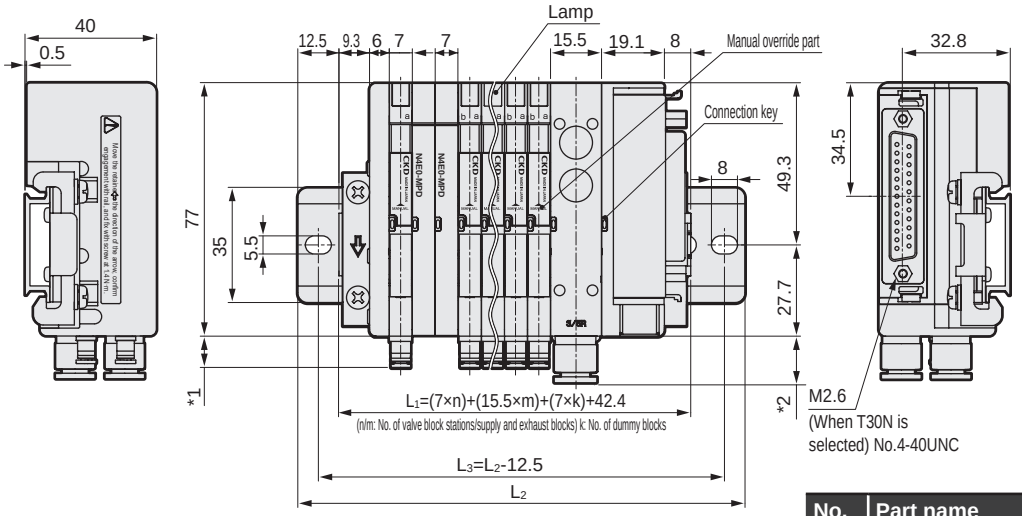

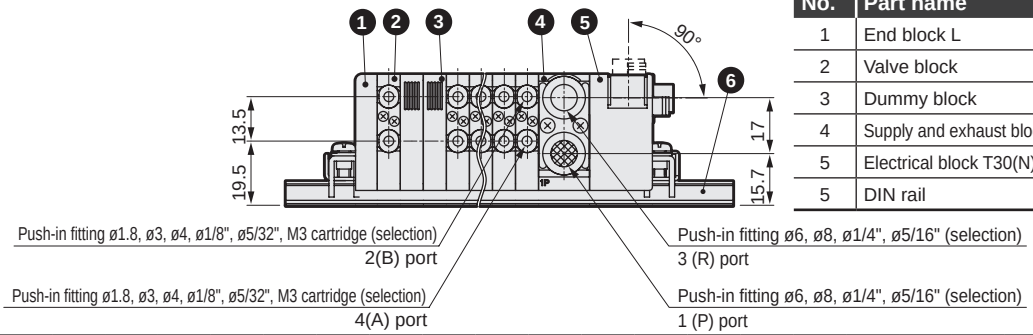

(*1) Valve block Fitting dimensions		
Push-in fitting	ø1.8	6.8
	ø3	9.5
	ø4	11.9
	ø1/8"	12.2
	ø5/32"	11.9
M3 female thread		6.1

(*2) Supply and exhaust block fitting dimensions	
ø6	14
ø8	14.8
ø1/4"	15.1
ø5/16"	15.3

No.	Part name
1	End block L
2	Valve block
3	Dummy block
4	Supply and exhaust block
5	Electrical block T30(N)R
5	DIN rail

Manifold length L1 mm	76.2 or less	88.7 or less	101.2 or less	113.7 or less	126.2 or less	138.7 or less	151.2 or less	163.7 or less	176.2 or less	188.7 or less	201.2 or less	213.7 or less	226.2 or less	238.7 or less	251.2 or less	263.7 or less	276.2 or less	288.7 or less	301.2 or less	313.7 or less	326.2 or less	338.7 or less	351.2 or less
Mounting rail length L2 mm	100	112.5	125	137.5	150	162.5	175	187.5	200	212.5	225	237.5	250	262.5	275	287.5	300	312.5	325	337.5	350	362.5	375
Mounting rail pitch L3 mm	87.5	100	112.5	125	137.5	150	162.5	175	187.5	200	212.5	225	237.5	250	262.5	275	287.5	300	312.5	325	337.5	350	362.5

Dimensions

MN$^{3}_{4}$E00*-*-T50*-*-*-P70

● Flat cable connector, left (T50)

*** T51, T52 and T53 are also available. Dimensions are same as those of T50. *3 Refer to the connector dimensions.**

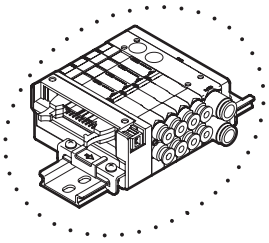

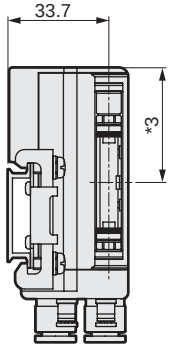

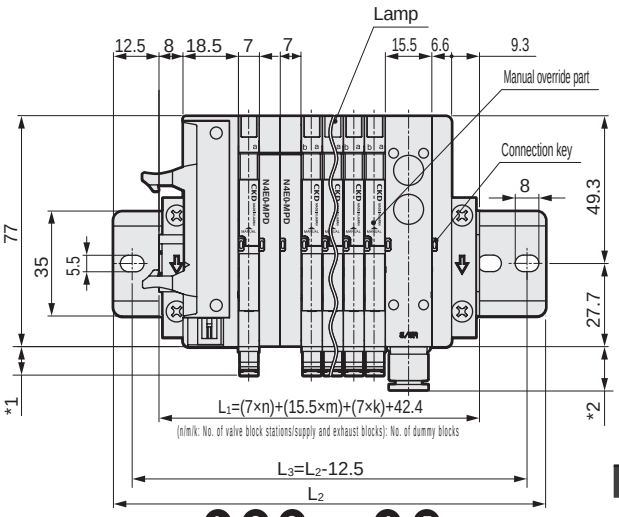

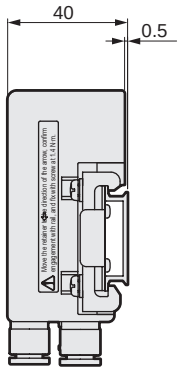

(*1) Valve block Fitting dimensions		
Push-in fitting	ø1.8	6.8
	ø3	9.5
	ø4	11.9
	ø1/8"	12.2
	ø5/32"	11.9
M3 female thread		6.1

(*2) Connector dimensions	
T50	38.3
T51	
T52	32.0
T53	34.5

(*2) Supply and exhaust block fitting dimensions	
ø6	14
ø8	14.8
ø1/4"	15.1
ø5/16"	15.3

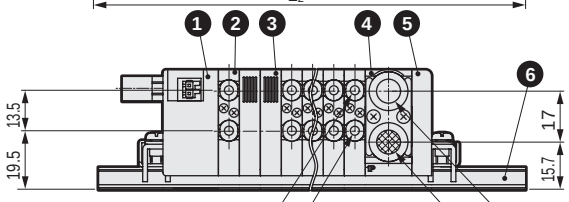

Push-in fitting ø1.8, ø3, ø4, ø1/8", ø5/32", M3 cartridge (selection)
2(B) port

Push-in fitting ø1.8, ø3, ø4, ø1/8", ø5/32", M3 cartridge (selection)
4(A) port

Push-in fitting ø6, ø8, ø1/4", ø5/16" (selection)
3 (R) port

Push-in fitting ø6, ø8, ø1/4", ø5/16" (selection)
1 (P) port

No.	Part name
1	Electrical block T50
2	Valve block
3	Dummy block5
4	Supply and exhaust block
5	End block R
6	DIN rail

*** For dimensions of the radial push-in fitting (Facing up) for valve block and for supply and exhaust block, refer to page 359.**

*** A power feed connector can be used with T50 to supply power to the PLC output unit. Refer to page 359 for how to connect the connector and refer to the wiring precautions on page 391 for how to wire.**

MN$^{3}_{4}$E00*-*-T50R*-*-*-P70

● Flat cable connector, right (T50R)

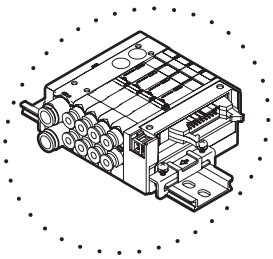

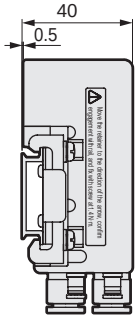

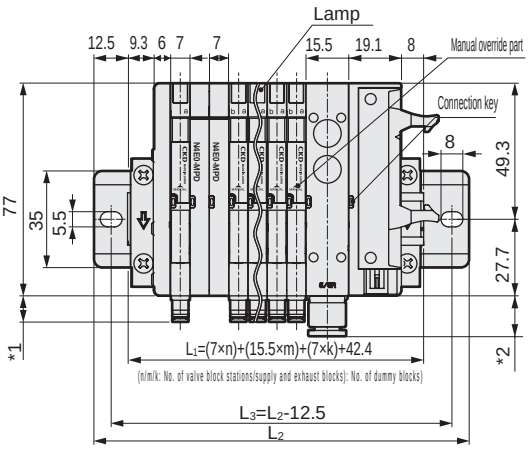

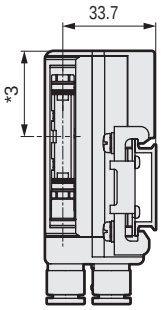

(*1) Valve block Fitting dimensions		
Push-in fitting	ø1.8	6.8
	ø3	9.5
	ø4	11.9
	ø1/8"	12.2
	ø5/32"	11.9
M3 female thread		6.1

(*2) Connector dimensions	
T50R	30.7
T51R	
T52R	37.1
T53R	34.5

(*2) Supply and exhaust block fitting dimensions	
ø6	14
ø8	14.8
ø1/4"	15.1
ø5/16"	15.3

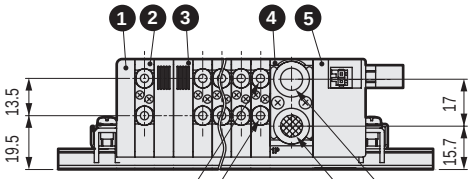

Push-in fitting ø1.8, ø3, ø4, ø1/8", ø5/32", M3 cartridge (selection)
2(B) port

Push-in fitting ø1.8, ø3, ø4, ø1/8", ø5/32", M3 cartridge (selection)
4(A) port

Push-in fitting ø6, ø8, ø1/4", ø5/16" (selection)
3 (R) port

Push-in fitting ø6, ø8, ø1/4", ø5/16" (selection)
1 (P) port

No.	Part name
1	End block L
2	Valve block
3	Dummy block
4	Supply and exhaust block
5	Electrical block T50R
6	DIN rail

Manifold length L1 mm	76.2 or less	88.7 or less	101.2 or less	113.7 or less	126.2 or less	138.7 or less	151.2 or less	163.7 or less	176.2 or less	188.7 or less	201.2 or less	213.7 or less	226.2 or less	238.7 or less	251.2 or less	263.7 or less	276.2 or less	288.7 or less	301.2 or less	313.7 or less	326.2 or less	338.7 or less	351.2 or less
Mounting rail length L2 mm	100	112.5	125	137.5	150	162.5	175	187.5	200	212.5	225	237.5	250	262.5	275	287.5	300	312.5	325	337.5	350	362.5	375
Mounting rail pitch L3 mm	87.5	100	112.5	125	137.5	150	162.5	175	187.5	200	212.5	225	237.5	250	262.5	275	287.5	300	312.5	325	337.5	350	362.5

Dimensions

MN$^{3}_{4}$E00*-*-TM1$^{A}_{C}$ *-*-*-P70

● RITS connector, intermediate wiring (TM1$^{A}_{C}$)

MN$^{3}_{4}$E00*-*-TM52*-*-*-P70

● 10 pin flat cable connector, intermediate wiring (TM52)

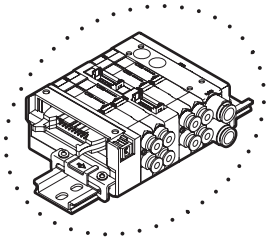

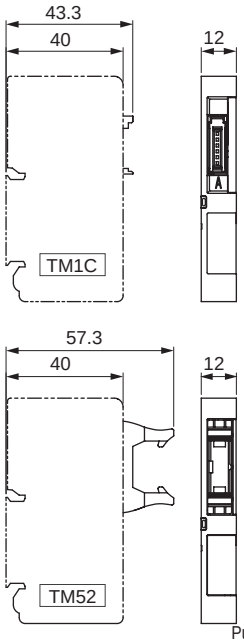

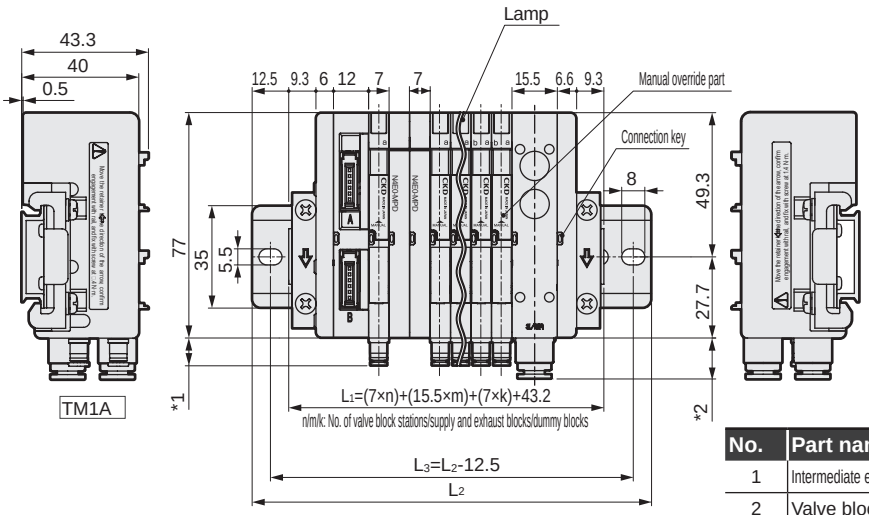

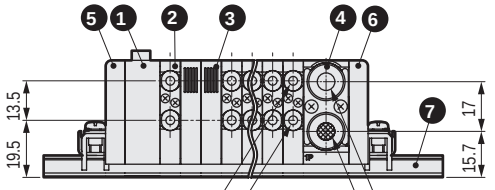

No.	Part name
1	Intermediate electrical block TM1A
2	Valve block
3	Dummy block
4	Supply and exhaust block
5	End block L
6	End block R
7	DIN rail

(*1) Valve block Fitting dimensions		
Push-in fitting	ø1.8	6.8
	ø3	9.5
	ø4	11.9
	ø1/8"	12.2
	ø5/32"	11.9
M3 female thread		6.1

(*2) Supply and exhaust block fitting dimensions	
ø6	14
ø8	14.8
ø1/4"	15.1
ø5/16"	15.3

Manifold length L1 mm	76.2 or less	88.7 or less	101.2 or less	113.7 or less	126.2 or less	138.7 or less	151.2 or less	163.7 or less	176.2 or less	188.7 or less	201.2 or less	213.7 or less	226.2 or less	238.7 or less	251.2 or less	263.7 or less	276.2 or less	288.7 or less	301.2 or less	313.7 or less	326.2 or less	338.7 or less	351.2 or less
Mounting rail length L2 mm	100	112.5	125	137.5	150	162.5	175	187.5	200	212.5	225	237.5	250	262.5	275	287.5	300	312.5	325	337.5	350	362.5	375
Mounting rail pitch L3 mm	87.5	100	112.5	125	137.5	150	162.5	175	187.5	200	212.5	225	237.5	250	262.5	275	287.5	300	312.5	325	337.5	350	362.5

Dimensions

MN$^{3}_{4}$E00*-*-T6G1-*-*-P70

● Serial transmission (T6G1)

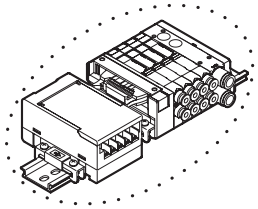

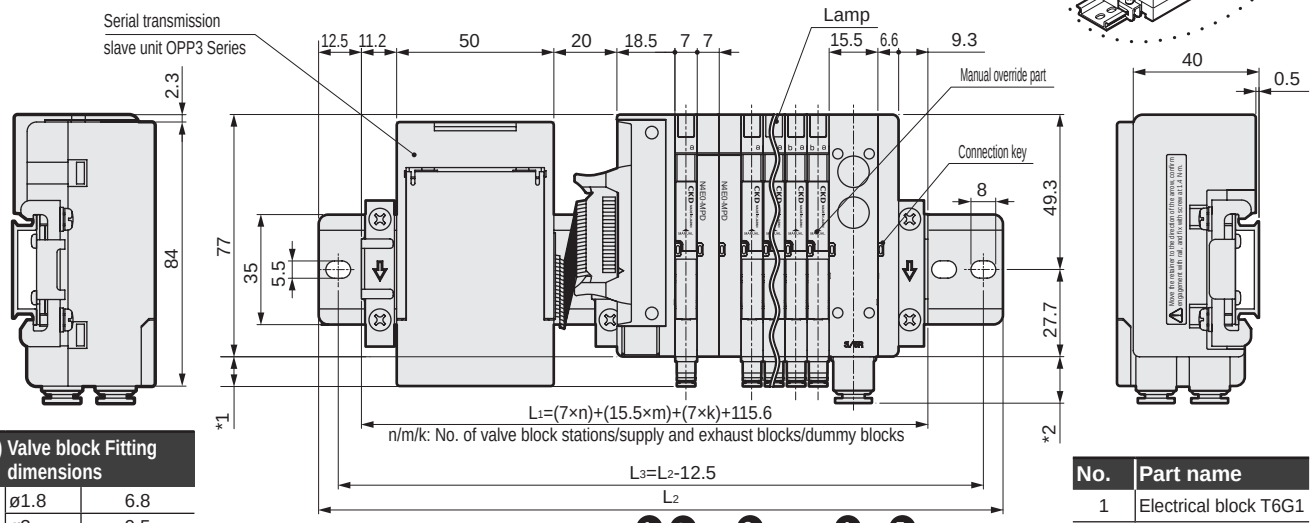

(*1) Valve block Fitting dimensions		
Push-in fitting	ø1.8	6.8
	ø3	9.5
	ø4	11.9
	ø1/8"	12.2
	ø5/32"	11.9
M3 female thread		6.1

*2 Supply and exhaust block fitting dimensions	
ø6	14
ø8	14.8
ø1/4"	15.1
ø5/16"	15.3

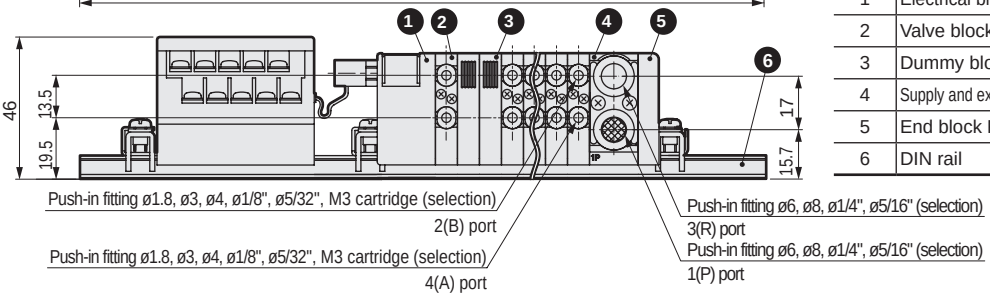

No.	Part name
1	Electrical block T6G1
2	Valve block
3	Dummy block
4	Supply and exhaust block
5	End block R
6	DIN rail

MN$^{3}_{4}$E00*-*-T7**-*-*-P70

● Serial transmission (close contact) (T7*)

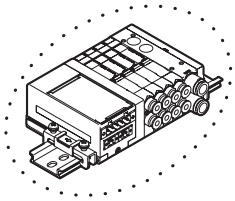

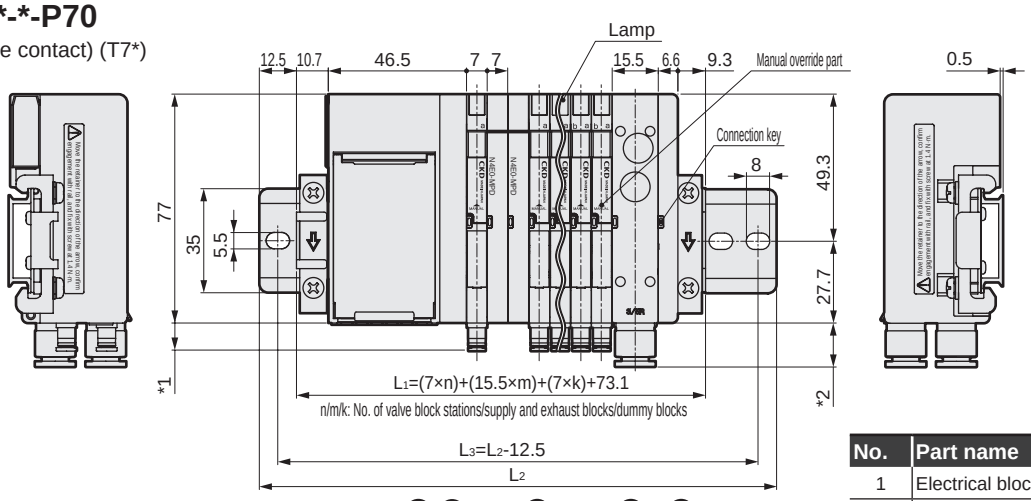

(*1) Valve block Fitting dimensions		
Push-in fitting	ø1.8	6.8
	ø3	9.5
	ø4	11.9
	ø1/8"	12.2
	ø5/32"	11.9
M3 female thread		6.1

(*2) Supply and exhaust block fitting dimensions	
ø6	14
ø8	14.8
ø1/4"	15.1
ø5/16"	15.3

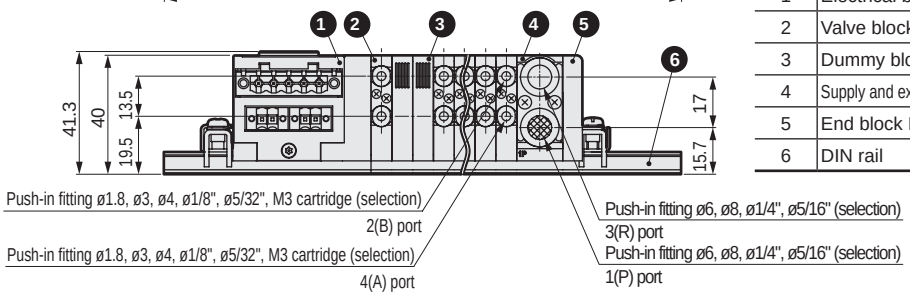

No.	Part name
1	Electrical block T7*
2	Valve block
3	Dummy block
4	Supply and exhaust block
5	End block R
6	DIN rail

* For dimensions of the radial push-in fitting (Facing up) for valve block and for supply and exhaust block, refer to page 359.

Manifold length L1 mm	76.2 or less	88.7 or less	101.2 or less	113.7 or less	126.2 or less	138.7 or less	151.2 or less	163.7 or less	176.2 or less	188.7 or less	201.2 or less	213.7 or less	226.2 or less	238.7 or less	251.2 or less	263.7 or less	276.2 or less	288.7 or less	301.2 or less	313.7 or less	326.2 or less	338.7 or less	351.2 or less
Mounting rail length L2 mm	100	112.5	125	137.5	150	162.5	175	187.5	200	212.5	225	237.5	250	262.5	275	287.5	300	312.5	325	337.5	350	362.5	375
Mounting rail pitch L3 mm	87.5	100	112.5	125	137.5	150	162.5	175	187.5	200	212.5	225	237.5	250	262.5	275	287.5	300	312.5	325	337.5	350	362.5

SCPD3
SCM
SSD2
MDC2
SMG
LCM
LCR
LCG
LCX
STM
STG
STR2
MRL2
GRC
Cylinder switch
MN3E MN4E
4GA/B
M4GA/B
MN4GA/B
F.R (module unit)
Clean F.R
Precision R
Press gauge Diff. press gauge
Electro-pneumatic R
Speed controller
Auxiliary valve
Fitting/ tube
Clean air unit
Pressure sensor
Flow rate sensor
Valve for air blow
Ending

Dimensions

MN$^{3}_{4}$E00*-*- T7**-*-*P70

● Serial transmission (T7EC□□)

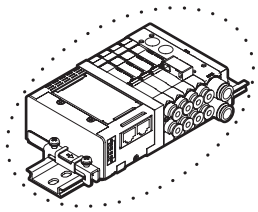

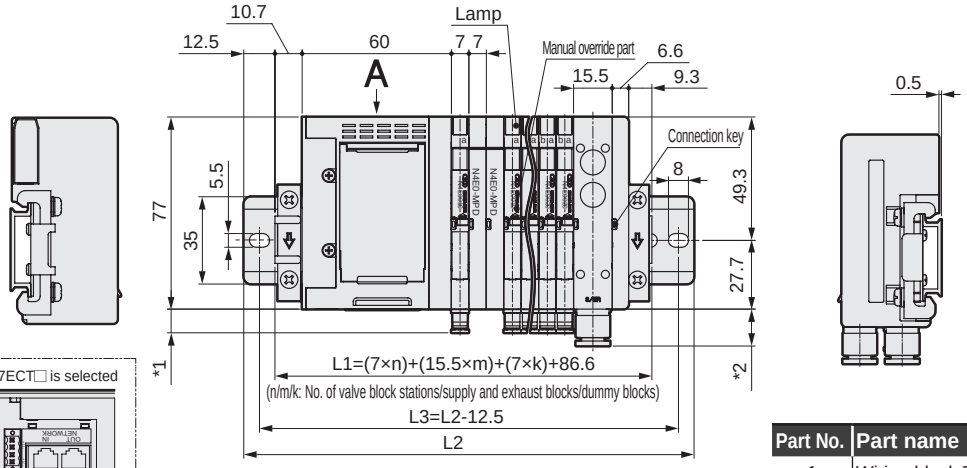

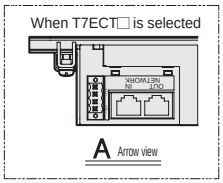

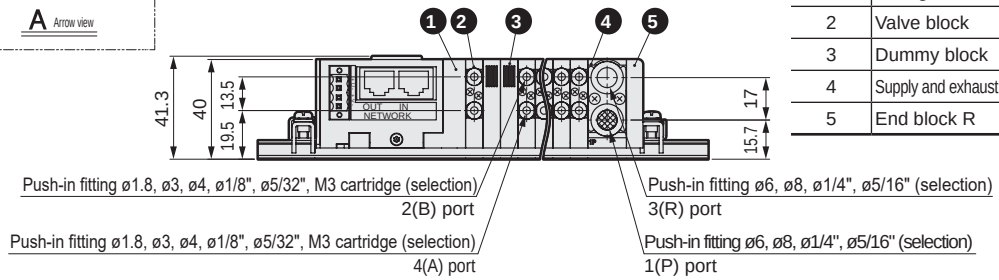

(*1) Valve block fitting dimensions		
Push-in fitting	ø1.8	6.8
	ø3	9.5
	ø4	11.9
	ø1/8"	12.2
	ø5/32"	11.9
M3 Female thread		6.1

(*2) Supply and exhaust block fitting dimensions	
ø6	14
ø8	14.8
ø1/4"	15.1
ø5/16"	15.3

Part No.	Part name
1	Wiring block T7*
2	Valve block
3	Dummy block
4	Supply and exhaust block
5	End block R

MN$^{3}_{4}$E00*-*-(D2 to D3)-*-*-P70

● Individual wiring connector (D2/D20/D21/D22/D23/D2N/D3)

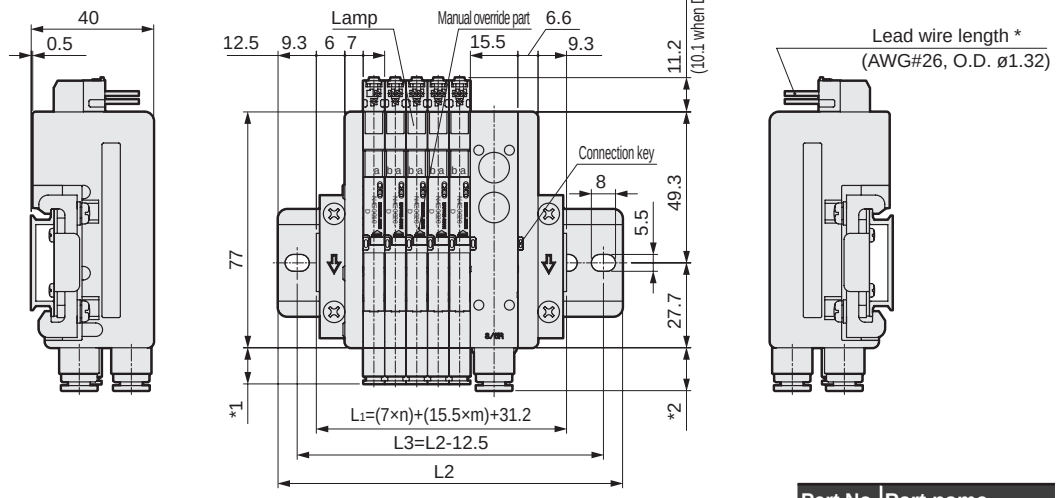

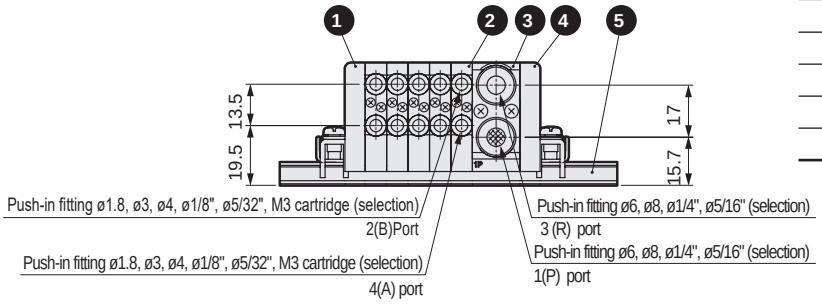

(*1) Valve block fitting dimensions		
Push-in fitting	ø1.8	6.8
	ø3	9.5
	ø4	11.9
	ø1/8"	12.2
	ø5/32"	11.9
M3 female thread		6.1

(*2) Supply and exhaust block fitting dimensions	
ø6	14
ø8	14.8
ø1/4"	15.1
ø5/16"	15.3

Part No.	Part name
1	End block L
2	Valve block
3	Supply and exhaust block
4	End block R
5	DIN rail

Manifold length L1 mm	63.7 or less	76.2 or less	88.7 or less	101.2 or less	113.7 or less	126.2 or less	138.7 or less	151.2 or less	163.7 or less	176.2 or less	188.7 or less	201.2 or less	213.7 or less	226.2 or less	238.7 or less	251.2 or less	263.7 or less	276.2 or less	288.7 or less	301.2 or less	313.7 or less	326.2 or less	338.7 or less	351.2 or less
Mounting rail length L2 mm	87.5	100	112.5	125	137.5	150	162.5	175	187.5	200	212.5	225	237.5	250	262.5	275	287.5	300	312.5	325	337.5	350	362.5	375
Mounting rail pitch L3 mm	75	87.5	100	112.5	125	137.5	150	162.5	175	187.5	200	212.5	225	237.5	250	262.5	275	287.5	300	312.5	325	337.5	350	362.5

Dimensions

● Piping blocks (common for all)

For air fiber

Push-in fitting (Facing up)
● ø1.8 (CL18)

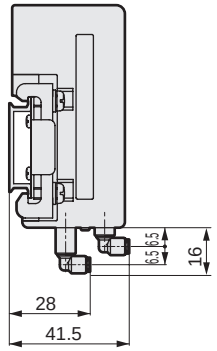

Push-in fitting (Facing up)
● ø3 (CL3)

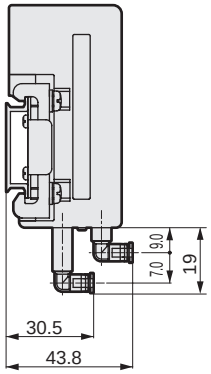

Push-in fitting (Facing up)
● ø4 (CL4)

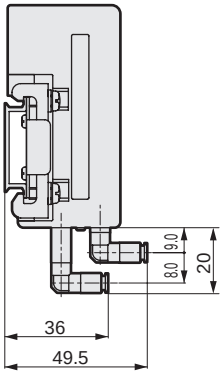

Push-in fitting (Facing up)
● ø1/8" (CL3N)

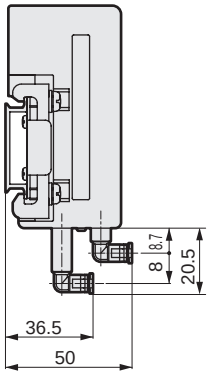

Push-in fitting (Facing up)
● ø5/32"(CL4N)

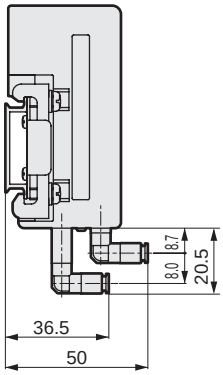

Supply and exhaust block
Radial push-in fitting (upward)
● ø6(CL6)

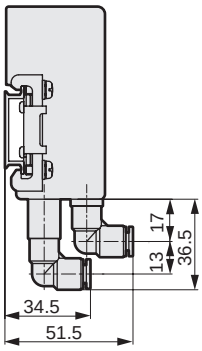

● ø8(CL8)

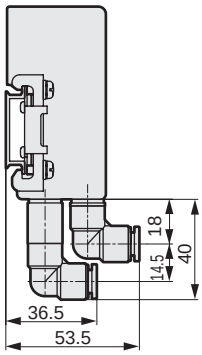

● ø1/4"(CL6N)

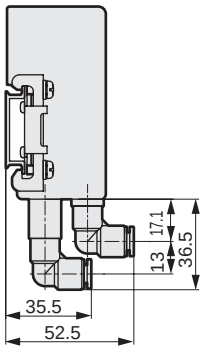

● ø5/16"(CL8N)

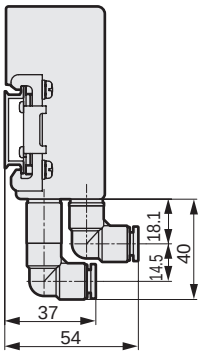

Supply and exhaust block for external pilot

● Upward piping

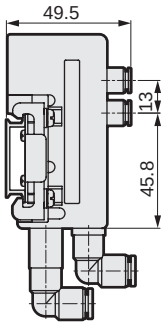

● Lateral piping

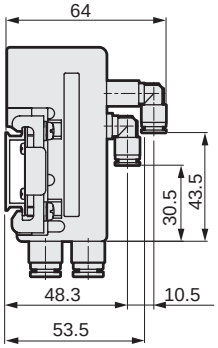

●Upward piping
(inch fitting specifications)

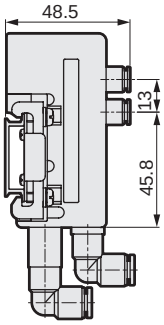

● Lateral piping
(inch fitting specifications)

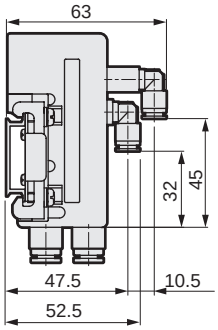

● Dimensions with T50 power supply connector

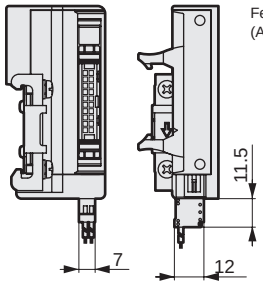

● D-sub-connector (T30 (N)/T30 (N)R): How to switch the connector direction

Usage in a horizontal state

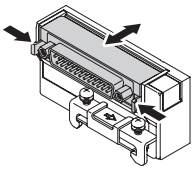

Hold the lever and pull the connector out horizontally. Push in the connector horizontally for storage. (Must be fixed.)

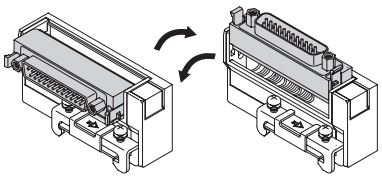

Rotate the connector. Fix the connector in the horizontal or vertical state during use.

Usage in a vertical state

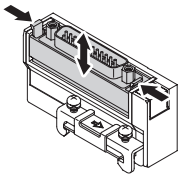

Hold the lever and pull the connector out vertically.Push in the connector horizontally for storage. (Must be fixed.)

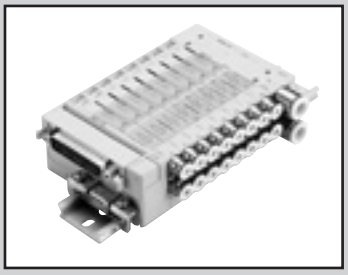

Reduced wiring block manifold
Pilot operated 3, 4-port valve

MN3E0/MN4E0 Series

Structure and material restriction

	Structure	Model No.
P7 Series	Exhaust treatment	– P70

Common specification

Item		Description
Manifold method		Block manifold
Manifold		Common supply/exhaust, check valve integrated *1
Working fluid		Compressed air
Valve and operation		Pilot operated soft spool valve
Max. working pressure	MPa	0.7
Min. working pressure	MPa	0.2
Proof pressure	MPa	1.05
Ambient temperature	°C	5 to 55
Fluid temperature	°C	5 to 55
Lubrication		Not required
Degree of protection		Dust proof
Vibration resistance	m/s^2	50 or less
Shock resistance	m/s^2	300 or less
Atmosphere		Containing corrosive gas is not permissible
Manual operating device		Locking/non-locking common or non-locking

*1: Check valve blocks back pressure from adjacent pneumatic devices, etc., However, the structure does not permit continuous pressure holding, so do not use for purposes other than blocking back pressure.

Electrical specifications

Item			Description
Rated voltage		V	12, 24
Voltage fluctuation range			±10% (using serial transmission +10%, -5%)
Guaranteed current	A	24 VDC	0.025 (0.013) *2
		12 VDC	0.05 (0.025) *2
Power consumption	W	24 VDC	0.6 (0.3) *2
		12 VDC	
Thermal class			B
Surge suppressor			Option
Indicator			LED

*2: As this product has no-lubrication specifications, adding oil may cause leakage of the grease initially sealed in, which may prevent the product from operating at its maximum performance.
*3: Values shown in ( ) are for low exoergic/energy circuit type.As well, when using the valve block with individual power supply function (AUX), type with low exoergic/energy circuit, energizing is limited to the plus common.

Individual specifications

Item \ Port		3-port valve	4-port valve	Dual 3-port valve integrated *1
Port size	A/B port	ø1.8, ø4, ø6 push-in fitting, M5, fiber tube		
	P/R port	ø6, ø8 push-in fitting		
	External pilot port	ø6 push-in fitting		-

*1: The dual 3-port valves integrated type uses the main pressure to operate the valving element, and therefore cannot be used with the external pilot. Check for sufficient supply air flow that the supply pressure does not drop below the min. working pressure due to the operation of the connected load (air operated valve), etc.

Max. number of stations energized by manifold

● T3□/T5□/TM□/T6G1

Item		MN3E0/MN4E0								
		T30(N)	T50	T51	T52	T53	TM1A	TM1C	TM52	T6G1
Max. station No.	Standard wiring	24 stations	16 stations	18 stations	8 stations	24 stations	10 stations	5 stations	8 stations	16 stations
	Double wiring	12 stations	8 stations	9 stations	4 stations	12 stations	5 stations	2 stations	4 stations	8 stations
Max. number of solenoids		24 points	16 points	18 points	8 points	24 points	10 points	5 points	8 points	16 points

● T7□

Item		MN3E0/MN4E0									
		T7D1	T7D2	T7G1	T7G2	T7N1	T7N2	T7EC□1	T7EC□2	T7EN1	T7EN2
Max. station No.	Standard wiring	16 stations	32 stations	16 stations	32 stations	16 stations	32 stations	16 stations	32 stations	16 stations	32 stations
	Double wiring	8 stations	16 stations	8 stations	16 stations	8 stations	16 stations	8 stations	16 stations	8 stations	16 stations
Max. number of solenoids		16 points	32 points	16 points	32 points	16 points	32 points	16 points	32 points	16 points	32 points

Individual specifications/Characteristics

Item \ Port		3-port valve	4-port valve	Dual 3-port valve integrated *2
Response time *1 ms	2-position Single	20 or less	20 or less	12 or less
	Double	12 or less	12 or less	-
	3-position	-	20 or less	-

*1: The response times are values with supply pressure of 0.5 MPa, without lubrication.

Flow characteristics

			C [dm³/(s·bar)]	b
3-port valve	2-position		0.54	0.12
4-port valve	2-position		0.54	0.12
	3-position	All ports closed	0.50	0.08
		A/B/R connection	0.54	0.12
		P/A/B connection	0.50	0.11
Dual 3-port valve integrated	2-position		0.50	0.16

*1: Effective cross-sectional area S and sonic conductance C are converted as S ≈ 5.0 x C.
*2: Value of ø4 push-in fitting

Slave unit specifications

Item		T6G1 (*1)	T7D1 (*2) T7D2	T7G1 (*1) T7G2	T7N1 T7N2	T7EC□1 T7EC□2	T7EN1 T7EN2
Power supply voltage	Unit side	24 VDC ±10%	24 VDC ±10%				
	Valve side	24 VDC +10% -5%	24 VDC +10% -5%				
	Communication side	-	11 to 25 VDC	-			
Current consumption	Unit side	100 mA or less (when all points output ON)	T7D1: 60 mA or less T7D2: 85 mA or less (when all points output ON)	T7G1: 65 mA or less T7G2: 90 mA or less (when all points output ON)	T7N1: 40 mA or less T7N2: 50 mA or less (when all points output ON)	120 mA or less (When all points output ON)	120 mA or less (When all points output ON)
	Valve side	15 mA or less (when all points are OFF)	15 mA or less (when all points are OFF)				
	Communication side	-	50 mA or less	-			
Output points		16 points	T7D1: 16 points T7D2: 32 points	T7G1: 16 points T7G2: 32 points	T7N1: 16 points T7N2: 32 points	T7EC□1: 16 points T7EC□2: 32 points	T7EN1: 16 points T7EN2: 32 points
Occupied number		1 station	T7D1: 2 bytes T7D2: 4 bytes	T7G1: 1 station T7G2: 1 station	T7N1: 16 output points T7N2: 32 output points	T7EC□1: 1 address T7EC□2: 1 address	T7EN1: 1 address T7EN2: 1 address

*1: CC-Link of Ver.1.10
*2: Contact CKD for information on the EDS file. (EDS file: A text file of parameters for communication with a master unit of another company.)

Weight

Electrical block (g)		D sub-connector T30(N)	Flat cable connector T5*	Intermediate electrical block			Serial transmission		
				TM1A	TM1C	TM52	T6G1	T7*	T7E**
		67	59	32	32	34	205	128	145
Supply and exhaust block (g)		Q/QZ	QK	QKZ		QX		QKX	
	Fitting Lateral	64	69	79		56		61	
	Fitting facing up	90	94	98		62		66	
Valve block (g)		2-position single	2-position double	3-position		Dual 3-port valve integrated			
	Fitting Lateral	47.5	52	53.5		52			
	Fitting facing up	54.5	59	60.5		59			
Dummy block (g)		MPS/MPD							
		20							
End block (g)		ER/EL							
		40							
DIN rail (g)		-							
		0.19 g/mm							

How to order manifold D sub/flat cable connector

* Refer to page 366 for Serial transmission.

● Discrete valve block

N 3 E0 66 0 - C4 - M D2 F —— 3 - P70

● Block manifold

M N 4 E0 1 0 - C4 - M T53 D2 W F - 5 - 3 - P70

DIN rail mount
Ⓐ Valve
Ⓑ Solenoid position
Ⓒ Port size
Ⓓ Manual operating device
Ⓔ Wiring method
Individual wiring
Ⓕ Terminal and connector pin wiring
Ⓖ Option
Ⓗ Station No.
Ⓘ Voltage
Clean room specifications

* Always indicate "Manifold specifications" (page 410).

Type	
Block manifold	Discrete valve block
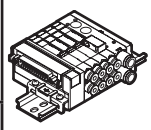	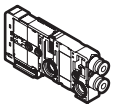

Code	Content		Block manifold	Discrete valve block
Ⓐ Valve				
3	3-port valve or two 3-port valves integrated		●	●
4	4-port valve or 3, 4-port valve mix		●	●
Ⓑ Solenoid position (*8)				
1	3-port valve: Single NC self reset	(differential pressure spring return)	●	●
11	3-port valve: Single NO self reset	(differential pressure spring return)	●	●
2	3-port valve: Double NC self holding		●	●
21	3-port valve: Double NO self holding		●	●
66	Dual 3-port valve integrated (*1): A side valve: NC self reset	(differential pressure return)	●	●
66S	Dual 3-port valve integrated (*1): B side valve: NC self reset	(differential pressure spring return)	●	●
67	Dual 3-port valve integrated (*1): A side valve: NC self reset	(differential pressure return)	●	●
67S	Dual 3-port valve integrated (*1): B side valve: NO self reset	(differential pressure spring return)	●	●
76	Dual 3-port valve integrated (*1): A side valve: NO self reset	(differential pressure return)	●	●
76S	Dual 3-port valve integrated (*1): B side valve: NC self reset	(differential pressure spring return)	●	●
77	Dual 3-port valve integrated (*1): A side valve: NO self reset	(differential pressure return)	●	●
77S	Dual 3-port valve integrated (*1): B side valve: NO self reset	(differential pressure spring return)	●	●
1	4-port valve: 2-position single self reset	(differential pressure spring return)	●	●
2	4-port valve: 2-position double self hold		●	●
3	4-port valve: 3-position all ports closed		●	●
4	4-port valve: 3-position A/B/R connection		●	●
5	4-port valve: 3-position P/A/B connection		●	●
8	Mixed manifold		●	
Ⓒ Port size				
CF	ø1.8 barbed fitting (applicable tube UP-9102-**)		●	●
C18	ø1.8 push-in fitting, Lateral (applicable tube UP-9402-**)		●	●
CL18	ø1.8 push-in fitting, Facing up (applicable tube UP-9402-**)		●	●
C4	ø4 push-in fitting, Lateral		●	●
CL4	ø4 push-in fitting, Facing up		●	●
C6	ø6 push-in fitting, Lateral		●	●
CL6	ø6 push-in fitting, Facing up		●	●
M5	M5 female thread (with non-rotation)		●	●
CX	Mix push-in fitting (*10)		●	●
C3N	ø1/8” push-in fitting, Lateral		●	●
C4N	ø5/32” push-in fitting, Lateral		●	●
CL3N	ø1/8” push-in fitting, Facing up		●	●
CL4N	ø5/32” push-in fitting, Facing up		●	●
CXN	Mix push-in fitting (*10)		●	●
Ⓓ Manual operating device				
Blank	Locking/non-locking common (with manual cover)		●	●
M	Manual override for non-locking (with manual cover)		●	●
Ⓔ Wiring method				
Refer to the following page about wiring method.			●	
Ⓕ Terminal and connector pin wiring				
Blank	Standard wiring		●	●
W	Double wiring (*2, 3)		●	●
Ⓖ Option				
Blank	None		●	●
E	Low-heat and energy saving circuit (*4)		●	●
U	Built-in individual power supply function (AUX) (*4, 5)		●	●
A	Ozone proof		●	●
F	Port A/B filter integrated (*6)		●	●
Ⓗ Station No. (*11)				
1	1 station		●	
to	to			
24	24 stations (*7)			
Ⓘ Voltage				
3	24 VDC		●	●
4	12 VDC		●	●

• For model No. of the cable with D sub-connector, refer to page 390.

⚠ Precautions for model No. selection

*1: The type with two 3-port valves integrated cannot be used with the external pilot.

***2: For double wiring specifications, refer to the connector pin layout (example) on pages 389 to 396.**
When ordering individual valve blocks, the double wiring designation is limited to the 2-position single solenoid for the 3-port valve and to the 2-position single solenoid for the 4-port valve.

*3: Double wiring is not available for a single unit of individual wiring valve block.

*4: Energizing is limited to the plus common. Also "E" and "U" cannot be selected at the same time.

*5: "U" is not available for individual wiring.

*6: A filter (for preventing entry of foreign matter) is incorporated in the supply/ exhaust block's port P.

***7: Differs based on the specifications. Refer to page 360.**

***8: For specifications of the self reset, refer to the precautions on page 412.**
To include a dummy block, select mix manifold.

*9: A dummy block is counted in the station No.

*10: A mix of metric fittings, M5 female threads and inch fittings cannot be selected.

(Wiring method list)

Code		Content	Type: Block manifold	Type: Discrete valve block
			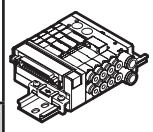	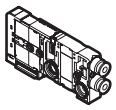
Ⓔ Wiring method				
T30(N)		25 pin D sub-connector, left	●	
T30(N)R		25 pin D sub-connector, right	●	
T50		20 pin flat cable connector, left (with power supply terminal) (*11)	●	
T50R		20 pin flat cable connector, right (with power supply terminal) (*11)	●	
T51		20 pin flat cable connector, left	●	
T51R		20 pin flat cable connector, right	●	
T52		10 pin flat cable connector, left	●	
T52R		10 pin flat cable connector, right	●	
T53		26 pin flat cable connector, left	●	
T53R		26 pin flat cable connector, right	●	
TM1A		Intermediate wiring block RITS connector 6P × 2 (*12)	●	
TM1C		Intermediate wiring block RITS connector 6P (*12)	●	
TM52		Intermediate wiring block 10 pin flat cable connector	●	
TX		Electrical block mix (*13, *14, *15)	●	
Blank		Valve block for reduced wiring		●
D2	Individual wiring	D-connector 300 mm	●	●
D20	Individual wiring	D-connector 500 mm	●	●
D21	Individual wiring	D connector 1000 mm	●	●
D22	Individual wiring	D connector 2000 mm	●	●
D23	Individual wiring	D connector 3000 mm	●	●
D2N	Individual wiring	D connector without socket	●	●
D3	Individual wiring	D connector with socket/terminal	●	●

*11: T50 and T50R with power supply terminal can be combined only with T50R and T50 respectively.
*12:RITS connector 6P (1473562-6) Tyco Electronics Japan G.K.
*13: Request 2 pcs in the manifold specifications sheet.Contact CKD for 3 pcs. or more.
*14: Individual wiring is not available for the TX wiring method.
*15: When selecting TX wiring method, the max. station No. is 24.
* Individual wiring: Individual wiring specification is available with valve blocks designated for it.

Ozone-proof specifications

Can be selected with "How to order" option "A" on pages 362 and 366.

Manifold configuration explanation and parts list

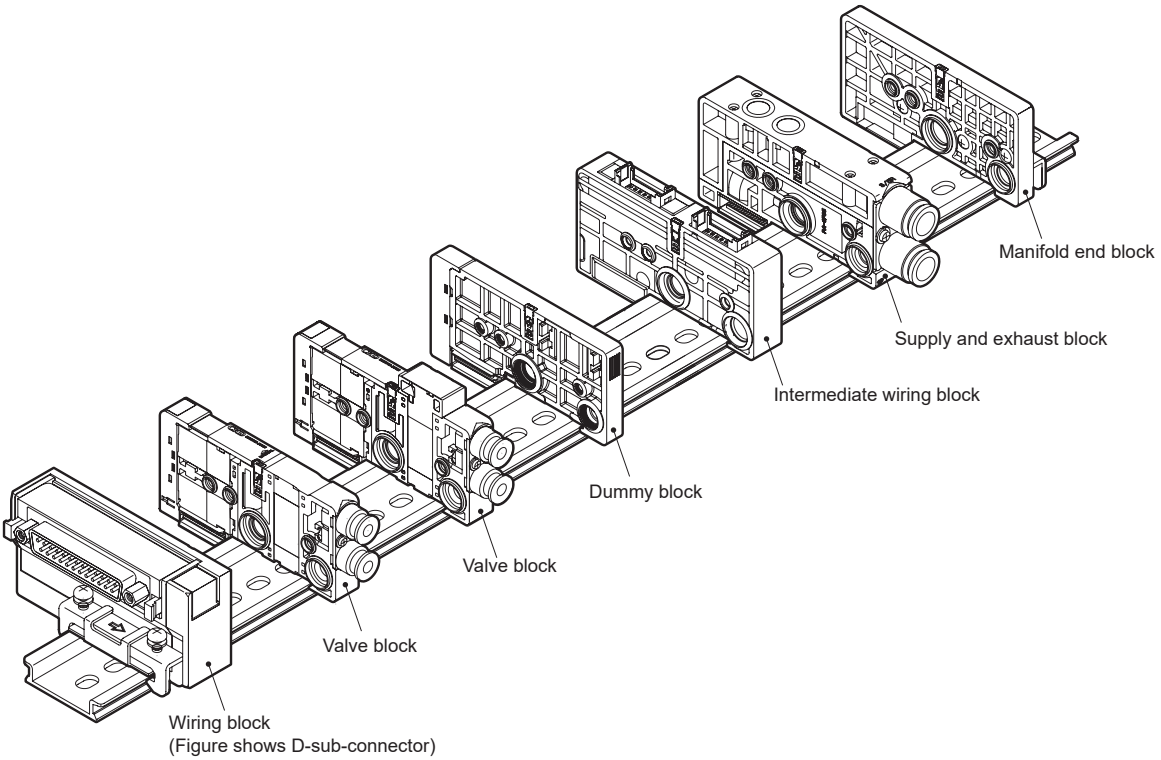

Example of main configuration parts model No.

(Refer to pages 378 to 387 for details)

Part name	Model No. (example)	Part name	Model No. (example)
Wiring block	N4E0-T30-P70	Intermediate wiring block	N4E0-TM1A-P70
Valve block	N4E020-C4-3-P70	Supply and exhaust block	N4E0-Q-8-P70
	N4E030-C4-3-P70	End block	N4E0-ER-P70
Dummy block	N4E0-MPD-P70		

Related parts list

Part name	Model No. (example)	Part name	Model No. (example)
Cartridge push-in fitting and related parts	N4E0-JOINT-C18-P70	Cartridge push-in fitting and related parts	N4E0-JOINT-CF-P70
	N4E0-JOINT-C4-P70		N4E0-JOINT-CPG-P70
	N4E0-JOINT-C6-P70		
	N4E0-JOINT-CL18-P70		
	N4E0-JOINT-CL4-P70		
	N4E0-JOINT-CL6-P70		
	N4E0-JOINT-C3N-P70		
	N4E0-JOINT-C4N-P70		
	N4E0-JOINT-CL3N-P70		
	N4E0-JOINT-CL4N-P70		

MEMO

SCPD3
SCM
SSD2
MDC2
SMG
LCM
LCR
LCG
LCX
STM
STG
STR2
MRL2
GRC
Cylinder switch
MN3E MN4E
4GA/B
M4GA/B
MN4GA/B
F.R (module unit)
Clean F.R
Precision R
Press gauge Diff. press gauge
Electro-pneumatic R
Speed controller
Auxiliary valve
Fitting/ tube
Clean air unit
Pressure sensor
Flow rate sensor
Valve for air blow
Ending

How to order manifold Serial transmission

* Refer to page 362 for details on D sub-connector/flat cable connector.

● Discrete valve block

N 3 E0 66 0 - C4 - M D2 F — 3 - P70

● Block manifold

M N 4 E0 1 0 - C4 - M T6G1 D2 W F - 5 - 3 - P70

- DIN rail mount
- Ⓐ Valve
- Ⓑ Solenoid position
- Ⓒ Port size
- Ⓓ Manual operating device
- Ⓔ Wiring method (serial transmission)
- Ⓕ Terminal and connector pin wiring
- Individual wiring
- Ⓖ Option
- Ⓗ Station No.
- Ⓘ Voltage
- Clean room specifications

* Always indicate "Manifold specifications" (page 410).

Type	
Block manifold	Discrete valve block

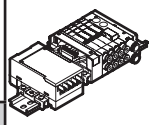

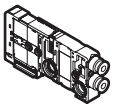

Code	Content		Block manifold	Discrete valve block
Ⓐ Valve				
3	3-port valve or two 3-port valves integrated		●	●
4	4-port valve or 3, 4-port valve mix		●	●
Ⓑ Solenoid position (*8)				
1	3-port valve: Single NC self reset	(differential pressure spring return)	●	●
11	3-port valve: Single NO self reset	(differential pressure spring return)	●	●
2	3-port valve: Double NC self holding		●	●
21	3-port valve: Double NO self holding		●	●
66	Dual 3-port valve integrated (*1): A side valve: NC self reset	(differential pressure return)	●	●
66S	Dual 3-port valve integrated (*1): B side valve: NC self reset	(differential pressure spring return)	●	●
67	Dual 3-port valve integrated (*1): A side valve: NC self reset	(differential pressure return)	●	●
67S	Dual 3-port valve integrated (*1): B side valve: NO self reset	(differential pressure spring return)	●	●
76	Dual 3-port valve integrated (*1): A side valve: NO self reset	(differential pressure return)	●	●
76S	Dual 3-port valve integrated (*1): B side valve: NC self reset	(differential pressure spring return)	●	●
77	Dual 3-port valve integrated (*1): A side valve: NO self reset	(differential pressure return)	●	●
77S	Dual 3-port valve integrated (*1): B side valve: NO self reset	(differential pressure spring return)	●	●
1	4-port valve: 2-position single self reset	(differential pressure spring return)	●	●
2	4-port valve: 2-position double self hold		●	●
3	4-port valve: 3-position all ports closed		●	●
4	4-port valve: 3-position A/B/R connection		●	●
5	4-port valve: 3-position P/A/B connection		●	●
8	Mixed manifold		●	
Ⓒ Port size				
CF	ø1.8 barbed fitting (applicable tube UP-9102-**)		●	●
C18	ø1.8 push-in fitting, Lateral (applicable tube UP-9402-**)		●	●
CL18	ø1.8 push-in fitting, Facing up (applicable tube UP-9402-**)		●	●
C4	ø4 push-in fitting, Lateral		●	●
CL4	ø4 push-in fitting, Facing up		●	●
C6	ø6 push-in fitting, Lateral		●	●
CL6	ø6 push-in fitting, Facing up		●	●
M5	M5 female thread (with non-rotation)		●	●
CX	Mix push-in fitting (*10)		●	●
C3N	ø1/8” push-in fitting, Lateral		●	●
C4N	ø5/32” push-in fitting, Lateral		●	●
CL3N	ø1/8” push-in fitting, Facing up		●	●
CL4N	ø5/32” push-in fitting, Facing up		●	●
CXN	Mix push-in fitting (*10)		●	●
Ⓓ Manual operating device				
Blank	Locking/non-locking common (with manual cover)		●	●
M	Manual override for non-locking (with manual cover)		●	●
Ⓔ Wiring method				
Refer to the following page about wiring method.			●	
Ⓕ Terminal and connector pin wiring				
Blank	Standard wiring		●	●
W	Double wiring (*2, *3)		●	●
Ⓖ Option				
Blank	None		●	●
E	Low-heat and energy saving circuit (*4)		●	●
U	Built-in individual power supply function (AUX) (*4, *5)		●	●
A	Ozone proof		●	●
F	Port A/B filter integrated (*6)		●	●
Ⓗ Station No.				(*9)
1	1 station		●	
to	to			
32	32 stations (*7)			
Ⓘ Voltage				
3	24 VDC		●	●

⚠ Precautions for model No. selection

*1: Dual 3-port valve integrated cannot be used with the external pilot.Contact CKD for the other working conditions.

***2: Refer to the connector pin layout (example) given on pages 399 to 403 for the double wiring specifications.** When ordering individual valve blocks, the double wiring designation is limited to the 2-position single solenoid for the 3-port valve and to the 2-position single solenoid for the 4-port valve.

*3: Double wiring is not available for discrete individual wiring valve block.

*4: Energizing is limited to the plus common. Also "E" and "U" cannot be selected at the same time.

*5: "U" is not available for individual wiring.

*6: A filter (for preventing entry of foreign matter) is incorporated in the supply/ exhaust block's P port.

***7: Differs based on the specifications. Refer to page 360.**

***8: For specifications of the self reset, refer to the precautions on page 412.** To include a dummy block, select mix manifold.

*9: A dummy block is counted in the station No.

*10: A mix of metric fittings, M5 female threads and inch fittings cannot be selected.

(Wiring method list)

Code		Content	Type: Block manifold	Type: Discrete valve block
			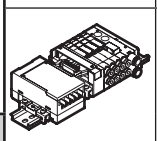	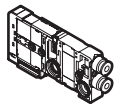
Ⓔ Wiring method				
T6G1		CC-Link 16 points	●	
T7D1		Close contact, DeviceNet 16 points	●	
T7D2		Close contact, DeviceNet 32 points	●	
T7G1		Close contact, CC-Link 16 points	●	
T7G2		Close contact, CC-Link 32 points	●	
T7N1		Close contact, S-LINK V 16 points	●	
T7N2		Close contact, S-LINK V 32 points (*9)	●	
T7EC1		Close contact EtherCAT 16 points (port side leadout)	●	
T7EC2		Close contact EtherCAT 32 points (port side leadout)	●	
T7ECT1		Close contact EtherCAT 16 points (wiring side leadout)	●	
T7ECT2		Close contact EtherCAT 32 points (wiring side leadout)	●	
T7EN1		Close contact EtherNet/IP 16 points	●	
T7EN2		Close contact EtherNet/IP 32 points	●	
Blank		Valve block for reduced wiring		●
D2	Individual wiring	D connector lead wire length 300 mm	●	●
D20	Individual wiring	D connector lead wire length 500 mm	●	●
D21	Individual wiring	D connector lead wire length 1000 mm	●	●
D22	Individual wiring	D connector lead wire length 2000 mm	●	●
D23	Individual wiring	D connector lead wire length 3000 mm	●	●
D2N	Individual wiring	D connector without lead wire without socket	●	●
D3	Individual wiring	D connector without lead wire with socket/terminal	●	●

Ozone-proof specifications

Can be selected with "How to order" option "A" on pages 362 and 366.

Manifold configuration explanation and parts list

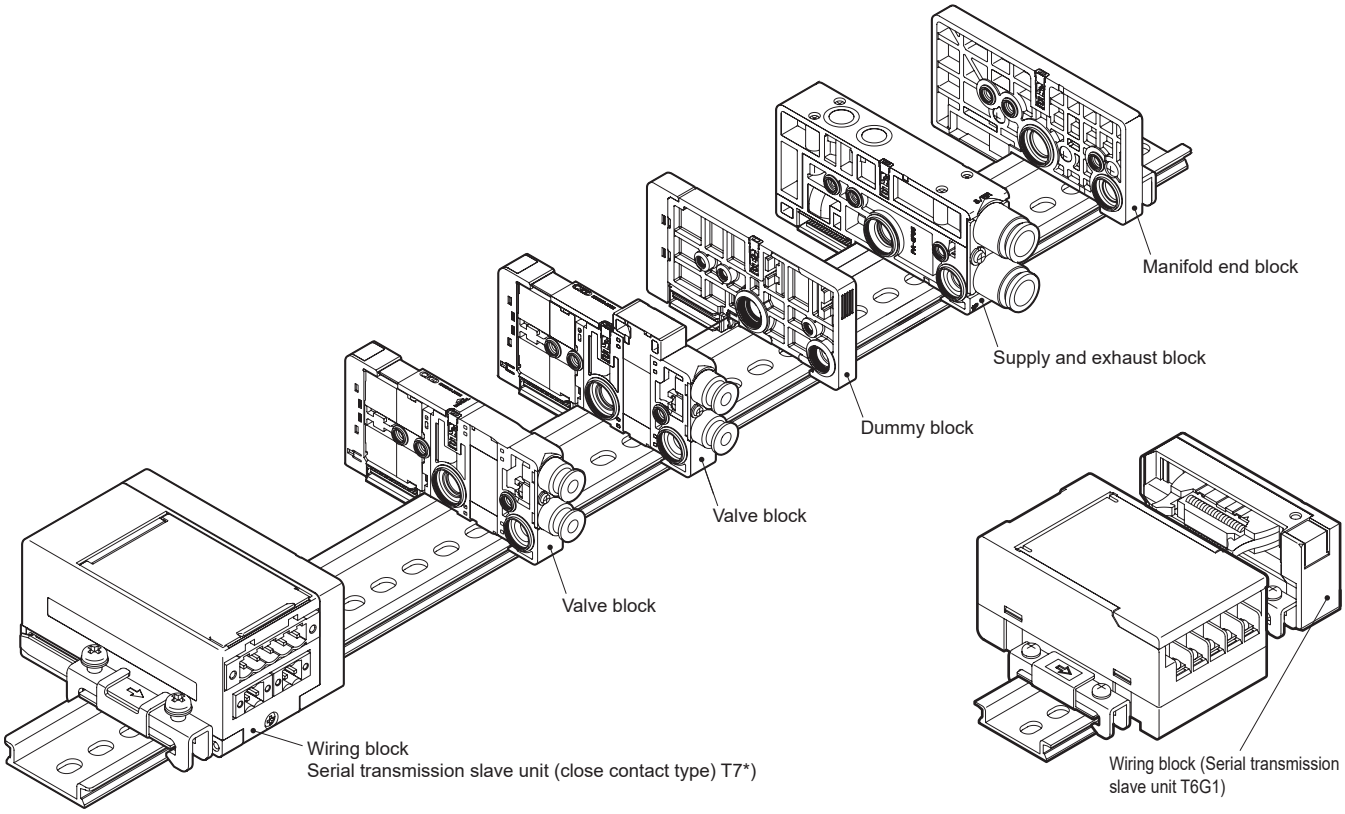

Example of main configuration parts model No.

(Refer to pages 378 to 387 for details)

Part name	Model No. (example)	Part name	Model No. (example)
Wiring block	N4E0-T7G2-P70	Intermediate wiring block	N4E0-TM1A-P70
Valve block	N4E020-C4-3-P70	Supply and exhaust block	N4E0-Q-8-P70
	N4E030-C4-3-P70	End block	N4E0-ER-P70

Related parts list

Part name	Model No. (example)	Part name	Model No. (example)
Cartridge push-in fitting and related parts	N4E0-JOINT-C18-P70	Cartridge push-in fitting and related parts	N4E0-JOINT-CF-P70
	N4E0-JOINT-C4-P70		N4E0-JOINT-CPG-P70
	N4E0-JOINT-C6-P70		
	N4E0-JOINT-CL18-P70		
	N4E0-JOINT-CL4-P70		
	N4E0-JOINT-CL6-P70		
	N4E0-JOINT-C3N-P70		
	N4E0-JOINT-C4N-P70		
	N4E0-JOINT-CL3N-P70		
	N4E0-JOINT-CL4N-P70		

MEMO

Dimensions

MN$^{3}_{4}$E0*-*-T30(N)*-*-*-P70

● D-sub-connector, left (T30(N))

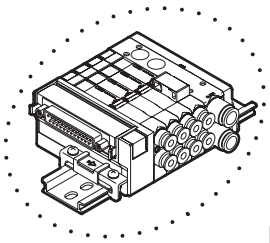

* D sub-connector can be faced up or down.
* For how to switch the connector direction, refer to page 375.

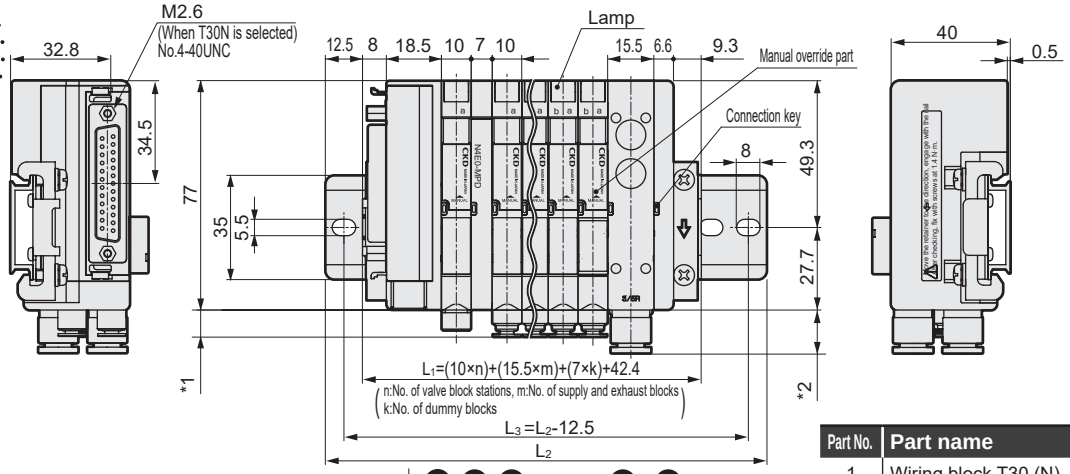

(*1) Valve block fitting dimensions		
Push-in fitting	ø1.8	5.5
	ø4	9.5
	ø6	10.7
	ø1/8"	10.0
	ø5/32"	9.6
Fiber tube		8.5
M5 female thread		6.9

(*2) Supply and exhaust block fitting dimensions	
ø6	14
ø8	14.8
ø1/4"	15.1
ø5/16"	15.3

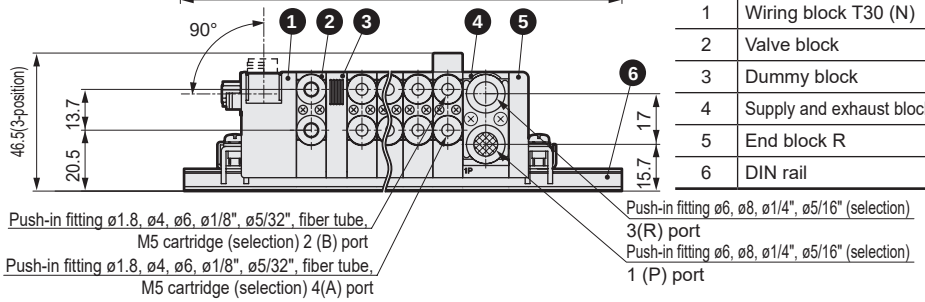

Part No.	Part name
1	Wiring block T30 (N)
2	Valve block
3	Dummy block
4	Supply and exhaust block
5	End block R
6	DIN rail

*** For dimensions of the radial push-in fitting (facing up) for valve block and for supply and exhaust block and the valve block with individual power supply function (AUX), refer to page 375.**

MN$^{3}_{4}$E0*-*-T30(N)R*-*-*-P70

● D-sub-connector, right (T30(N)R)

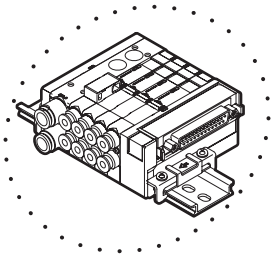

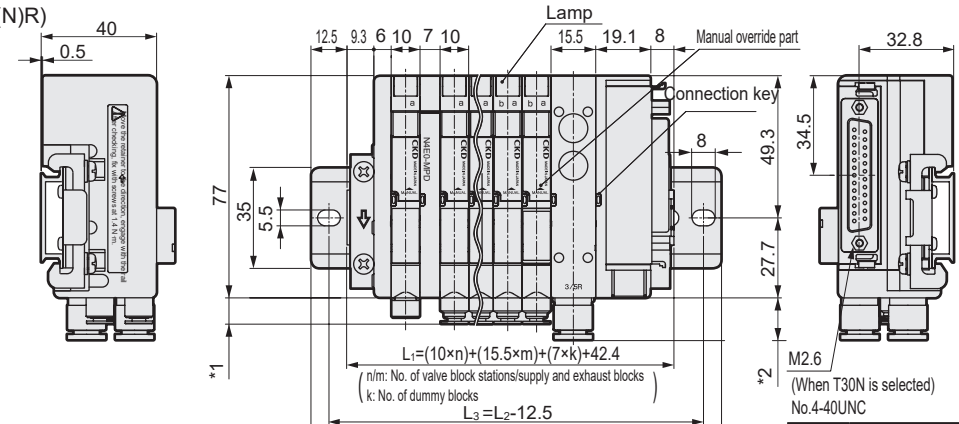

(*1) Valve block fitting dimensions		
Push-in fitting	ø1.8	5.5
	ø4	9.5
	ø6	10.7
	ø1/8"	10.0
	ø5/32"	9.6
Fiber tube		8.5
M5 female thread		6.9

(*2) Supply and exhaust block fitting dimensions	
ø6	14
ø8	14.8
ø1/4"	15.1
ø5/16"	15.3

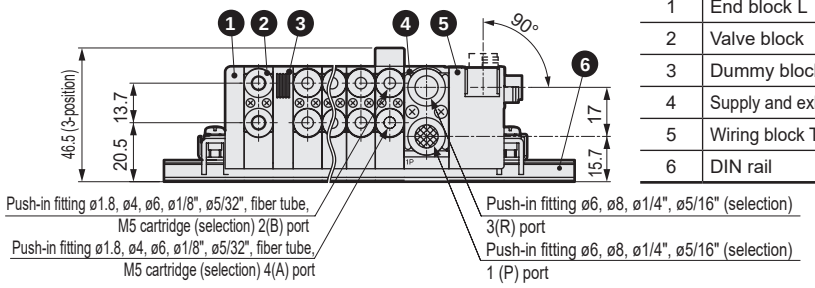

Part No.	Part name
1	End block L
2	Valve block
3	Dummy block
4	Supply and exhaust block
5	Wiring block T30(N)R
6	DIN rail

Manifold length L1 mm	76.2 or less	88.7 or less	101.2 or less	113.7 or less	126.2 or less	138.7 or less	151.2 or less	163.7 or less	176.2 or less	188.7 or less	201.2 or less	213.7 or less	226.2 or less	238.7 or less	251.2 or less	263.7 or less	276.2 or less	288.7 or less	301.2 or less	313.7 or less	326.2 or less	338.7 or less	351.2 or less
Mounting rail length L2 mm	100	112.5	125	137.5	150	162.5	175	187.5	200	212.5	225	237.5	250	262.5	275	287.5	300	312.5	325	337.5	350	362.5	375
Mounting rail pitch L3 mm	87.5	100	112.5	125	137.5	150	162.5	175	187.5	200	212.5	225	237.5	250	262.5	275	287.5	300	312.5	325	337.5	350	362.5

Dimensions

MN$^{3}_{4}$E0*-*-T50*-*-*-P70

● Flat cable connector, left (T50)

***T51, T52, and T53 are also available. Dimensions is the same as T50. For dimensions of the connector*3 Refer to the connector Dimensions.**

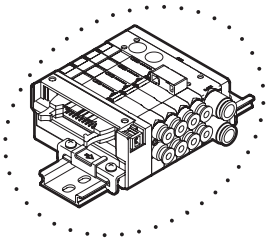

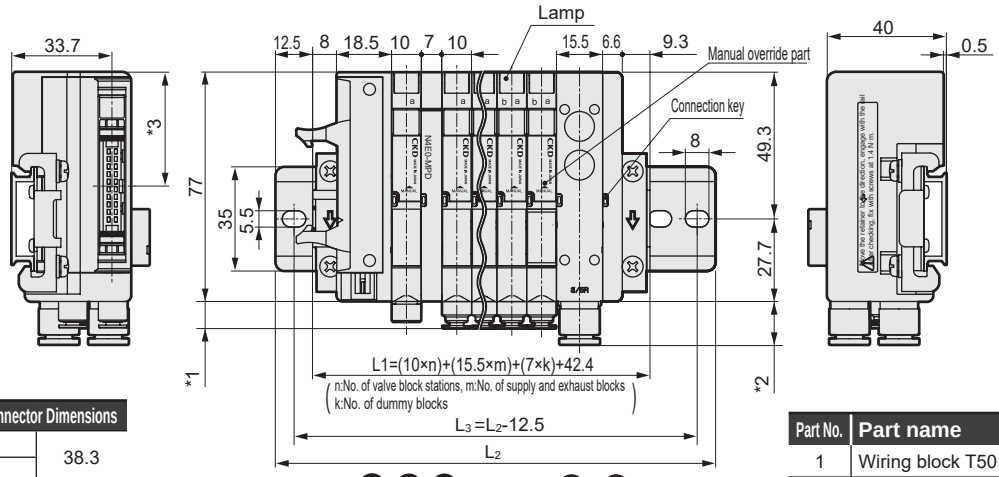

(*1) Valve block fitting dimensions		
Push-in fitting	ø1.8	5.5
	ø4	9.5
	ø6	10.7
	ø1/8"	10.0
	ø5/32"	9.6
Fiber tube		8.5
M5 female thread		6.9

*3 Connector Dimensions	
T50	38.3
T51	
T52	32.0
T53	34.5

(*2) Supply and exhaust block fitting dimensions	
ø6	14
ø8	14.8
ø1/4"	15.1
ø5/16"	15.3

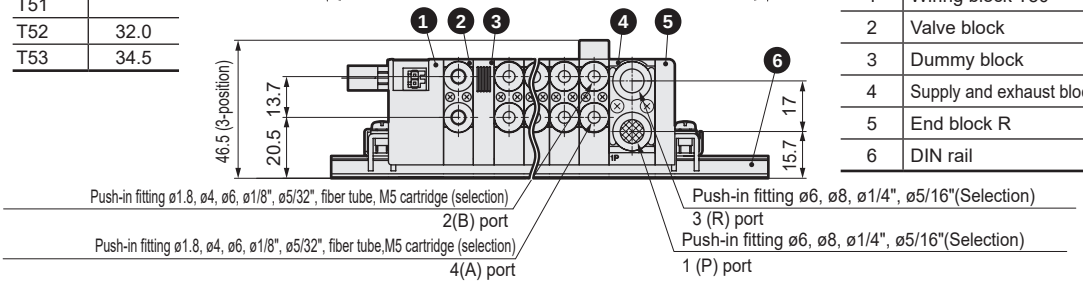

Part No.	Part name
1	Wiring block T50
2	Valve block
3	Dummy block
4	Supply and exhaust block
5	End block R
6	DIN rail

*** For dimensions of the radial push-in fitting (facing up) for valve block and for fiber tube and supply and exhaust block, refer to page 375.**

*** A power feed connector can be used with T50 to supply power to the PLC output unit. Refer to page 375 for how to connect the connector and refer to the wiring precautions on page 391 for how to wire.**

MN$^{3}_{4}$E0*-*-T50R*-*-*-P70

● Flat cable connector right-side type (T50R)

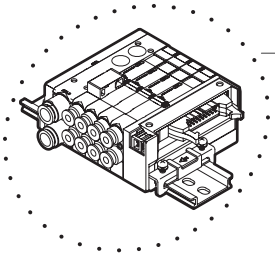

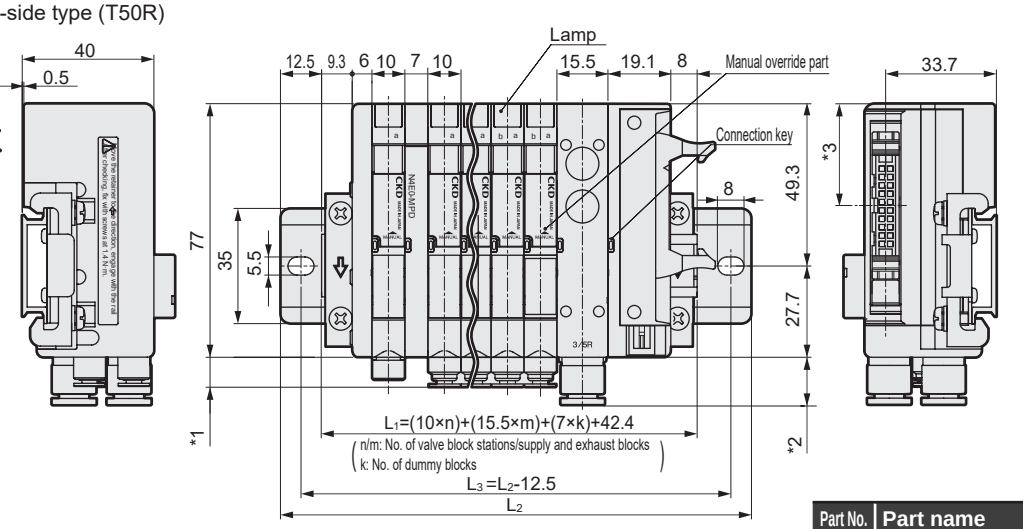

(*1) Valve block fitting dimensions		
Push-in fitting	ø1.8	5.5
	ø4	9.5
	ø6	10.7
	ø1/8"	10.0
	ø5/32"	9.6
Fiber tube		8.5
M5 female thread		6.9

(*3) Connector Dimensions	
T50R	30.7
T51R	
T52R	37.1
T53R	34.5

(*2) Supply and exhaust block fitting dimensions	
ø6	14
ø8	14.8
ø1/4"	15.1
ø5/16"	15.3

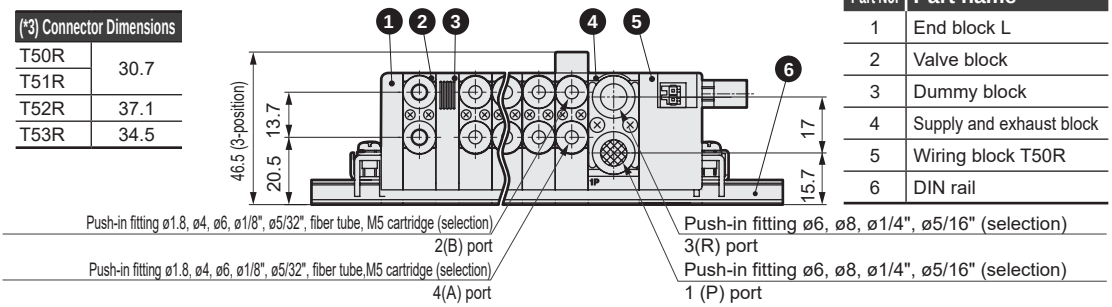

Part No.	Part name
1	End block L
2	Valve block
3	Dummy block
4	Supply and exhaust block
5	Wiring block T50R
6	DIN rail

Manifold length L1 mm	76.2 or less	88.7 or less	101.2 or less	113.7 or less	126.2 or less	138.7 or less	151.2 or less	163.7 or less	176.2 or less	188.7 or less	201.2 or less	213.7 or less	226.2 or less	238.7 or less	251.2 or less	263.7 or less	276.2 or less	288.7 or less	301.2 or less	313.7 or less	326.2 or less	338.7 or less	351.2 or less
Mounting rail length L2 mm	100	112.5	125	137.5	150	162.5	175	187.5	200	212.5	225	237.5	250	262.5	275	287.5	300	312.5	325	337.5	350	362.5	375
Mounting rail pitch L3 mm	87.5	100	112.5	125	137.5	150	162.5	175	187.5	200	212.5	225	237.5	250	262.5	275	287.5	300	312.5	325	337.5	350	362.5

SCPD3
SCM
SSD2
MDC2
SMG
LCM
LCR
LCG
LCX
STM
STG
STR2
MRL2
GRC
Cylinder switch
MN3E MN4E
4GA/B
M4GA/B
MN4GA/B
F.R (module unit)
Clean F.R
Precision R
Press gauge Diff. press gauge
Electro-pneumatic R
Speed controller
Auxiliary valve
Fitting/ tube
Clean air unit
Pressure sensor
Flow rate sensor
Valve for air blow
Ending

Dimensions

MN$^{3}_{4}$E0*-*-TM1$^{A}_{C}$*-*-*-P70

● RITS connector, intermediate wiring (TM)1$^{A}_{C}$)

MN$^{3}_{4}$E0*-*-TM52*-*-*-P70

● 10-pin flat cable connector, intermediate wiring (TM52)

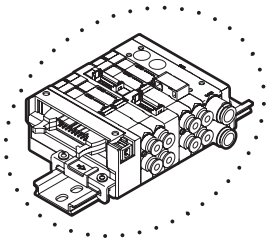

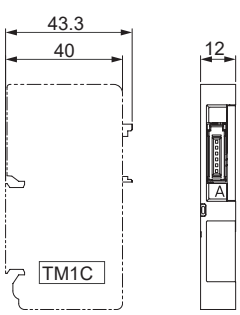

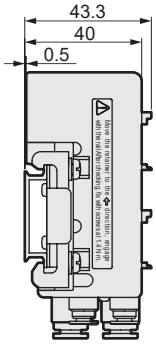

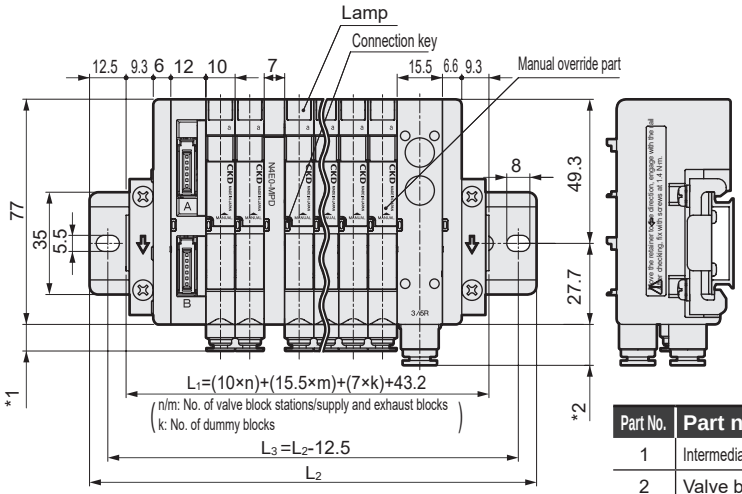

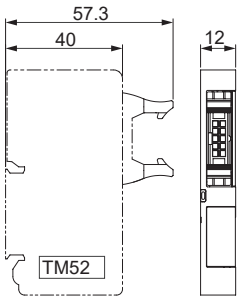

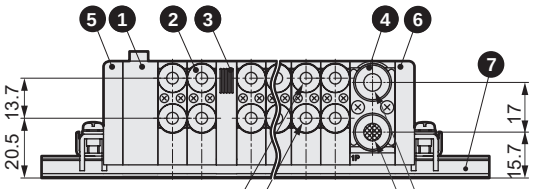

Push-in fitting ø1.8, ø4, ø6, ø1/8", ø5/32", fiber tube, M5 cartridge (selection) 2(B) port
Push-in fitting ø1.8, ø4, ø6, ø1/8", ø5/32", fiber tube, M5 cartridge (selection) 4(A) port
Push-in fitting ø6, ø8, ø1/4", ø5/16" (selection) 3(R) port
Push-in fitting ø6, ø8, ø1/4", ø5/16" (selection) 1 (P) port

Part No.	Part name
1	Intermediate wiring block TM1A
2	Valve block
3	Dummy block
4	Supply and exhaust block
5	End block L
6	End block R
7	DIN rail

(*1) Valve block fitting dimensions		
Push-in fitting	ø1.8	5.5
	ø4	9.5
	ø6	10.7
	ø1/8"	10.0
	ø5/32"	9.6
Fiber tube		8.5
M5 female thread		6.9

(*2) Supply and exhaust block fitting dimensions	
ø6	14
ø8	14.8
ø1/4"	15.1
ø5/16"	15.3

Manifold length L1 mm	76.2 or less	88.7 or less	101.2 or less	113.7 or less	126.2 or less	138.7 or less	151.2 or less	163.7 or less	176.2 or less	188.7 or less	201.2 or less	213.7 or less	226.2 or less	238.7 or less	251.2 or less	263.7 or less	276.2 or less	288.7 or less	301.2 or less	313.7 or less	326.2 or less	338.7 or less	351.2 or less
Mounting rail length L2 mm	100	112.5	125	137.5	150	162.5	175	187.5	200	212.5	225	237.5	250	262.5	275	287.5	300	312.5	325	337.5	350	362.5	375
Mounting rail pitch L3 mm	87.5	100	112.5	125	137.5	150	162.5	175	187.5	200	212.5	225	237.5	250	262.5	275	287.5	300	312.5	325	337.5	350	362.5

Dimensions

MN$^{3}_{4}$E0*-*-T6G1-*-*-P70

● Serial transmission (T6G1)

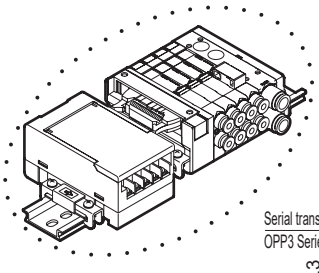

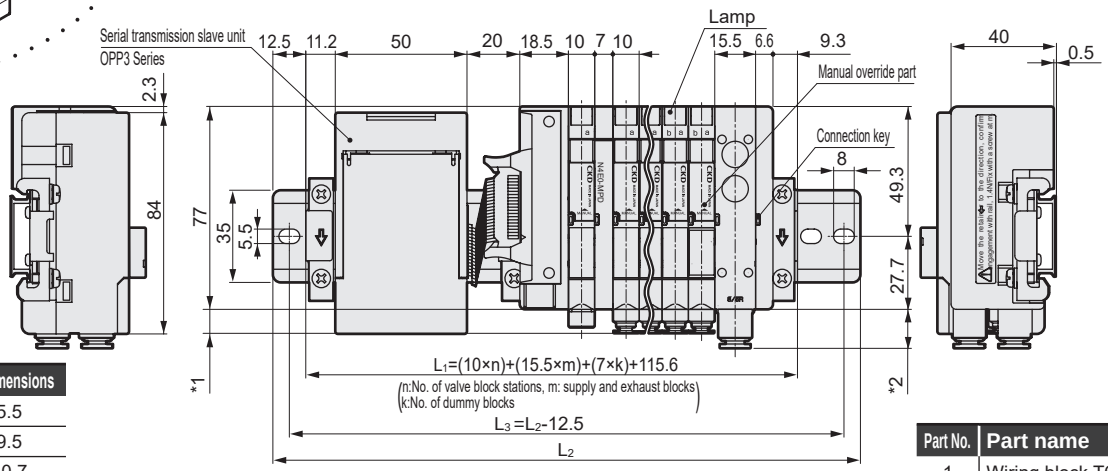

(*1) Valve block fitting dimensions		
Push-in fitting	ø1.8	5.5
	ø4	9.5
	ø6	10.7
	ø1/8"	10.0
	ø5/32"	9.6
Fiber tube		8.5
M5 female thread		6.9

(*2) Supply and exhaust block fitting dimensions	
ø6	14
ø8	14.8
ø1/4"	15.1
ø5/16"	15.3

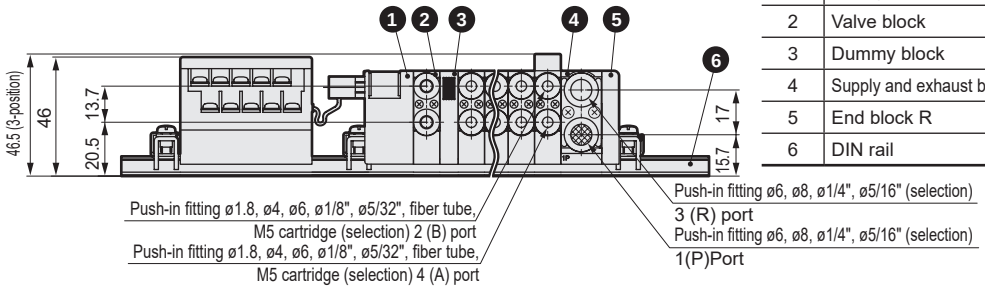

Part No.	Part name
1	Wiring block T6G1
2	Valve block
3	Dummy block
4	Supply and exhaust block
5	End block R
6	DIN rail

MN$^{3}_{4}$E0*-*-T7**-*-*-P70

● Serial transmission (close contact) (T7*)

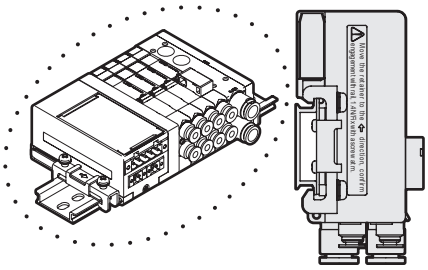

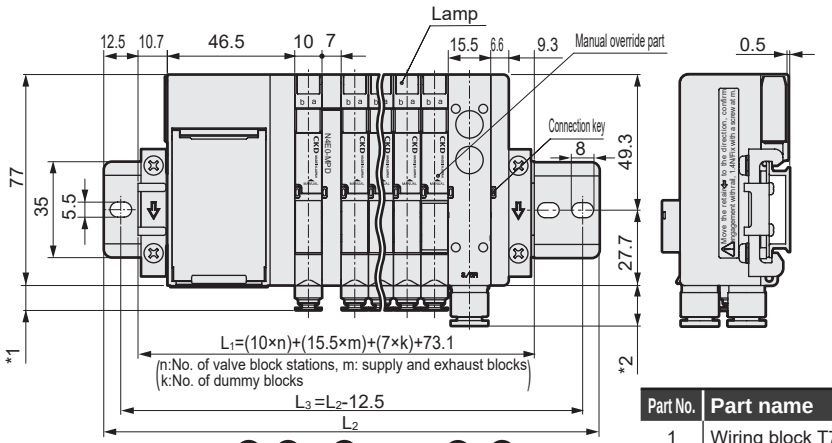

(*1) Valve block fitting dimensions		
Push-in fitting	ø1.8	5.5
	ø4	9.5
	ø6	10.7
	ø1/8"	10.0
	ø5/32"	9.6
Fiber tube		8.5
M5 female thread		6.9

(*2) Supply / exhaust block fitting dimensions	
ø6	14
ø8	14.8
ø1/4"	15.1
ø5/16"	15.3

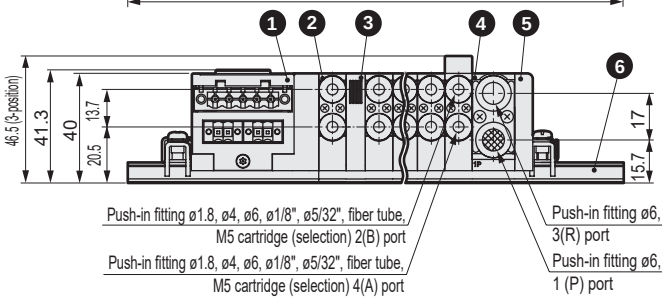

Part No.	Part name
1	Wiring block T7*
2	Valve block
3	Dummy block
4	Supply and exhaust block
5	End block R
6	DIN rail

* For dimensions of the radial push-in fitting (facing up) for valve block and for fiber tube and supply and exhaust block, refer to page 375.

Manifold length L1 mm	76.2 or less	88.7 or less	101.2 or less	113.7 or less	126.2 or less	138.7 or less	151.2 or less	163.7 or less	176.2 or less	188.7 or less	201.2 or less	213.7 or less	226.2 or less	238.7 or less	251.2 or less	263.7 or less	276.2 or less	288.7 or less	301.2 or less	313.7 or less	326.2 or less	338.7 or less	351.2 or less
Mounting rail length L2 mm	100	112.5	125	137.5	150	162.5	175	187.5	200	212.5	225	237.5	250	262.5	275	287.5	300	312.5	325	337.5	350	362.5	375
Mounting rail pitch L3 mm	87.5	100	112.5	125	137.5	150	162.5	175	187.5	200	212.5	225	237.5	250	262.5	275	287.5	300	312.5	325	337.5	350	362.5

Dimensions

MN 3/4 E00*-*-T7**-*-*-P70

● Serial transmission (T7EC□□)

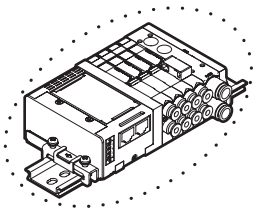

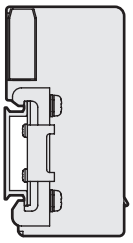

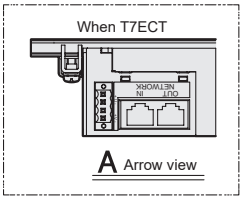

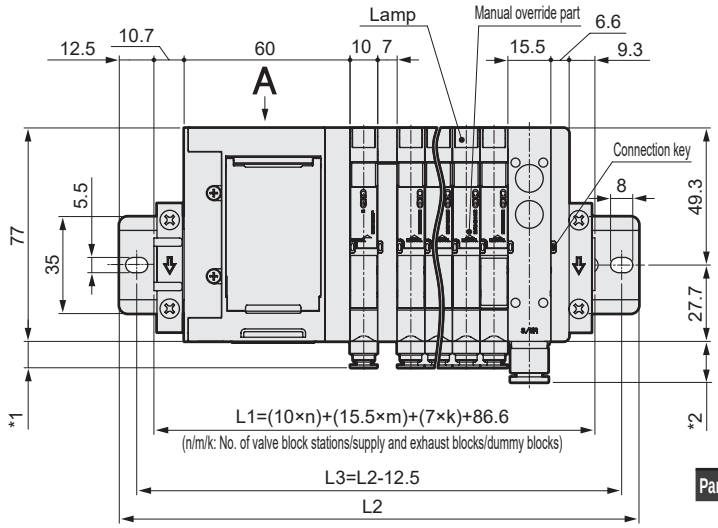

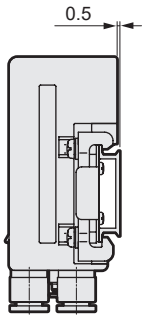

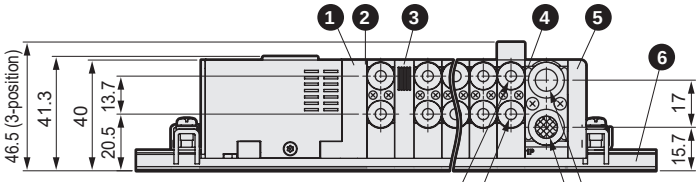

Part No.	Part name
1	Wiring block T7*
2	Valve block
3	Dummy block
4	Supply and exhaust block
5	End block R
6	DIN rail

(*1) Valve block fitting dimensions		
Push-in fitting	ø1.8	5.5
	ø4	9.5
	ø6	10.7
	ø1/8"	10.0
	ø5/32"	9.6
Fiber tube		8.5
M5 female thread		6.9

(*2) Supply / exhaust block fitting dimensions	
ø6	14
ø8	14.8
ø1/4"	15.1
ø5/16"	15.3

MN 3/4 E0*-*- (D2 to D3)-*-*-P70

● Individual wiring connector (D2/D20/D21/D22/D23/D2N/D3)

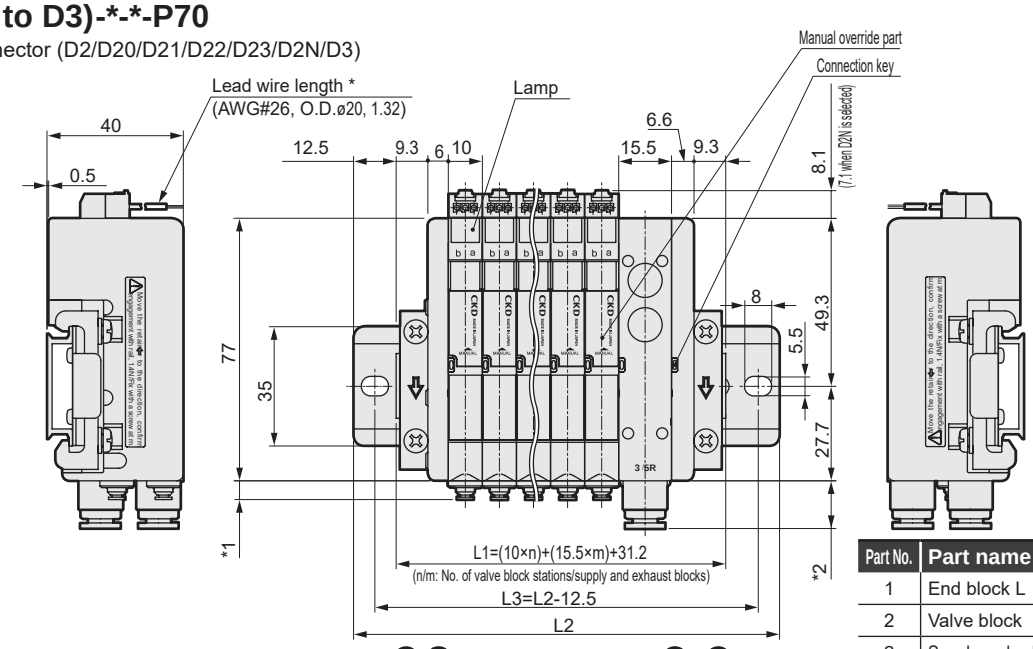

Part No.	Part name
1	End block L
2	Valve block
3	Supply and exhaust block
4	End block R
5	DIN rail

* Lead wire length	
D2	300mm
D20	500mm
D21	1000 mm
D22	2000 mm
D23	3000 mm

(*1) Valve block fitting dimensions		
Push-in fitting	ø1.8	5.5
	ø4	9.5
	ø6	10.7
	ø1/8"	10.0
	ø5/32"	9.6
Fiber tube		8.5
M5 female thread		6.9

(*2) Supply / exhaust block fitting dimensions	
ø6	14
ø8	14.8
ø1/4"	15.1
ø5/16"	15.3

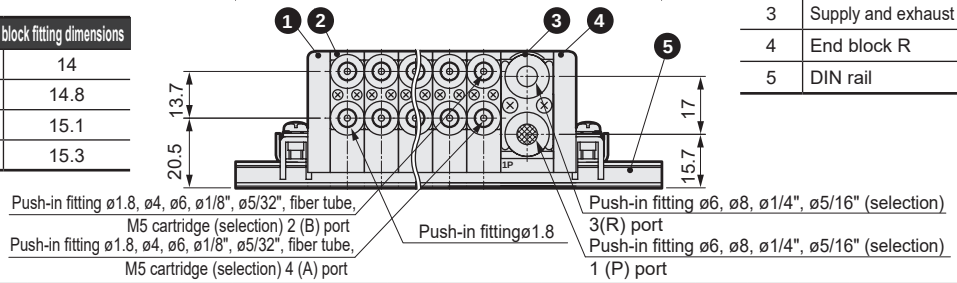

Manifold length L1 mm	63.7 or less	76.2 or less	88.7 or less	101.2 or less	113.7 or less	126.2 or less	138.7 or less	151.2 or less	163.7 or less	176.2 or less	188.7 or less	201.2 or less	213.7 or less	226.2 or less	238.7 or less	251.2 or less	263.7 or less	276.2 or less	288.7 or less	301.2 or less	313.7 or less	326.2 or less	338.7 or less	351.2 or less
Mounting rail length L2 mm	87.5	100	112.5	125	137.5	150	162.5	175	187.5	200	212.5	225	237.5	250	262.5	275	287.5	300	312.5	325	337.5	350	362.5	375
Mounting rail pitch L3 mm	75	87.5	100	112.5	125	137.5	150	162.5	175	187.5	200	212.5	225	237.5	250	262.5	275	287.5	300	312.5	325	337.5	350	362.5

Dimensions

● Piping blocks (common for all types)

For fiber tube
Push-in fitting (upward)
● ø1.8 (CL18)

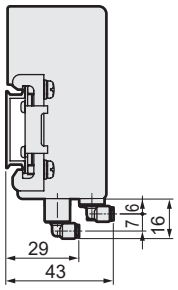

Valve block
Radial push-in fitting (upward)
● ø4 (CL4)

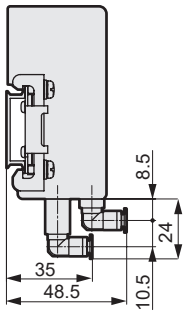

●ø6 (CL6)

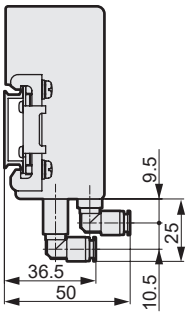

Valve block
Radial push-in fitting (upward)
● ø1/8" (CL3N)

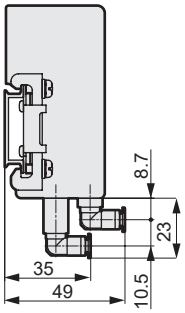

● ø5/32" (CL4N)

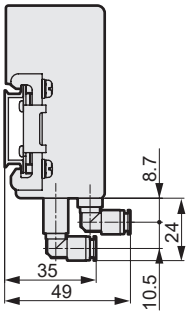

Supply and exhaust block
Radial push-in fitting (upward)
●ø6(CL6)

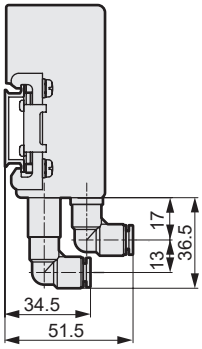

● ø8 (CL8)

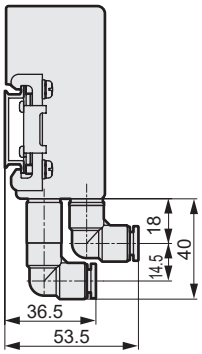

Supply and exhaust block
Radial push-in fitting (upward)
● ø1/4" (CL6N)

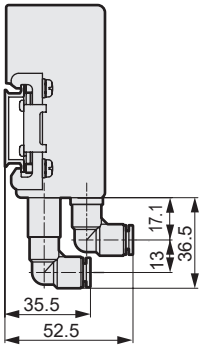

● ø5/16" (CL8N)

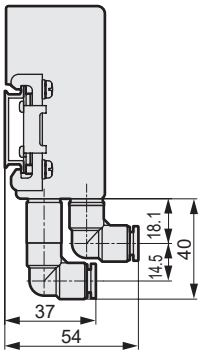

Supply and exhaust block for external pilot

●Upward piping

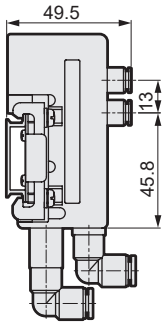

●Lateral piping

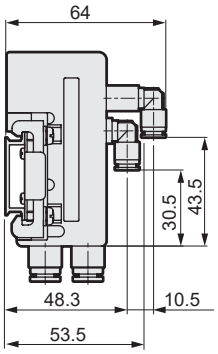

● Upward piping (inch fitting specification)

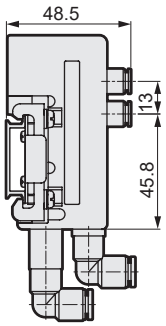

● Lateral piping (inch fitting specification)

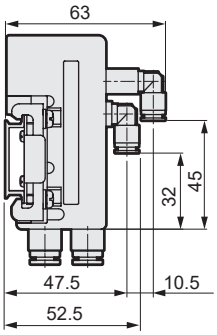

●Dimensions with T50 power supply connector

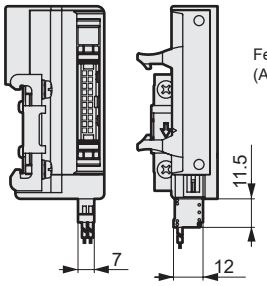

Feed connector
(Attached with product)

Applicable wire
AWG28-20

●Built-in individual power supply function (AUX)

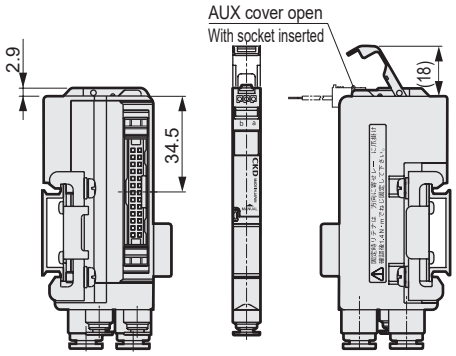

● D-sub-connector (T30/T30R): Connector section direction switching method

Usage in a horizontal state

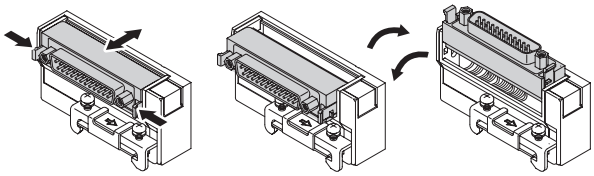

Hold the lever and pull the connector out horizontally. Push in the connector horizontally for storage. (Must be fixed.)

Rotate the connector. Fix the connector in the horizontal or vertical state during use.

Usage in a vertical state

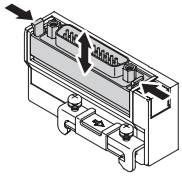

Hold the lever and pull the connector out vertically.Push in the connector horizontally for storage.(Must be fixed.)

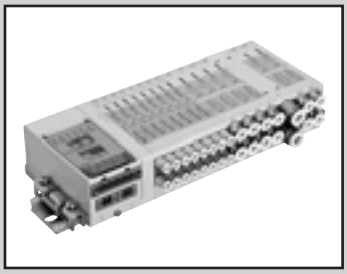

MN4E0 / MN4E00 Mix manifold

MN3EX0 / MN4EX0 Series

● Cylinder bore size: ø4 to ø32

RoHS

Structural and material restrictions

	Structure	Model No.
P7 Series	Exhaust port	– P70

Specifications

Common with all series. Refer to pages 344 and 360.

How to order

Block manifolds

MN 4 EX0 - C4 - M T53 E - 5 - 3

- MN: DIN rail Mounting method
- 4: Ⓐ Valve type
- C4: Ⓑ Port size
- M: Ⓒ Manual override
- T53: Ⓓ Wiring method
- E: Ⓔ Terminal/connector pin array
- E: Ⓕ Option
- 5: Ⓖ Station No.
- 3: Ⓗ Voltage

Code	Description
Ⓐ Valve type	
3	3-port valve or two 3-port valves integrated
4	4-port valve or 3, 4-port valve mix
Ⓑ Port size	
C18	ø1.8 push-in fitting lateral (compatible tube UP-9402)
CL18	ø1.8 push-in fitting upward (compatible tube UP-9402)
C4	ø4 push-in fitting lateral
CL4	ø4 push-in fitting upward
CX	Mix push-in fitting (*7)
C3N	ø1/8" push-in fitting lateral
CL3N	ø1/8" push-in fitting Top
C4N	ø5/32" push-in fitting lateral
CL4N	ø5/32" push-in fitting Top
CXN	Mix push-in fitting (*7)
Ⓒ Manual override	
Blank	Manual override with manual cover (for locking/non-locking)
M	Manual override with manual cover (for non-locking)
Ⓓ Wiring method	
Refer to the following page for the wiring method.	
Ⓔ Terminal/connector pin array	
Blank	Standard wiring
W	Double wiring (*1)
Ⓕ Option	
Blank	None
E	Low exoergic/energy circuit type (*2)(*3)
A	Ozone-proof product
F	Port A/B filter integrated (*4)
Ⓖ Station No.	**(*6)**
1	1 stations
to	to
32	32 stations (*5)
Ⓗ Voltage	
3	24 VDC
4	12 VDC

Precautions for model No. selection

***1: Refer to the connector pin array (example) on pages 389 to 403 for the double wiring specifications. When ordering individual valve blocks, the double wiring designation is limited to the 4-position single solenoid for the 2-port valve and to the 3-position single solenoid for the 2-port valve.**

*2: Energizing is limited to the plus common.

*3: Individual wiring is not available for low exoergic/energy circuit type.

*4: A filter (for preventing entry of foreign matter) is incorporated in the supply and exhaust block's port P.

***5: Differs depending on the specifications. Refer to pages 344 and 360.**

*6: A dummy block is counted in the station No.

*7: You cannot select a mix of metric and inch fittings.

[Wiring method list]

Code		Description
Ⓔ Wiring method		
TM1A		Intermediate wiring block RITS connector 6P x 2
TM1C		Intermediate wiring block RITS connector 6P
TM52		Intermediate wiring block 10-pin flat cable connector, 8 points compatible
T30(N)		25-pin D-sub-connector Left-sided spec.
T30(N)R		25-pin D-sub-connector Right-sided spec.
T50		20-pin flat cable connector Left-sided spec. (with power supply terminal)
T50R		20-pin flat cable connector Right-sided spec. (with power supply terminal)
T51		20-pin flat cable connector Left-sided spec.
T51R		20-pin flat cable connector Right-sided spec.
T52		10-pin flat cable connector Left-sided spec.
T52R		10-pin flat cable connector Right-sided spec.
T53		26-pin flat cable connector Left-sided spec.
T53R		26-pin flat cable connector Right-sided spec.
TX		Wiring block mix (*8))(*9)(*10)
T6G1		CC-Link 16 points
T7D1		Close contact type DeviceNet 16 points
T7D2		Close contact type DeviceNet 32 points
T7G1		Close contact type CC-Link 16 points
T7G2		Close contact type CC-Link 32 points
T7N1		Close contact type S-LINK V 16 points
T7N2		Close contact type S-LINK V 32 points
T7EC1		Close contact EtherCAT 16 points (port side leadout)
T7EC2		Close contact EtherCAT 32 points (port side leadout)
T7ECT1		Close contact EtherCAT 16 points (wiring side leadout)
T7ECT2		Close contact EtherCAT 32 points (wiring side leadout)
T7EN1		Close contact EtherNet/IP 16 points
T7EN2		Close contact EtherNet/IP 32 points
D2	* Individual wiring	D type connector Lead wire length 300 mm
D20	* Individual wiring	D type connector Lead wire length 500 mm
D21	* Individual wiring	D type connector Lead wire length 1000 mm
D22	* Individual wiring	D type connector Lead wire length 2000 mm
D23	* Individual wiring	D type connector Lead wire length 3000 mm
D2N	* Individual wiring	D type connector without lead wire without socket
D3	* Individual wiring	D type connector without lead wire with socket/terminal

*8: Request 2 pcs in the manifold specifications sheet. Contact CKD for 3 pcs. or more.
*9: Individual wiring is not available for the TX wiring method.
*10: When selecting TX wiring method, the max. station No. is 24.
* Individual wiring: Individual wiring specification is available with valve blocks designated for it.

Mix block dimensions

MN$^{3}_{4}$EXO

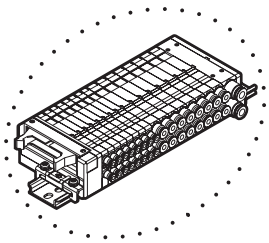

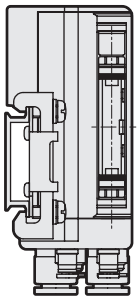

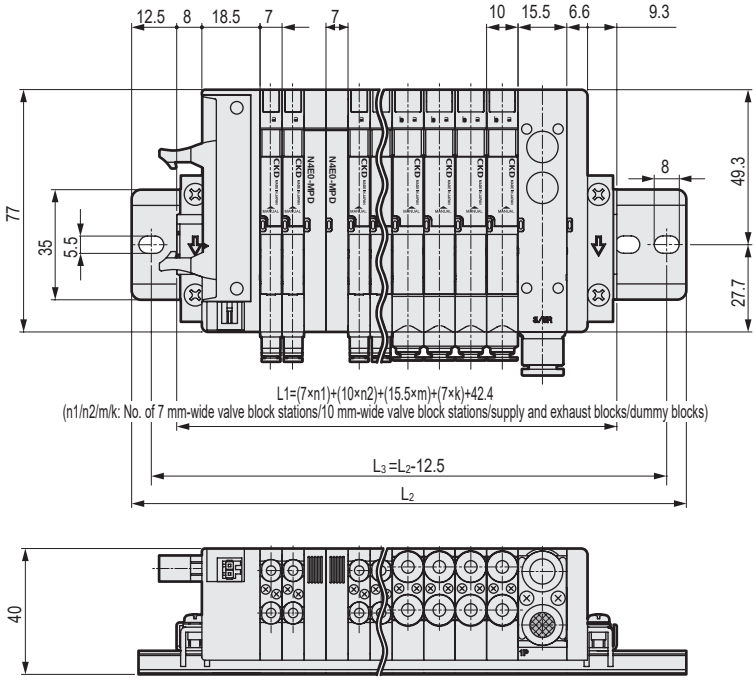

Block manifold: Block configuration

Free assembly enables multiple station expansion and maintenance.

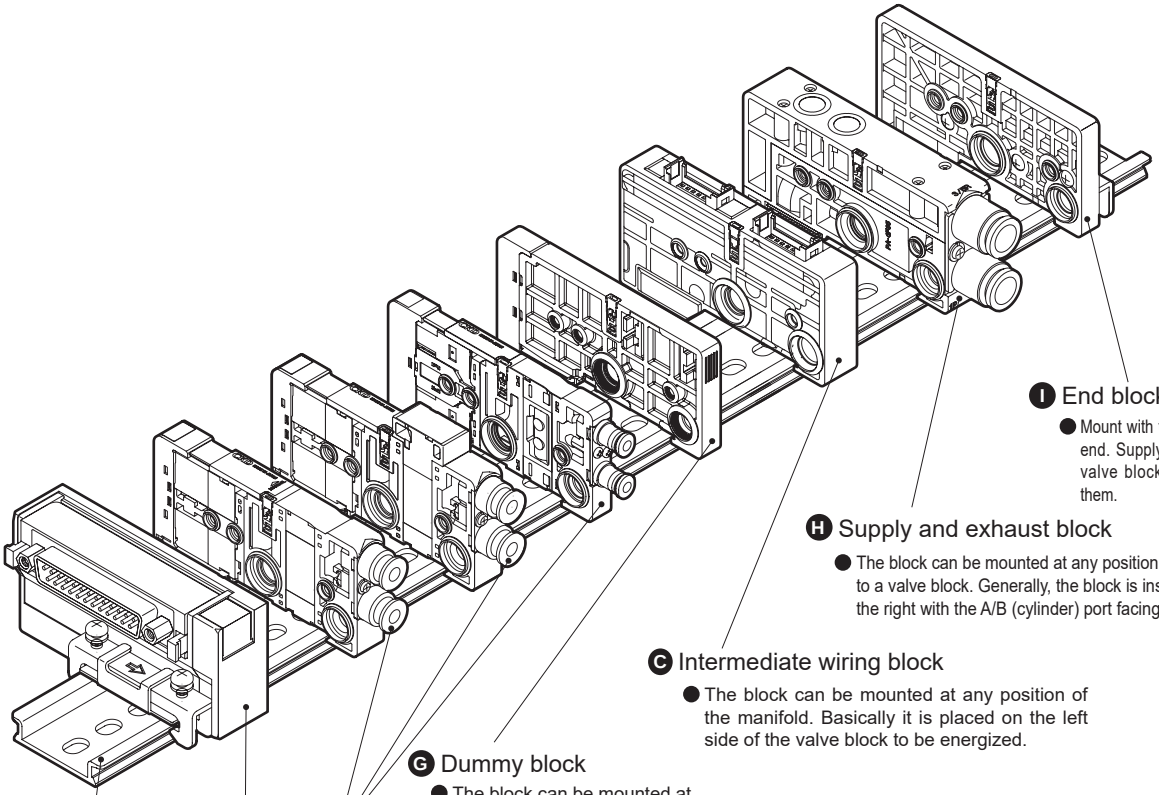

I End block
- Mount with the wiring block on the left end. Supply and exhaust blocks and valve blocks are mounted between them.

H Supply and exhaust block
- The block can be mounted at any position adjacent to a valve block. Generally, the block is installed on the right with the A/B (cylinder) port facing forward.

C Intermediate wiring block
- The block can be mounted at any position of the manifold. Basically it is placed on the left side of the valve block to be energized.

G Dummy block
- The block can be mounted at any position of the manifold.

F Valve block (7 mm pitch, 10 mm pitch)
- The selected supply and exhaust block determines internal or external pilot operated. Valve block is the same for both types.

A B D E Wiring block
- Mount with the end block on the right end. Supply and exhaust blocks and valve blocks are mounted between them.

K Mounting rail

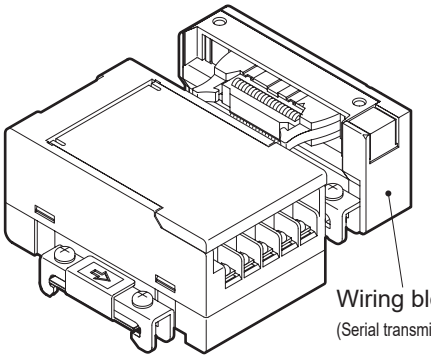

Wiring block
(Serial transmission slave unit)

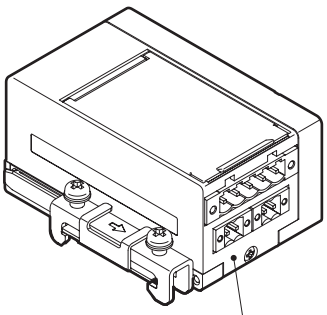

Wiring block
(Serial transmission slave unit (close contact))

Block manifold configuration

Electrical section — Electrical block

Ⓐ D sub-connector (T30(N)/T30(N)R)

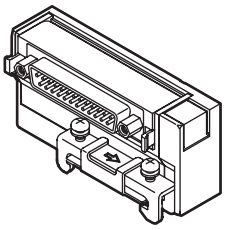

Ⓑ Flat cable connector (T5*/T5*R)

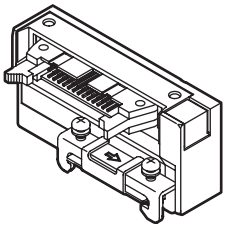

Ⓒ Intermediate electrical block (TM*)

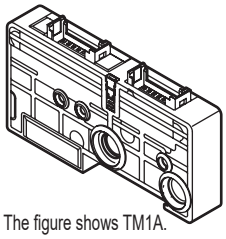

Note: The figure shows TM1A.

Ⓓ Serial transmission block (T6G1)

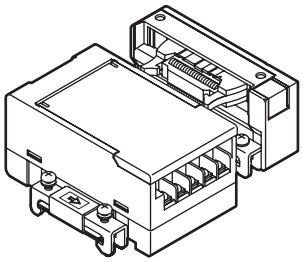

Ⓔ Serial transmission block (close contact) (T7*)

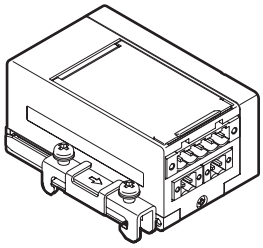

Piping section — Piping block

Ⓕ Valve block

● Push-in fitting Lateral

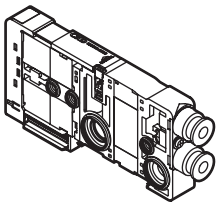

● Push-in fitting Upward

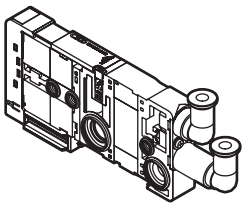

● Female thread (with non-rotation)

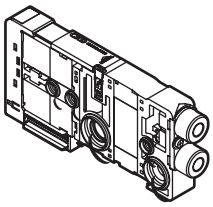

Ⓖ Dummy block (MP*)

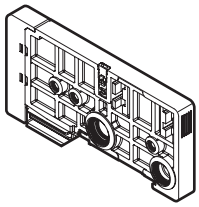

Ⓗ Supply and exhaust block

● Internal pilot (Q)

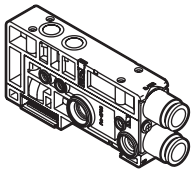

● External pilot (QK)

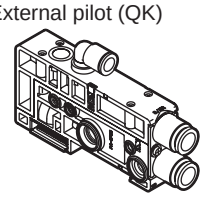

Ⓘ End block

Left side mount (EL)

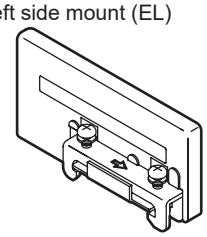

Right side mount (ER)

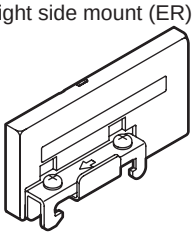

Related products — Related products

Ⓙ Related products

● Mounting rail

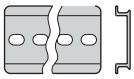

● Blanking plug

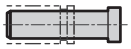

● Cable with D sub-connector

● Push-in cartridge fitting

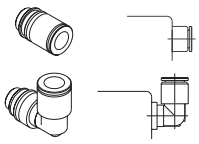

● Supply and exhaust block push-in cartridge fitting

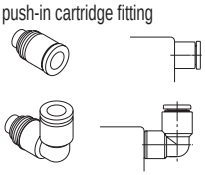

● ø1.8 barbed threaded fitting

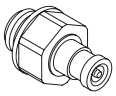

● Push-in fitting tube remover

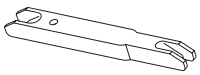

● Power feed connector/replacement fuse for T50 power supply terminal

Electrical section

Electrical block

N4E0 - ( ) - P70

Type of wiring block

Clean room specifications (clean room package)

Ⓐ D sub-connector (T30)

N4E0-T30-P70

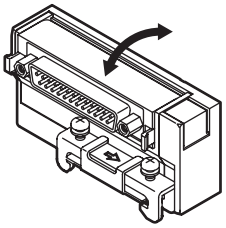

N4E0-T30R-P70

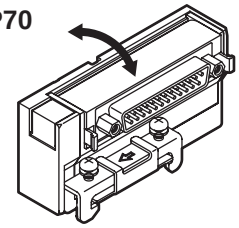

* D sub-connector can be faced up or down.

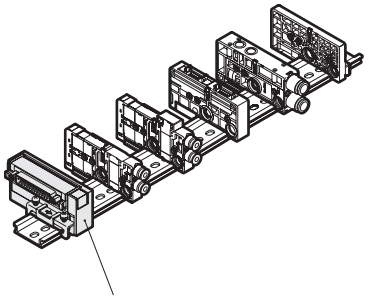

Ⓐ to Ⓔ Electrical block

Ⓑ Flat cable connector (T5*)

● With power supply terminal

N4E0-T50-P70

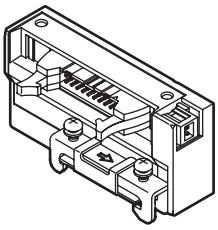

N4E0-T50R-P70

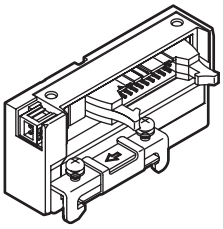

● Without power supply terminal

N4E0-T51-P70
N4E0-T52-P70
N4E0-T53-P70

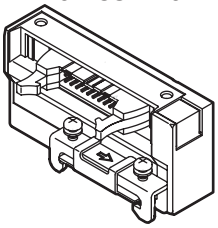

N4E0-T51R-P70
N4E0-T52R-P70
N4E0-T53R-P70

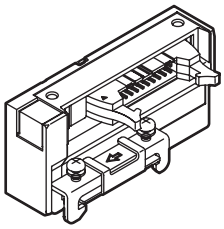

* The figure shows T51. T52 and T53 are different in the number of pins. (T51: 20 pins, T52: 10 pins, T53: 26 pins)

Ⓒ Intermediate electrical block

● RITS connector 6P × 2

N4E0-TMIA-P70

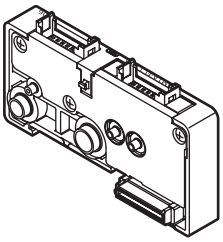

● RITS connector 6P

N4E0-TMIC-P70

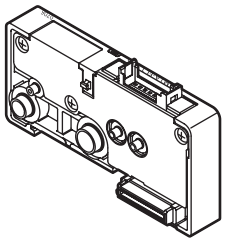

● 10 pin flat cable connector

N4E0-TM52-P70

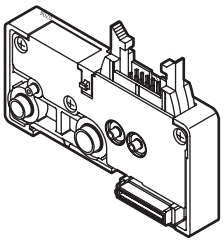

Ⓓ Serial transmission block (T6G1)

N4E0 - T6G1 - P70

Model No. — Ⓐ Type

Code	Content
Ⓐ Type	
T6G1	CC-Link 16 points

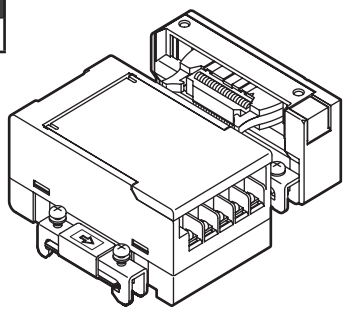

Ⓔ Serial transmission block (close contact) (T7*)

N4E0 - T7G2 - P70

Model No. — Ⓐ Type

Code	Content
Ⓐ Type	
T7D1	DeviceNet 16 points
T7D2	DeviceNet 32 points
T7G1	CC-Link 16 points
T7G2	CC-Link 32 points
T7N1	S-LINK V 16 points
T7N2	S-LINK V 32 points
T7EC1	EtherCAT 16 points
T7EC2	EtherCAT 32 points
T7ECT1	EtherCAT 16 points
T7ECT2	EtherCAT 32 points
T7EN1	EtherNet/IP 16 points
T7EN2	EtherNet/IP 32 points

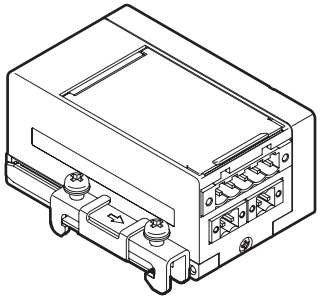

● Discrete serial transmission slave unit

4G - OPP3 - 1G - P70

Ⓐ Wiring method

Code	Description
Ⓐ Wiring method	
1G	CC-Link 16 points

*The slave unit is the same as the 4G Series.
Note that the model No. is "4G-*-*".

Piping section

Ⓕ Valve block

● Discrete valve block

N 3 E 00 1 0 - C3 - M W EF - 3 - P70

Model No.
Ⓐ Valve
Ⓑ Solenoid position
Ⓒ Port size
Ⓓ Manual operating device
Ⓔ Wiring method
Ⓕ Terminal and connector pin wiring
Ⓖ Option
Ⓗ Voltage

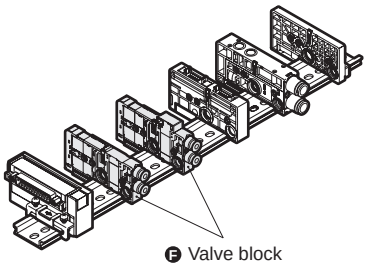

Code	Content	N3E00	N3E0	N4E00	N4E0
Ⓐ Valve/model No.					
N3E00	3-port valve or two 3-port valves integrated (7 mm pitch valve block)	●			
N3E0	3-port valve or two 3-port valves integrated (10 mm pitch valve block)		●		
N4E00	4-port valve (7 mm pitch valve block)			●	
N4E0	4-port valve (10 mm pitch valve block)				●
Ⓑ Solenoid position (*1)					
1	3-port valve: Single NC self reset (differential pressure spring return)	●	●		
11	3-port valve: Single NO self reset (differential pressure spring return)	●	●		
2	3-port valve: Double NC self holding	●	●		
21	3-port valve: Double NO self holding	●	●		
66	Dual 3-port valve integrated: A side valve: NC self reset (differential pressure return)	●	●		
66S	Dual 3-port valve integrated: B side valve: NC self reset (differential pressure spring return)	●	●		
67	Dual 3-port valve integrated: A side valve: NC self reset (differential pressure return)	●	●		
67S	Dual 3-port valve integrated: B side valve: NO self reset (differential pressure spring return)	●	●		
76	Dual 3-port valve integrated: A side valve: NO self reset (differential pressure return)	●	●		
76S	Dual 3-port valve integrated: B side valve: NC self reset (differential pressure spring return)	●	●		
77	Dual 3-port valve integrated: A side valve: NO self reset (differential pressure return)	●	●		
77S	Dual 3-port valve integrated: B side valve: NO self reset (differential pressure spring return)	●	●		
1	4-port valve: 2-position single self reset (differential pressure spring return)			●	●
2	4-port valve: 2-position double self hold			●	●
3	4-port valve: 3-position all ports closed				●
4	4-port valve: 3-position A/B/R connection				●
5	4-port valve: 3-position P/A/B connection				●
Ⓒ Port size					
CF	ø1.8 push-in fitting, Lateral (applicable tube UP-9402, EH-5802)		●		●
C18	ø1.8 push-in fitting, Lateral (applicable tube UP-9402, EH-5802)	●	●	●	●
CL18	ø1.8 push-in fitting, facing up (applicable tube UP-9402, EH-5802)	●	●	●	●
C3	ø3 push-in fitting, Lateral	●		●	
CL3	ø3 push-in fitting, facing up	●		●	
C4	ø4 push-in fitting, Lateral	●	●	●	●
CL4	ø4 push-in fitting, facing up	●	●	●	●
C6	ø6 push-in fitting, Lateral		●		●
CL6	ø6 push-in fitting, facing up		●		●
M3	M3 female thread (with non-rotation)	●		●	
M5	M5 female thread (with non-rotation)		●		●
C3N	ø1/8" push-in fitting lateral	●	●	●	●
CL3N	ø1/8" push-in fitting upward	●	●	●	●
C4N	ø5/32" push-in fitting lateral	●	●	●	●
CL4N	ø5/32" push-in fitting upward	●	●	●	●
Ⓓ Manual operating device					
Blank	Non-locking/locking common (with manual cover)	●	●	●	●
M	Manual override for non-locking (with manual cover)	●	●	●	●
Ⓔ Wiring method					
Refer to the following page about wiring method.		●	●	●	●
Ⓕ Terminal and connector pin wiring					
Blank	Standard wiring	●	●	●	●
W	Double wiring (for reduced wiring) (*2, *3)	●	●	●	●
Ⓖ Option					
Blank	None	●	●	●	●
E	Low-heat and energy saving circuit (*4, *5)	●	●	●	●
U	Built-in individual power supply function (AUX) (*5, *6)		●		●
A	Ozone proof (*7)		●		●
F	Built-in port A/B filter	●	●	●	●
Ⓗ Voltage					
3	24 VDC	●	●	●	●
4	12 VDC	●	●	●	●

● Push-in fitting Lateral

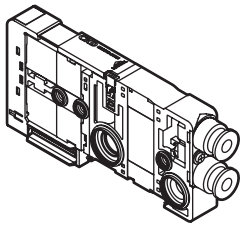

● Push-in fitting facing up

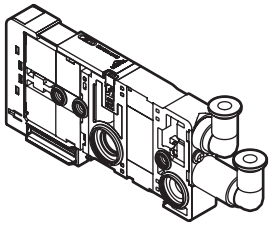

● Female thread (with non-rotation)

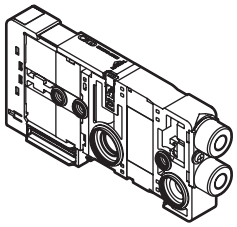

***1: For specifications of the self reset, refer to the precautions on page 412.**
*2: Double wiring is available only for the 2-position single solenoid valve.
*3: Double wiring is not available for a single unit of individual wiring valve block.
*4: N3E00 and N4E00 individual wiring is not available for the low exoergic/reduced wiring circuit type.
*5: Energizing is limited to the plus common. Also, "E" and "U" cannot be selected together.
*6: "U" is not available for individual wiring.
*7: Supported as standard for N3E00 and N4E00.

(Wiring method list)

Code		Content	Model No. N3E00	N3E0	N4E00	N4E0
Ⓔ Wiring method						
Blank		Valve block for reduced wiring	●	●	●	●
D2	Individual wiring	D connector lead wire length 300 mm	●	●	●	●
D20	Individual wiring	D connector lead wire length 500 mm	●	●	●	●
D21	Individual wiring	D connector lead wire length 1000 mm	●	●	●	●
D22	Individual wiring	D connector lead wire length 2000 mm	●	●	●	●
D23	Individual wiring	D connector lead wire length 3000 mm	●	●	●	●
D2N	Individual wiring	D connector without lead wire without socket	●	●	●	●
D3	Individual wiring	D connector without lead wire with socket/terminal	●	●	●	●

Ⓖ Dummy block

N4E0 - MPD - P70

Ⓐ Type

Ⓐ Type	
MPS	Single wiring
MPD	Double wiring

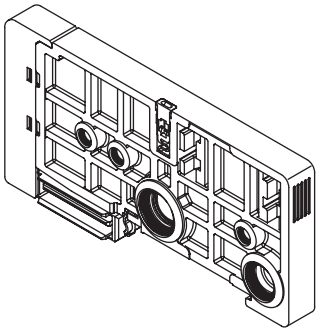

Piping section

Ⓗ Supply and exhaust block

- This block can be installed at any position adjacent to the valve block. (Generally, the block is installed on the right with the A/B (cylinder) port facing forward.)
- Supply the air for dual 3-port valve integrated with Q-6□ and 8□. (This cannot be used with the external pilot.)

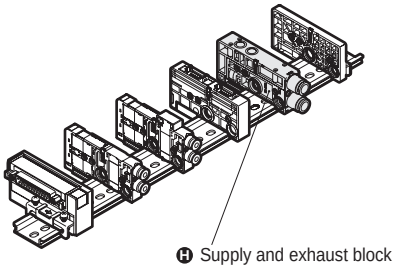

N4E0 - Q - 8 - SA - C - P70

Model No. Ⓐ Type Ⓑ Port size Ⓒ Option Ⓓ Wiring method

Ⓐ Type (*1)		Ⓑ Port size (port P/R) (*2)		Ⓒ Option (*3, *5)		Ⓓ Wiring method	
Q	Internal pilot	6	ø6 push-in fitting	Blank	Without partition	Blank	Internal wiring circuit selected
QK	External pilot	6L	ø6 push-in fitting Upward	S	P/R stop, PA/PR through	C	Without internal wiring circuit (*4)
QZ	Multi-pressure circuit (P, R only)	8	ø8 push-in fitting	SA	P/R/PA/PR locking		
QKZ	Multi-pressure circuit, external pilot (P, R, PA, PR separate)	8L	ø8 push-in fitting Upward				
		6N	ø1/4” push-in fitting				
		6LN	ø1/4” push-in fitting upward				
		8N	ø5/16” push-in fitting				
		8LN	ø5/16” push-in fitting upward				

*1: QZ cannot be used as discrete part. Use it with another type (Q/QK/QKZ).
*2: A filter for preventing entry of foreign matter is incorporated in P port.
*3: The manifold port is faced toward you to shield the flow path between the supply/exhaust block and the block on the right side. (Refer to the circuit diagram on page 410.)
Option Code
S: Blocks the 1 (P) and 3 (R) flow paths.
SA: Blocks the 1 (P), 3 (R), 12/14 (PA) and 82/84 (PR) flow paths.
*4: When using the wiring block with a [left + right] or [intermediate + right] combination, arrange the supply/exhaust block "without internal wiring circuit" between the left control station and the right control station.
*5: When the end block N4EO-ER is selected and the supply and exhaust block are installed adjacent to the left side, options S and SA cannot be selected.

- Q-8(N)
  QZ-8(N)

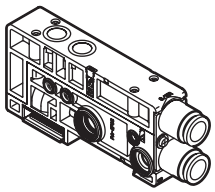

- Q-8L(N)
  QZ-8L(N)

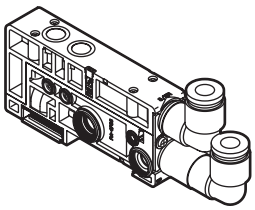

- QK-8(N)

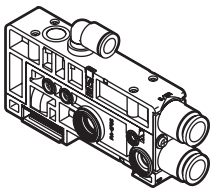

- QK-8L(N)

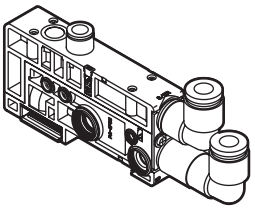

- QKZ-8(N)

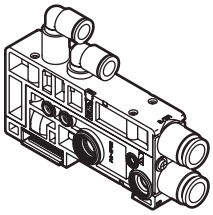

- QKZ-8L(N)

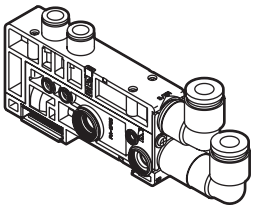

Ⓘ End block

- Mount the block on the left or right side with the piping port facing forward.

N4E0 - ER - P70

Model No. Ⓐ Type

Ⓐ Type	
EL	Left side mounting
ER	Right side mounting

- N4E0-EL

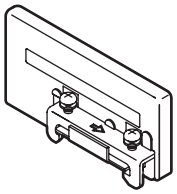

- N4E0-ER

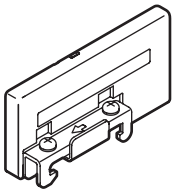

Ⓙ Related products

● Mounting rail
N4G-BAA [length]

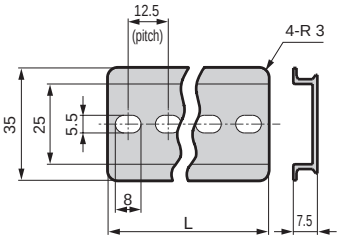

*Cannot be used with inch fitting specifications.

● Blanking plug (accessory)

PG-P2-B (for ø1.8)

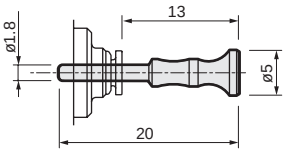

N4E00-JOINT-PP3MW (for ø3)

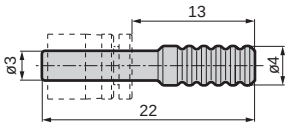

(for ø4, ø6, ø8)

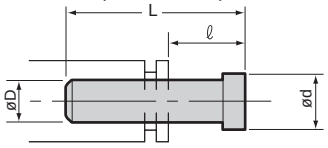

Model No.	D	L	ℓ	d
GWP4-B	ø4	27	16	6
GWP6-B	ø6	29	17	8
GWP8-B	ø8	33	17.5	10

● ø1.8 barbed fitting (10 pcs./set)

N4E0 - JOINT - PTN2-M5

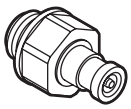

Code	Dimensions
PTN2-M3	Barbed fitting M3 screw-in
PTN2-M5	Barbed fitting M5 screw-in
PTN2-6	Barbed fitting R1/8

* Contact CKD separately regarding fiber tube.

● Push-in fitting tube remover

N4E0-EOT18-4 (for ø1.8, ø3, ø4)
N4S0-EOT4-6 (for ø3, ø4, ø6)

SCPD3
SCM
SSD2
MDC2
SMG
LCM
LCR
LCG
LCX
STM
STG
STR2
MRL2
GRC
Cylinder switch
MN3E MN4E
4GA/B
M4GA/B
MN4GA/B
F.R (module unit)
Clean F.R
Precision R
Press gauge Diff. press gauge
Electro-pneumatic R
Speed controller
Auxiliary valve
Fitting/ tube
Clean air unit
Pressure sensor
Flow rate sensor
Valve for air blow
Ending

Ⓚ Related products

● Push-in cartridge fitting

N4E00 - JOINT - C4 - P70

Dedicated for valve block.

Code	Dimensions
C18	ø1.8 push-in Cartridge fitting
C3	Push-in cartridge fitting for ø3 tube Cartridge fitting
C4	For ø4 tube Push-in cartridge fitting
CL18	ø1.8 short L type push-in Cartridge fitting
CL3	Short L type push-in cartridge fitting for ø3 tube Cartridge fitting
CL4	Short L type for ø4 tube Push-in cartridge fitting
CLL18	ø1.8 long L type push-in Cartridge fitting
CLL3	Long L type push-in cartridge fitting for ø3 tube Cartridge fitting
CLL4	Long L type for ø4 tube Push-in cartridge fitting
CPG	Plug cartridge
CP	Fitting fixing plate (with small machine screw for plate fixing)
CM3	M3 Cartridge fitting
CMB	M3 Plug cartridge (Rotation-stop plate for M3 fitting: CMP is necessary for fixing.)
CMP	Fitting rotation-stop plate for M3 (with small machine screw for plate fixing)
C3N	Push-in cartridge fitting for ø1/8" tube Cartridge fitting
C4N	For ø5/32" tube Push-in cartridge fitting
CL3N	Short L type push-in cartridge fitting for ø1/8" tube Cartridge fitting
CL4N	Short L type for ø5/32" tube Push-in cartridge fitting
CLL3N	Long L type push-in cartridge fitting for ø1/8" tube Cartridge fitting
CLL4N	Long L type for ø5/32" tube Push-in cartridge fitting

●Push-in cartridge fitting for supply and exhaust block

N4E0 - Q - JOINT - 8 - P70

For pilot pressure air supply (for PA), use the products for valve block shown above.

Code	Dimensions
6	For ø6 tube Push-in cartridge fitting
8	For ø8 tube Push-in cartridge fitting
6L	Short L type for ø6 tube Push-in cartridge fitting
8L	Short L type for ø8 tube Push-in cartridge fitting
6LL	Long L type for ø6 tube Push-in cartridge fitting
8LL	Long L type for ø8 tube Push-in cartridge fitting
6N	For ø1/4" tube Push-in cartridge fitting
8N	For ø5/16" tube Push-in cartridge fitting
6LN	Short L type for ø1/4" tube Push-in cartridge fitting
8LN	Short L type for ø5/16" tube Push-in cartridge fitting
6LLN	Long L type for ø1/4" tube Push-in cartridge fitting
8LLN	Long L type for ø5/16" tube Push-in cartridge fitting
P	Fitting fixing plate (with small machine screw for plate fixing)

N4E0 - JOINT - C4 - P70

Dedicated for valve block and supply/exhaust block port PA.
Cannot be used for ports P and R of supply and exhaust block.

Code	Dimensions
CF	ø1.8 barbed Cartridge fitting
C18	ø1.8 push-in Cartridge fitting
C4	For ø4 tube Push-in cartridge fitting
C6	For ø6 tube Push-in cartridge fitting
CL18	ø1.8 short L type push-in Cartridge fitting
CL4	Short L type for ø4 tube Push-in cartridge fitting
CL6	Short L type for ø6 tube Push-in cartridge fitting
CLL18	ø1.8 long L type push-in Cartridge fitting
CLL4	Long L type for ø4 tube Push-in cartridge fitting
CLL6	Long L type for ø6 tube Push-in cartridge fitting
CPG	Plug cartridge
CP	Fitting fixing plate (with small machine screw for plate fixing)
CM5	M5 cartridge fitting (Rotation-stop plate for M5 fitting: CMP is necessary for fixing.)
CMB	M5 plug cartridge (Rotation-stop plate for M5 fitting: CMP is necessary for fixing.)
CMP	Fitting rotation-stop plate for M5 (with small machine screw for plate fixing)
C3N	For ø1/8" tube Push-in cartridge fitting
C4N	For ø5/32" tube Push-in cartridge fitting
CL3N	Short L type for ø1/8" tube Push-in cartridge fitting
CL4N	Short L type for ø5/32" tube Push-in cartridge fitting
CLL3N	Long L type for ø1/8" tube Push-in cartridge fitting
CLL4N	Long L type for ø5/32" tube Push-in cartridge fitting

Ⓚ Related products

● Socket assembly for power supply (for individual wiring, AUX)

N4E0 - SOCKET - D - 300 - P70

Ⓐ Type *1 Ⓑ Lead wire length

Ⓐ Type	
S	2 wires (for single solenoid)
D	3 wires (for double solenoid)
Ⓑ Lead wire length	
300	300mm
500	500mm
1000	1000mm
2000	2000mm
3000	3000mm

*1: The model No. without lead wire is 3M0-SOCKET-SET.
(3 contacts attached, applicable wire diameter: AWG#26 to 28)

N4E00 - SOCKET - D - 300 - P70

Ⓐ Type *1 Ⓑ Lead wire length

Ⓐ Type	
S	2 wires (for single solenoid)
D	3 wires (for double solenoid)
Ⓑ Lead wire length	
300	300mm
500	500mm
1000	1000mm
2000	2000mm
3000	3000mm

*1: The model No. without lead wire is N4E00-SOCKET-SET.
(3 contacts attached, applicable wire diameter: AWG#26 to 28)

● Connector for wiring block TM1 (RITS connector 6P)

N4E0-TM-CONNECTOR-P70 Tyco Electronics Japan G.K. RITS connector 6P (part No.: 1473562-6)

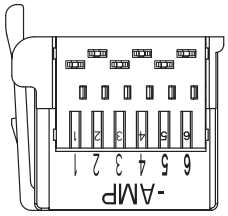

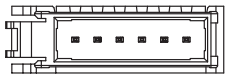

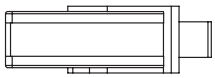

・Compatible wire (Tin-plated wire recommended)

Sheath finished O.D.	Ref. wire X-sectional area	No. of strands/diameter
mm	mm^2	No./mm
ø1.0 to 1.15	ø0.2 to 0.3	up to 60/0.08

For the detailed specifications of applicable wires,
confirm with * below.
*Tyco Electronics Japan, LLC.
Product Information Center
TEL 044-844-8052
URL http://www.te.com/jpn-ja/about-te/our-company/te-japan.html
・Dedicated crimping tool 1729940-1

● Feed connector for power supply terminal for T50

N4E0-T50-CONNECTOR-P70

(Compatible wires AWG28-20 / 0.08 to 0.5mm^2
(Commercially available WAGO connector plug 733-102))

● Replacement fuse for T50

4T9-LM16-P70

(LM16, Daito Comm. Apparatus Co., Ltd.)

● Communication connector for T7D

MSTB2.5/5 - STF - 5.08AUM

Phoenix Contact (Part No.: 5880008)

● Communication connector for T7G and T7N

BLZP5.08HC/05/180F SN OR BX Weidmüller Corp. (Part No.: 194412)

● Power supply connector for T7D, T7G, T7N

BL3.5/2F Weidmüller Corp. (Part No.: 160664)

MEMO

D-sub connector: Wiring method T30(N)

T30(N) connector

Connectors used for T30(N) wiring, called a D sub-connector, is used widely for FA and OA devices. The 25P is an RS232C Standards designated connector especially used for personal computer communication.

■ The manifold station No. are counted as station 1, station 2, station 3, and so forth starting from the wiring block side. The counting direction is opposite for the T30(N) and T30(N)R.

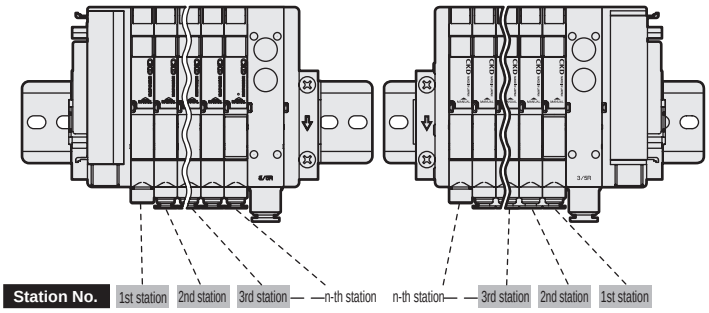

Precautions for connector T30(N)

(1) Signal arrays of the PLC output unit must match signal arrays of the valve side.
(2) The working power is 12/24 VDC dedicated.
(3) A voltage drop may occur due to simultaneous application of power or depending on the cable length. Confirm that the voltage drop for the solenoid is within 10% of the rated voltage.

* When using the valve block with individual power supply function (AUX), with low exoergic or energy saving circuit, energizing is limited to the plus common.

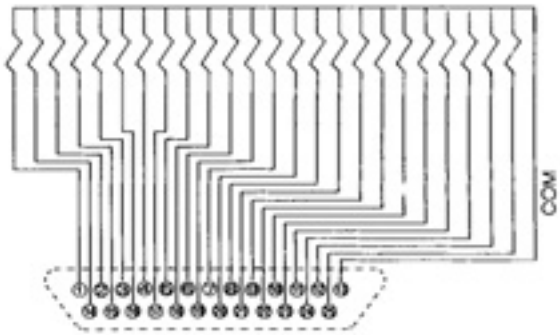

T30(N) connector pin array (example)

*1 The numbers of valve No. (1a, 1b, 2a, 2b ...) indicate the order of stations (first station, second station, ...) and the alphabets a and b indicate the a side solenoid valve and b side solenoid valve respectively. The maximum number of stations varies depending on the model No. Check the individual specifications.

Connector pin No.

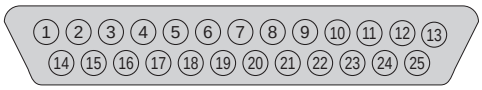

[Standard wiring]

● For single solenoid valve

Pin No.	1	2	3	4	5	6	7	8	9	10	11	12	13
Valve No.	1a	3a	5a	7a	9a	11a	13a	15a	17a	19a	21a	23a	COM
Pin No.	**14**	**15**	**16**	**17**	**18**	**19**	**20**	**21**	**22**	**23**	**24**	**25**	
Valve No.	2a	4a	6a	8a	10a	12a	14a	16a	18a	20a	22a	24a	

● For double solenoid valve

Pin No.	1	2	3	4	5	6	7	8	9	10	11	12	13
Valve No.	1a	2a	3a	4a	5a	6a	7a	8a	9a	10a	11a	12a	COM
Pin No.	**14**	**15**	**16**	**17**	**18**	**19**	**20**	**21**	**22**	**23**	**24**	**25**	
Valve No.	1b	2b	3b	4b	5b	6b	7b	8b	9b	10b	11b	12b	

● For mixed use (single/double solenoid mixture)

Pin No.	1	2	3	4	5	6	7	8	9	10	11	12	13
Valve No.	1a	3a	4a	5a	7a	8a	10a	11b	12b	14a	15b	17a	COM
Pin No.	**14**	**15**	**16**	**17**	**18**	**19**	**20**	**21**	**22**	**23**	**24**	**25**	
Valve No.	2a	3b	4b	6a	7b	9a	11a	12a	13a	15a	16a	17b	

[Double wiring]

Pin No.	1	2	3	4	5	6	7	8	9	10	11	12	13
Valve No.	1a	2a	3a	4a	5a	6a	7a	8a	9a	10a	11a	12a	COM
Pin No.	**14**	**15**	**16**	**17**	**18**	**19**	**20**	**21**	**22**	**23**	**24**	**25**	
Valve No.	(Void)	(Void)	(Void)	(Void)	(Void)	(Void)	(Void)	(Void)	(Void)	(Void)	(Void)	(Void)	

Pin No.	1	2	3	4	5	6	7	8	9	10	11	12	13
Valve No.	1a	2a	3a	4a	5a	6a	7a	8a	9a	10a	11a	12a	COM
Pin No.	**14**	**15**	**16**	**17**	**18**	**19**	**20**	**21**	**22**	**23**	**24**	**25**	
Valve No.	(Void)	(Void)	3b	4b	(Void)	(Void)	7b	(Void)	(Void)	(Void)	11b	12b	

Technical data ❶ Notes when wiring: D sub-connector type

How to order cable with D sub-connector

N4T - CABLE - D 0 0 - 1 - P70

* Each pneumatic valve model can be used for D sub-connector T30(N).

Ⓐ User side connection

Ⓑ Cable length

Code	Model N4T
Ⓐ User side connection	
0	Cutting only
1	With round terminal for M3.5 screw
Ⓑ Cable length	
1	1 m
3	3 m
5	5 m

D sub-connector terminal No. and conductor

● N4T-CABLE-D00-Ⓑ

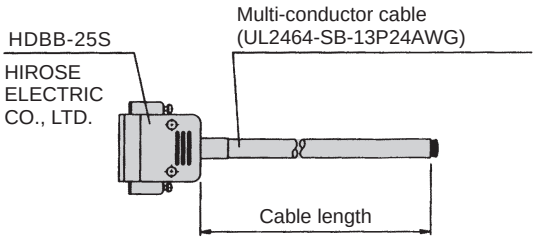

D sub-connector terminal No.		1	2	3	4	5	6	7	8	9	10	11	12	13
Conductor	Insulator color	Orange	Orange	Yellow	Yellow	Green	Green	Gray	Gray	White	White	Orange	Orange	Yellow
	Mark type	1 point	1 point	1 point	1 point	1 point	1 point	1 point	1 point	1 point	1 point	2 point	2 point	2 point
	Mark color	Black	Red	Black	Red	Black	Red	Black	Red	Black	Red	Black	Red	Black
D sub-connector terminal No.		**14**	**15**	**16**	**17**	**18**	**19**	**20**	**21**	**22**	**23**	**24**	**25**	
Conductor	Insulator color	Yellow	Green	Green	Gray	Gray	White	White	Orange	Orange	Yellow	Yellow	Green	
	Mark type	2 point	2 point	2 point	2 point	2 point	2 point	2 point	3 point	3 point	3 point	3 point	3 point	
	Mark color	Red	Black	Red	Black	Red	Black	Red	Black	Red	Black	Red	Black	

● N4T-CABLE-D01-Ⓑ

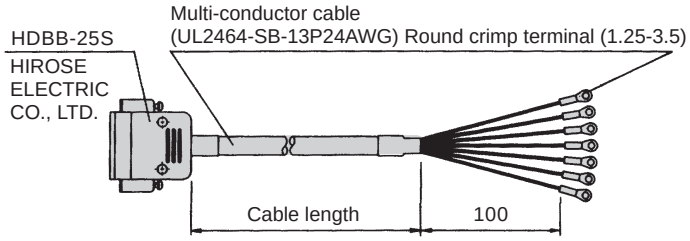

D sub-connector terminal No.		1	2	3	4	5	6	7	8	9	10	11	12	13
Conductor	Insulator color	Orange	Orange	Yellow	Yellow	Green	Green	Gray	Gray	White	White	Orange	Orange	Yellow
	Mark type	1 point	1 point	1 point	1 point	1 point	1 point	1 point	1 point	1 point	1 point	2 point	2 point	2 point
	Mark color	Black	Red	Black	Red	Black	Red	Black	Red	Black	Red	Black	Red	Black
Mark tube No.		1	2	3	4	5	6	7	8	9	10	11	12	13
D sub-connector terminal No.		**14**	**15**	**16**	**17**	**18**	**19**	**20**	**21**	**22**	**23**	**24**	**25**	
Conductor	Insulator color	Yellow	Green	Green	Gray	Gray	White	White	Orange	Orange	Yellow	Yellow	Green	
	Mark type	2 point	2 point	2 point	2 point	2 point	2 point	2 point	3 point	3 point	3 point	3 point	3 point	
	Mark color	Red	Black	Red	Black	Red	Black	Red	Black	Red	Black	Red	Black	
Mark tube No.		14	15	16	17	18	19	20	21	22	23	24	25	

* Available for up to 24 points. Cut the wires for surplus points before use.

Flat cable connector: Wiring method T50

T50 connector

The connector used for T50 wiring method complies with MIL Standards (MIL-C-83503).
Wiring work is simplified with the pressure welded flat cable.
Pin No. is assigned differently based on the PLC manufacturer, but the function assignment is the same. Layout using connectors and the triangular mark (▼) shown below as a reference. The ▼ mark is the reference for both the plug and socket.

Precautions for connector T50

(1) Signal arrays of the PLC output unit must match signal arrays of the valve side. Direct connections with the PLC are limited. Use the dedicated cable for each PLC manufacturer.
(2) The working power is 12/24 VDC dedicated.
(3) When connecting the T50 to a general output unit, use the + terminal (20, 10) of the 20P connector as the + side common, and use the NPN transistor output open collector for the drive circuit.
(4) Do not connect this manifold to the input unit as major faults could occur in this device and in peripherals. Connect this manifold to the output unit.
(5) The voltage could drop because of simultaneous energizing or the cable length. Confirm that the voltage drop for the solenoid is within 10% of the rated voltage.

■ The manifold station No. are counted as station 1, station 2, station 3, and so forth starting from the wiring block side. The counting direction is opposite for the T50 and T50R.

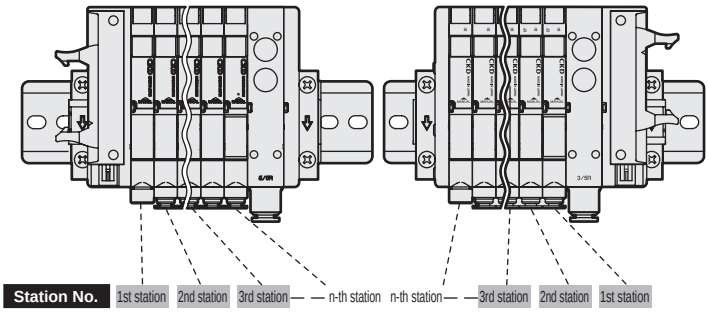

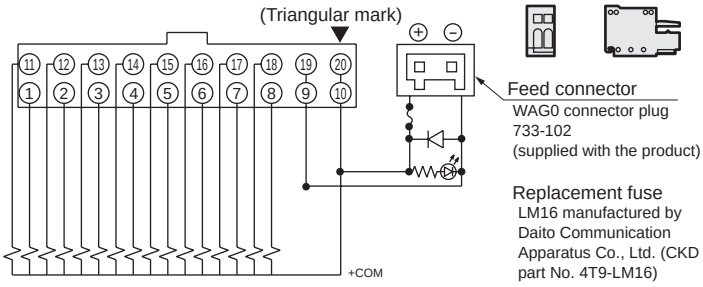

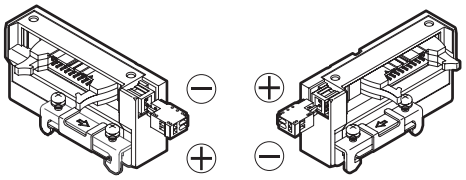

Polarity of feed connector

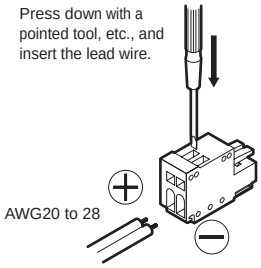

Cable connection

T50 connector pin array (example)

*1 The numbers of valve No. (1a, 1b, 2a, 2b ...) indicate the order of stations (first station, second station, ...) and the alphabets a and b indicate the a side solenoid valve and b side solenoid valve respectively. The maximum number of stations varies depending on the model No. Check the individual specifications.

Connector pin No.

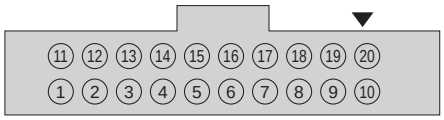

[Standard wiring]

● For single solenoid valve

Pin No.	11	12	13	14	15	16	17	18	19	20
Valve No.	9a	10a	11a	12a	13a	14a	15a	16a	-power supply	+power supply
Pin No.	**1**	**2**	**3**	**4**	**5**	**6**	**7**	**8**	**9**	**10**
Valve No.	1a	2a	3a	4a	5a	6a	7a	8a	-power supply	+power supply

● For double solenoid valve

Pin No.	11	12	13	14	15	16	17	18	19	20
Valve No.	5a	5b	6a	6b	7a	7b	8a	8b	-power supply	+power supply
Pin No.	**1**	**2**	**3**	**4**	**5**	**6**	**7**	**8**	**9**	**10**
Valve No.	1a	1b	2a	2b	3a	3b	4a	4b	-power supply	+power supply

● For mixed use (single/double solenoid mixture)

Pin No.	11	12	13	14	15	16	17	18	19	20
Valve No.	7a	7b	8a	9a	10a	10b	11a	11b	-power supply	+power supply
Pin No.	**1**	**2**	**3**	**4**	**5**	**6**	**7**	**8**	**9**	**10**
Valve No.	1a	2a	3a	3b	4a	4b	5a	6a	-power supply	+power supply

[Double wiring]

Pin No.	11	12	13	14	15	16	17	18	19	20
Valve No.	5a	(Void)	6a	(Void)	7a	(Void)	8a	(Void)	-power supply	+power supply
Pin No.	**1**	**2**	**3**	**4**	**5**	**6**	**7**	**8**	**9**	**10**
Valve No.	1a	(Void)	2a	(Void)	3a	(Void)	4a	(Void)	-power supply	+power supply

Pin No.	11	12	13	14	15	16	17	18	19	20
Valve No.	5a	(Void)	6a	(Void)	7a	7b	8a	(Void)	-power supply	+power supply
Pin No.	**1**	**2**	**3**	**4**	**5**	**6**	**7**	**8**	**9**	**10**
Valve No.	1a	(Void)	2a	(Void)	3a	3b	4a	4b	-power supply	+power supply

Flat cable connector: Wiring method T51

T51 connector

The connector used for T51 wiring method complies with MIL Standards (MIL-C-83503).
Wiring work is simplified with the pressure welded flat cable. Pin numbers are assigned differently based on the PLC manufacturer, but the function assignment is the same. Layout using connectors and the triangular mark (▼) shown below as a reference. The (▼) mark is the reference for both the plug and socket.

■ The manifold station No. are counted as station 1, station 2, station 3, and so forth starting from the wiring block side. The counting direction is opposite for the T51 and T51R.

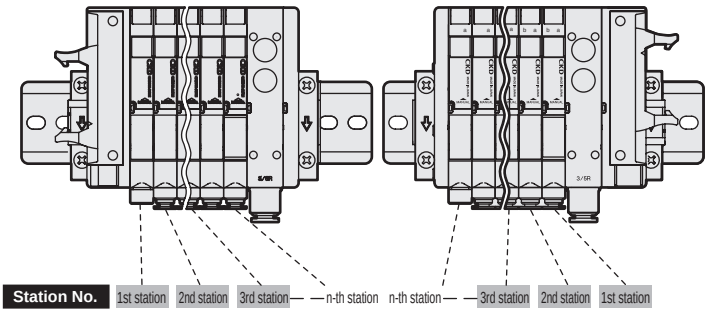

Precautions for connector (T51)

(1) Signal arrays of the PLC output unit must match signal arrays of the valve side.
(2) The working power is 12/24 VDC dedicated.
(3) The T51 is driven with a general output unit.
(4) Do not connect this manifold to the input unit as major faults could occur in this device and in peripherals. Connect this manifold to the output unit.
(5) The voltage could drop because of simultaneous energizing or the cable length. Confirm that the voltage drop for the solenoid is within 10% of the rated voltage.

* When using the valve block with individual power supply function (AUX), with low exoergic or energy saving circuit, energizing is limited to the plus common.

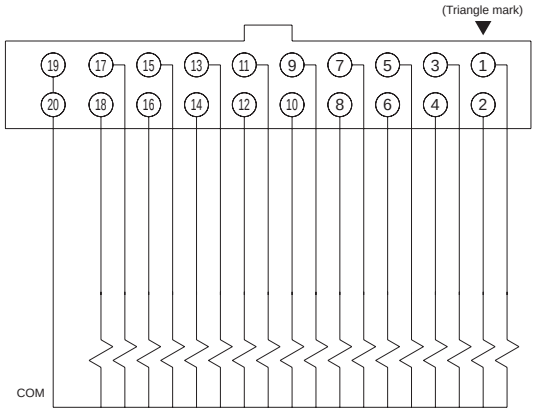

T51 connector pin array (example)

*1 The numbers of valve No. (1a, 1b, 2a, 2b ...) indicate the order of stations (first station, second station, ...) and the alphabets a and b indicate the a side solenoid valve and b side solenoid valve respectively. The maximum number of stations varies depending on the model No. Check the individual specifications.

Connector pin No.

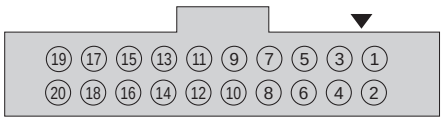

[Standard wiring]

● For single solenoid valve

Pin No.	19	17	15	13	11	9	7	5	3	1
Valve No.	COM	17a	15a	13a	11a	9a	7a	5a	3a	1a
Pin No.	**20**	**18**	**16**	**14**	**12**	**10**	**8**	**6**	**4**	**2**
Valve No.	COM	18a	16a	14a	12a	10a	8a	6a	4a	2a

● For double solenoid valve

Pin No.	19	17	15	13	11	9	7	5	3	1
Valve No.	COM	9a	8a	7a	6a	5a	4a	3a	2a	1a
Pin No.	**20**	**18**	**16**	**14**	**12**	**10**	**8**	**6**	**4**	**2**
Valve No.	COM	9b	8b	7b	6b	5b	4b	3b	2b	1b

● For mixed use (single/double solenoid mixture)

Pin No.	19	17	15	13	11	9	7	5	3	1
Valve No.	COM	12a	11a	10a	8a	7a	5a	4a	3a	1a
Pin No.	**20**	**18**	**16**	**14**	**12**	**10**	**8**	**6**	**4**	**2**
Valve No.	COM	13a	11b	10b	9a	7b	6a	4b	3b	2a

[Double wiring]

● For single solenoid valve

Pin No.	19	17	15	13	11	9	7	5	3	1
Valve No.	COM	9a	8a	7a	6a	5a	4a	3a	2a	1a
Pin No.	**20**	**18**	**16**	**14**	**12**	**10**	**8**	**6**	**4**	**2**
Valve No.	COM	(Void)	(Void)	(Void)	(Void)	(Void)	(Void)	(Void)	(Void)	(Void)

● For mixed use (single/double solenoid mixture)

Pin No.	19	17	15	13	11	9	7	5	3	1
Valve No.	COM	9a	8a	7a	6a	5a	4a	3a	2a	1a
Pin No.	**20**	**18**	**16**	**14**	**12**	**10**	**8**	**6**	**4**	**2**
Valve No.	COM	(Void)	(Void)	7b	(Void)	(Void)	4b	3b	(Void)	(Void)

Flat cable connector: Wiring method T52

T52 connector

The connector used for T52 wiring method complies with MIL Standards (MIL-C-83503).
Wiring work is simplified with the pressure welded flat cable. Pin numbers are assigned differently based on the PLC manufacturer, but the function assignment is the same. Layout using connectors and the triangular mark (▼) shown below as a reference. The (▼) mark is the reference for both the plug and socket.

* When using the valve block with individual power supply function (AUX), with low exoergic or energy saving circuit, energizing is limited to the plus common.

Connector pin array diagram (TOP VIEW) and internal circuit diagram

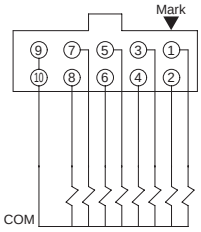

Precautions for connector (T52)

(1) Signal arrays of the PLC output unit must match signal arrays of the valve side.
(2) The working power is 12/24 VDC dedicated.
(3) The T52 is driven with a general output unit.
(4) Do not connect this manifold to the input unit as major faults could occur in this device and in peripherals. Connect this manifold to the output unit.
(5) The voltage could drop because of simultaneous energizing or the cable length. Confirm that the voltage drop for the solenoid is within 10% of the rated voltage.

■ The manifold station No. are counted as station 1, station 2, station 3, and so forth starting from the wiring block side. The counting direction is opposite for the T52 and T52R.

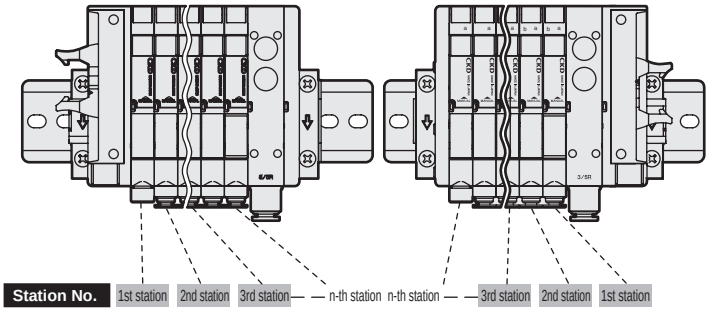

T52 connector pin array (example)

*1 The numbers of valve No. (1a, 1b, 2a, 2b ...) indicate the order of stations (first station, second station, ...) and the alphabets a and b indicate the a side solenoid valve and b side solenoid valve respectively. The maximum number of stations varies depending on the model No. Check the individual specifications.

Connector pin No.

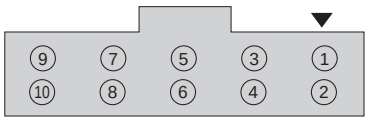

● For single solenoid valve

[Standard wiring]

Pin No.	9	7	5	3	1
Valve No.	COM	7a	5a	3a	1a
Pin No.	**10**	**8**	**6**	**4**	**2**
Valve No.	COM	8a	6a	4a	2a

[Double wiring]

Pin No.	9	7	5	3	1
Valve No.	COM	4a	3a	2a	1a
Pin No.	**10**	**8**	**6**	**4**	**2**
Valve No.	COM	(Void)	(Void)	(Void)	(Void)

● For double solenoid valve

Pin No.	9	7	5	3	1
Valve No.	COM	4a	3a	2a	1a
Pin No.	**10**	**8**	**6**	**4**	**2**
Valve No.	COM	4b	3b	2b	1b

● For mixed use (single/double solenoid mixture)

Pin No.	9	7	5	3	1
Valve No.	COM	5b	4b	3a	1a
Pin No.	**10**	**8**	**6**	**4**	**2**
Valve No.	COM	6a	5a	4a	2a

Pin No.	9	7	5	3	1
Valve No.	COM	4a	3a	2a	1a
Pin No.	**10**	**8**	**6**	**4**	**2**
Valve No.	COM	4b	(Void)	(Void)	(Void)

SCPD3
SCM
MDC2
SMG
SSD2
STM
STG
LCR
LCG
LCX
LCM
STR2
MRL2
GRC
Cylinder switch
MN3E MN4E
4GA/B
M4GA/B
MN4GA/B
F.R.(module unit)
Clean F.R.
Precision R
Press gauge Diff. press gauge
Electro-pneumatic R
Speed controller
Auxiliary valve
Fitting/ tube
Clean air unit
Pressure sensor
Flow rate sensor
Valve for air blow
Ending

Flat cable connector: Wiring method T53

T53 connector

The connector used for T53 wiring method complies with MIL Standards (MIL-C-83503).
Wiring work is simplified with the pressure welded flat cable. Pin numbers are assigned differently based on the PLC manufacturer, but the function assignment is the same. Layout using connectors and the triangular mark (▼) shown below as a reference. The (▼) mark is the reference for both the plug and socket.

* When using the valve block with individual power supply function (AUX), with low exoergic or energy saving circuit, energizing is limited to the plus common.

Connector pin layout diagram (TOP VIEW) and internal circuit diagram

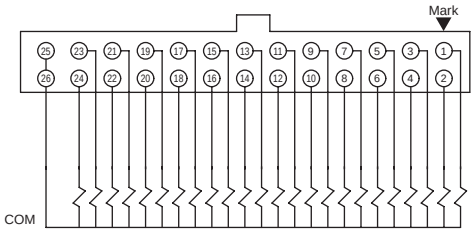

Precautions for connector (T53)

(1) Signal arrays of the PLC output unit must match signal arrays of the valve side.
(2) The working power is 12/24 VDC dedicated.
(3) The T53 is driven with a general output unit.
(4) Do not connect this manifold to the input unit as major faults could occur in this device and in peripherals. Connect this manifold to the output unit.
(5) The voltage could drop because of simultaneous energizing or the cable length. Confirm that the voltage drop for the solenoid is within 10% of the rated voltage.

■ The manifold stations are counted as station 1, station 2, station 3 and so forth starting from the wiring block side. The counting direction is opposite for the T53 and T53R.

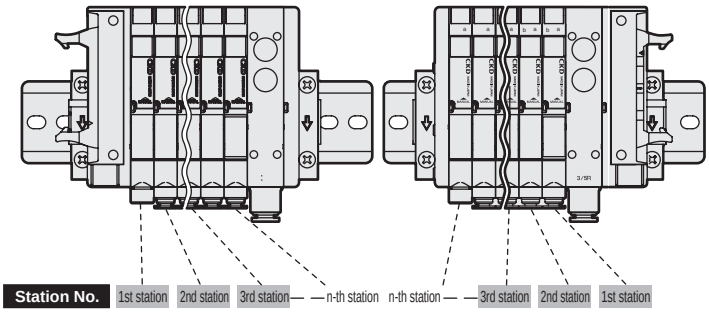

T53 connector pin array (example)

*1 The numbers of valve No. (1a, 1b, 2a, 2b ...) indicate the order of stations (first station, second station, ...) and the alphabets a and b indicate the a side solenoid valve and b side solenoid valve respectively. The maximum number of stations varies depending on the model No. Check the individual specifications.

Connector pin No.

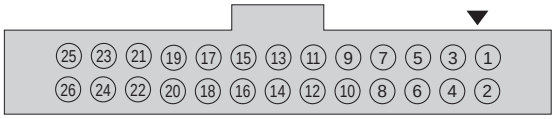

[Standard wiring]

● For single solenoid valve

Pin No.	25	23	21	19	17	15	13	11	9	7	5	3	1
Valve No.	COM	23a	21a	19a	17a	15a	13a	11a	9a	7a	5a	3a	1a
Pin No.	**26**	**24**	**22**	**20**	**18**	**16**	**14**	**12**	**10**	**8**	**6**	**4**	**2**
Valve No.	COM	24a	22a	20a	18a	16a	14a	12a	10a	8a	6a	4a	2a

[Double wiring]

Pin No.	25	23	21	19	17	15	13	11	9	7	5	3	1
Valve No.	COM	12a	11a	10a	9a	8a	7a	6a	5a	4a	3a	2a	1a
Pin No.	**26**	**24**	**22**	**20**	**18**	**16**	**14**	**12**	**10**	**8**	**6**	**4**	**2**
Valve No.	COM	(Void)	(Void)	(Void)	(Void)	(Void)	(Void)	(Void)	(Void)	(Void)	(Void)	(Void)	(Void)

● For double solenoid valve

Pin No.	25	23	21	19	17	15	13	11	9	7	5	3	1
Valve No.	COM	12a	11a	10a	9a	8a	7a	6a	5a	4a	3a	2a	1a
Pin No.	**26**	**24**	**22**	**20**	**18**	**16**	**14**	**12**	**10**	**8**	**6**	**4**	**2**
Valve No.	COM	12b	11b	10b	8b	8b	7b	6b	5b	4b	3b	2b	1b

● For mixed use (single/double solenoid mixture)

Pin No.	25	23	21	19	17	15	13	11	9	7	5	3	1
Valve No.	COM	16a	15a	14a	12a	10a	9a	8a	7a	5b	4b	3a	1a
Pin No.	**26**	**24**	**22**	**20**	**18**	**16**	**14**	**12**	**10**	**8**	**6**	**4**	**2**
Valve No.	COM	16b	15b	14b	13a	11a	9b	8b	7b	6a	5a	4a	2a

Pin No.	25	23	21	19	17	15	13	11	9	7	5	3	1
Valve No.	COM	12a	11a	10a	9a	8a	7a	6a	5a	4a	3a	2a	1a
Pin No.	**26**	**24**	**22**	**20**	**18**	**16**	**14**	**12**	**10**	**8**	**6**	**4**	**2**
Valve No.	COM	(Void)	(Void)	(Void)	9b	8b	7b	(Void)	5b	4b	(Void)	(Void)	(Void)

Intermediate wiring block: Wiring method TM*

Precautions for TM wiring method

(1) Signal arrays of the PLC output unit must match signal arrays of the valve side.
(2) The working power is 12/24 VDC dedicated.
(3) The TM* is driven with a general output unit.
(4) Do not connect this manifold to the input unit as major faults could occur. Connect this manifold to the output unit.
(5) The voltage could drop because of simultaneous energizing or the cable length.
Confirm that the voltage drop for the solenoid is within 10% of the rated voltage.

* When using the valve block with individual power supply function (AUX), with low exoergic or energy saving circuit, energizing is limited to the plus common.

How to count stations

The manifold stations are counted from electrical block TM to the right with the wiring ports facing forward.

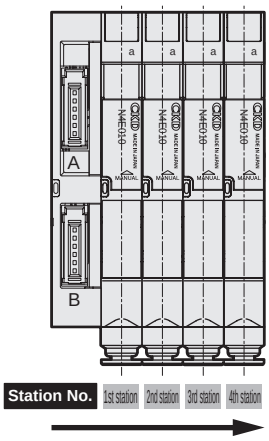

Wiring method TM1A

Connector for wiring method TM1A

RITS connector 6P (1473562-6) Tyco Electronics Japan G.K. made
The pin No. 1 to 6 are stamped on the connector. Input is allowed up to 10 points as shown below.

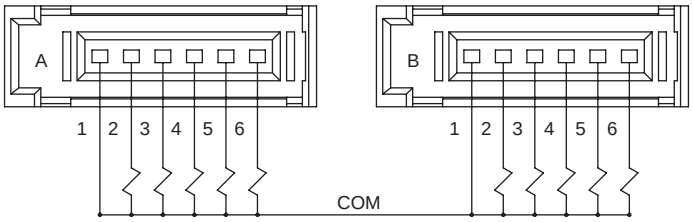

* When using the valve block with individual power supply function (AUX), with low exoergic or energy saving circuit, energizing is limited to the plus common.

TM1A connector pin array (example)

The numbers of valve No. (1a, 1b, 2a, 2b ...) indicate the order of stations (first station, second station, ...) and the alphabets a and b indicate the a side solenoid valve and b side solenoid valve respectively. The max. station No. of manifold differs based on the model, but there are a max. of 10 solenoid (coil) points.

[Standard wiring]

● For single solenoid valve

	Connector A						Connector B					
Pin No.	1	2	3	4	5	6	1	2	3	4	5	6
Valve No.	COM	1a	2a	3a	4a	5a	COM	6a	7a	8a	9a	10a

● For double solenoid valve

	Connector A						Connector B					
Pin No.	1	2	3	4	5	6	1	2	3	4	5	6
Valve No.	COM	1a	1b	2a	2b	3a	COM	3b	4a	4b	5a	5b

● For mixed use (single/double solenoid mixture)

	Connector A						Connector B					
Pin No.	1	2	3	4	5	6	1	2	3	4	5	6
Valve No.	COM	1a	2a	2b	3a	4a	COM	5a	5b	6a	7a	7b

[Double wiring]

	Connector A						Connector B					
Pin No.	1	2	3	4	5	6	1	2	3	4	5	6
Valve No.	COM	1a	(Void)	2a	(Void)	3a	COM	(Void)	4a	(Void)	5a	(Void)

	Connector A						Connector B					
Pin No.	1	2	3	4	5	6	1	2	3	4	5	6
Valve No.	COM	1a	(Void)	2a	2b	3a	COM	(Void)	4a	(Void)	5a	5b

Wiring method TM1C

Connector for wiring method TM1C

RITS connector 6P (1473562-6) manufactured by Tyco Electronics Japan G.K.
On the connector No. 1 to 6 is stamped on it. Input is allowed up to 5 points as shown below.

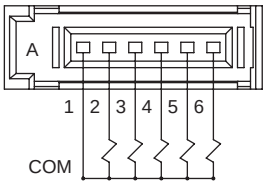

* When using the valve block with individual power supply function (AUX), with low exoergic or energy saving circuit, energizing is limited to the plus common.

TM1C connector pin array (example)

The numbers of valve No. (1a, 1b, 2a, 2b ...) indicate the order of stations (first station, second station, ...) and the alphabets a and b indicate the a side solenoid valve and b side solenoid valve respectively. The maximum station number of manifold differs based on the model, but the maximum is 5 solenoid (coil) points.

[Standard wiring]

● For single solenoid valve

Pin No.	1	2	3	4	5	6
Valve No.	COM	1a	2a	3a	4a	5a

● For double solenoid valve

Pin No.	1	2	3	4	5	6
Valve No.	COM	1a	1b	2a	2b	(Void)

● For mixed use (single/double solenoid mixture)

Pin No.	1	2	3	4	5	6
Valve No.	COM	1a	2a	2b	3a	4a

[Double wiring]

Pin No.	1	2	3	4	5	6
Valve No.	COM	1a	(Void)	2a	(Void)	(Void)

Pin No.	1	2	3	4	5	6
Valve No.	COM	1a	(Void)	2a	2b	3a

Wiring method TM52

Connector for wiring method TM52

MIL standards (MIL-C-83503) compatible 10 pin flat cable connector
Pin numbers 1 to 10 are set on the connector starting at the ▼ marked as shown below. Input is allowed up to 8 points.

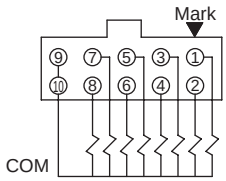

* When using the valve block with individual power supply function (AUX), with low exoergic or energy saving circuit, energizing is limited to the plus common.

TM52 connector pin array (example)

The numbers of valve No. (1a, 1b, 2a, 2b ...) indicate the order of stations (first station, second station, ...) and the alphabets a and b indicate the a side solenoid valve and b side solenoid valve respectively. The maximum station number of manifold differs based on the model, but the maximum is 8 solenoid (coil) points.

[Standard wiring]

● For single solenoid valve

Pin No.	1	2	3	4	5	6	7	8	9	10
Valve No.	1a	2a	3a	4a	5a	6a	7a	8a	COM	

● For double solenoid valve

Pin No.	1	2	3	4	5	6	7	8	9	10
Valve No.	1a	1b	2a	2b	3a	3b	4a	4b	COM	

● For mixed use (single/double solenoid mixture)

Pin No.	1	2	3	4	5	6	7	8	9	10
Valve No.	1a	2a	2b	3a	4a	5a	5b	6a	COM	

[Double wiring]

Pin No.	1	2	3	4	5	6	7	8	9	10
Valve No.	1a	(Void)	2a	(Void)	3a	(Void)	4a	(Void)	COM	

Pin No.	1	2	3	4	5	6	7	8	9	10
Valve No.	1a	(Void)	2a	2b	3a	(Void)	4a	(Void)	COM	

Wiring block mix

How to count stations

With the piping port facing toward you, the manifold station numbers are counted

- Left wiring blocks (T30, T50, T51, T52, T53)
- Intermediate electrical block (TM1A, TM1C, TM52)

} from left to right.

- Right wiring blocks (T30R, T50R, T51R, T52R, T53R) from right to left.

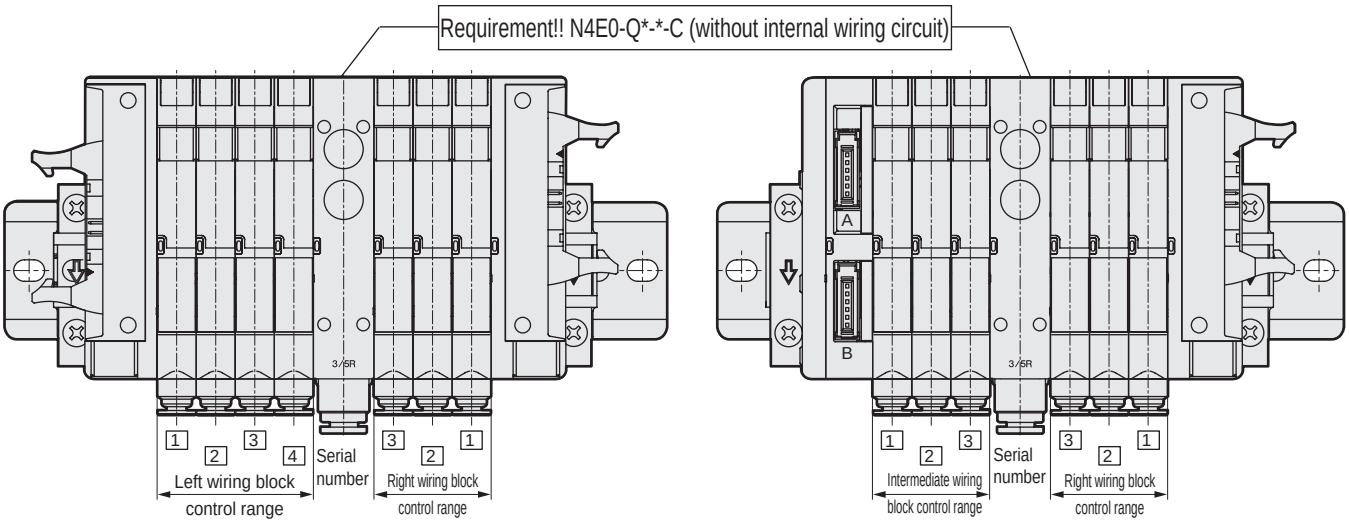

⚠ When mixing the right wiring block with another wiring block, the left/right wiring block circuits may connect via the manifold and result in unexpected valve operation. Be sure to install the “N4E0-Q*-*-C type without supply and exhaust block internal wiring circuit” at the end of the right wiring block control station, so that the left and right wiring in the manifold are not connected.

MEMO

Serial transmission: Wiring method T6G1

T6G1 serial transmission

- The slave unit's output number differs with the manufacturer. The connector pin number and the manifold solenoid correspond as shown below.
- Station manifolds are set in order from the left with the piping port facing forward regardless of the electrical block position.
- Internal connectors are wired in order, so there may be some void numbers depending on the number of stations. These void outputs cannot be used for drive other than the solenoid manifold in use.
- The power is limited to 24 VDC.
- A slave unit for each communication system is used. Contact CKD for the specifications on the usable PLC models, host unit models and communication systems. (Refer to page 404)
- Output No. is assigned differently based on the PLC manufacturer, but the function assignment is the same. Layout using connectors and the triangular mark (▼) shown below as a reference. The ▼ mark is the reference for both the plug and socket.

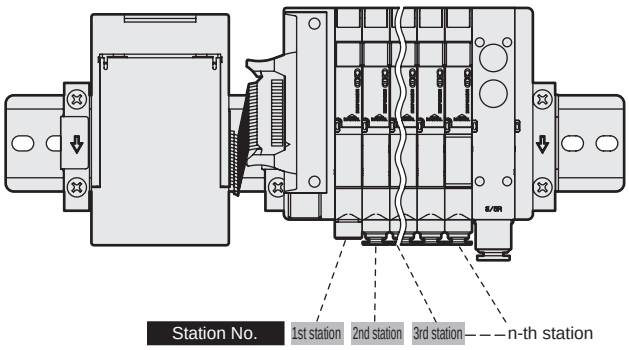

Correspondence of output No. and connector pin No.

● T6G1

Output No.	0	1	2	3	4	5	6	7	8	9	A	B	C	D	E	F
Connector pin No.	1	2	3	4	5	6	7	8	11	12	13	14	15	16	17	18

T6G1 connector pin array (example)

*1 The numbers of valve No. (1a, 1b, 2a, 2b ...) indicate the order of stations (first station, second station, ...) and the alphabets a and b indicate the a side solenoid valve and b side solenoid valve respectively. The maximum number of stations varies depending on the model No. Check the individual specifications.

Connector pin No.

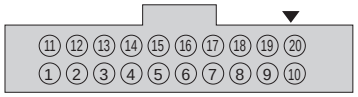

[Standard wiring]

● For single solenoid valve

Pin No.	11	12	13	14	15	16	17	18	19	20
Valve No.	9a	10a	11a	12a	13a	14a	15a	16a		+COM
Pin No.	**1**	**2**	**3**	**4**	**5**	**6**	**7**	**8**	**9**	**10**
Valve No.	1a	2a	3a	4a	5a	6a	7a	8a		+COM

[Double wiring]

Pin No.	11	12	13	14	15	16	17	18	19	20
Valve No.	5a	(Void)	6a	(Void)	7a	(Void)	8a	(Void)		+COM
Pin No.	**1**	**2**	**3**	**4**	**5**	**6**	**7**	**8**	**9**	**10**
Valve No.	1a	(Void)	2a	(Void)	3a	(Void)	4a	(Void)		+COM

● For double solenoid valve

Pin No.	11	12	13	14	15	16	17	18	19	20
Valve No.	5a	5b	6a	6b	7a	7b	8a	8b		+COM
Pin No.	**1**	**2**	**3**	**4**	**5**	**6**	**7**	**8**	**9**	**10**
Valve No.	1a	1b	2a	2b	3a	3b	4a	4b		+COM

● For mixed use (single/double solenoid mixture)

Pin No.	11	12	13	14	15	16	17	18	19	20
Valve No.	7a	7b	8a	9a	10a	10b	11a	11b		+COM
Pin No.	**1**	**2**	**3**	**4**	**5**	**6**	**7**	**8**	**9**	**10**
Valve No.	1a	2a	3a	3b	4a	4b	5a	6a		+COM

Pin No.	11	12	13	14	15	16	17	18	19	20
Valve No.	5a	(Void)	6a	(Void)	7a	7b	8a	(Void)		+COM
Pin No.	**1**	**2**	**3**	**4**	**5**	**6**	**7**	**8**	**9**	**10**
Valve No.	1a	(Void)	2a	(Void)	3a	3b	4a	4b		+COM

Technical data ❶ Notes when wiring: D sub-connector type

	LED display	Wiring method
T6G1	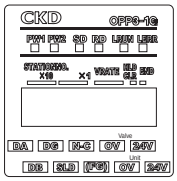	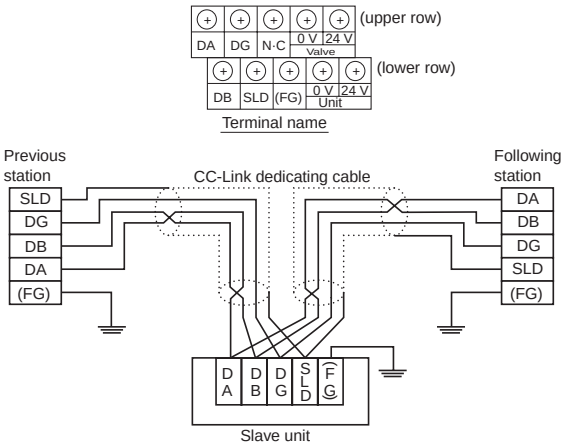

LED name	Display description
PW1	Lights when unit power is ON.
PW2	Lights when valve power is ON.
SD	Turns ON when sending data.
RD	Turns ON when receiving data.
L RUN	This stays ON when normal data is received and turns off when the time limit comes. (This stays ON when normal data is received.)
L ERR	This stays ON when a transmission error occurs. This turns off when the time limit comes. This stays ON when the station No. setting or transmission speed setting is incorrect. This flashes when the station No. setting or transmission speed setting changes midway.

Serial transmission: Wiring method T7*

T7* serial transmission

- The slave unit I/O numbers differ based on each PLC maker, so see the following tables.
- The slave unit I/O numbers correspond to the manifold solenoids as shown below.
- The solenoid valve manifold station numbers are set in order from left with the piping port facing forward.
- The power is limited to 24 VDC.
- A slave unit for each communication system is used. Contact CKD for the specifications on the usable PLC model nos., host unit model nos. and communication systems. (Refer to page 404)
- Securely tighten each connector (power/communication) after inserting into the product. Close the cover after completing the address settings, etc. (Recommended tightening torque: 0.25 N·m for power supply, 0.3 N·m for communication)

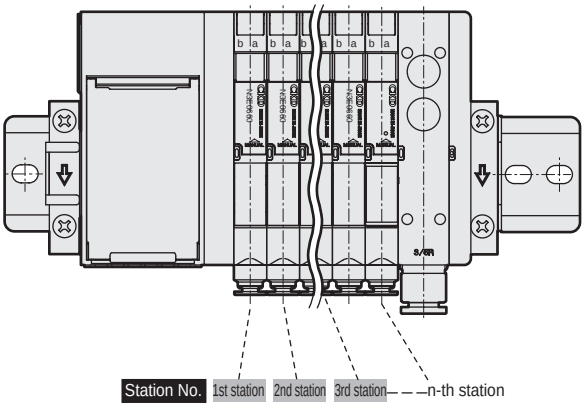

Correspondence of PLC address and serial transmission slave unit I/O No.

(1) Hexadecimal notation

Serial transmission slave unit I/O No.	0	1	2	3	4	5	6	7	8	9	10	11	12	13	14	15	16	17	18	19	20	21	22	23	24	25	26	27	28	29	30	31
CC-Link DeviceNet S-LINK V EtherCAT EtherNet/IP	Y00	Y01	Y02	Y03	Y04	Y05	Y06	Y07	Y08	Y09	Y0A	Y0B	Y0C	Y0D	Y0E	Y0F	Y10	Y11	Y12	Y13	Y14	Y15	Y16	Y17	Y18	Y19	Y1A	Y1B	Y1C	Y1D	Y1E	Y1F

(2) For decimal notation

Serial transmission slave unit I/O No.	0	1	2	3	4	5	6	7	8	9	10	11	12	13	14	15	16	17	18	19	20	21	22	23	24	25	26	27	28	29	30	31
CC-Link DeviceNet S-LINK V EtherCAT EtherNet/IP	Y0																Y1															
	00	01	02	03	04	05	06	07	08	09	10	11	12	13	14	15	00	01	02	03	04	05	06	07	08	09	10	11	12	13	14	15

Y** indicates output.

Solenoid output No. corresponding to serial transmission slave unit I/O No.

Slave unit	Max. solenoids	Serial transmission slave unit I/O No. 0	1	2	3	4	5	6	7	8	9	10	11	12	13	14	15	16	17	18	19	20	21	22	23	24	25	26	27	28	29	30	31
•T7G1 (CC-Link) •T7D1 (DeviceNet) •T7N1 (S-LINK V) •T7EC1 (EtherCAT) •T7EN1 (EtherNet/IP)	16 points	s1	s2	s3	s4	s5	s6	s7	s8	s9	s10	s11	s12	s13	s14	s15	s16																
•T7G2 (CC-Link) •T7D2 (DeviceNet) •T7N2 (S-LINK V) •T7EC2 (EtherCAT) •T7EN2 (EtherNet/IP)	32 points	s1	s2	s3	s4	s5	s6	s7	s8	s9	s10	s11	s12	s13	s14	s15	s16	s17	s18	s19	s20	s21	s22	s23	s24	s25	s26	s27	s28	s29	s30	s31	s32

Valve No. layout corresponding to wiring method T7* solenoid output No. (example)

* The numbers of valve No. (1a, 1b, 2a, 2b ...) indicate the order of stations (first station, second station, ...) and the alphabets a and b indicate the a side solenoid valve and b side solenoid valve respectively. Max. station No. differs depending on the model. Check the individual specifications.

[Standard wiring]

- For single solenoid valve (Max. 16 stations)

Solenoid valve output No.	s1	s2	s3	s4	s5	s6	s7	s8	s9	s10	s11	s12	s13	s14	s15	s16	s17	s18	s19	s20	s21	s22	s23	s24	s25	s26	s27	s28	s29	s30	s31	s32
Valve No.	1a	2a	3a	4a	5a	6a	7a	8a	9a	10a	11a	12a	13a	14a	15a	16a																

- For double solenoid valve

Solenoid valve output No.	s1	s2	s3	s4	s5	s6	s7	s8	s9	s10	s11	s12	s13	s14	s15	s16	s17	s18	s19	s20	s21	s22	s23	s24	s25	s26	s27	s28	s29	s30	s31	s32
Valve No.	1a	1b	2a	2b	3a	3b	4a	4b	5a	5b	6a	6b	7a	7b	8a	8b	9a	9b	10a	10b	11a	11b	12a	12b	13a	13b	14a	14b	15a	15b	16a	16b

- For mixed use (single/double mixture) (Max. 16 stations)

Solenoid valve output No.	s1	s2	s3	s4	s5	s6	s7	s8	s9	s10	s11	s12	s13	s14	s15	s16	s17	s18	s19	s20	s21	s22	s23	s24	s25	s26	s27	s28	s29	s30	s31	s32
Valve No.	1a	2a	3a	3b	4a	4b	5a	6a	7a	7b	8a	9a	10a	10b	11a	11b	12a	13a	14a	14b	15a	15b	16a									

[Double wiring]

- For single solenoid valve

Solenoid valve output No.	s1	s2	s3	s4	s5	s6	s7	s8	s9	s10	s11	s12	s13	s14	s15	s16	s17	s18	s19	s20	s21	s22	s23	s24	s25	s26	s27	s28	s29	s30	s31	s32
Valve No.	1a	(Void)	2a	(Void)	3a	(Void)	4a	(Void)	5a	(Void)	6a	(Void)	7a	(Void)	8a	(Void)	9a	(Void)	10a	(Void)	11a	(Void)	12a	(Void)	13a	(Void)	14a	(Void)	15a	(Void)	16a	(Void)

- For mixed use (single/double solenoid mixture)

Solenoid valve output No.	s1	s2	s3	s4	s5	s6	s7	s8	s9	s10	s11	s12	s13	s14	s15	s16	s17	s18	s19	s20	s21	s22	s23	s24	s25	s26	s27	s28	s29	s30	s31	s32
Valve No.	1a	(Void)	2a	(Void)	3a	3b	4a	4b	5a	(Void)	6a	(Void)	7a	7b	8a	(Void)	9a	(Void)	10a	(Void)	11a	11b	12a	12b	13a	(Void)	14a	(Void)	15a	15b	16a	(Void)

Technical data ❶ Notes when wiring: Serial transmission

T7D1 / T7D2

LED display

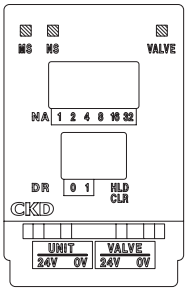

LED name	Display description
MS	Slave status is indicated with green and red LEDs. Errors are indicated using combinations with "NS LED".
NS	Network status is indicated with green and red LEDs. Errors are indicated using combinations with "MS LED".

Wiring method

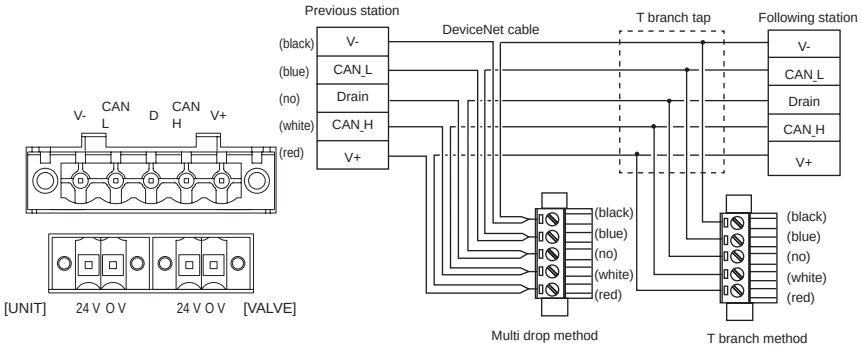

- Power is connected to the 2-pole connector.
- The DeviceNet cable is connected to the 5-pole connector.
- The power terminal (24 V, 0 V) is insulated from the communication power terminal (V+, V-).
- The wiring section connectors are enclosed.

T7G1 / T7G2

LED display

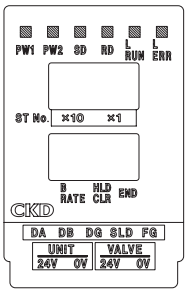

LED name	Display description
PW	Lights when power is ON.
SD	Lights when transmitting data.
RD	Lights when receiving data.
L RUN	This stays ON when normal data is received. This turns OFF when time is over.
L ERR	This stays ON when a transmission error occurs. Turns OFF when time over occurs. Lights when station No. or transmission speed setting fails. Blinks when station No. or transmission speed in setting changes.

Wiring method

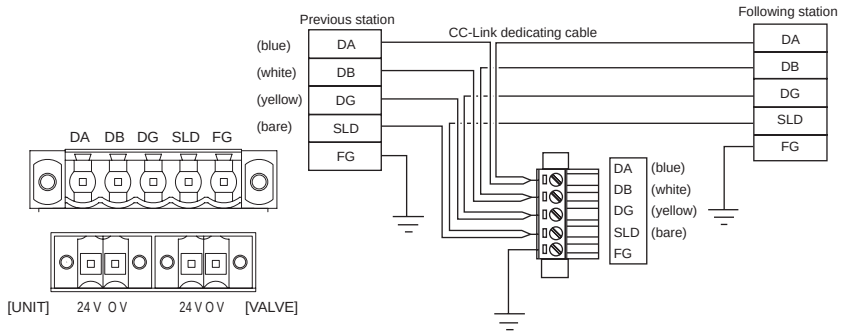

- Power is connected to the 2-pole connector.
- CC-Link cable is connected to the 5-pole connector.
- The wiring section connectors are enclosed.

T7N1 / T7N2

LED display

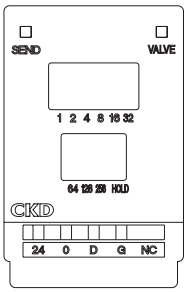

LED name	Display description
SEND	This indicates a synchronization signal from the S-LINK V controller with flashing.
VALVE	This stays ON when the valve power supply is energized (This works only when the unit power is ON).

Wiring method

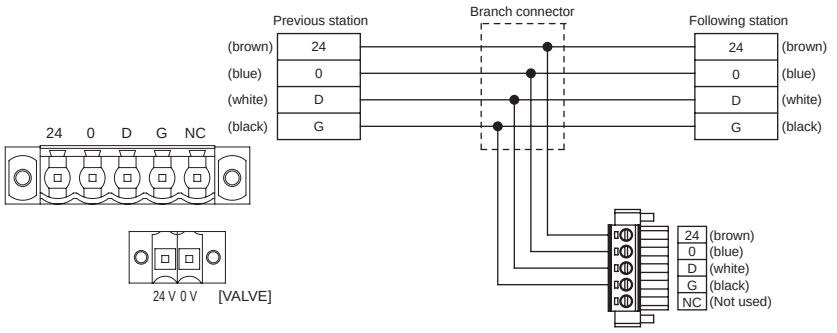

- Power is connected to the 2-pole connector.
- S-LINK V cable is connected to the 5-pole connector.
- The wiring section connectors are enclosed.

Note: Wiring connection connectors

The wiring connection connectors are enclosed with the product. However, if the connector fits the slave unit side connector listed below, it can be used.

	Slave unit side connector model No.		Wiring side connector recommended model No. (attachment)	
	5-pole connector (communication)	2-pole connector (power supply)	5-pole connector (communication)	2-pole connector (power supply)
T7D (DeviceNet)	MSTB2.5/5-GF-5.08AU Phoenix Contact Corp.	SL3.5/2/90F Weidmuller Corp.	MSTB2.5/5-STF-5.08AUM Phoenix Contact Corp.	BL3.5/2F Weidmüller Corp.
T7G (CC-Link)	SL5.08HC/05/90F 3.2SN OR BX Weidmüller Corp.		BLZP5.08Hc/05/180F SN OR BX Weidmüller Corp.	
T7N (S-LINK V)				

Model No.	LED display	Wiring

T7EC1 / T7EC2

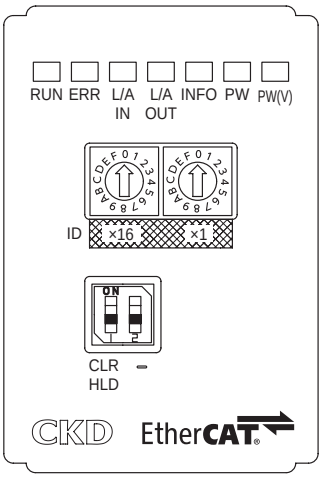

LED	Display description
RUN	Communication status of EtherCAT is indicated by the LED (green) state (OFF/ON/blinking)(Green lamp is ON during normal communication)
ERR	Abnormal status of EtherCAT is indicated by the LED (red) state (OFF/ON/blinking)(Lamp is OFF during normal communication)
L/A IN	Status of the Ethernet port (IN side) is indicated by the LED (green) state (OFF/ON/rapid blinking)
L/A OUT	Status of the Ethernet port (OUT side) is indicated by the LED (green) state (OFF/ON/rapid blinking)
INFO	Error status of the slave unit is indicated by the LED (red) (Lamp is OFF when normal)
PW	Lights when unit power is ON.Green lamp is ON when normal
PW(V)	Lights when valve power is ON.Green lamp is ON when normal (Cannot be monitored when the unit power is not turned ON)

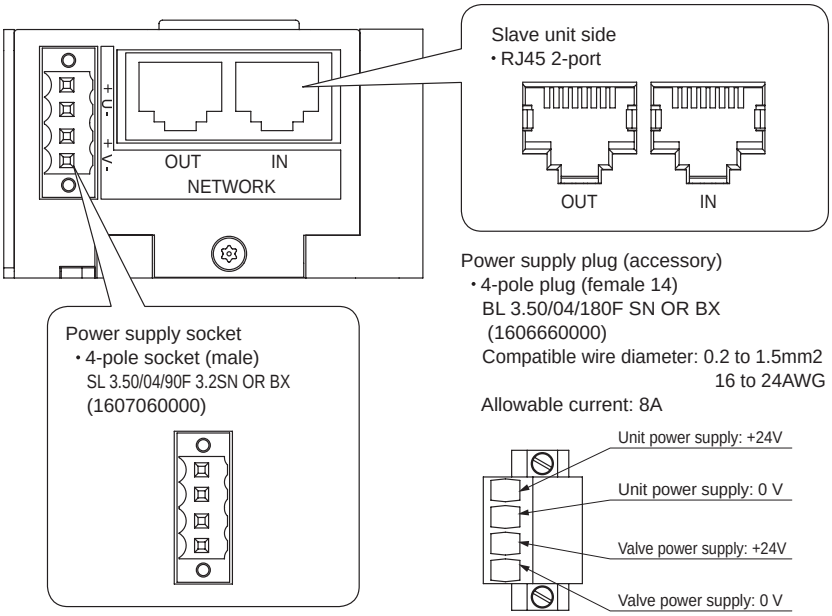

Communication connector pin array

Port	Pin	Comm	Function
IN/OUT	1	TD+	Transmitted data, positive
	2	TD-	Transmitted data, negative
	3	RD+	Received data, positive
	4	Vacant	
	5	Vacant	
	6	RD-	Received data, negative
	7	Vacant	
	8	Vacant	

T7EN1 / T7EN2

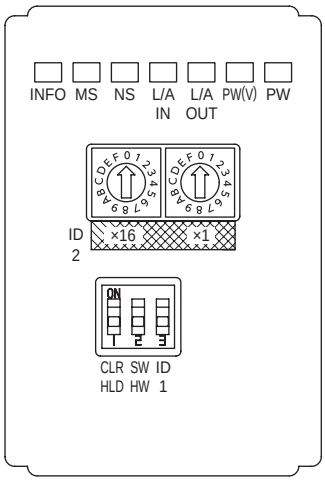

LED	Function	Display description	
INFO	Not used	–	–
MS	EtherNet/IP slave unit state display	green blinking green light red blinking red light	IP address not set state or setting communication Normal switch setting illegal slave unit body abnormality
NS	Communication state	green blinking green light red blinking red light	No link Link detection (normal communication) Communication error (timeout) address overlap
L/A IN	Ethetnet IN side link state	OFF green light Green ON/ yellow blinking	No link, no transmission/reception data No link detection, no transmission/reception data Link detection, transmitting and receiving data
L/A OUT	Ethetnet OUT side link state	OFF green light Green ON/ yellow blinking	No link, no transmission/reception data No link detection, no transmission/reception data Link detection, transmitting and receiving data
PW (V)	Valve power state	OFF green light	Valve power OFF Valve power ON
PW	Unit power supply state	OFF green light	Unit power OFF Unit power ON

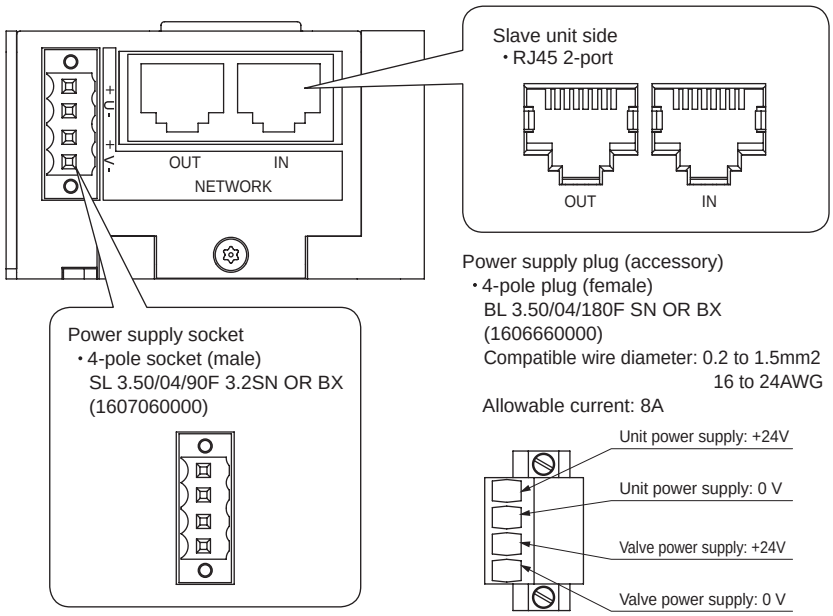

Communication socket pin array

Port	Pin	Comm	Function
IN/OUT	1	TXD+	Transmitted data, positive
	2	TXD-	Transmitted data, negative
	3	RXD+	Received data, positive
	4	Vacant	
	5	Vacant	
	6	RXD-	Received data, negative
	7	Vacant	
	8	Vacant	

SCPD3
SCM
MDC2
SMG
SSD2
STM
STG
LCR
LCG
LCX
LCM
STR2
MRL2
GRC
Cylinder switch
MN3E MN4E
4GA/B
M4GA/B
MN4GA/B
F.R.(module unit)
Clean F.R.
Precision R
Press gauge Diff. press gauge
Electro-pneumatic R
Speed controller
Auxiliary valve
Fitting/ tube
Clean air unit
Pressure sensor
Flow rate sensor
Valve for air blow
Ending

PLC compatibility table

Model No.	Manufacturer name (recommended organization)	Communication protocol	Host unit model No.
T6G1	CC-Link Partner Association (CLPA)	CC-Link	Connected to each manufacturer's CC-Link compatible master
	Mitsubishi Electric Corporation		QJ61BT11N
T7D*	ODVA	DeviceNet	Connected to each manufacturer's DeviceNet compatible master
	OMRON Corporation		CJ1W-DRM21
T7G*	CC-Link Partner Association (CLPA)	CC-Link	Connected to each manufacturer's CC-Link compatible master
	Mitsubishi Electric Corporation		QJ61BT11N
T7N*	Panasonic Industrial Devices SUNX Co., Ltd.	S-LINK V	Connected to S-LINK V controller or various S-LINK V control boards
T7EC*	EtherCAT Technology Group	EtherCAT	Connected to EtherCAT compatible master
	OMRON Corporation		NJ101 NJ301 NJ501 CJ1W-NC□82
T7EN*	ODVA	EtherNet/IP	

CAUTION: For details on master units and models not listed above, contact each PLC manufacturer.

How to disassemble/assemble block manifold

⚠ CAUTION: Be sure to turn power OFF and release pressure before you add or remove a manifold.

In the section below, the following procedures are explained: Changing the valve blocks, replacing the valve blocks due to service life, etc., adding the supply/exhaust blocks and changing/increasing the specifications using various pressure supply devices. Refer to the individual Instruction Manuals for details.
Turn OFF power and stop the air pressure source before starting disassembly. When the manifold has been disassembled and assembled, if the connection key is not correctly returned between the blocks or if the wiring and end block screws are insufficiently tightened, air could leak or malfunctions could result. Confirm that the connection keys are correctly returned between the blocks and that the blocks are securely fixed onto the DIN rail before supplying the air. CKD recommends using identification marking when disconnecting A and B port piping.

Replacing valve blocks and dummy blocks

(1)Loosen the DIN rail set screw on the end block.
(2)Using a thin tool, press down on the key connecting the valve block to be replaced and the blocks on both sides.

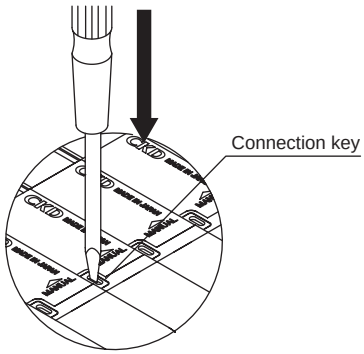

(3)Slide the block to the end block side, and provide a space of 10 mm on each side of the block to be replaced.
Take off the valve block moving parallel to the DIN rail.
⚠ Sliding it at an angle may damage the wiring connector.

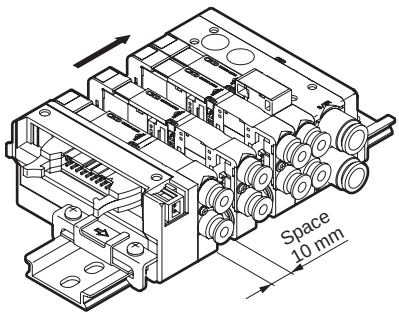

(4)Lift up the block's wiring cover side, and pull toward the piping port side. The block will come off the DIN rail.

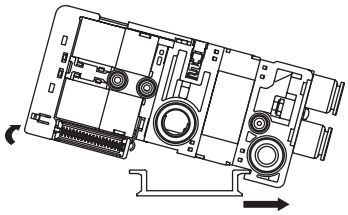

(5)Replace with a new block.
(6)Slide all of the blocks to the electrical block side so that there are no spaces between the blocks.
(7)Confirm that the connection key has returned to the groove on the block.
(8)Confirm that the end block's retainer claws are hooked on both sides of the DIN rail, and then tighten the set screw with a screwdriver. Correct tightening torque is 1.4 N·m.

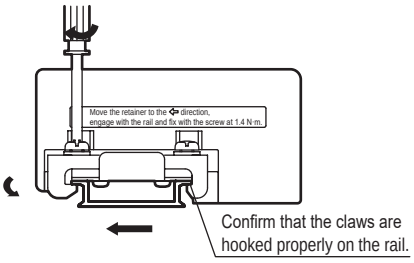

Increasing the valve blocks

(1)The blocks are added with the same procedures as replacing the valve blocks.
(2)If you plant to add another one in the future, specify the DIN rail length in the specifications (page 410).

Mounting the supply/exhaust block

(1)The blocks are added with the same procedures as replacing the valve blocks.

Replacing the cartridge fitting

(1)Remove the set screw.
(2)Pull out the stopper plate with the fitting.
(3)Align the groove of the replacement fitting with the stopper plate and assemble them temporarily.
(4)Assemble the stopper plate with the fitting, and tighten the set screw. Pull on the fitting and confirm that it is installed correctly.

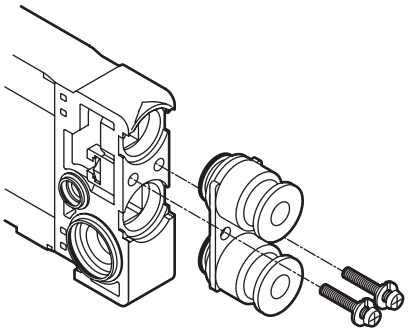

Tightening torque
Valve block: 0.22 ±0.02 N·m
Supply and exhaust block: 0.42 ±0.02 N·m

Checking after disassembly and assembly

Check the piping and confirm that it is correct. Check that the port A and B piping is connected correctly.

Built-in individual power supply function (AUX)

The type with individual power supply function (AUX) allows a random valve in the manifold, which is already connected with reduced wiring, to be operated with a separate power supply. This is effective when adjusting the device, etc.

* MN3E0/MN4E0 only

(1) Valve block with individual power supply function (AUX) Internal structure diagram

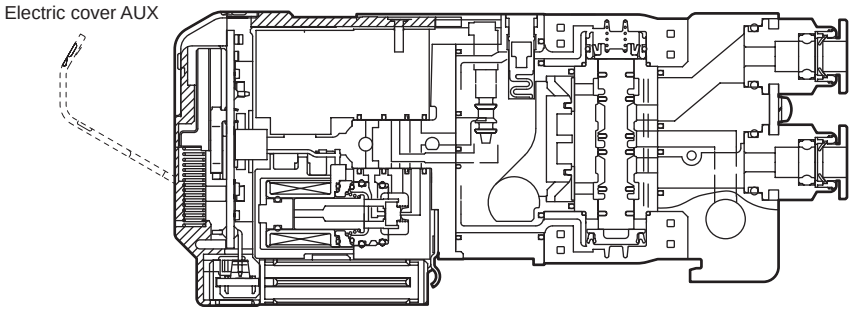

(2) Inputting the individual power supply
Open the wiring cover, and connect power input socket (N4E0-SOCKET-S/D).

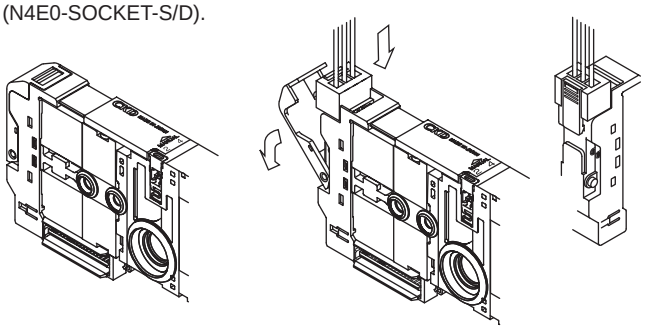

When the power input socket is connected, the wiring in the valve is temporarily separated from the reduced wiring in the manifold, and power can be supplied from an external source.

(3) AUX terminal structure and internal circuit diagram

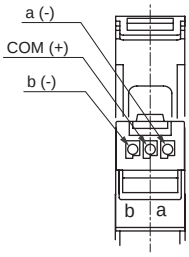

Top of valve block with socket inserted

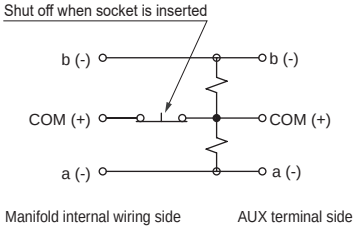

Outline of AUX terminal polarity and internal circuit

⚠ Safety precautions

Note 1: The polarity of the reduced wiring side and individual power supply side is **limited to the positive common**.
The product does not work correctly if the polarity is incorrect.

Note 2: **Use a separate power for the reduced wiring side and the individual power input side.**
If the same power is used, the reduced wiring side's wiring will not be cut off, resulting in incorrect operations.

How to operate barbed fitting for ø1.8 fiber tube

* MN3E0/MN4E0 only

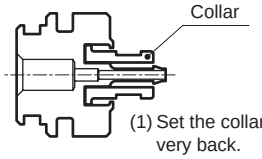

(1) Set the collar at the very back.

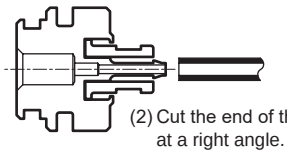

(2) Cut the end of the fiber tube at a right angle.

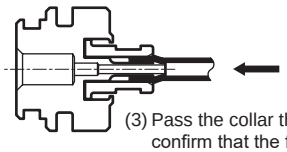

(3) Pass the collar through, and confirm that the fiber tube is correctly inserted while carrying out the work.

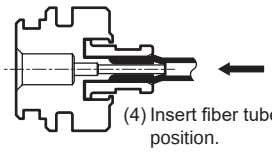

(4) Insert fiber tube to the last position.

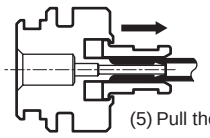

(5) Pull the collar forward to lock it.

Wiring structure between electrical block and valve block

A part called a dedicated wiring connector is incorporated in the valve block and supply/exhaust block, etc. This enables the wiring to be completed simultaneously with the disassembly and assembly of the block manifold. Special wiring work is not required during disassembly and assembly. The wiring structure pattern diagram is shown below.
There is regularity to the wiring block connector pin nos. and arranged valves. Refer to the section on the wiring method, and connect the wires between the valves and control device. Take special care when increasing or decreasing the number of valve blocks.

Only T* (left electrical block) or TM* (intermediate electrical block)

The blocks are arranged in the order of 1a, 1b, 2a and so forth from the valve block to the right of the electrical block with the port facing forward.

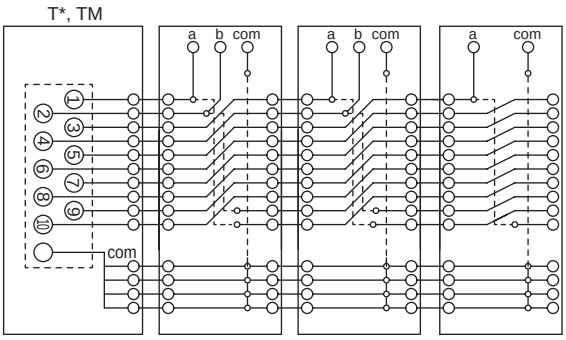

Only T*R (right electrical block)

The blocks are arranged in the order of 1a, 1b, 2a and so forth from the valve block to the left of the electrical block with the port facing forward.

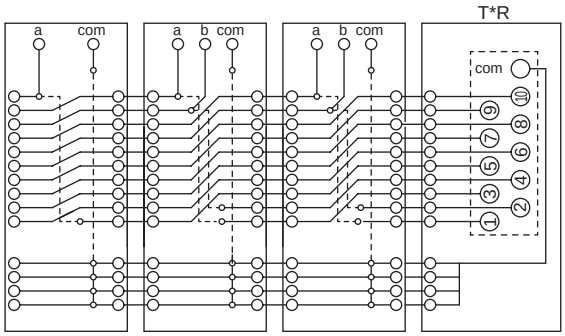

TX (mix) consisting of (T* (left wiring block) or TM* (intermediate wiring block)) + TM* (intermediate wiring block)

The blocks are arranged in the order of 1a, 1b, 2a, and so forth from the valve block on the right of the wiring block with the port facing forward.
A wiring ends on the left of the intermediate wiring block.

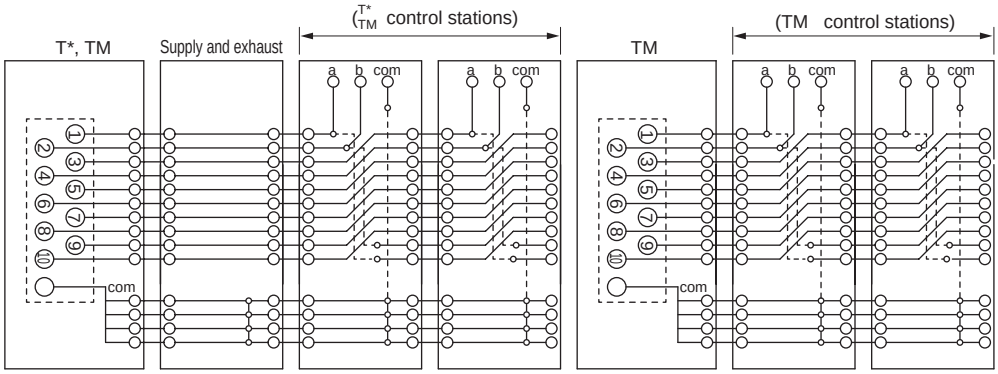

SCPD3
SCM
MDC2
SMG
SSD2
STM
STG
LCR
LCG
LCX
LCM
STR2
MRL2
GRC
Cylinder switch
MN3E MN4E
4GA/B
M4GA/B
MN4GA/B
F.R.(module unit)
Clean F.R.
Precision R
Press gauge Diff. press gauge
Electro-pneumatic R
Speed controller
Auxiliary valve
Fitting/ tube
Clean air unit
Pressure sensor
Flow rate sensor
Valve for air blow
Ending

TX (mix) consisting of (T* (left wiring block) or TM* (intermediate wiring block)) + T*R (right wiring block)

1a, 1b, 2a and so forth layout starting from the left electrical block and 1a, 1b, 2a and so forth layout starting from right electrical block exist.
The circuit is shut off at the center with the supply/exhaust block N4E0-Q-*-C (type with no internal wiring circuit) to prevent the wires from interfering with each other.

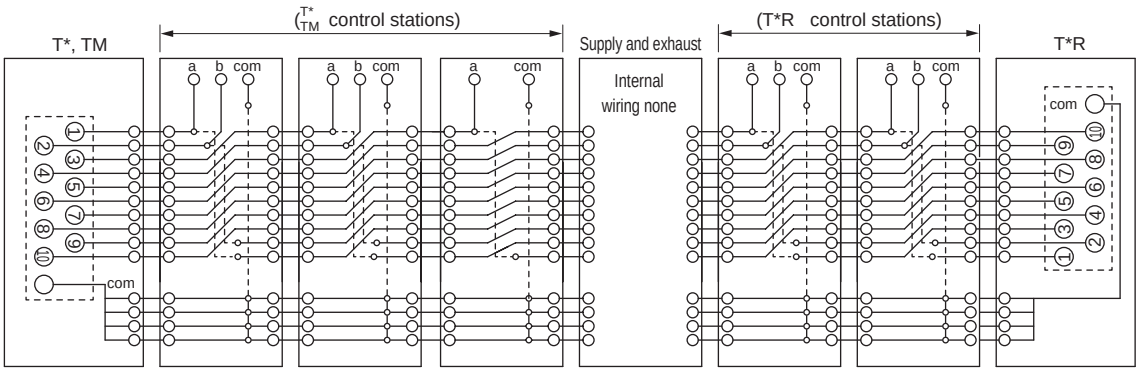

Example of incorrect layout Left/right wires interfere at center
The left/right electrical block circuits could be connected via the manifold and result in unexpected valve operation.

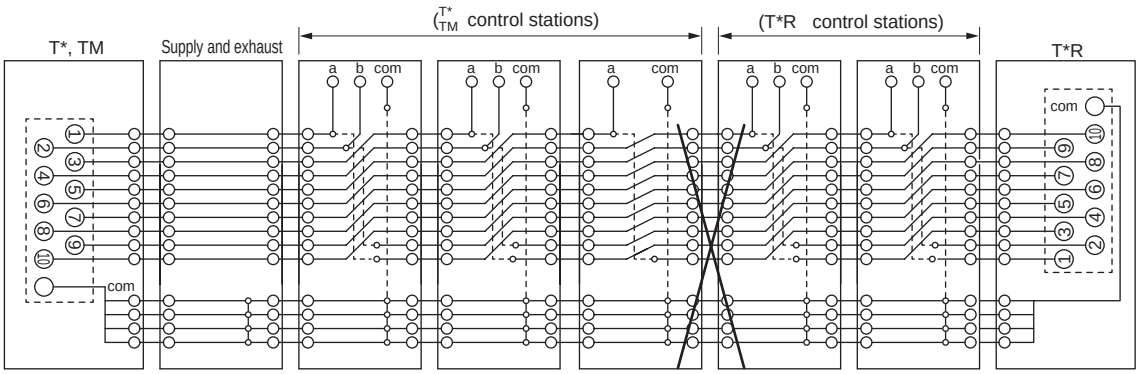

How to fill out MN3E/MN4E Series manifold specification sheet

● Example of manifold model No. (To include a dummy block, select mix manifold and write the station No. including the number of dummy blocks.)

MN 4 E0 8 0 – CX – M – T50RD2 W F – 10 – 3 – P70

Ⓐ Model No. Ⓑ Solenoid position Ⓒ Port size Ⓓ Manual operating device Ⓔ Wiring method Ⓕ Terminal/ Connector pin array Ⓖ Option Ⓗ Station No. Ⓘ Voltage Clean room specification

(For the manifold model No., refer to pages 340, 342, 352 and 354.)

• Refer to the "Block configurations" (pages 364 to 372) and select the model No.
• Complete from the left end, with the piping port facing forward, regardless of the wiring block method.

Part name	Model No.	Layout position 1	2	3	4	5	6	7	8	9	10	11	12	13	14	15	16	17	18	19	20	21	22	23	24	25	26	27	28	29	30	31	32	33	34	35	36	Qty.
Electrical block	N4E0-T 50R															○																						1
	N4E0-T																																					
Layout when including individual wiring			○	○																																		2
Valve block 7 mm pitch	N E00 0-																																					
	N E00 0-																																					
	N E00 0-																																					
	N E00 0-																																					
Valve block 10 mm pitch	N 3 E0 1 0- C6		○	○																																		2
	N 3 E0 1 0- C4					○																																1
	N 3 E0 2 0- C4						○			○																												2
	N 3 E0 3 0- C4											○	○	○																								3
Dummy block	N4E0-MPS																																					
	N4E0-MPD							○	○																													2
Supply and exhaust block	N4E0-Q Z- 8- S										○																											1
	N4E0-Q-8														○																							1
	N4E0-Q - - - -																																					
End block	N4E0-E L	○																																				1
	N4E0-E																																					

Mounting rail	L2=																																					Qty.
		Blank plug (for push-in fitting)																					Silencer								Push-in fitting tube remover ☐ Not required (Put a check mark)								Accessories
		ø1.8				ø3				ø4				ø6				ø8					ø6				ø8											
		ø 1.8 tube barbed threaded fitting (10 pieces in a set)																													Cable with D sub-connector							
		N4E0-JOINT-PTN2-M3								N4E0-JOINT-PTN2-M5								N4E0-JOINT-PTN2-6													N4T-CABLE-D0 -							
		Socket assembly for power supply (for individual wiring, AUX)																													Electrical block TM1 connector							
		N4E0-SOCKET- -												3M0-SOCKET-SET																	N4E0-TM-CONNECTOR							
	(Write an integer multiple of 12.5.)	N4E00-SOCKET- -												N4E00-SOCKET-SET																								

Preparing the manifold specifications

● Complete from the left end, with the piping port facing forward, regardless of the electrical block method.
(Please include the model No. of the block selected from block configurations (pages 378 to 387) and instructions for the arrangement thereof.)
● Indicate the total number of blocks designated in the required quantity on the right of the table.
● Indicate the quantity for required accessories.
● Indicate the mounting rail length. (Only when requiring a length other than the standard length, write an integer multiple of 12.5.)

Obtaining the DIN rail length

Obtain the mounting rail length and pitch based on the manifold length (L_1) with the following calculation formula.
The rail length obtained here is the standard length, and does not need to be indicated in the specifications. Indicate the length in the specifications only if it is different from the standard length.

Manifold length L_1 = (7 × Valve block) + (10 × Valve block) + (7 × Dummy block) + (15.5 × Supply and exhaust block) + Electrical block (including end block) ..... Select from the right table.

Mounting rail length $L_2 = L_2' \times 12.5$

$$L_2' = \frac{L_1 + 25}{12.5}$$ → Round up the first decimal place. DIN rail mounting pitch $L_3 = L_2 - 12.5$

Electrical block width table

Electrical block		Dimensions (mm)
T30(N)/T30(N)R	Left or right electrical block	42.4
T5*/T5*R	Left or right electrical block	42.4
TM*	Intermediate electrical block	43.2
TM* × 2	Intermediate electrical block × 2 piece	55.2
TM* + T3*/T5*	Intermediate electrical block + left or right electrical block	54.4
T30/T5* + T30R/T5*R	Left wiring block + right electrical block	53.6
T6*	Serial transmission slave unit	115.6
T7*	Serial transmission slave unit (close contact)	73.1
T7EC*/T7EN*	Serial transmission slave unit (close contact)	86.6

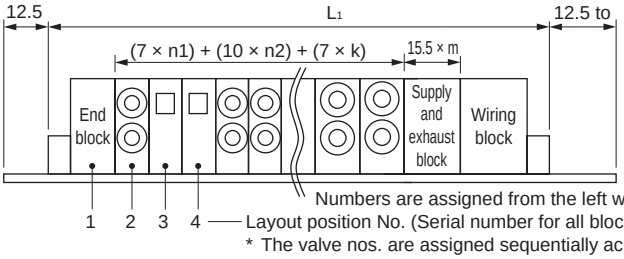

n1 : Number of 7 mm wide valve blocks
n2 : Number of 10 mm wide valve blocks
m : Number of supply and exhaust blocks
k : Number of dummy blocks

Numbers are assigned from the left with the port facing forward.
1 2 3 4 —— Layout position No. (Serial number for all blocks)
* The valve nos. are assigned sequentially across the valve blocks and dummy blocks, and therefore different from the layout position nos.

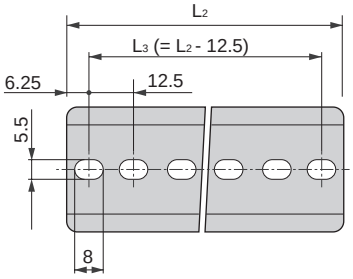

MN3E/MN4E Series manifold specifications

● Contact ● Quantity set(s) ● Request date /

Slip No.	Order No.

Issue date / /
Company
Contact
Order No.

● Manifold model No. (To include a dummy block, select mix manifold and write the station No. including the number of dummy blocks.)

7/10 mm pitch mix manifold

MN ☐ EX0 – ☐ – ☐ ☐ ☐ ☐ – ☐ – ☐ (For the manifold model No., refer to page 376.)

7 mm pitch manifold

MN ☐ E00 ☐ 0 – ☐ – ☐ ☐ ☐ ☐ – ☐ – ☐ (For the manifold model No., refer to pages 346 and 350.)

10 mm pitch manifold

MN ☐ E0 ☐ 0 – ☐ – ☐ ☐ ☐ ☐ – ☐ – ☐ (For the manifold model No., refer to pages 362 and 366.)

Ⓐ Model No. Ⓑ Solenoid position Ⓒ Port size Ⓓ Manual operating device Ⓔ Wiring method Ⓕ Terminal/Connector pin array Ⓖ Option Ⓗ Station No. Ⓘ Voltage -P70 Clean room specifications

- Refer to the "Block configurations" (pages 378 to 387) and select the model No.
- Complete from the left end, with the piping port facing forward, regardless of the wiring block method.

Part name	Model No.	Layout position 1	2	3	4	5	6	7	8	9	10	11	12	13	14	15	16	17	18	19	20	21	22	23	24	25	26	27	28	29	30	31	32	33	34	35	36	Qty.
Electrical block	**N4E0-T ☐**																																					
	N4E0-T ☐																																					
Layout when including individual wiring																																						
Valve block 7 mm pitch	**N ☐ E00 ☐ 0- ☐**																																					
	N ☐ E00 ☐ 0- ☐																																					
	N ☐ E00 ☐ 0- ☐																																					
	N ☐ E00 ☐ 0- ☐																																					
Valve block 10 mm pitch	**N ☐ E0 ☐ 0- ☐**																																					
	N ☐ E0 ☐ 0- ☐																																					
	N ☐ E0 ☐ 0- ☐																																					
	N ☐ E0 ☐ 0- ☐																																					
Dummy block	**N4E0-MPS**																																					
	N4E0-MPD																																					
Supply and exhaust block	**N4E0-Q ☐-☐-☐-☐**																																					
	N4E0-Q ☐-☐-☐-☐																																					
	N4E0-Q ☐-☐-☐-☐																																					
End block	**N4E0-E ☐**																																					
	N4E0-E ☐																																					
Mounting rail	**L2= ☐** (Write an integer multiple of 12.5.)																																					

Accessories

Blank plug (for push-in fitting)										Silencer				Push-in fitting tube remover ☐ Not required (Put a check mark)
ø1.8		ø3		ø4		ø6		ø8		ø6		ø8		

ø 1.8 tube barbed threaded fitting (10 pieces in a set)						Cable with D sub-connector	
N4E0-JOINT-PTN2-M3		**N4E0-JOINT-PTN2-M5**		**N4E0-JOINT-PTN2-6**		**N4T-CABLE-D0 ☐-☐**	

Socket assembly for power supply (for individual wiring, AUX)				Electrical block TM1 connector	
N4E0-SOCKET- ☐-☐		**3M0-SOCKET-SET**		**N4E0-TM-CONNECTOR**	
N4E00-SOCKET- ☐-☐		**N4E00-SOCKET-SET**			

* The max. number of inputs of individual wiring is 16 when the T** wiring method and individual wiring are combined. Individual wiring is not available for the TX wiring method.

References circuit diagram

The circuit diagram of the manifold model No. (example) on the previous page is shown as below for reference.

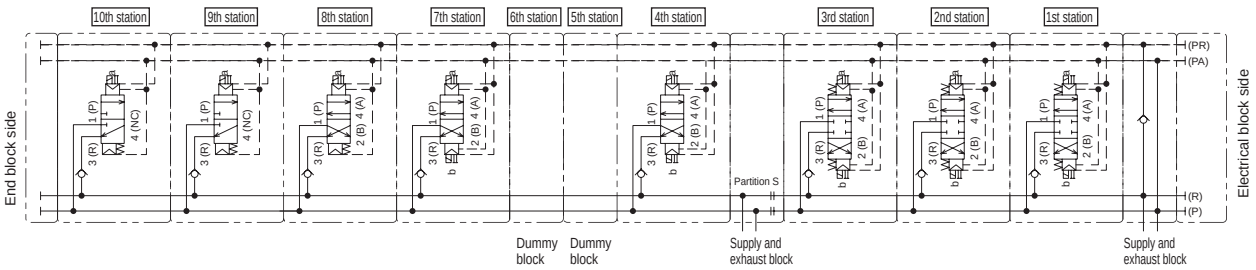

MEMO

Pneumatic components

Safety Precautions

Always read this section before use.
Refer to page 328 for general precautions for using valves.

Pilot operated 3, 4-port valve MN3E00/MN4E00/MN3E0/MN4E0 Series

Design & selection

1. Self reset

WARNING

■ The self reset is available for the valve block solenoid position class.
There are two different self reset types: "differential pressure return" and "differential pressure spring return." For both types, the main valve returns to the original position (self-resets) when it is turned off under normal pressures. However, if the supply pressure is zero in the ON state,
• The "differential pressure return" holds the current position, and
• The "differential pressure spring return" will return to the original position with spring force.
Select the type based on the interlock specifications of the device in use.

Main valve hold/return states

Valve			Source pressure down when ON	→ Source pressure return	Power supply shutdown when ON
N3E00 N3E0	1/11	3-port valve single N.C./N.O. self reset (differential pressure spring return)	OFF (origin) movement	ON movement	OFF (origin) movement
	2/21	3-port valve double N.C./N.O. self hold	ON position holding		ON position holding
	66/67/76/77	Dual 3-port valve integrated N.C./N.O. self reset (differential pressure return)	ON position holding		OFF (origin) movement
	66S/67S/76S/77S	Dual 3-port valve integrated N.C./N.O. self reset (differential pressure spring return)	OFF (origin) movement	ON movement	OFF (origin) movement
N4E00 N4E0	1	4-port valve 2-position single solenoid self reset (differential pressure spring return)	OFF (origin) movement	ON movement	OFF (origin) movement
	2	4-port valve 2-position double self hold	ON position holding		ON position holding
	3/4/5 (N4E0 only)	4-port valve 3-position	OFF (origin) movement	ON movement	OFF (origin) movement

2. Check valve

WARNING

■ The check valve blocks the back pressure from adjacent air devices, etc. However, the structure does not allow the pressure seal to be held continuously, so do not use for other than the back pressure block.

3. Built-in individual power supply function (AUX)

WARNING

■ The polarity of the reduced wiring side and individual power supply side is **the positive common**.
Proper operation will not occur if the polarity is incorrect.
Use a different power supply for the reduced wiring side from the individual power input side.
If the same power supply is used, the reduced wiring side's wiring will not be cut off, resulting in incorrect operations.

■ Inputting individual power
Open the wiring cover, and connect power input socket (N4E0-SOCKET-S/D).

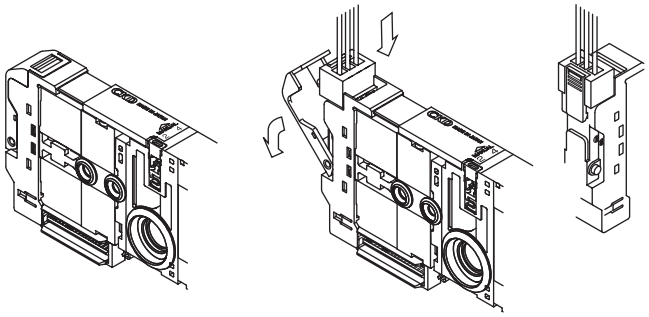

When the power input socket is connected, the valve's internal wiring will be temporarily separated from the reduced wiring in the manifold, so power can be supplied from an external source.

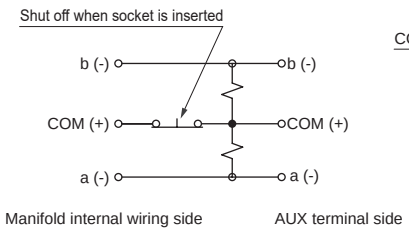

Outline of AUX terminal polarity and internal circuit

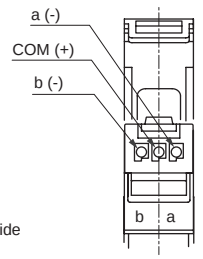

Valve block upper socket insertion diagram

Design & selection

4. Wiring block mix

⚠ WARNING

■ When using the mixed wiring block specifications by using T*R (right side specifications) for the wiring block, short-circuiting of the signal wires between the wiring blocks must be prevented. If left and right signals are connected, unintentional valve block operation will occur and equipment may be damaged.
Lay out the supply/exhaust block N4E0-Q*-C (specifications without internal wiring) between the valve supplied power from the left side and the right side.

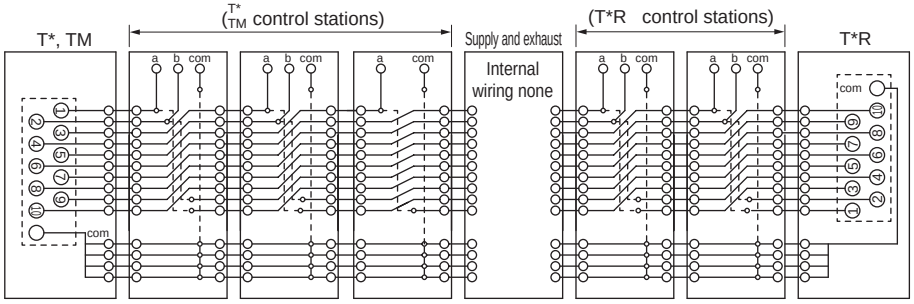

Example of incorrect layout The left and right wirings interfere at the center.

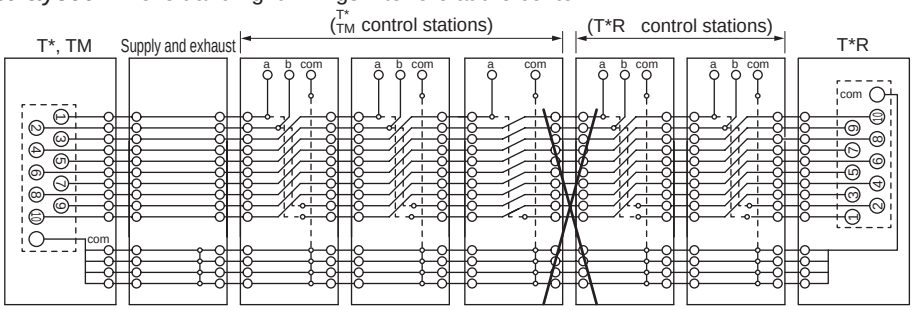

5. Surge suppressor

⚠ CAUTION

■ The surge suppressor attached to the solenoid valve is intended to protect the output contacts for the solenoid valve drive. There is no significant protection for the other peripheral devices, and devices could be damaged or could malfunction due to a surge. As well, surges generated by other devices may be absorbed and cause damage such as burning. Note the following points.

(1) The surge suppressor functions to limit solenoid valve surge voltage, which can reach several hundred volts, to a low voltage level that the output contact can withstand. Depending on the output circuit used, this may be insufficient and could result in damage or malfunction. Check whether the surge suppressor can be used within the surge voltage limit of the solenoid valve in use, the output device's withstand pressure and circuit structure, and by the degree of return delay time.
When necessary, provide other surge countermeasures. The inverse voltage surge generated when OFF can be suppressed to the following levels.

Voltage specification	Reverse voltage value when power turned OFF
12 VDC	Approx. 27 V
24 VDC	Approx. 47 V

(2) When using the NPN output unit, the voltage given in the left table and a surge voltage equivalent to the power supply voltage could be applied on the output transistor. Install the contact protection circuits in this case.

[Example of output transistor protective circuit mounting 1]

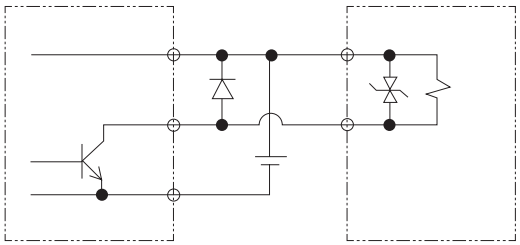

[Example of output transistor protective circuit mounting 2]

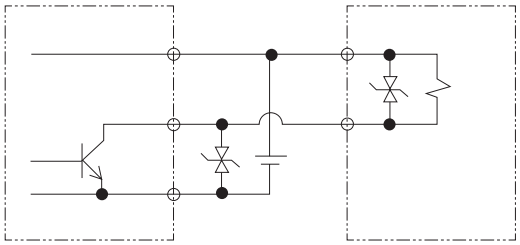

SCPD3
SCM
MDC2
SMG
SSD2
STM
STG
LCR
LCG
LCX
LCM
STR2
MRL2
GRC
Cylinder switch
MN3E MN4E
4GA/B
M4GA/B
MN4GA/B
F.R.(module unit)
Clean F.R.
Precision R
Press gauge Diff. press gauge
Electro-pneumatic R
Speed controller
Auxiliary valve
Fitting/ tube
Clean air unit
Pressure sensor
Flow rate sensor
Valve for air blow
Ending

(3) When solenoid valves are connected in parallel with other components or solenoid valves, inverse voltage is applied to these components and/or solenoid valves when the solenoid valve is turned OFF. Even in the case of a solenoid valve with 24 VDC surge suppressor, a surge voltage may reach negative tens of volts for same models. This inverse polarity voltage may cause damage or malfunctions to other components connected in parallel. Avoid parallel connection of devices susceptible to inverse polarity voltages, e.g., LED indicator lamp. When driving several solenoid valves in parallel, the surge from other solenoid valves may enter the surge suppressor of one solenoid valve, and it may burn depending on the current value. When driving several solenoid valves with surge suppressors in parallel, surge current could concentrate at the surge suppressor with the lowest limit voltage and cause similar burning. Due to the variations in surge suppressor limit voltage that exist even among solenoid valves of the same model No., in the worst case the surge suppressor may burn out. Avoid driving several solenoid valves in parallel.

(4) The surge suppressor incorporated in the solenoid valve will often be short-circuited if it is damaged by overvoltage or overcurrent from other solenoid valves. Where there is a failed surge suppressor, if a large current flows when the output is ON, in the worst case scenario, the output circuit or solenoid valve could be damaged or ignited. Do not continue energizing in a state of failure. Additionally, to prevent large currents from continuing to flow, connect an overcurrent protection circuit to the power supply and drive circuit, or use a power supply with overcurrent protection.

6. Low heat/energy saving circuit

⚠ CAUTION

■ Do not use this valve in an environment where the vibration and impact exceed specifications. The valve could malfunction.

With the type with low heat, energy-saving circuit, the control circuit is built into the valve block. The current value when the coil is sucked and held is lowered with this structure. Only plus common polarity is used.

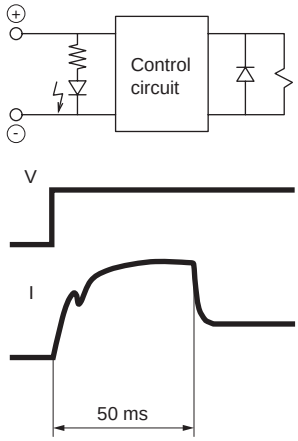

Individual specifications for low heat, energy saving circuit

Descriptions			Content	
			N4E00	N4E0
Energizing current A	Starting	24 VDC	0.017	0.025
		12 VDC	0.033	0.050
	Holding	24 VDC	0.009	0.013
		12 VDC	0.018	0.025
Power consumption W	Starting	24 VDC	0.4	0.6
		12 VDC		
	Holding	24 VDC	0.22	0.3
		12 VDC		

7. Polarity

⚠ CAUTION

■ For the low heat, energy-saving circuit, connection is restricted to the positive common. Note the connection polarity. For details on surge suppressor, refer also to "5. Surge suppressor" on page 413.

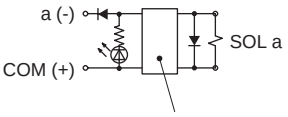

Single, energy saving circuit integrated

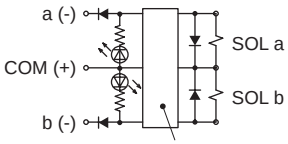

Double, energy saving circuit integrated

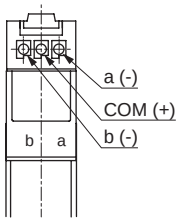

Upper view of valve block

■ The valve cannot be kept energized if instantaneous power outage of 30 ms or less occurs on the power source driving the solenoid valve. If instantaneous power outage of 30 ms or less occurs on the power source driving the solenoid valve due to a disturbance, cut the power off for 50 ms or longer to turn the solenoid valve on again.

8. Wiring in manifold when using with reduced wiring

⚠ CAUTION

■ The internal circuit of the individual wiring valve block is completely separated from the reduced wiring electric circuit in the manifold. Even if the individual wiring valve block is inserted between the reduced wiring valve blocks, the pin layout on the electrical block side will not change.

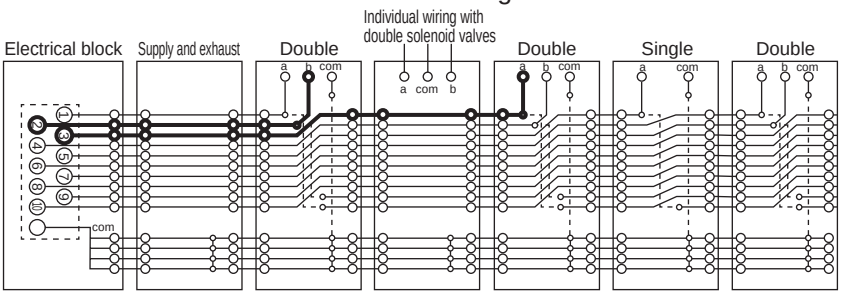

The pin layout on the electrical block side eliminates the individual wiring in order from the first station, and shifts the blocks in order.

Mounting, Installation & adjustment

1. Manual operating device

⚠ WARNING

- The 4E Series is a pilot operated solenoid valve. The main valve does not switch over even if the manual override is operated unless air is supplied to the port P (port PA for external pilot).

- Manual override protective cover is provided as standard. Since the manual override protective cover is closed when shipped, the manual override is protected and cannot be seen when delivered. Open the protective cover to operate the manual override. Note that the protective cover cannot be closed unless the locking manual override is released.

- Manual override is used for both non-locking and locking. The lock is engaged by pressing down and turning the manual override. Press down first to lock. If it is turned without being pressed down, it could be damaged or air could leak.

2. External pilot piping port

⚠ CAUTION

- The external pilot has a separate pilot air supply. The ø 6 push-in fitting is used to supply pilot air. Check that the piping connection is correct. Malfunction occurs if the piping connection is incorrect.

Port indication

Applications		Indication (ISO standards)
Pilot air	Pilot air supply port	12/14

* A/B ports and the R port cannot be pressurized.

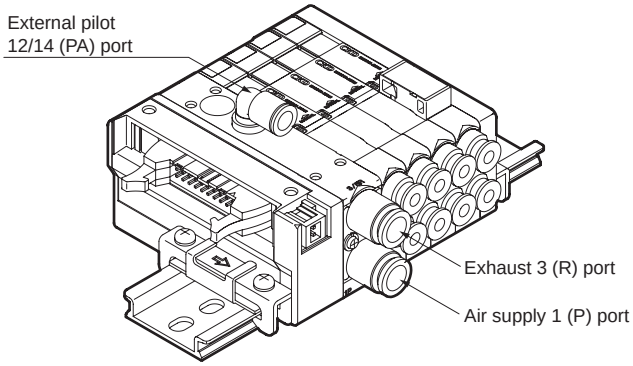

The external pilot air supply port is the ø 6 push-in fitting on the top of the supply/exhaust block.

3. How to install manifold

⚠ CAUTION

- The 4E Series is dedicated for mounting on the DIN rail. The manifold could drop off or be damaged if not installed correctly. If the manifold weighs more than 1 kg or if it is used in an environment with vibration or impact, secure the DIN rail onto the surface at 50 to 100 mm intervals. Be sure to check the mounting before starting operation. Use the specifications to calculate the weight. Also calculate the weight of the other devices installed. (Refer to pages 345 and 361 for weight.)

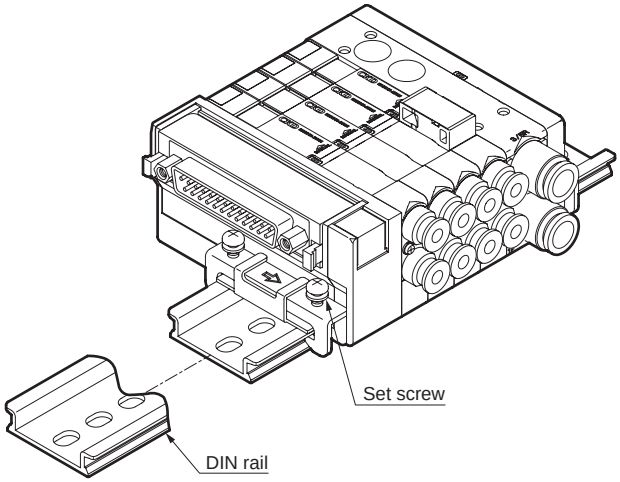

4. Lead wire connection

- The following lead wire is used in the socket of individual wiring valve blocks and type with individual power supply function (AUX) of 4E Series.

Conductor size	Outer diameter of insulator
AWG#26	1.32

When you wire the installed manifold, check that tension is not applied to the lead wire.

Use & maintenance

1. Manual override

⚠ WARNING

■ Opening and closing the manual protective cover

Do not apply excessive force onto the manual protective cover when you open or close it. Excessive external force may cause failures. (Less than 5 N)

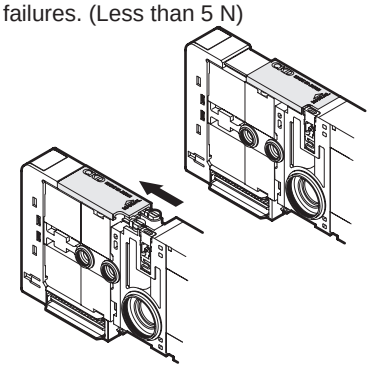

Slide type

■ How to operate manual override

(1) Push & non-locking operation

Push in the direction of the arrow until it stops.
The manual operating device is unlocked when released.

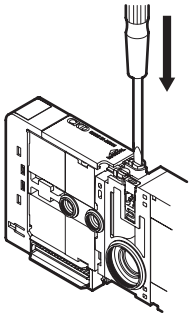

(2) Push & locking operation

Turn it 90 degrees in the direction indicated by an arrow while pressing it. The manual function is not canceled even when it is released.

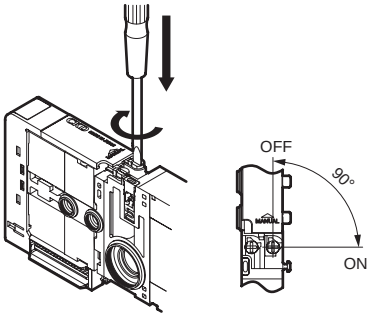

WARNING

When conducting manual operations, make sure that there are no people near the moving cylinder.

2. External pilot piping port

⚠ CAUTION

■ Note supply pressure for dual 3-port valve integrated.

The valving element of dual 3-port valve integrated is operated with the main (P port) supply pressure.

- Check that the main pressure (P port) is not higher than the pilot pressure (PA port).
- Check that the main pressure (P port) does not drop below 0.2 MPa.

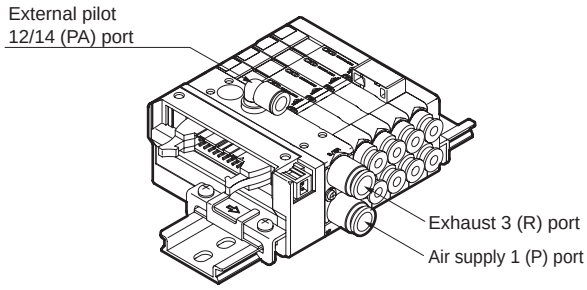

3. Port filter

⚠ CAUTION

■ The port filter prevents foreign matters from entering it, to prevent potential manifold problems (mesh hole ø 0.3 mm). This does not improve the quality of compressed air. Read "Warnings and Precautions" in Introduction, before you mount, install, and adjust it. Do not take off the port filter or push it in by force. The filter may be deformed leading to a problem.
If contaminants and foreign materials are found on the filter surface, blow lightly, or remove them by tweezers, etc.

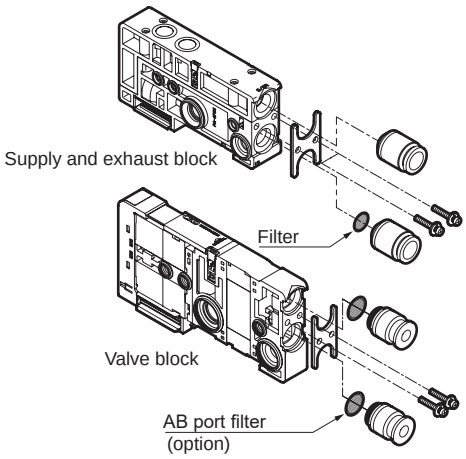

4. Pneumatic pressure source

⚠ CAUTION

■ As this product is non-lubrication, adding oil may cause the grease which is initially sealed in to leak out. This may prevent the product from working at its maximum performance.

MEMO

MEMO

Pilot operated 3, 5-port valve 4G Series

Overview

User-friendly and environment-friendly space saving/high performance pneumatic 5-port valves.
Equipped with safety function for improved reliability/usability.
Suitable for operating cylinders of ø20 to ø160.

Features

Environmental performance

Continuous energization OK
Lower power consumption

Safety

The manual operating device is equipped with protection cover as standard
With internal exhaust check valve (4G1 to 3 Series)
The air supply port is equipped with a filter as standard and the check mechanism is adopted for the connecting key (MN4G)

Reliability

Service life: Life rating 100 million or more cycles (tested under conditions for single solenoid given by CKD)
Response time: 12 ms ± 2 ms is realized (4G1 Series)
Low wattage: 0.1 W (Low exoergic/energy-saving circuit built-in) 0.35 W (standard)

Easy to use

Wiring connector with common top/side
Reduced wiring connector/rotation
Tool-free manual operating device is adopted
4G1/4G2 mix manifold is available. (MN4G)

	Page
Product introduction	420
⚠ Safety precautions	750
Metal base **4GA1** to **3/4GB1** to **3** Series	425
Block manifold **MN4GA/4GB** Series	625
Technical data	713

The New 4G. Get ready.

The new 4G presents new developments while preserving the existing 4G Series concept. Here it is.

Power consumption **0.1 W** With low exoergic / energy saving circuit

Power consumption **0.35 W** Standard

Environmental performance

Continuous energization OK (With low exoergic/ energy saving circuit)

New coil actuator adopted

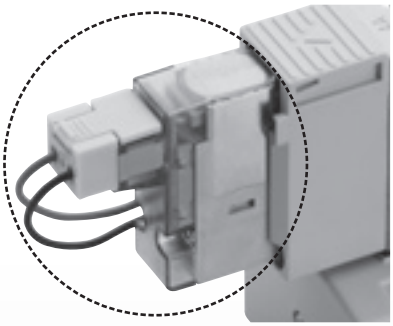

Lower power consumption

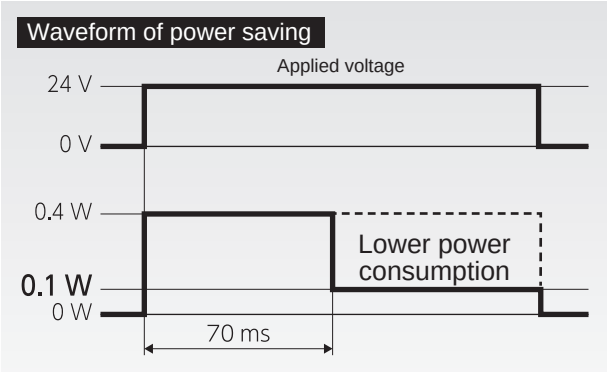

Safety

Prevents manual misoperation

Manual override has a protective cover.

Helps prevent misoperations

[Exhaust check valve]
Standard for both metal-base and resin block designs.

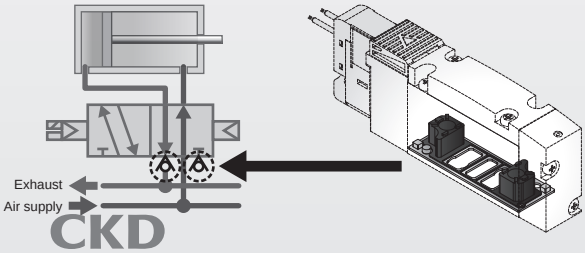

Prevents entry of foreign matter

- Supply filter equipped as standard (on A/B ports available as an option)

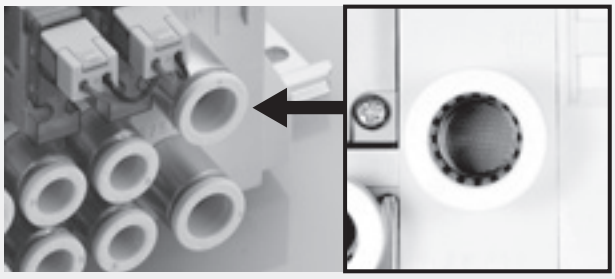

- Internal pilot filter is equipped as standard.

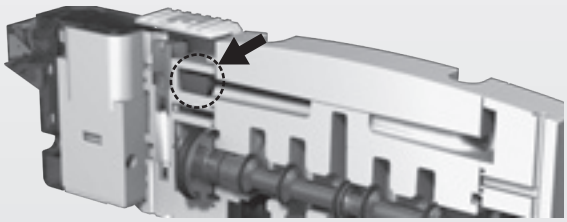

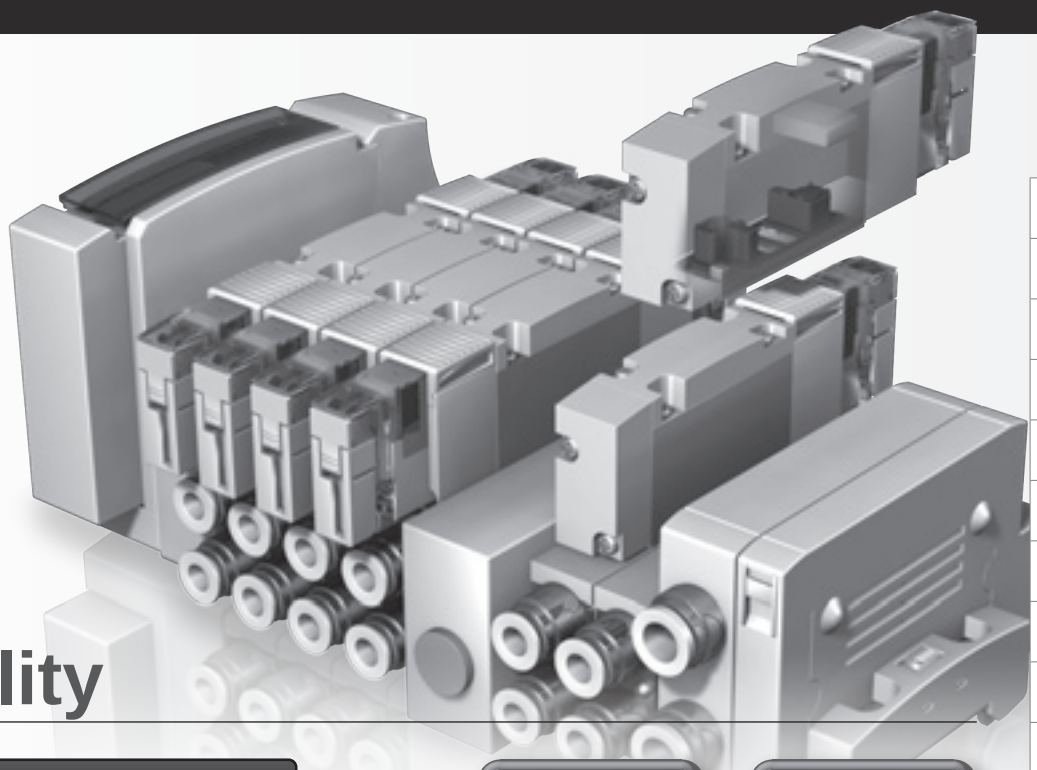

Reliability

Low friction with improved service life

Advanced sliding mechanism of main valve, achieves low friction/long service life.

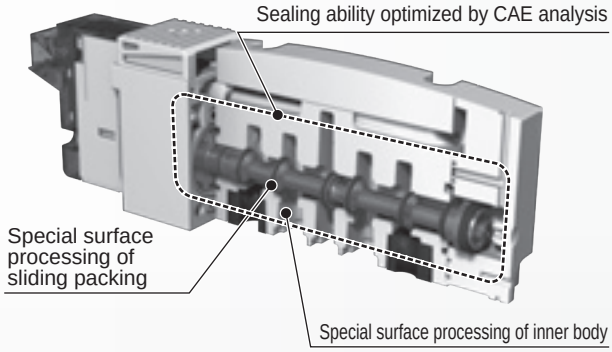

Durability
More than 100 million cycles
Single solenoid, under CKD set conditions.

Response time
12±2 ms
4G1

Improved response to unattended situation

Smooth start-up after weekend shut-down. Useful as measures against Monday morning troubles and unexplained stoppages.

Easy to use

Wiring connector facing-up/lateral common

Easy selection. Changes at gauging installation are supported.

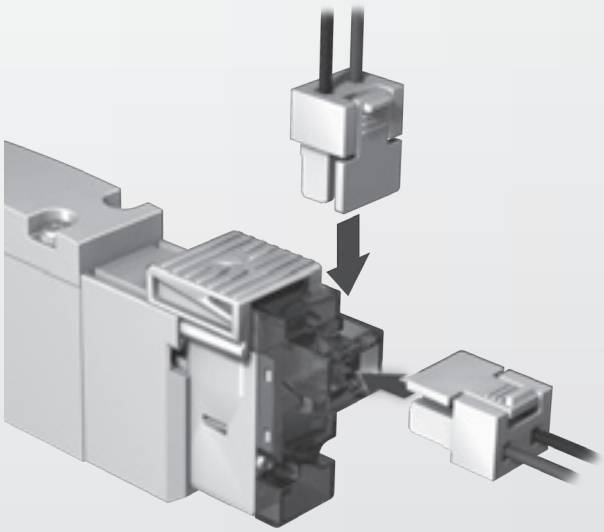

Uses a rotating connector

Switch between vertical/horizontal positions.

Combination of 2 sizes

The manifolds can be connected with a mix block.

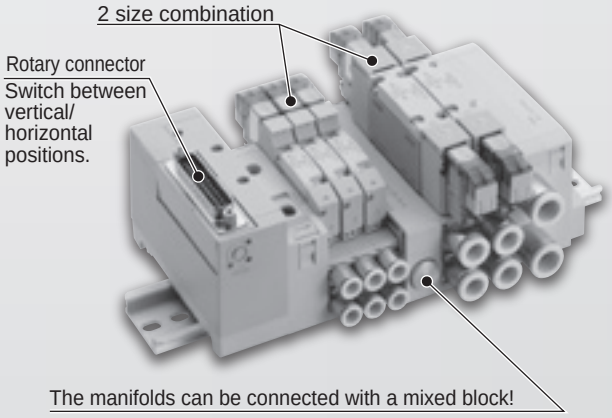

Variety of options

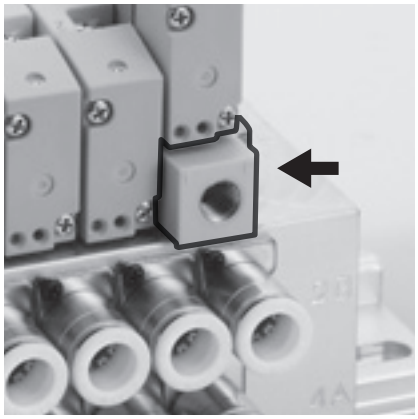

Air supply spacer

Ideal for cylinder thrust adjustments by increasing/ decreasing individual valve pressure!

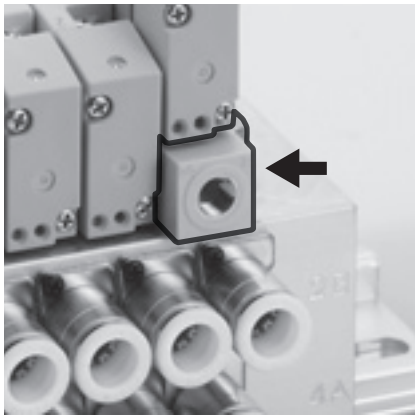

Exhaust spacer

Single acting cylinder malfunction prevention with individual exhaust!

4G1 metal manifold for C8, 4G2 metal manifold for C10

Larger fitting enables increased cylinder operation speed!

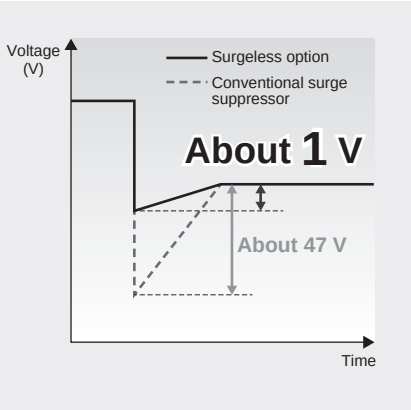

Voltage surgeless option

Coil surge voltage is reduced to around 1 V to protect the output contacts!

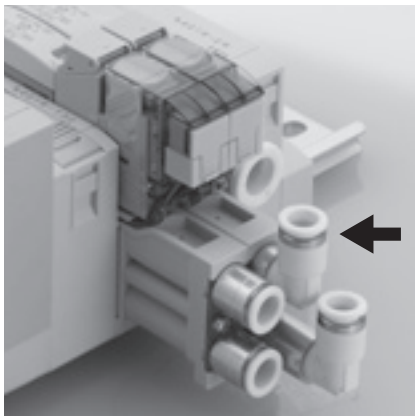

Piping adaptor option for block MF

Increasing flexibility to valve mounting by with variations of piping direction!

Communication Variety

EtherCAT, EtherNet/IP, PROFIBUS-DP and CC-Link, which are used as industrial networks at all levels, are now available in a series with 32 outputs and separate power supplies. (NPN, PNP standards supported)

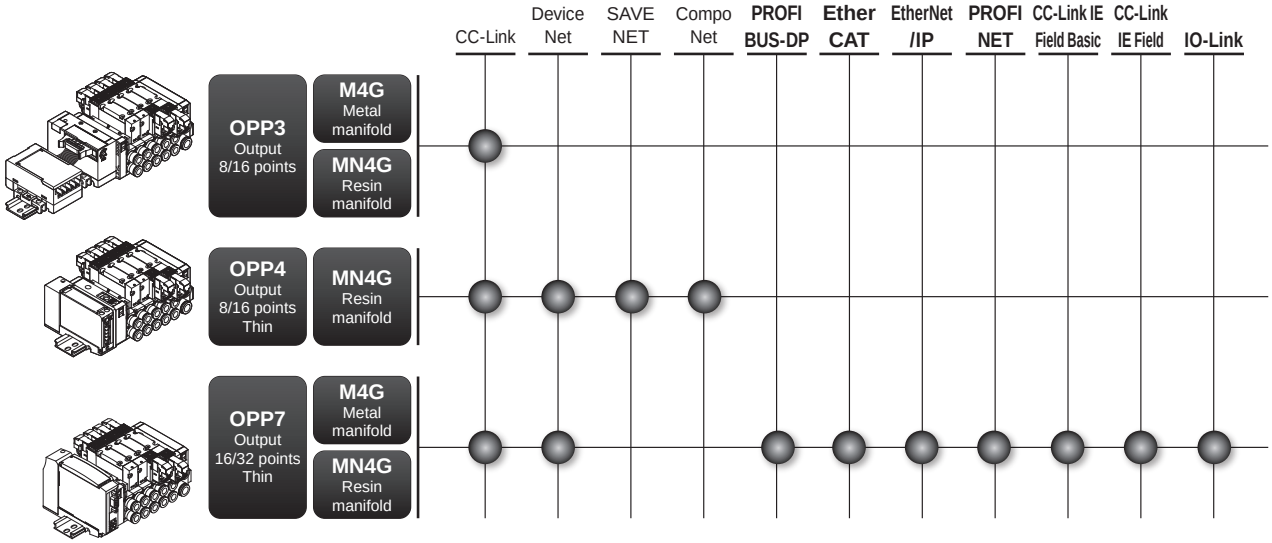

Comparison of application/environment 4GA/B, 4GD/E

Key points are "Air quality and required options."			High functionality type 4GA/B R
Reliability	Air quality	Ultra-dry air N2	◉
		Dry air	◉
		Oil-contaminated air/low ozone	○
		Drain air	◉
	Measures against Monday disease/temporary halt		◉
	Measures against low vacuum problem		○
Safety	Exhaust check function		○
	Manual misoperation prevention function		○
	Prevention of foreign matter entry		○
Easy to use	Piping direction change		○
	External pilot		○
	Wiring connector facing-up/lateral common		○
	No tool required for manual operating device		○

◉ Recommended ○ Supported

4GA1 to 3/4GB1 to 3

Metal base

3, 5-port pilot operated valve

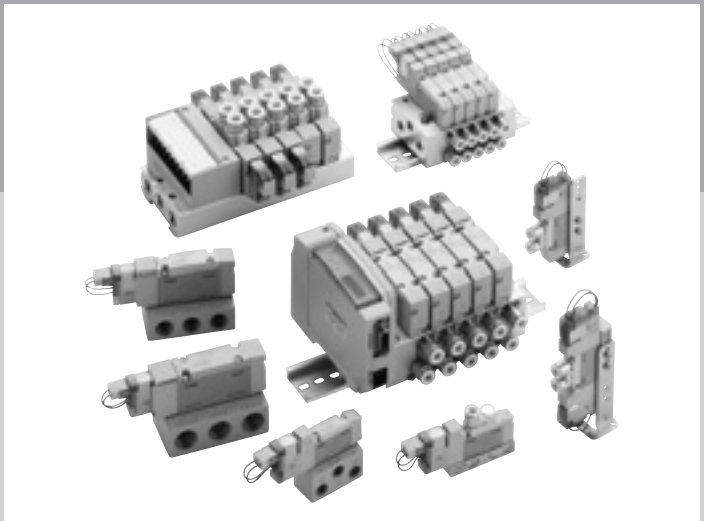

CONTENTS

Series variation 426
Electrical connections list (wire connection/circuit) 429
Product introduction 420

Discrete valve

● **Body piping (3GA1 to 3/4GA1 to 3) 430**
● **Base piping (3GB1 to 2/4GB1 to 3) 472**

Individual wiring manifold

● **Body piping (M3GA1 to 3/M4GA1 to 3) 504**
● **Base piping (M3GB1 to 2/M4GB1 to 3) 518**

Reduced wiring manifold

● **Body piping (M3GA1 to 3-T* (D) /M4GA1 to 3-T* (D))**
- **Common terminal block D sub-connector/flat cable connector/ Serial transmission 540**

● **Base piping (M3GB1 to 2-T* (D) /M4GB1 to 3-T* (D))**
- **Common terminal block D sub-connector/flat cable connector/ Serial transmission 562**

Related products (air supply spacer/exhaust spacer/plug/DIN rail) 592
Related parts 598
Manifold specifications 607
Technical data
(1) Pneumatic system selection guide 744
(2) Notes on wiring 713
(3) Exhaust check valves 751
(4) How to expand reduced wiring manifold 736
⚠ Safety precautions 750

⚠ Always read the safety precautions in the Introduction and on page 750 before use.

Series variation

4GA1 to 3/4GB1 to 3 Series

* Refer to page 625 for a block manifold.

Appearance of series external				Model No.	Position No. of solenoid JIS symbol	Valve performance: Flow characteristics [dm³/(s·bar)] (*1)	Valve performance: Applicable cylinder bore size (ø)	Voltage (V)	Switching position: 2-position: Normally closed	2-position: Normally open	2-position: Single	2-position: Double	3-position: All ports closed	3-position: ABR connection	3-position: PAB connection
Discrete	3GA110R-E* 4GA120R-E*	Body piping	3-port	3GA1	● 3-port valve 2-position single NC	0.66 to 0.70	20 to 40	AC100 AC200 DC24 DC12 DC3 DC5 (*2)	●	●					
				3GA2		2.2 to 2.7	40 to 80		●	●					
				3GA3		3.9	63 to 100		●	●					
			5-port	4GA1		0.66 to 0.70	20 to 40				●	●	●	●	●
				4GA2		2.4 to 2.7	40 to 80				●	●	●	●	●
				4GA3	2-position single NO	3.2 to 4.0	63 to 100				●	●	●	●	●
	4GB310R-E*	Base piping	3-port	3GB1		1.0	20 to 40								
				3GB2		2.1	40 to 80								
			5-port	4GB1	● 5-port valve 2-position single	1.1 to 1.3	20 to 40				●	●	●	●	●
				4GB2		2.2 to 2.5	40 to 80				●	●	●	●	●
				4GB3		3.2 to 4.2	63 to 100				●	●	●	●	●
Individual wiring manifold	M4GA280R-E*D	Body piping	Direct mount DIN rail mount (-D)	M4GA1	2-position double	0.66 to 1.0	20 to 40	AC100 AC200 DC24 DC12 DC3 DC5 (*2)	●	●	●	●	●	●	●
				M4GA2		1.7 to 2.5	40 to 80		●	●	●	●	●	●	●
				M4GA3		2.5 to 3.3	63 to 100		●	●	●	●	●	●	●
	M4GB110R-E*D	Base piping	Direct mount DIN rail mount (-D)	M4GB1		0.67 to 1.0	20 to 40				●	●	●	●	●
				M4GB2		1.6 to 2.4	40 to 80				●	●	●	●	●
				M4GB3	3-position all ports closed	2.6 to 3.3	63 to 100				●	●	●	●	●
Reduced wiring manifold	M4GA280R-T10	Body piping	Direct mount: Terminal (-T1□) Connector (-T30, -T5□)	M4GA1		0.66 to 1.0	20 to 40	DC24 DC12	●	●	●	●	●	●	●
				M4GA2		1.7 to 2.5	40 to 80		●	●	●	●	●	●	●
				M4GA3	3-position A/B/R connection	2.5 to 3.3	63 to 100		●	●	●	●	●	●	●
			Direct mount: Serial transmission (-T8□)	M4GA1		0.66 to 1.0	20 to 40	DC24	●	●	●	●	●	●	●
				M4GA2		1.7 to 2.5	40 to 80		●	●	●	●	●	●	●
				M4GA3	3 positions P/A/B connection	2.5 to 3.3	63 to 100		●	●	●	●	●	●	●
	M4GA180R-T8D		Mount DIN rail: Terminal (-T1□D) Connector (-T30D, -T5□D)	M4GA1		0.66 to 1.0	20 to 40	DC24 DC12	●	●	●	●	●	●	●
				M4GA2		1.7 to 2.5	40 to 80		●	●	●	●	●	●	●
				M4GA3	● Dual 3-port valve integrated NC/NC	2.5 to 3.3	63 to 100		●	●	●	●	●	●	●
			Mount DIN rail: Serial transmission (-T6G1D) (-T8□D)	M4GA1		0.66 to 1.0	20 to 40	DC24	●	●	●	●	●	●	●
				M4GA2		1.7 to 2.5	40 to 80		●	●	●	●	●	●	●
				M4GA3		2.5 to 3.3	63 to 100		●	●	●	●	●	●	●
	M4GB210R-T8*	Base piping	Direct mount: Terminal (-T1□) Connector (-T30, -T5□)	M4GB1	NC/NO	0.67 to 1.0	20 to 40	DC24 DC12			●	●	●	●	●
				M4GB2		1.6 to 2.4	40 to 80				●	●	●	●	●
				M4GB3		2.6 to 3.3	63 to 100				●	●	●	●	●
			Direct mount: Serial transmission (-T8□)	M4GB1	NO/NC	0.66 to 1.0	20 to 40	DC24			●	●	●	●	●
				M4GB2		1.7 to 2.5	40 to 80				●	●	●	●	●
				M4GB3		2.5 to 3.3	63 to 100				●	●	●	●	●
			Mount DIN rail: Terminal (-T1□D) Connector (-T30D, -T5□D)	M4GB1		0.67 to 1.0	20 to 40	DC24 DC12			●	●	●	●	●
				M4GB2		1.6 to 2.4	40 to 80				●	●	●	●	●
				M4GB3	NO/NO	2.6 to 3.3	63 to 100				●	●	●	●	●
			Mount DIN rail: Serial transmission (-T6G1D) (-T8□D)	M4GB1		0.67 to 1.0	20 to 40	DC24			●	●	●	●	●
				M4GB2		1.6 to 2.4	40 to 80				●	●	●	●	●
				M4GB3		2.6 to 3.3	63 to 100				●	●	●	●	●

Series variation

*1: Effective cross-sectional area S and sonic conductance C are converted as S≒5.0XC.
*2: The grommet lead wire specifications are for DC voltages only.
*3: The two 3-port valves integrated type is compatible with 3GA1/2 and 3GB1/2.
*4: P/R piping port is either M5 or Rc thread.
*5: Only compatible with base piping 2-position single model.
*6: P/R piping port is NPT thread.
*7: P/R piping port is G thread.
*8: Specification for reduced wiring manifold built-in. Only compatible with DC12/24V.
*9: "○" indicates made to order.

Switching position		A/B Piping port (*4)																						A/B piping port (*6, *9)										A/B piping port (*7)								Electrical connections											Page
		Barbed fitting	Push-in fitting						Push-in fitting L type (upward) (*5)					Push-in fitting L type (downward)					Female thread				Push-in fitting					Female thread				Push-in Fitting				Female thread				Discrete, individual wiring				Reduced wiring								
3 Port valve 2 Integrated (*3)	Mix	ø1.8	ø1.8	ø4	ø6	ø8	ø10	ø1.8	ø4	ø6	ø8	ø10	ø1.8	ø4	ø6	ø8	ø10	M5	Rc 1/8	Rc 1/4	Rc 3/8	ø1/8"	ø5/32"	ø1/4"	ø5/16"	ø3/8"	M5	1/8NPT	1/4NPT	3/8NPT	ø4	ø6	ø8	ø10	M5	G1/8	G1/4	G3/8	Grommet lead wire (*2)	E□	EJ□	DIN terminal box	A connector (*8)	Common terminal block	D sub-connector	Flat cable with power supply terminal	Flat cable without power supply terminal	Serial transmission	Serial transmission	
		CF	C18	C4	C6	C8	C10	CL18	CL4	CL6	CL8	CL10	CD18	CD4	CD6	CD8	CD10	M5	06	08	10	C3N	C4N	C6N	C8N	C10N	M5N	06 N	08 N	10 N	C4G	C6G	C8G	C10G	M5G	06G	08G	10G	Blank	E□	EJ□	B□	A2N	T1*	T30	T50	T5*	T6G1	T8*	
●		●	●	●	●													●				●	●																●	●	●										
●				●	●	●													●					●	●			●			●	●	●			●			●	●	●	●									430
					●	●	●													●					○	○			○				●	●			●		●	●	●	●									
		●	●	●	●													●				●	●																●	●	●										
				●	●	●													●					●	●			●			●	●	●			●			●	●	●	●									430
					●	●	●													●					○	○			○				●	●			●		●	●	●	●									
●																			●									●								●			●	●	●										472
●																				●									●								●		●	●	●	●									
																			●									●								●			●	●	●										472
																				●									●								●		●	●	●	●									
																				●	●								○	○										●	●	●	●									
●	●	●	●	●	●													●				●	●				●				●	●			●				●	●	●										
●	●			●	●	●													●					●	●			●			●	●	●			●			●	●	●	●									504
	●				●	●	●													●					●	●			●								●			●	●	●	●									
●	●	●	●	●	●			●	●	●			●	●	●			●				●	●				●				●	●			●				●	●	●										
●	●			●	●	●				●	●				●	●			●					●	●			●			●	●	●			●			●	●	●	●									518
	●				●	●	●				●	●				●	●			●					●	●			●								●			●	●	●	●									
●	●	●	●	●	●													●																									●	●	●	●	●			
●	●			●	●	●													●																									●	●	●	●	●			540
	●				●	●	●													●																									●	●	●	●	●			
●	●	●	●	●	●													●																															●		
●	●			●	●	●													●																															●	540
	●				●	●	●													●																															●	
●	●	●	●	●	●													●																									●	●	●	●	●			
●	●			●	●	●													●																									●	●	●	●	●			540
	●				●	●	●													●																									●	●	●	●	●			
●	●	●	●	●	●													●																									●					●	●	
●	●			●	●	●													●																									●					●	●	540
	●				●	●	●													●																									●					●	●	
●	●	●	●	●	●			●	●	●			●	●	●			●																									●	●	●	●	●			
●	●			●	●	●				●	●				●	●			●																									●	●	●	●	●			562
	●				●	●	●				●	●				●	●			●																									●	●	●	●	●			
●	●	●	●	●	●													●																									●						●	
●	●			●	●	●													●																									●						●	562
	●				●	●	●													●																									●						●	
●	●	●	●	●	●			●	●	●			●	●	●			●																									●	●	●	●	●			
●	●			●	●	●				●	●				●	●			●																									●	●	●	●	●			562
	●				●	●	●				●	●				●	●			●																									●	●	●	●	●			
●	●	●	●	●	●			●	●	●			●	●	●			●																									●					●	●	
●	●			●	●	●				●	●				●	●			●																									●					●	●	562
	●				●	●	●				●	●				●	●			●																									●					●	●	

Electrical connections

Discrete valve/individual wiring manifold

Blank Grommet lead wire Ⓐ

● **Lead wire length**
300 mm

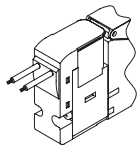

E3 E connector socket terminal attached ⒷⒸ

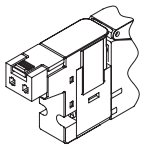

E0 E connector Ⓐ

● **Lead wire length**
300 mm
500 mm
1000 mm
2000 mm
3000 mm

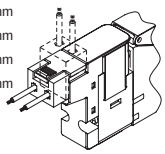

A2N A connector facing down without socket

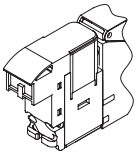

E0N E connector without socket

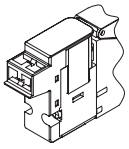

● For AC voltage, dimension a is 3.5 mm ⓐ longer than that for DC voltage.

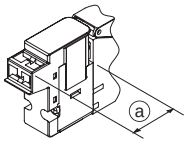

E1 E connector with socket/terminal

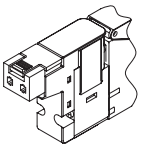

E2 E connector ⒶⒷⒸ

● **Lead wire length**
300 mm
500 mm
1000 mm
2000 mm
3000 mm

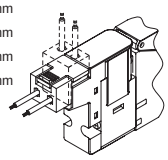

E2N E connector without socket ⒷⒸ

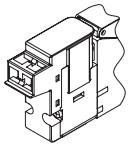

B BN DIN terminal box (BN: no terminal box)

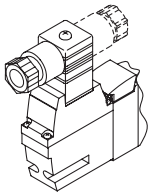

E0*J EJ connector Ⓐ

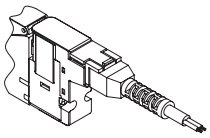

E2*J EJ connector ⒶⒷⒸ

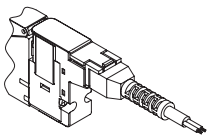

Reduced wiring manifold

T10 T11 Common terminal block (left side) M3 thread/clamping

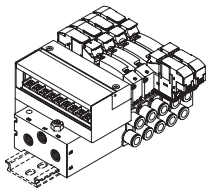

T10R T11R Common terminal block (right side) M3 thread/clamping

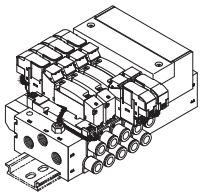

T30 D sub-connector (left)

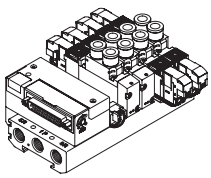

T30R D sub-connector (right)

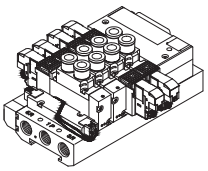

T50 Flat cable with power supply terminal (left side)

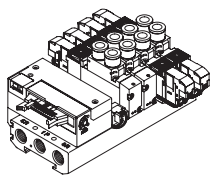

T50R Flat cable with power supply terminal (right side)

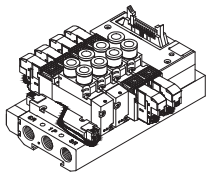

T51 T52 T53 Flat cable without power supply terminal (left side)

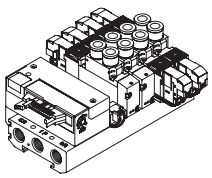

T51R T52R T53R Flat cable without power supply terminal (right side)

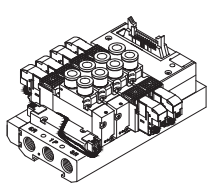

T6*$^{0}_{1}$ Serial transmission

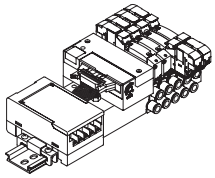

T8*$^{1}_{2}$ Serial transmission (thin)

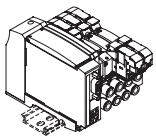

Ⓐ: with lead wire
Ⓑ: with lamp
Ⓒ: with surge suppressor

Manual override

Blank Non-locking/locking common

(standard)

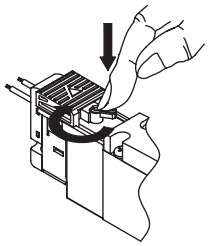

(1) For non-locking, push to turn ON, release to turn OFF

(2) For locking, push and turn 90° clockwise to hold the ON state. Turn counterclockwise to unlock OFF

M Non-locking

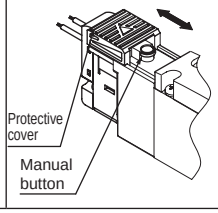

Other options

H With exhaust check valve

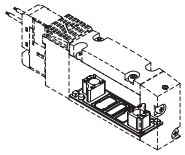

Provided as standard for pilot exhaust

P Mounting plate

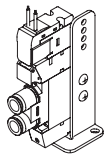

Discrete
(only body piping)

K External pilot

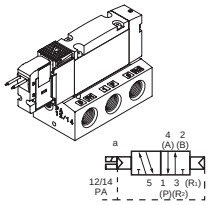

A Ozone/cutting oil proof

Select for cutting oil inflow and ozone measures.

F A/B port filter integrated

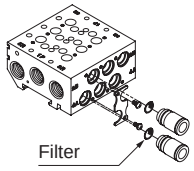

Electric connection circuit diagram

Other options	
Z1 Z3	Air supply spacer Exhaust spacer

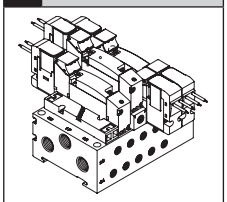

Other options	
D	DIN rail mount

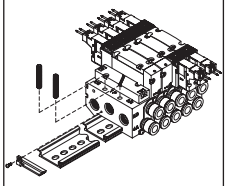

Other options	
W1	Double wiring (with single spare wiring)

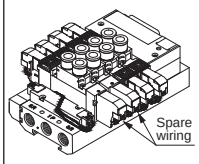

	Electrical connections		Without lead wire	With lead wire	With lamp	With surge suppressor	Without socket	Circuit diagram
	Blank	Grommet lead wire		●				DC
	E0	E connector		●				DC
	E0*J	EJ connector		●				
	E0N	E connector					●	AC 100V
	E1	E connector	●					
	E2	E connector		●	●	●		DC
	E2*J	EJ connector		●	●	●		
	E2N	E connector			●	●	●	AC 100V
	E3	E connector	●		●	●		
	A2N	A connector			●	●	●	DC
	B	DIN terminal box	●		●	●		DC
	BN	DIN terminal box (No terminal box)	●			●		AC 100V AC 200V
Option S	E2	E connector		●	●	●		DC
Option S	E2*J	EJ connector		●	●	●		
Option S	E2N	E connector			●	●	●	
Option E	E2	E connector		●	●	●		DC
Option E	E2*J	EJ connector		●	●	●		
Option E	E2N	E connector			●	●	●	

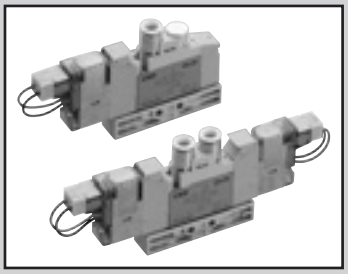

Discrete valve
Body piping

3GA1, 2, 3/4GA1, 2, 3 Series

● Applicable cylinder bore size: ø20 to ø100

JIS symbol

● 3-port valve
2-position single NC

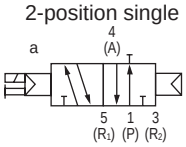

2-position single NO

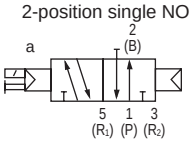

● Dual 3-port valve integrated
(A side valve: NC, B side valve: NC)

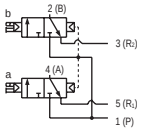

(A side valve: NC, B side valve: NO)

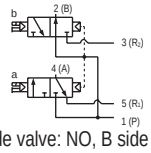

(A side valve: NO, B side valve: NC)

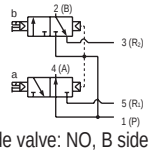

(A side valve: NO, B side valve: NO)

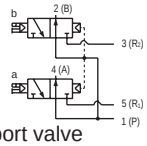

● 5-port valve
2-position single

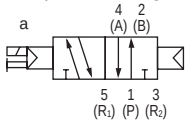

2-position double

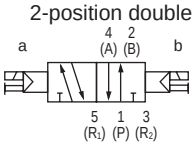

3-position
All ports closed

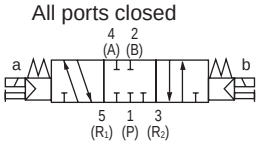

3-position A/B/R connection

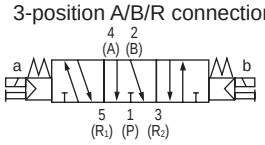

3 positions P/A/B connection

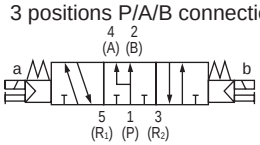

Structure and material restriction

	Structure	Material restriction			Model No.
P7 Series	Dust generation preventing				– P70
	Dust generation preventing	Copper-based materials prohibited	Silicon-based materials prohibited	Halogen-based materials prohibited (fluorine, chlorine, bromine)	– P74 Custom order product

Common specifications

Item	Description
Valve and operation	Pilot operated soft spool valve
Working fluid	Compressed air
Max. working pressure MPa	0.7
Min. working pressure MPa	0.2
Proof pressure MPa	1.05
Ambient temperature °C	-5 to 55 (no freezing)
Fluid temperature °C	5 to 55
Manual override	Non-locking/locking common (standard)
Pilot exhaust method	Main valve/pilot valve common exhaust
Lubrication *1	Not required
Degree of protection *2	Dust-proof
Vibration resistance m/s2	50 or less
Shock resistance m/s2	300 or less
Atmosphere	Cannot be used in corrosive gas environments

*1: Use turbine oil Class 1 ISO VG32 for lubrication. Excessive or intermittent lubrication results in unstable operation.
*2: Avoid water drops or oil, etc., during use.IP65 (water jet proof) applies for DIN terminal box specifications. However, the specified outer diameter of the cord and tightening torque must be used for fixing in place.

Electrical specifications

Item		Description					
Rated voltage V		DC 24	DC 12	DC 5	DC 3	AC 100	AC 200
Voltage fluctuation range		±10%					
Holding current (A) (*3)	Standard	0.015 (0.017)	0.030 (0.034)	0.072 (0.082)	0.120 (0.136)	0.009 (0.009)	0.006 (0.006)
	With low exoergic/energy circuit	0.005	0.010	-		-	
Power consumption W (*3)	Standard	0.35(0.40)		0.35(0.40)		-	
	With low exoergic/energy circuit	0.1		-		-	
Apparent power VA (*3) (*4)	Standard	-		-		0.93 (0.98)	1.40
Thermal class		energy circuit					
Surge suppressor		Standard					
Indicator		Lamp (option)					

*3: Values in ( ) apply when a lamp is attached.In addition, the type with low exoergic/energy circuit is only available with lamp.
*4: 200 VAC is the value of DIN terminal box (with lamp).

Individual specifications

Port size		3GA1/4GA1	3GA2/4GA2	3GA3/4GA3
Rc thread, M5	A/B port	Barbed fitting ø1.8 push-in fitting ø1.8, ø4, ø6 M5	Push-in fitting ø4, ø6, ø8 Rc1/8	Push-in fitting ø6, ø8, ø10 Rc1/4
	P/R1/R2 port	M5	Rc1/8	Rc1/4
NPT thread, M5	A/B port	Push-in fitting ø1/8 inch, ø5/32 inch	Push-in fitting ø1/4 inch, ø5/16 inch 1/8NPT	Push-in fitting ø5/16 inch, ø3/8 inch 1/4NPT (*5)
	P/R1/R2 port	M5	1/8NPT	1/4NPT (*5)
G thread	A/B port	–	Push-in fitting ø4, ø6, ø8 G1/8	Push-in fitting ø8, ø10 G1/4
	P/R1/R2 port	–	G1/8	G1/4

*5: This is a custom order product.

Performance/characteristics by model

Item			3GA1		3GA2		3GA3		4GA1		4GA2		4GA3	
			ON	OFF	ON	OFF	ON	OFF	ON	OFF	ON	OFF	ON	OFF
Response time ms	Dual 3-port valve integrated		9	12	12	29	–	–	–	–	–	–	–	–
	2-position	Single	12	12	19	19	25	28	12	12	19	19	25	28
		Double	–	–	–	–	–	–	9	–	18	–	24	–
	3-position	ABR connection	–	–	–	–	–	–	8	15	17	30	23	45

Values including a lamp surge suppressor. The response time is the value at the 0.5 MPa supply pressure, 20°C, with no lubrication. It depends on the pressure and the lubricant quality.

Weight

Item				3GA1	3GA2	3GA3	4GA1	4GA2	4GA3
Weight g	2-position	Single	Grommet lead wire	48 (41)	104 (74)	142 (100)	48 (41)	109 (79)	151 (109)
			E connector	50 (43)	106 (76)	144 (102)	50 (43)	111 (81)	153 (111)
			DIN terminal box	–	141 (111)	177 (135)	–	146 (116)	186 (144)
		Double	Grommet lead wire	–	–	–	65 (58)	127 (97)	174 (128)
			E connector	–	–	–	69 (62)	131 (101)	178 (132)
			DIN terminal box	–	–	–	–	169 (139)	214 (168)
	3-position	All ports closed	Grommet lead wire	–	–	–	67 (60)	139 (109)	183 (141)
			E connector	–	–	–	71 (64)	143 (113)	187 (145)
			DIN terminal box	–	–	–	–	181 (151)	223 (181)

- Values in ( ) do not include a piping adapter. Values for the E connector include the socket assembly (with 300 mm lead wire). For the EJ connector, add 16 g/connector to the E connector weight.
- The weight of dual 3-port valve integrated is the same as that of 2-position double.

Flow characteristics

Model No.	Solenoid position		P→A/B		A/B→R1/R2	
			C [dm³/(s·bar)]	b	C [dm³/(s·bar)]	b
3GA1 4GA1	Dual 3-port valve integrated		0.98	0.45	0.71	0.34
	2-position		1.2	0.47	0.72	0.37
	3-position	All ports closed	1.1	0.39	0.70	0.34
		ABR connection	1.1	0.33	0.72	0.34
		PAB connection	1.3	0.61	0.72	0.36
3GA2 4GA2	Dual 3-port valve integrated		1.8	0.29	2.3	0.32
	2-position		2.4	0.33	2.8	0.30
	3-position	All ports closed	2.2	0.28	2.5	0.28
		ABR connection	2.3	0.26	2.8	0.27
		PAB connection	2.5	0.38	2.4	0.30
3GA3 4GA3	2-position		3.4	0.29	4.0	0.24
	3-position	All ports closed	3.1	0.27	3.4	0.28
		ABR connection	3.1	0.33	4.1	0.20
		PAB connection	3.5	0.43	3.4	0.32

*1: Effective cross-sectional area S and sonic conductance C are converted as S ≈ 5.0 × C.

Ozone proof specifications • Cutting oil prohibited specifications

This can be set by selecting option “A” of Ⓔ in how to order on page 432.

3GA1, 2, 3/4GA1, 2, 3 Series

Discrete valve; body piping

How to order

4GA1 1 0 R - C6 - E2 ( ) - 1 - P70

3GA1 1 0 R - C6 - E2 ( ) - 1 - P70

Discrete valve for mounting base

4GA1 1 9 R - C6 - E2 H - 3 - P70

Discrete 3-port valve for mounting base

3GA1 1 9 R - C6 - E2 H - 3 - P70

Ⓐ Model No.

Ⓑ Solenoid position

Ⓒ Port size

Ⓓ Electrical connections
Refer to page 429 for the circuit diagram with surge suppressor/lamp.

Ⓔ Option

Ⓕ Voltage

Ⓖ Clean room specifications

Precautions for model No. selection

*1: For the 3GA normally closed, the piping connection 2 (B) and 3 (R2) ports are plugged.
For the 3GA normally open, avoid plugging the 5 (R1) port. Not doing so could cause malfunctions.
*2: Dimensions are the same as the respective 2-position double solenoid.
*3: 4G3 is a custom order product.
***4: 3-position all ports closed and PAB connection are not provided with the exhaust check valve. Refer to page 751 for details on the exhaust check valve.**
5: Only E2 and E2*J connectors and 12/24 VDC are supported.
In addition, selecting a combination of surgeless "S" and the low exoergic/energy-saving circuit "E" is not allowed.
*6: Applicable to surgeless specifications
*7: P port is equipped with a filter as standard.
*8: Supported only for DIN terminal box.
*9: A (ozone compatible) and Ⓖ clean room specifications P74 cannot be combined.
*10: Specifications which do not allow copper-based/silicon-based/halogen-based materials apply to the main valve section.
*11: P74 Series is a custom order product.

Code	Content		Ⓐ Model No. 3GA1	3GA2	3GA3	4GA1	4GA2	4GA3
Ⓑ Solenoid position								
1	2-position single					●	●	●
2	2-position double					●	●	●
3	3-position all ports closed					●	●	●
4	3-position ABR connection					●	●	●
5	3-position P/A/B connection					●	●	●
1	2-position single normally closed	(*1)	●	●	●			
11	2-position single normally open	(*1)	●	●	●			
66	Dual 3-port valve integrated *2	A side valve: Normally closed B side valve: Normally closed	●	●				
67	Dual 3-port valve integrated *2	A side valve: Normally closed B side valve: Normally open	●	●				
76	Dual 3-port valve integrated *2	A side valve: Normally open B side valve: Normally closed	●	●				
77	Dual 3-port valve integrated *2	A side valve: Normally open B side valve: Normally open	●	●				

Ⓒ Port size

Port	4 (A)/2 (B) port	P/R1/R2 port (1) = M5 (2) = Rc1/8 (3) = Rc1/4					
CF	ø1.8 barbed fitting (applicable tube UP-9102-**)	(1)			(1)		
C18	ø1.8 push-in fitting (applicable tube UP-9402-**)	(1)			(1)		
C4	ø4 push-in fitting	(1)	(2)		(1)	(2)	
C6	ø6 push-in fitting	(1)	(2)	(3)	(1)	(2)	(3)
C8	ø8 push-in fitting		(2)	(3)		(2)	(3)
C10	ø10 push-in fitting			(3)			(3)
M5	M5	(1)			(1)		
06	Rc1/8		(2)			(2)	
08	Rc1/4			(3)			(3)
Port	**4 (A)/2 (B) port**	**P/R1/R2 port (1) = M5 (5) = 1/8NPT (6) = 1/4NPT**					
C3N	ø1/8 inch push-in fitting	(1)			(1)		
C4N	ø5/32 inch push-in fitting	(1)			(1)		
C6N	ø1/4 inch push-in fitting		(5)			(5)	
C8N	ø5/16 inch push-in fitting (*3)		(5)	(6)		(5)	(6)
C10N	ø3/8 inch push-in fitting (*3)			(6)			(6)
06N	1/8NPT		(5)			(5)	
08N	1/4NPT (*3)			(6)			(6)
Port	**4 (A)/2 (B) port**	**P/R1/R2 port (8)=G1/8, (9)=G1/4**					
C4G	ø4 push-in fitting		(8)			(8)	
C6G	ø6 push-in fitting		(8)			(8)	
C8G	ø8 push-in fitting		(8)	(9)		(8)	(9)
C10G	ø10 push-in fitting			(9)			(9)
06G	G1/8		(8)			(8)	
08G	G1/4			(9)			(9)

Ⓓ Electrical connections

Refer to the electrical connection list on next page.

Ⓔ Option

Blank	Non-locking and locking model shared manual override	●	●	●	●	●	●
M	Non-locking manual override	●	●	●	●	●	●
H	With exhaust check valve (*4)	●	●	●	●	●	●
P	Mounting plate	●	●	●	●	●	●
A	Ozone/cutting oil proof	●	●	●	●	●	●
S	Surgeless (*5)	●	●	●	●	●	●
E	Low exoergic/energy-saving circuit (*5), (*6)	●	●	●	●	●	●
F	A/B port filter integrated (*7)	●	●	●	●	●	●

Ⓕ Voltage

1	100 VAC (with rectifier circuit)	●	●	●	●	●	●
2	200 VAC (with rectifier circuit) (*8)		●	●		●	●
3	24 VDC	●	●	●	●	●	●
4	12 VDC	●	●	●	●	●	●
7	3 VDC	○	○	○	○	○	○
8	5 VDC	○	○	○	○	○	○

Ⓖ Clean room specifications (*9, 10, 11)

	Structure	Material restriction						
P70	Exhaust treatment	-	●	●	●	●	●	●
P74	Exhaust treatment	Copper-based/silicon-based/ halogen-based materials (fluorine, chlorine, bromine) are prohibited.	○	○	○	○	○	○

is not available.
○ Custom order products. Contact CKD for details.

(Electrical connection list)

		Ⓐ Model No.					
		3GA1	3GA2	3GA3	4GA1	4GA2	4GA3
Ⓓ Electrical connections							
Blank	Grommet lead wire (300 mm) (*9)	●	●	●	●	●	●
B	DIN terminal box (Pg7) with surge suppressor/lamp (*10)(*12)		●	●		●	●
BN	DIN terminal box (Pg7) (no terminal box) with surge suppressor (*10)(*12)		●	●		●	●
E connector (up/lateral common)							
E0	Lead wire (300 mm) (*11)	●	●	●	●	●	●
E00	Lead wire (500 mm) (*11)	●	●	●	●	●	●
E01	Lead wire (1000 mm) (*11)	●	●	●	●	●	●
E02	Lead wire (2000 mm) (*11)	●	●	●	●	●	●
E03	Lead wire (3000 mm) (*11)	●	●	●	●	●	●
E0N	Without lead wire (without socket)	●	●	●	●	●	●
E1	Without lead wire (with socket/terminal) (*11)	●	●	●	●	●	●
E2	Lead wire (300 mm) with surge suppressor/lamp	●	●	●	●	●	●
E20	Lead wire (500 mm) with surge suppressor/lamp	●	●	●	●	●	●
E21	Lead wire (1000 mm) with surge suppressor/lamp	●	●	●	●	●	●
E22	Lead wire (2000 mm) with surge suppressor/lamp	●	●	●	●	●	●
E23	Lead wire (3000 mm) with surge suppressor/lamp	●	●	●	●	●	●
E2N	Without lead wire (without socket) with surge suppressor/lamp	●	●	●	●	●	●
E3	Without lead wire (with socket/terminal) with surge suppressor/lamp	●	●	●	●	●	●
EJ connector (socket with cover, up/lateral common)							
E01J	Lead wire (1000 mm) (*11)	●	●	●	●	●	●
E02J	Lead wire (2000 mm) (*11)	●	●	●	●	●	●
E03J	Lead wire (3000 mm) (*11)	●	●	●	●	●	●
E21J	Lead wire (1000 mm) with surge suppressor/lamp	●	●	●	●	●	●
E22J	Lead wire (2000 mm) with surge suppressor/lamp	●	●	●	●	●	●
E23J	Lead wire (3000 mm) with surge suppressor/lamp	●	●	●	●	●	●

*12: The grommet lead wire specifications are only applicable to DC voltages.
*13: AC voltage and 12/24 VDC are supported. The lamp is incorporated in the terminal box.
*14: AC voltage is provided with a rectifier circuit.
*15: The terminal box is a EN175301-803Type C (old DIN 43650-C) compliant product. Refer to pages 756 and 757 for details.

Electrical connections

Blank Grommet lead wire

● **Lead wire length**
300 mm

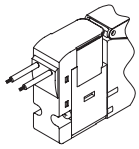

E1 E3 E connector with socket/terminal

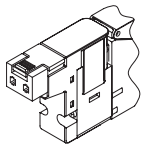

E0 E2 E connector

● **Lead wire length**
300 mm
500 mm
1000 mm
2000 mm
3000 mm

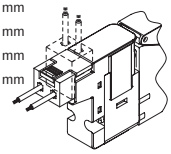

B DIN terminal box

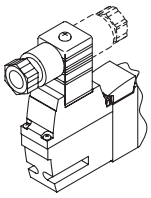

E0N E2N E connector without socket

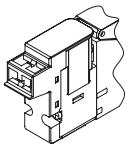

BN DIN terminal box No terminal box

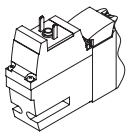

E0*J E2*J EJ connector

● **Lead wire length**
1 m
2 m
3 m

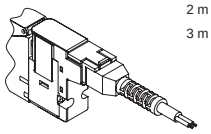

SCPD3
SCM
SSD2
MDC2
SMG
LCM
LCR
LCG
LCX
STM
STG
STR2
MRL2
GRC
Cylinder switch
MN3E MN4E
4GA/B
M4GA/B
MN4GA/B
F.R (module unit)
Clean F.R
Precision R
Press gauge Diff. press gauge
Electro-pneumatic R
Speed controller
Auxiliary valve
Fitting/ tube
Clean air unit
Pressure sensor
Flow rate sensor
Valve for air blow
Ending

Dimensions CAD

3GA110R-P7* *For the NPT thread and G thread specifications, refer to pages 464 to 471.
*Refer to page 753 for details on mounting holes.

● 2-position single normally closed grommet lead wire (blank)

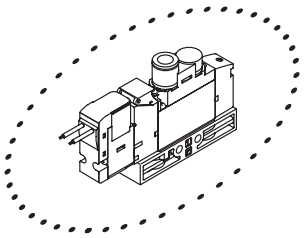

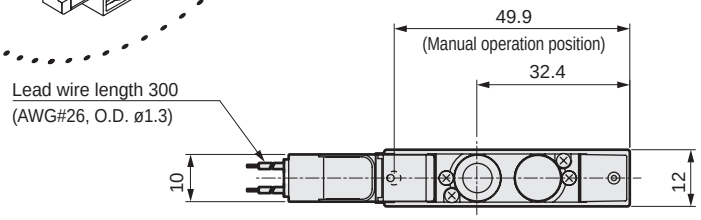

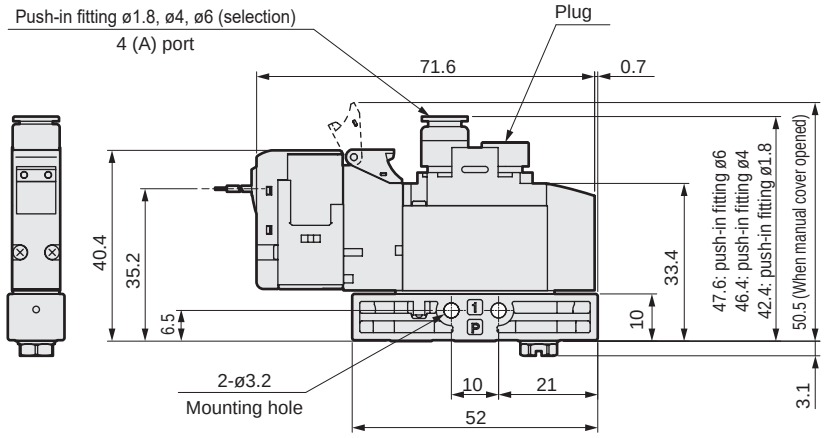

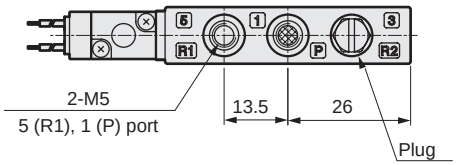

● Mounting plate (P)

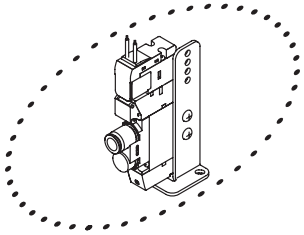

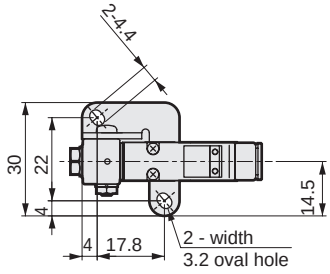

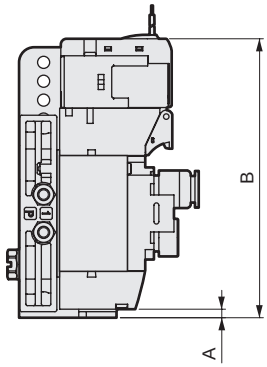

Electrical connections	A	B
Grommet lead wire	2.2	73.8
E, EJ connector (facing up), DC voltage		82
E, EJ connector (facing up), AC voltage		85.5

● M5 female thread (M5)

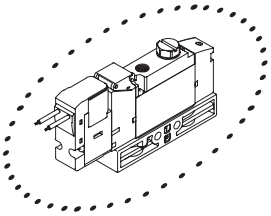

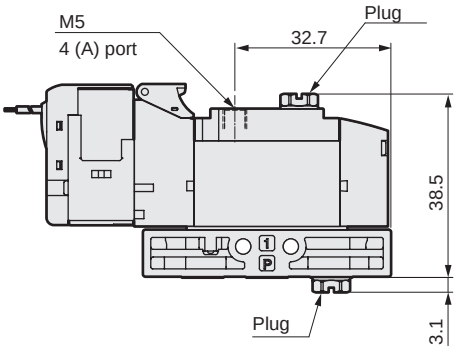

● ø1.8 barbed fitting (CF)

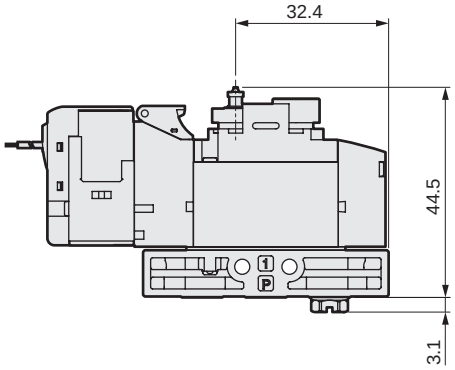

Dimensions

● E connector (E)

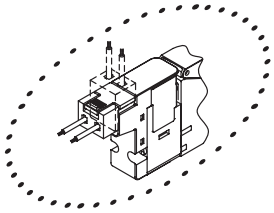

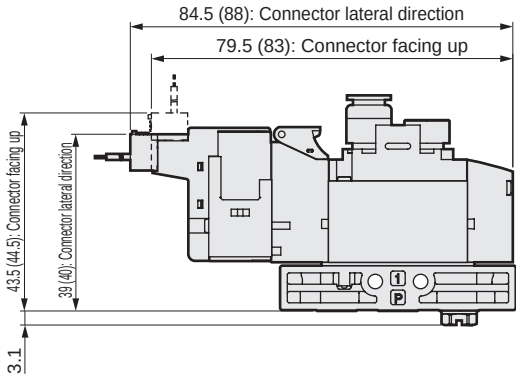

Note: Values in ( ) are applicable to AC voltages.

● EJ connector (E**J)

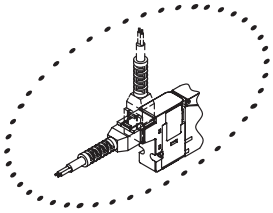

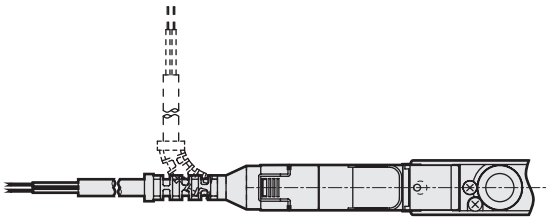

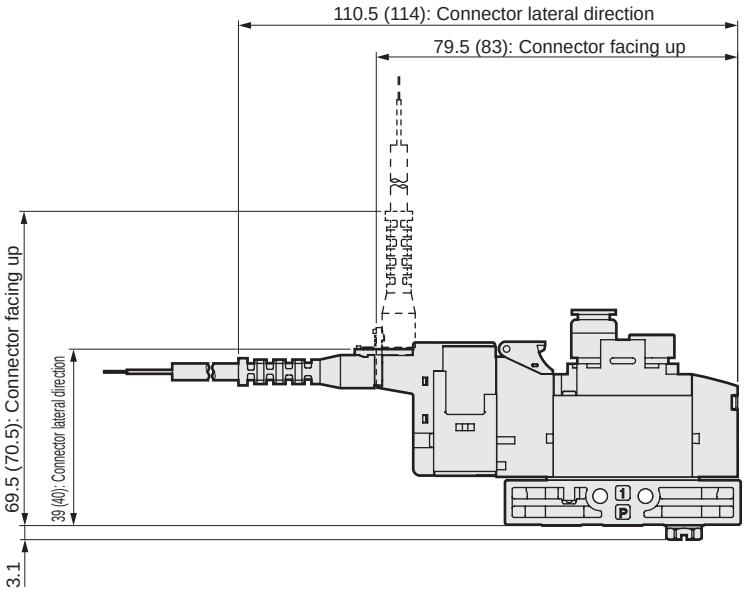

Note: Values in ( ) are applicable to AC voltages.

SCPD3
SCM
SSD2
MDC2
SMG
LCM
LCR
LCG
LCX
STM
STG
STR2
MRL2
GRC
Cylinder switch
MN3E MN4E
4GA/B
M4GA/B
MN4GA/B
F.R (module unit)
Clean F.R
Precision R
Press gauge Diff. press gauge
Electro-pneumatic R
Speed controller
Auxiliary valve
Fitting/ tube
Clean air unit
Pressure sensor
Flow rate sensor
Valve for air blow
Ending

Dimensions CAD

3GA1110R-P7* * For the NPT thread and G thread specifications, refer to pages 464 to 471.

● 2-position single normally open grommet lead wire (blank)

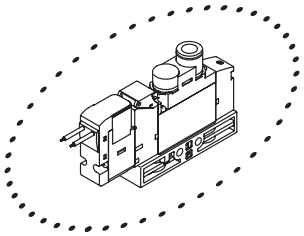

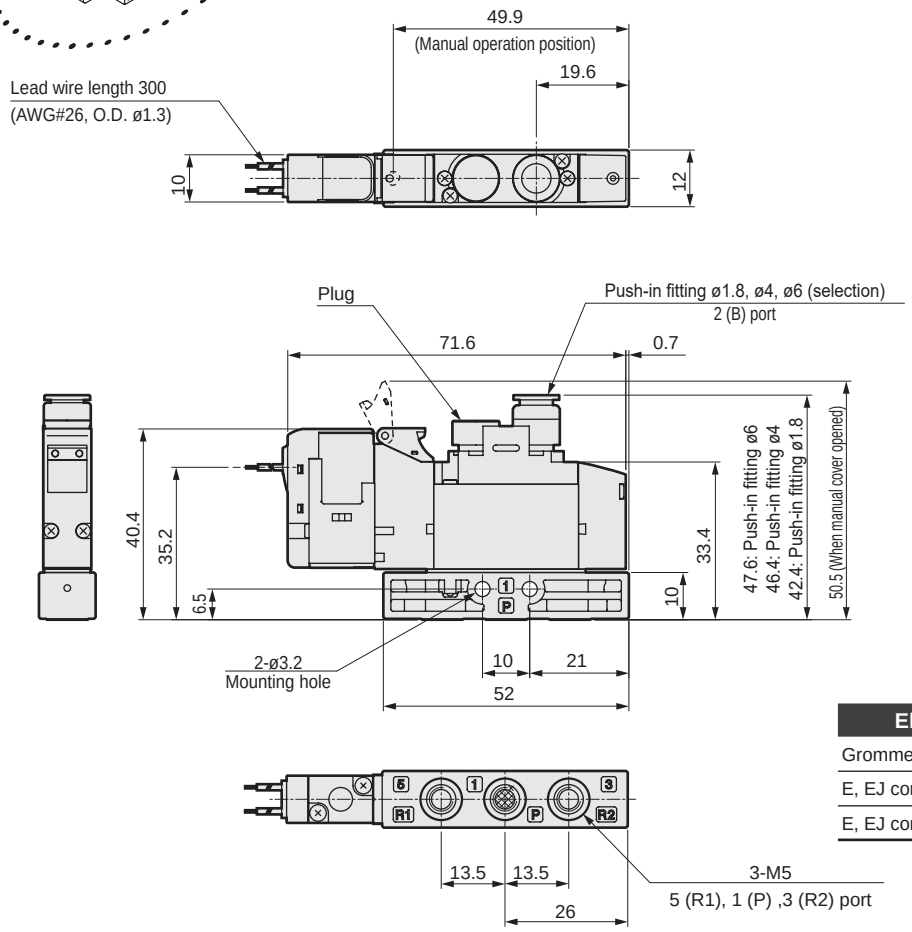

● Mounting plate (P)

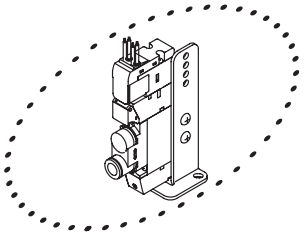

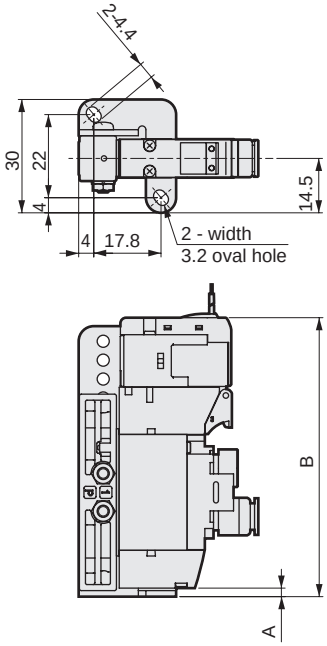

Electrical connections	A	B
Grommet lead wire	2.2	73.8
E, EJ connector (facing up), DC voltage		82
E, EJ connector (facing up), AC voltage		85.5

● M5 female thread (M5)

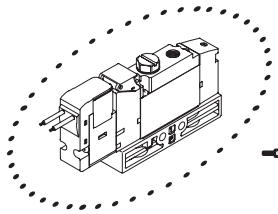

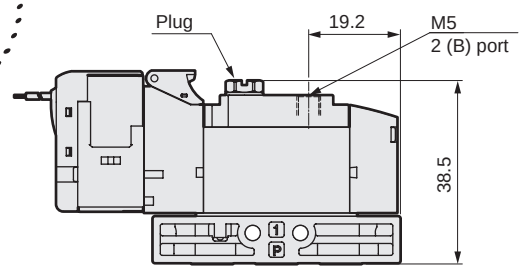

● ø1.8 barbed fitting (CF)

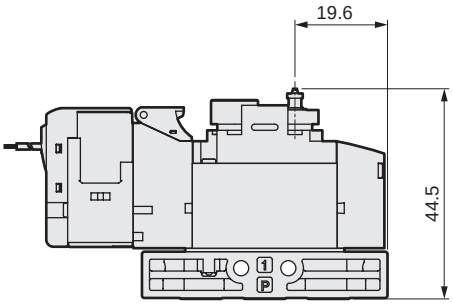

Dimensions

● E connector (E)

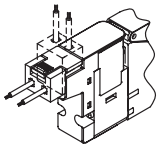

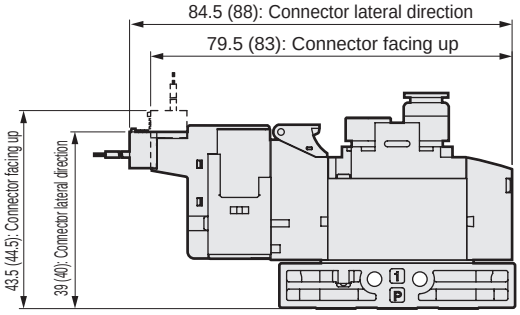

Note: Values in ( ) are applicable to AC voltages.

● EJ connector (E**J)

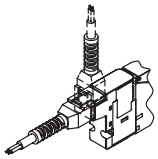

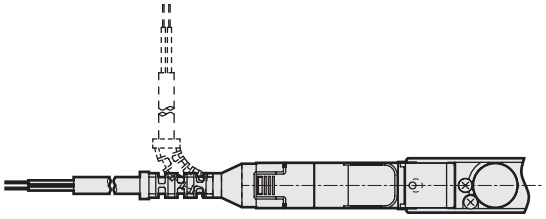

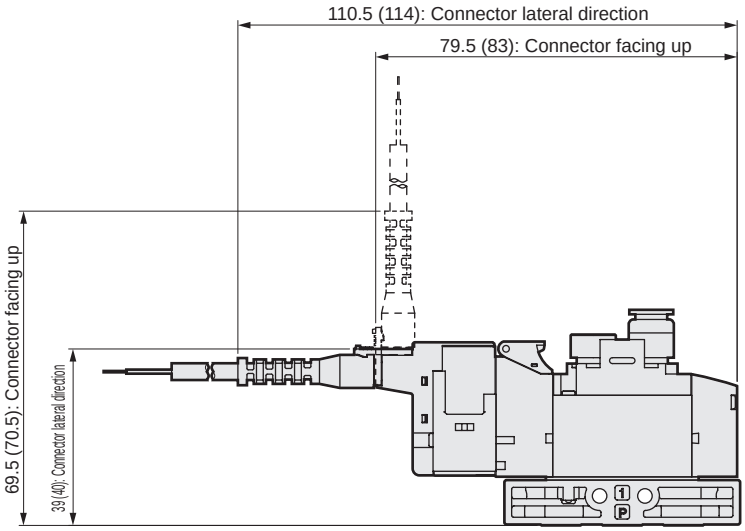

Note: Values in ( ) are applicable to AC voltages.

SCPD3
SCM
SSD2
MDC2
SMG
LCM
LCR
LCG
LCX
STM
STG
STR2
MRL2
GRC
Cylinder switch
MN3E MN4E
4GA/B
M4GA/B
MN4GA/B
F.R (module unit)
Clean F.R
Precision R
Press gauge Diff. press gauge
Electro-pneumatic R
Speed controller
Auxiliary valve
Fitting/ tube
Clean air unit
Pressure sensor
Flow rate sensor
Valve for air blow
Ending

Dimensions CAD

3GA210R-P7* * For the NPT thread and G thread specifications, refer to pages 464 to 471.

● 2-position single normally closed grommet lead wire (blank)

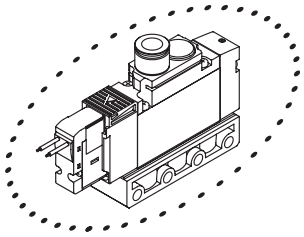

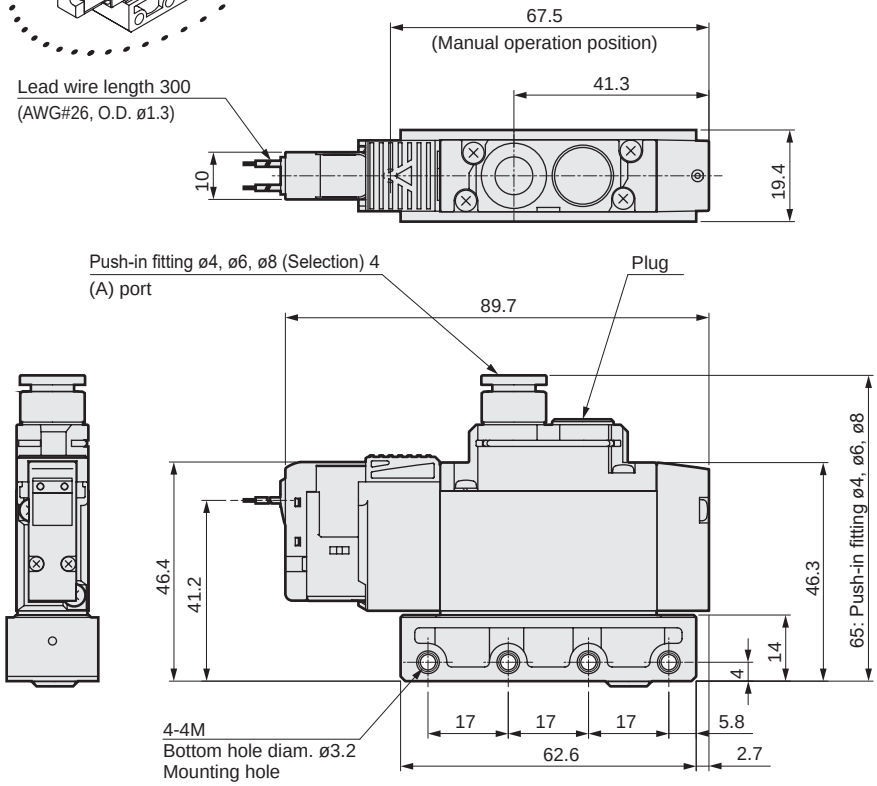

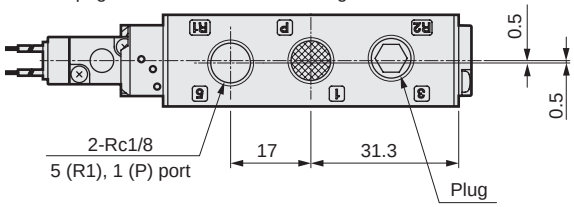

● Mounting plate (P)

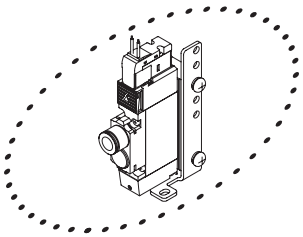

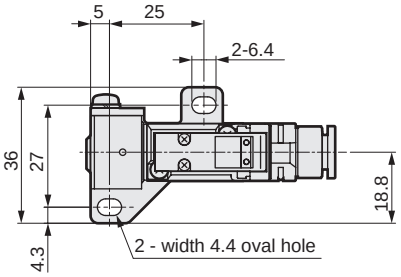

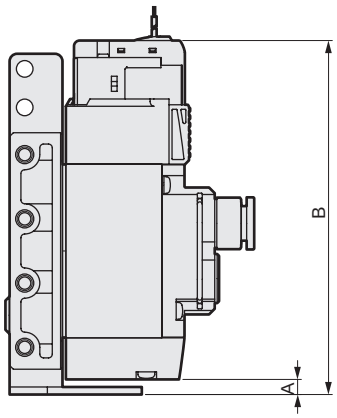

Electrical connections	A	B
Grommet lead wire	4	93.7
E, EJ connector (facing up), DC voltage		102
E, EJ connector (facing up), AC voltage		105.5
DIN terminal box (inner direction)		112.7

● Rc1/8 female thread (06)

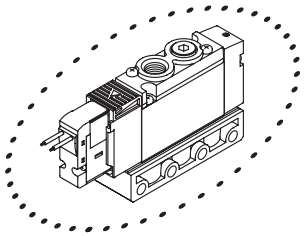

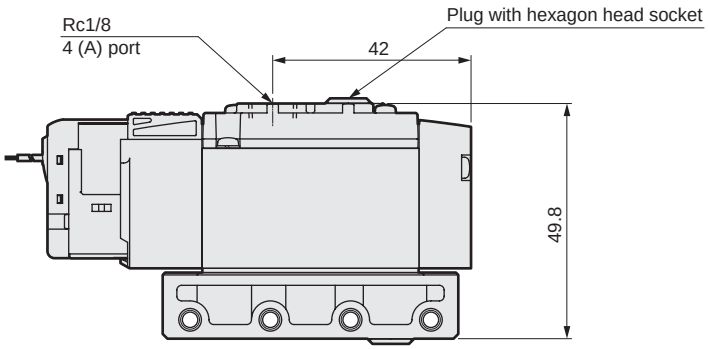

Dimensions

● E connector (E)

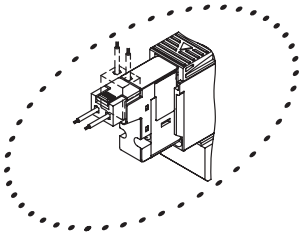

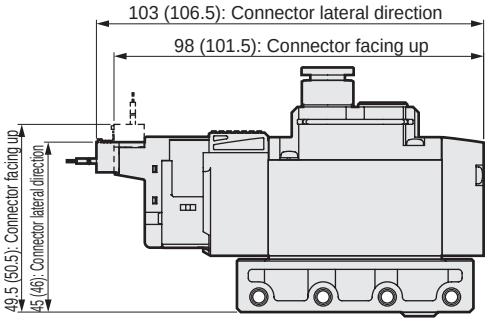

Note: Values in ( ) are applicable to AC voltages.

● EJ connector (E**J)

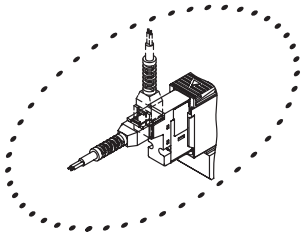

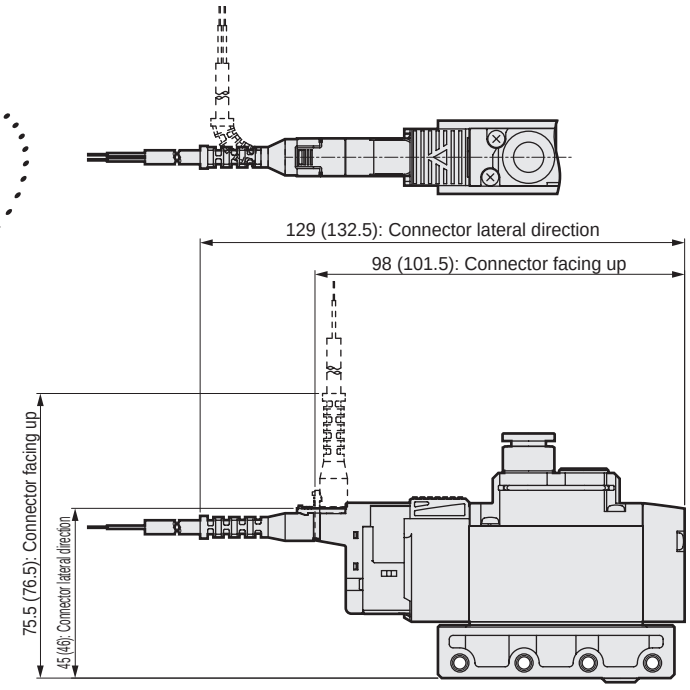

Note: Values in ( ) are applicable to AC voltages.

● DIN terminal box (B)

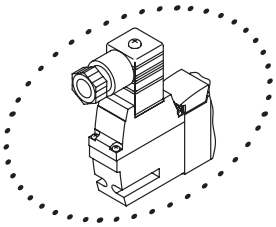

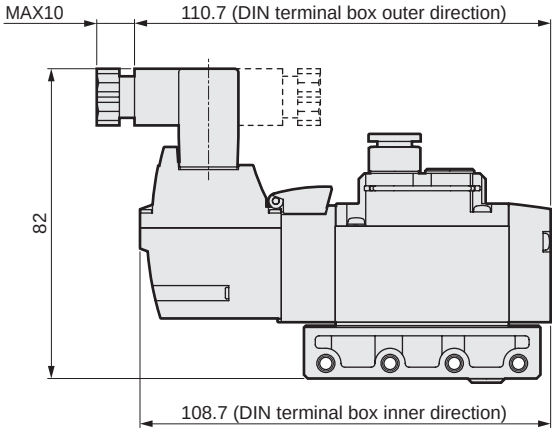

Note: The DIN terminal box assembly is shipped facing inward.

Dimensions CAD

3GA2110R-P7* * For the NPT thread and G thread specifications, refer to pages 464 to 471.

● 2 position single normally open grommet lead wire (blank)

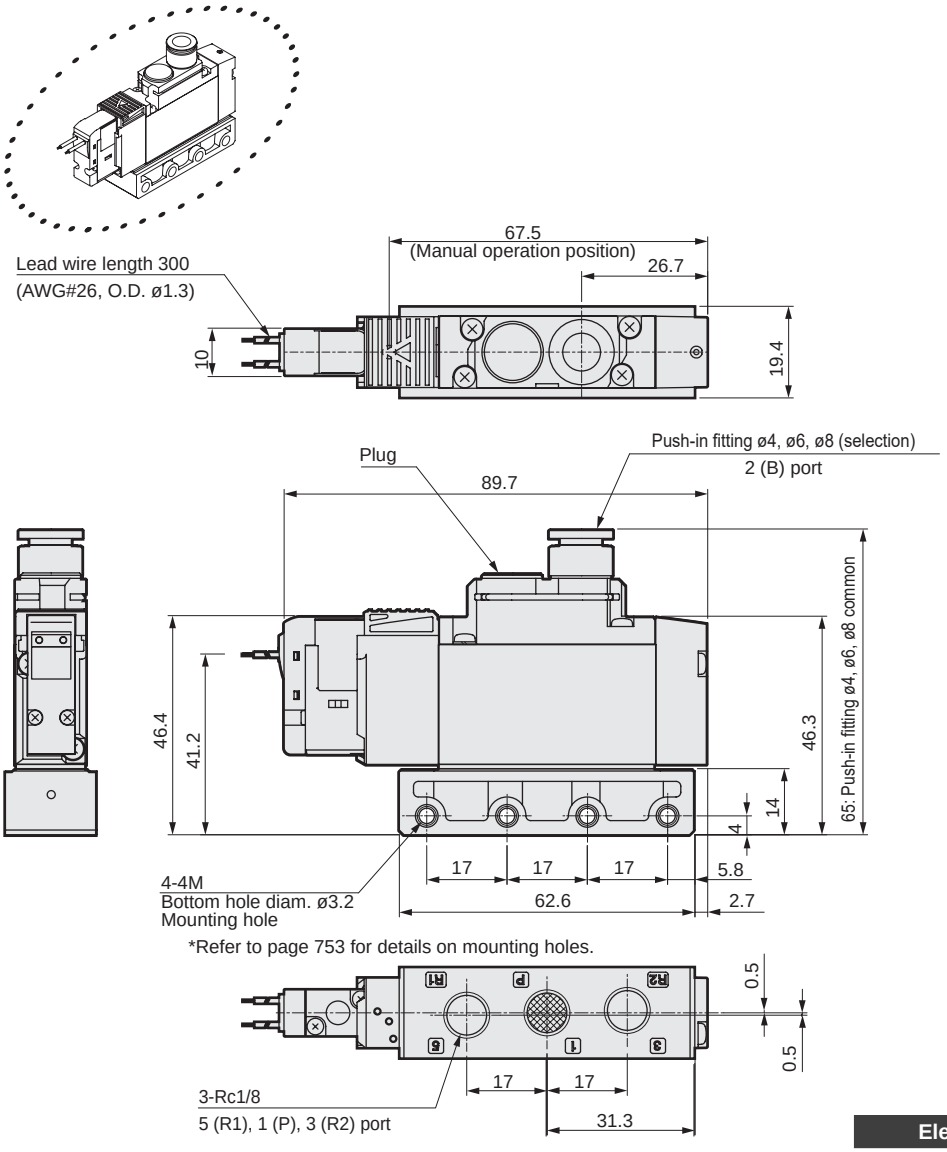

● Mounting plate (P)

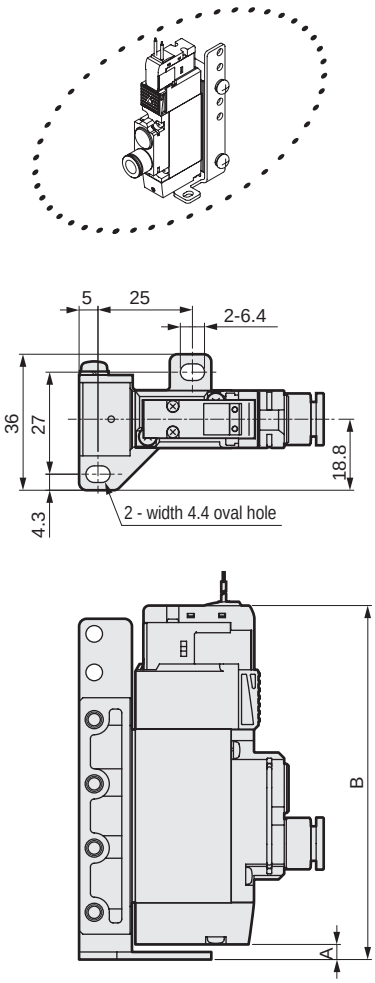

Electrical connections	A	B
Grommet lead wire	4	93.7
E, EJ connector (facing up), DC voltage		102
E, EJ connector (facing up), AC voltage		105.5
DIN terminal box (inner direction)		112.7

● Rc1/8 female thread (06)

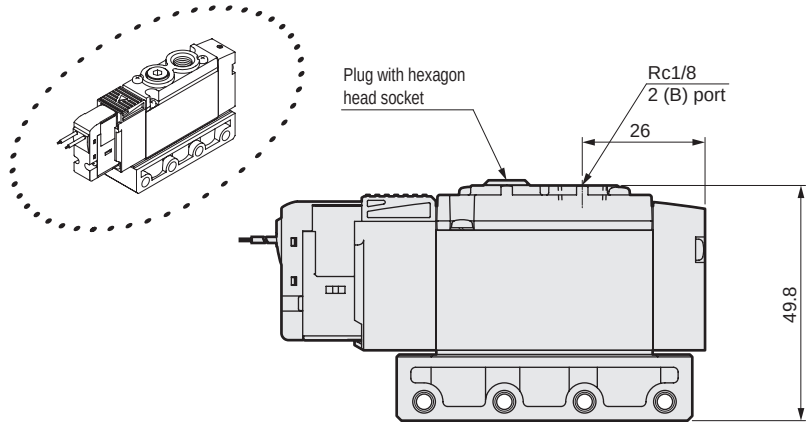

Dimensions

● E connector (E)

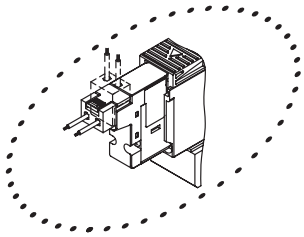

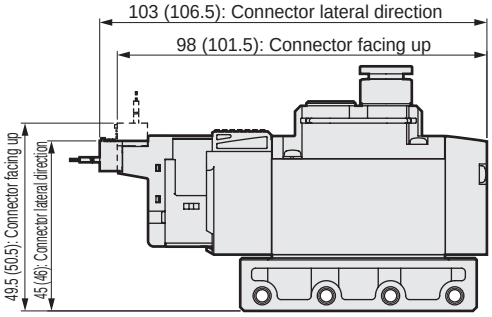

Note: Values in ( ) are applicable to AC voltages.

● EJ connector (E**J)

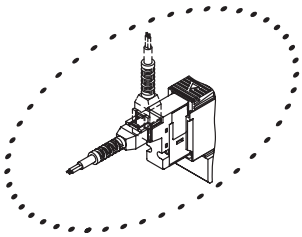

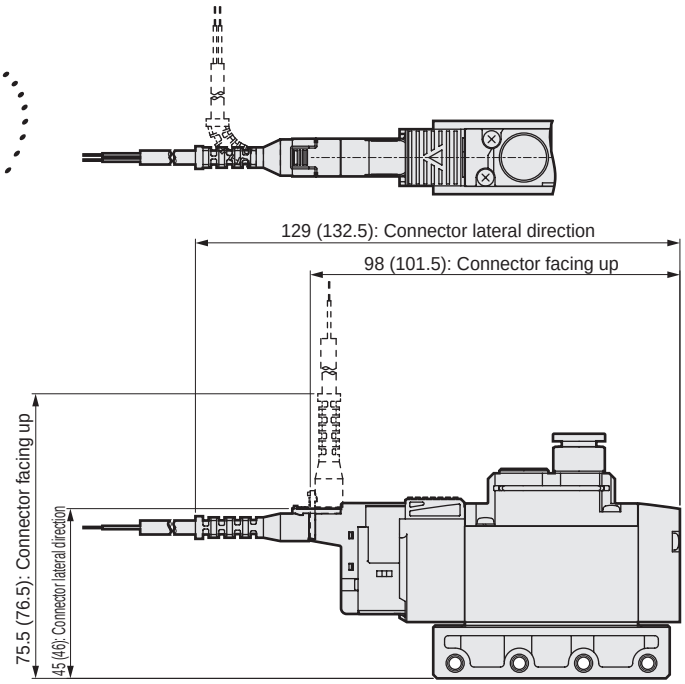

Note: Values in ( ) are applicable to AC voltages.

● DIN terminal box (B)

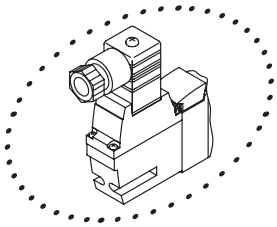

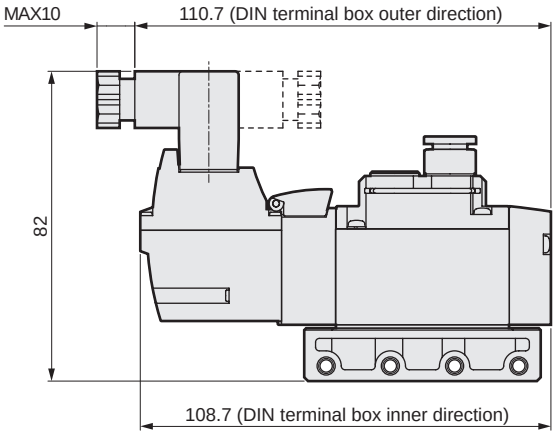

Note: The DIN terminal box assembly is shipped facing inward.

SCPD3
SCM
SSD2
MDC2
SMG
LCM
LCR
LCG
LCX
STM
STG
STR2
MRL2
GRC
Cylinder switch
MN3E MN4E
4GA/B
M4GA/B
MN4GA/B
F.R (module unit)
Clean F.R
Precision R
Press gauge Diff. press gauge
Electro-pneumatic R
Speed controller
Auxiliary valve
Fitting/ tube
Clean air unit
Pressure sensor
Flow rate sensor
Valve for air blow
Ending

Dimensions CAD

3GA310R-P7* * For the NPT thread and G thread specifications, refer to pages 464 to 471.

● 2-position single normally closed grommet lead wire (blank)

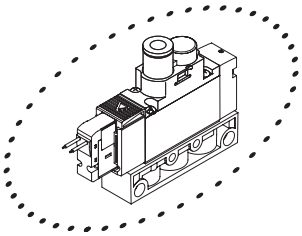

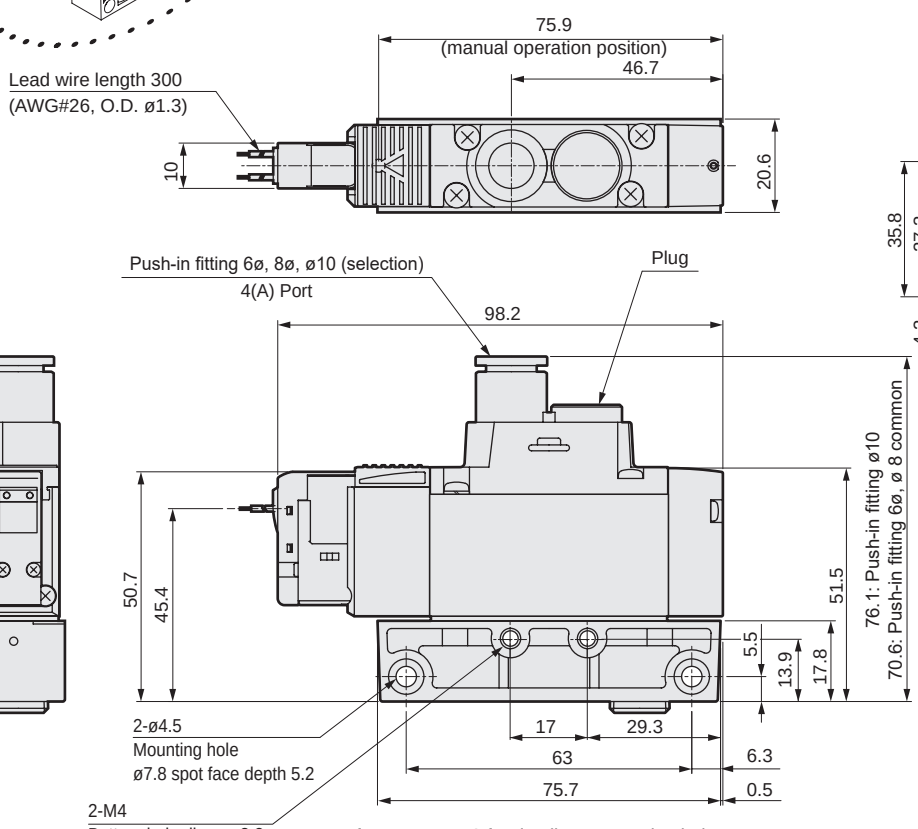

*Refer to page 753 for details on mounting holes.

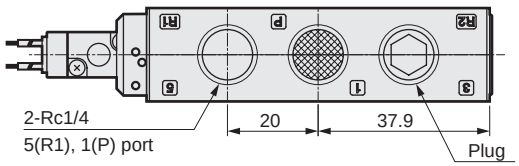

● Mounting plate (P)

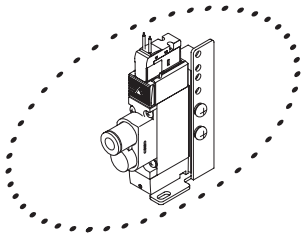

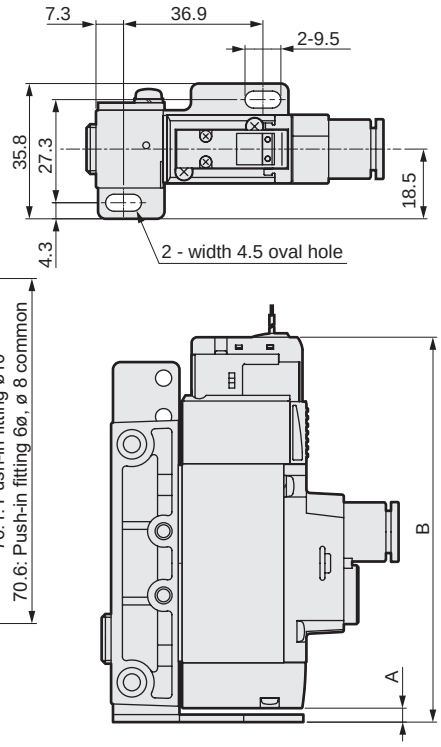

Electrical connections	A	B
Grommet lead wire	3.7	101.8
E, EJ connector (facing up), DC voltage		110
E, EJ connector (facing up), AC voltage		113.5
DIN terminal box (inner direction)		120.9

● RC1/4 female thread (08)

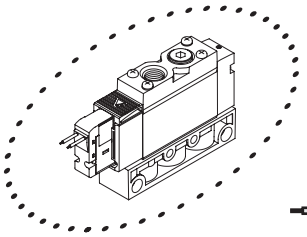

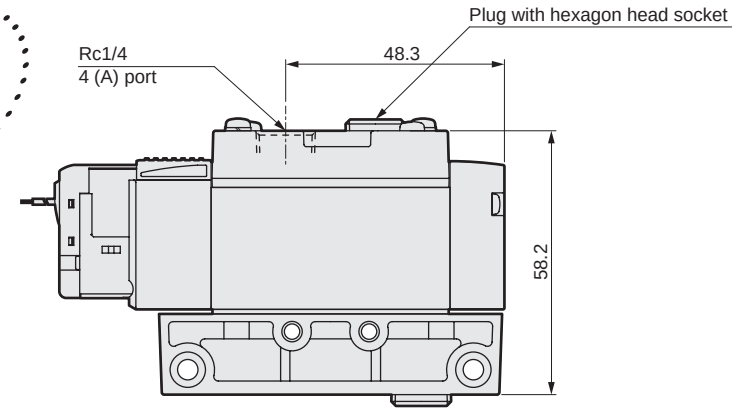

Dimensions

● E connector (E)

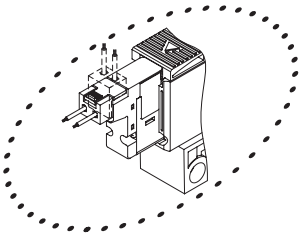

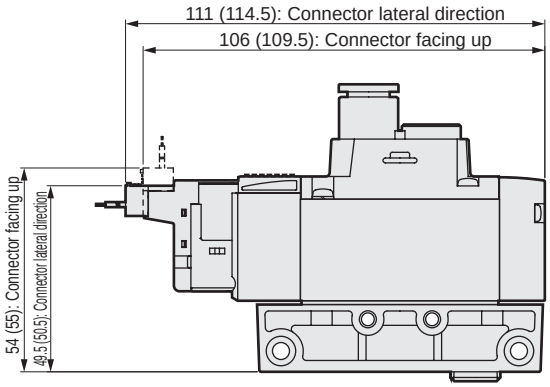

Note: Values in ( ) are applicable to AC voltages.

● EJ connector (E**J)

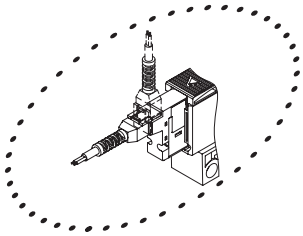

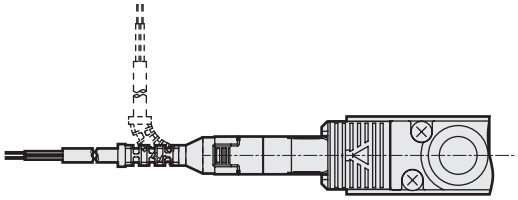

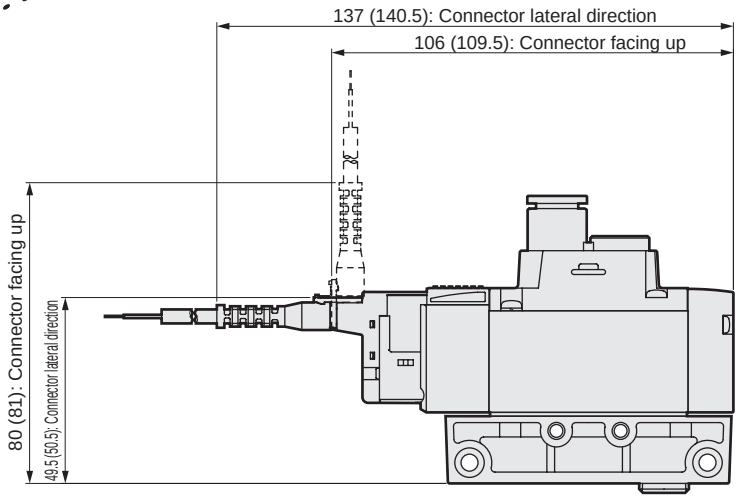

Note: Values in ( ) are applicable to AC voltages.

● DIN terminal box (B)

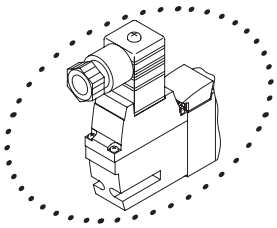

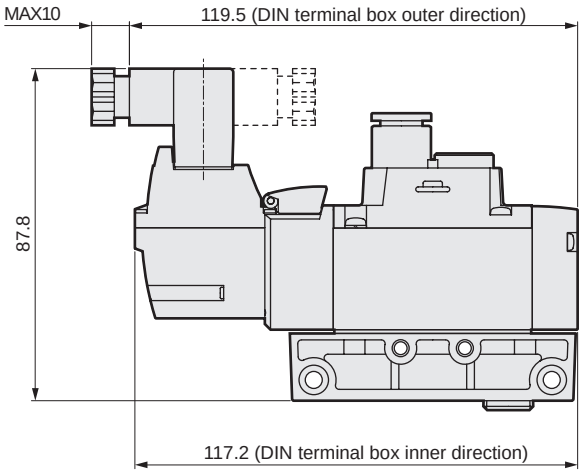

Note: The DIN terminal box assembly is shipped facing inward.

SCPD3
SCM
SSD2
MDC2
SMG
LCM
LCR
LCG
LCX
STM
STG
STR2
MRL2
GRC
Cylinder switch
MN3E MN4E
4GA/B
M4GA/B
MN4GA/B
F.R (module unit)
Clean F.R
Precision R
Press gauge Diff. press gauge
Electro-pneumatic R
Speed controller
Auxiliary valve
Fitting/ tube
Clean air unit
Pressure sensor
Flow rate sensor
Valve for air blow
Ending

Dimensions CAD

3GA3110R-P7* * For the NPT thread and G thread specifications, refer to pages 464 to 471.

● 2 position single normally open grommet lead wire (blank)

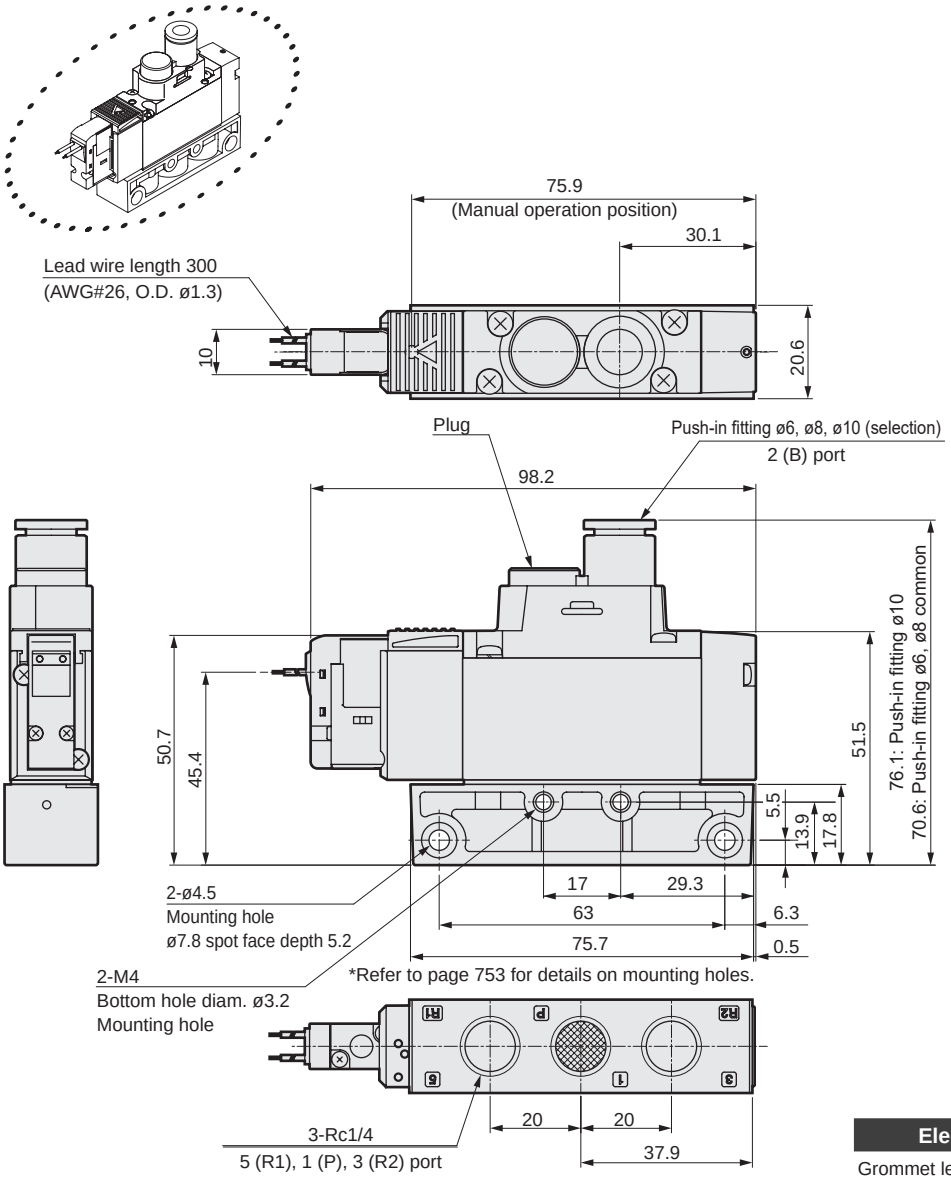

● Mounting plate (P)

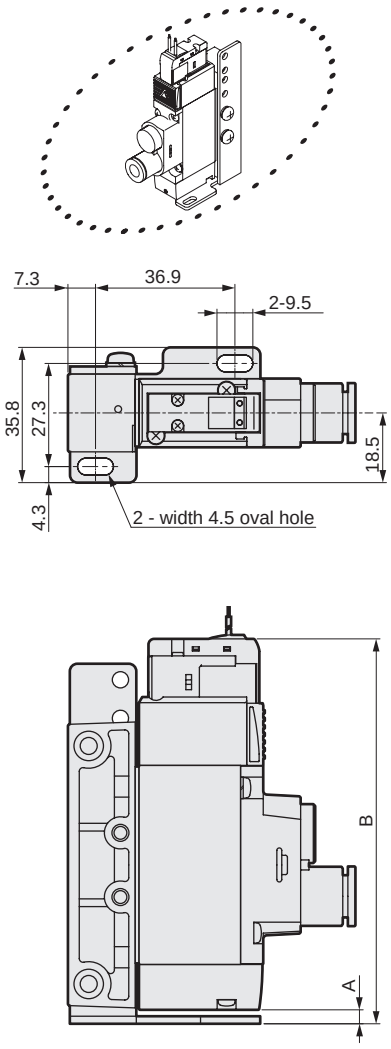

Electrical connections	A	B
Grommet lead wire	3.7	101.8
E, EJ connector (facing up), DC voltage		110
E, EJ connector (facing up), AC voltage		113.5
DIN terminal box (inner direction)		120.9

● RC1/4 female thread (08)

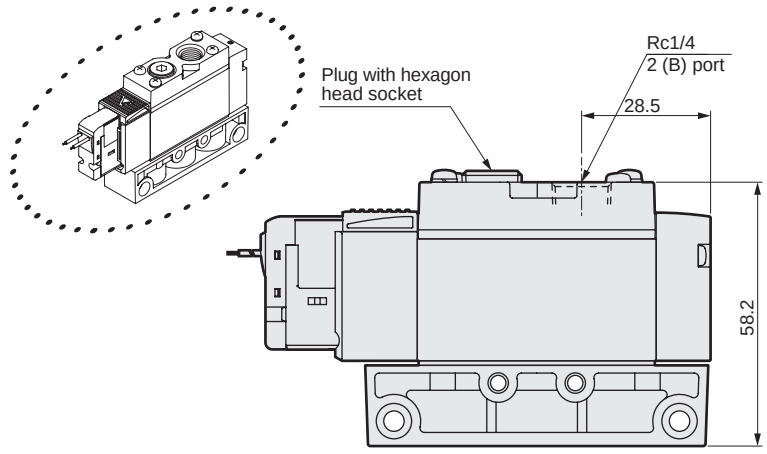

Dimensions

● E connector (E)

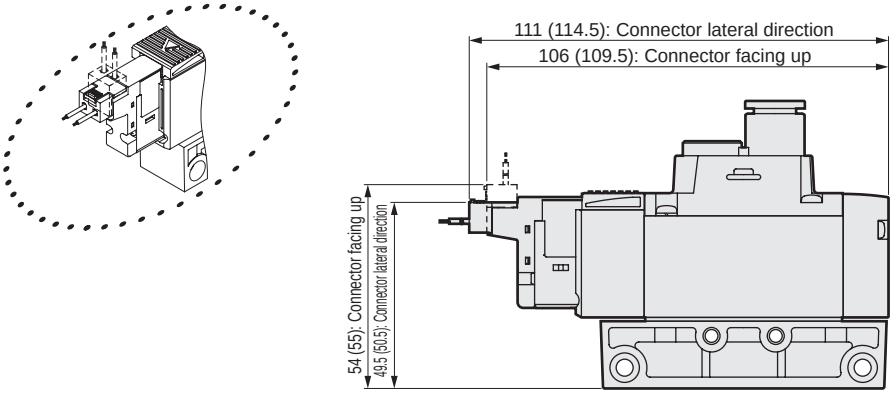

Note: Values in ( ) are applicable to AC voltages.

● EJ connector (E**J)

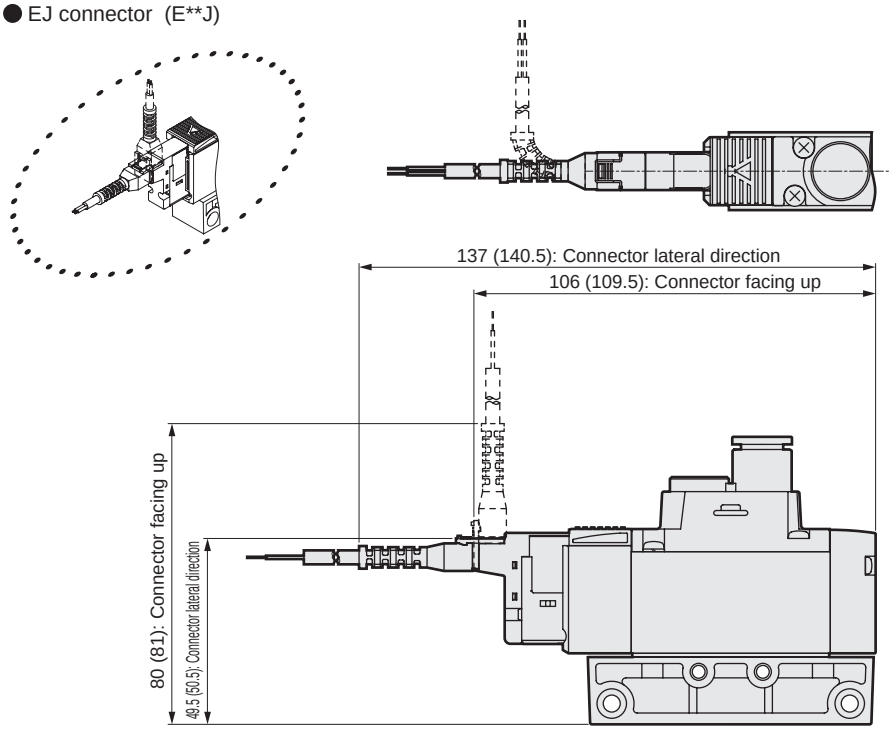

Note: Values in ( ) are applicable to AC voltages.

● DIN terminal box (B)

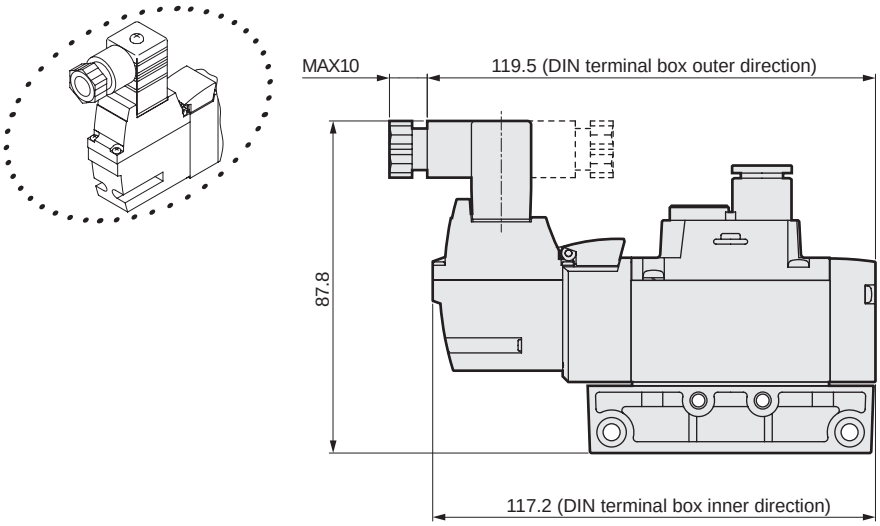

Note: The DIN terminal box assembly is shipped facing inward.

SCPD3
SCM
SSD2
MDC2
SMG
LCM
LCR
LCG
LCX
STM
STG
STR2
MRL2
GRC
Cylinder switch
MN3E MN4E
4GA/B
M4GA/B
MN4GA/B
F.R (module unit)
Clean F.R
Precision R
Press gauge Diff. press gauge
Electro-pneumatic R
Speed controller
Auxiliary valve
Fitting/ tube
Clean air unit
Pressure sensor
Flow rate sensor
Valve for air blow
Ending

Dimensions CAD

4GA110R-P7* * For the NPT thread and G thread specifications, refer to pages 464 to 471.

● 2-position single grommet lead wire (blank)

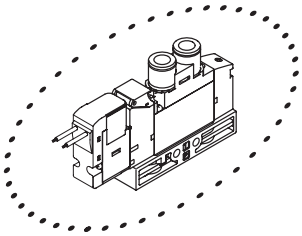

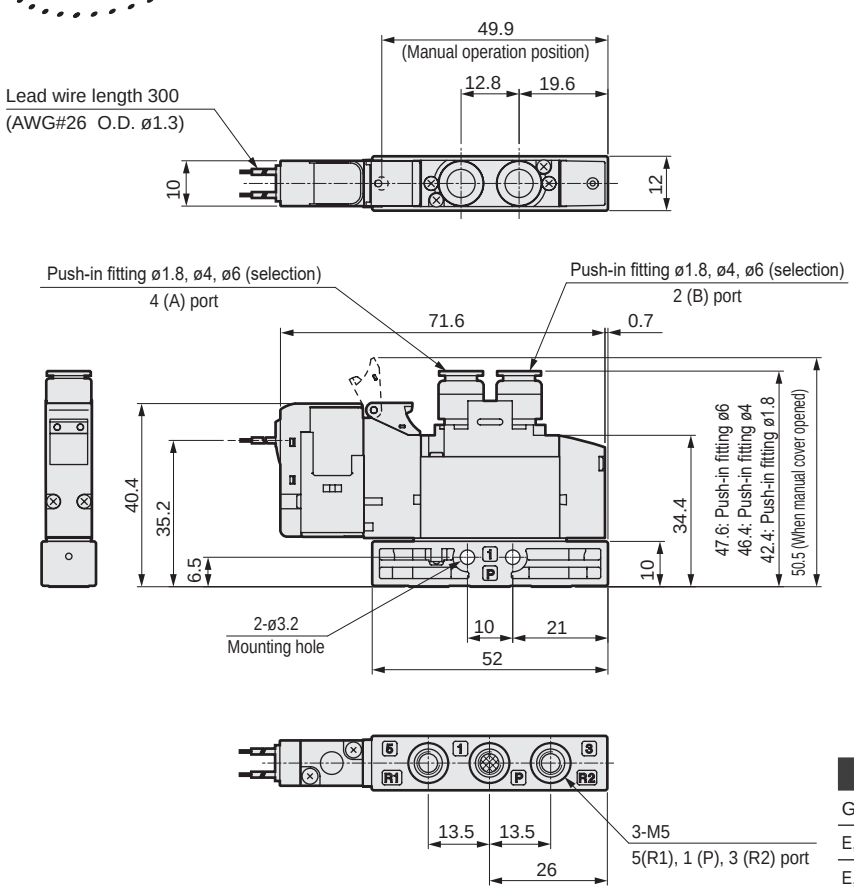

● Mounting plate (P)

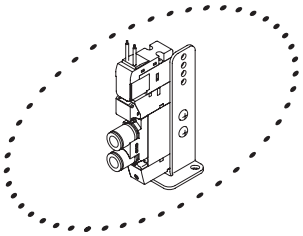

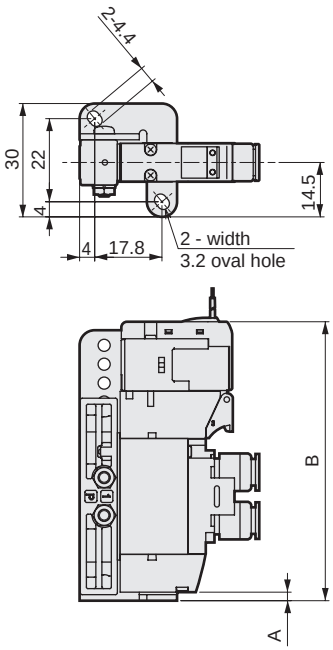

Electrical connections	A	B
Grommet lead wire	2.2	73.8
E, EJ connector (facing up), DC voltage		82
E, EJ connector (facing up), AC voltage		85.5

● M5 female thread (M5)

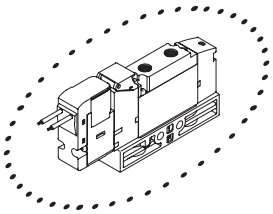

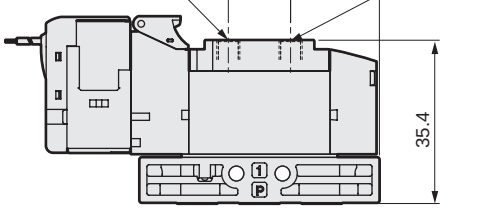

● ø1.8 barbed fitting (CF)

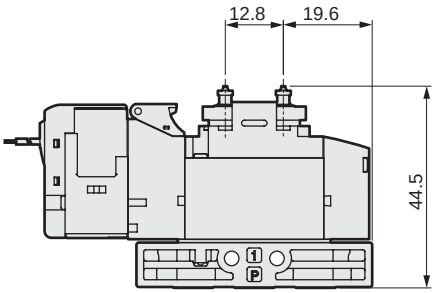

Dimensions

● E connector (E)

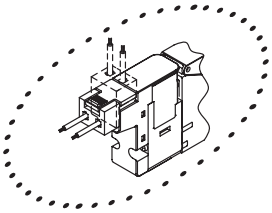

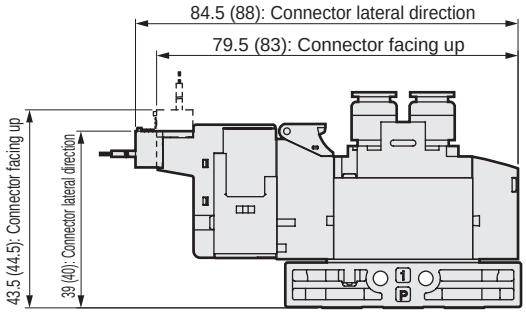

Note: Values in ( ) are applicable to AC voltages.

● EJ connector (E**J)

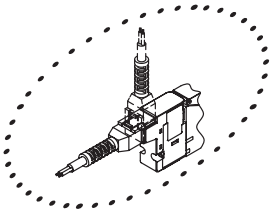

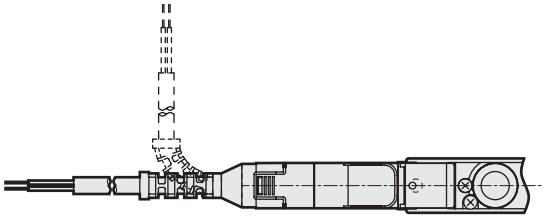

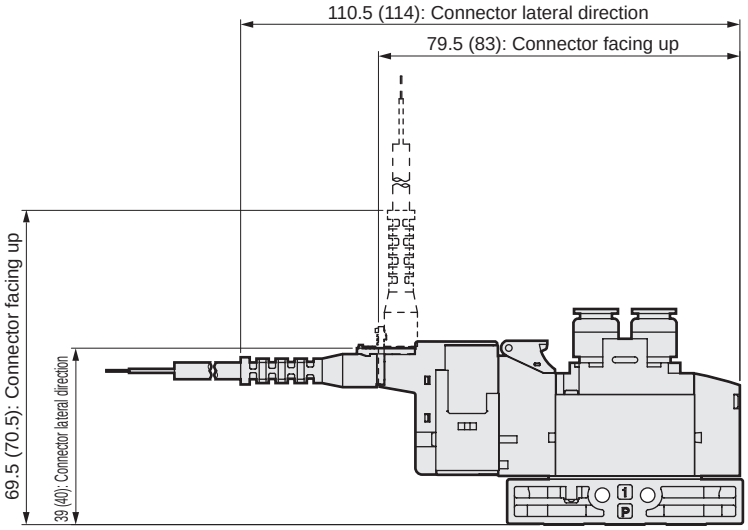

Note: Values in ( ) are applicable to AC voltages.

SCPD3
SCM
SSD2
MDC2
SMG
LCM
LCR
LCG
LCX
STM
STG
STR2
MRL2
GRC
Cylinder switch
MN3E MN4E
4GA/B
M4GA/B
MN4GA/B
F.R (module unit)
Clean F.R
Precision R
Press gauge Diff. press gauge
Electro-pneumatic R
Speed controller
Auxiliary valve
Fitting/ tube
Clean air unit
Pressure sensor
Flow rate sensor
Valve for air blow
Ending

Dimensions CAD

4GA120R-P7* * For the NPT thread and G thread specifications, refer to pages 464 to 471.

● 2-position double grommet lead wire (blank)

3GA1660R, 3GA1670R, 3GA1760R, 3GA1770R-P7*

● Dual 3-port valve integrated grommet lead wire (blank)

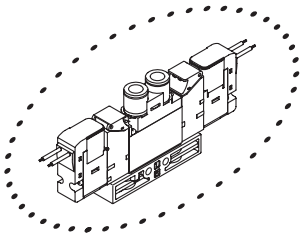

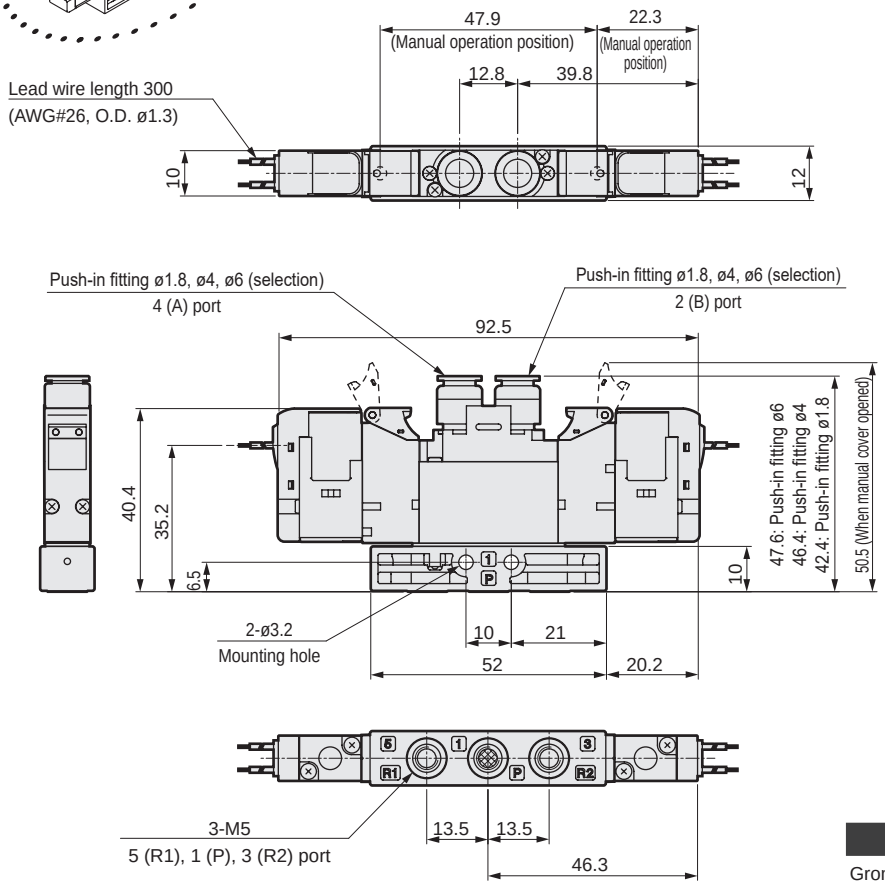

● Mounting plate (P)

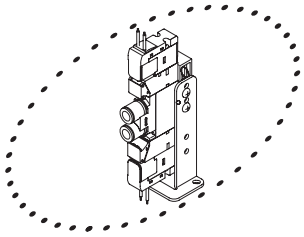

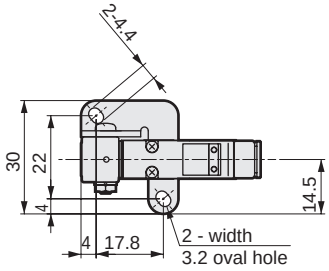

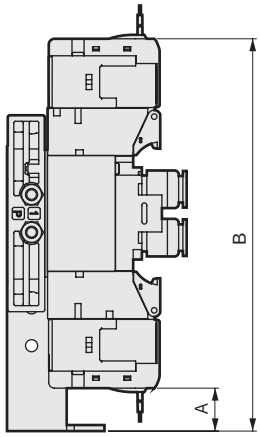

Electrical connections	A	B
Grommet lead wire	11.3	103.8
E, EJ connector (facing up), DC voltage	3	112
E, EJ connector (facing up), AC voltage	5	124

● M5 female thread (M5)

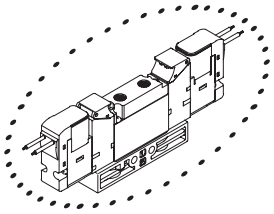

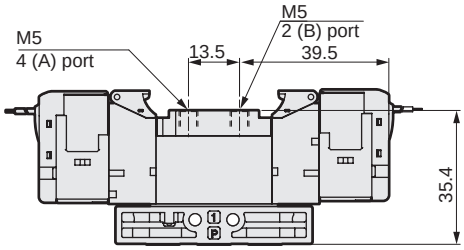

● ø1.8 barbed fitting (CF)

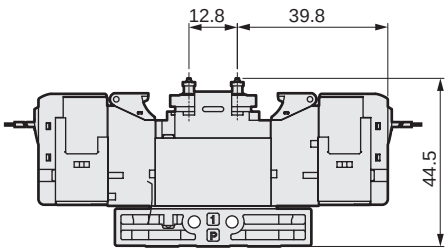

Dimensions

● E connector (E)

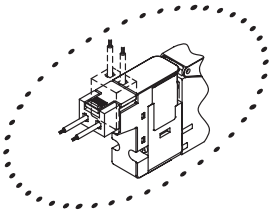

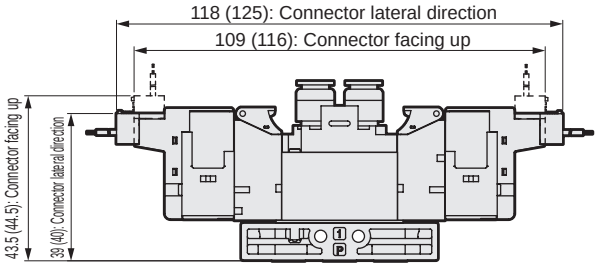

Note: Values in ( ) are applicable to AC voltages.

● EJ connector (E**J)

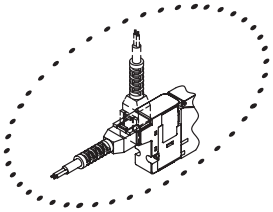

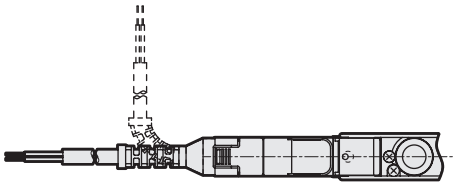

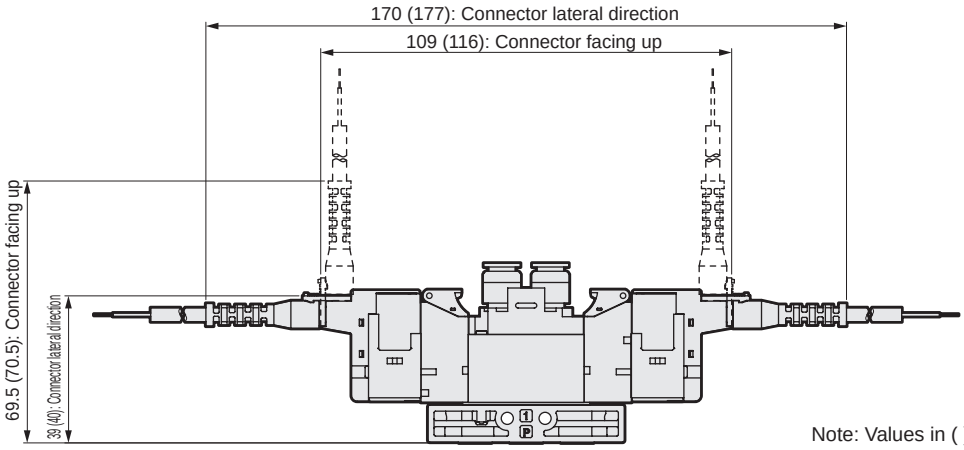

Note: Values in ( ) are applicable to AC voltages.

SCPD3
SCM
SSD2
MDC2
SMG
LCM
LCR
LCG
LCX
STM
STG
STR2
MRL2
GRC
Cylinder switch
MN3E MN4E
4GA/B
M4GA/B
MN4GA/B
F.R (module unit)
Clean F.R
Precision R
Press gauge Diff. press gauge
Electro-pneumatic R
Speed controller
Auxiliary valve
Fitting/ tube
Clean air unit
Pressure sensor
Flow rate sensor
Valve for air blow
Ending

Dimensions CAD

4GA1$^{3}_{4}_{5}$0R-P7* * For the NPT thread and G thread specifications, refer to pages 464 to 471.

● 3 position grommet lead wire (blank)

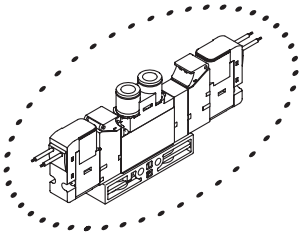

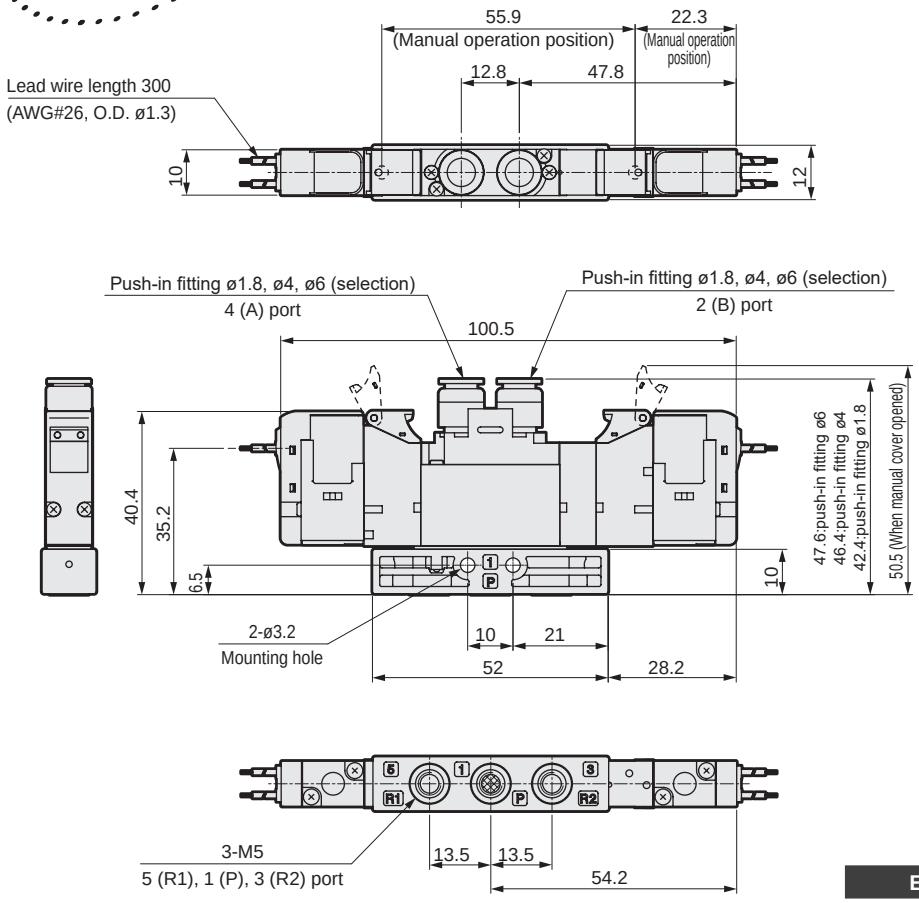

● Mounting plate (P)

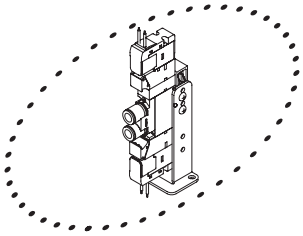

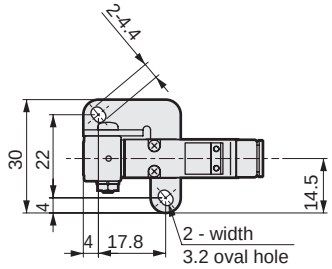

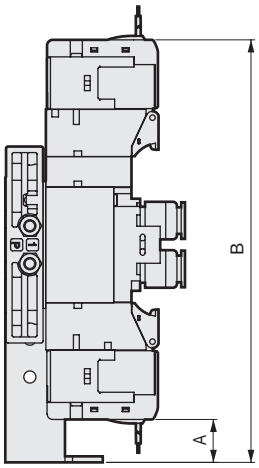

Electrical connections	A	B
Grommet lead wire	11.3	111.8
E, EJ connector (facing up), DC voltage	3	120
E, EJ connector (facing up), AC voltage	5	132

● M5 female thread (M5)

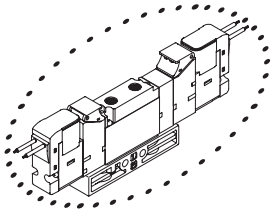

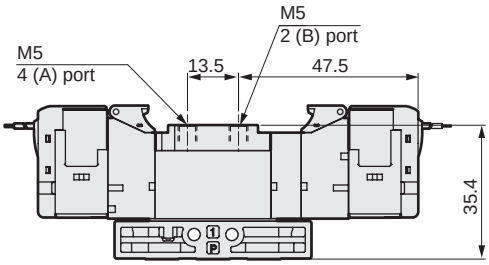

● ø1.8 barbed fitting (CF)

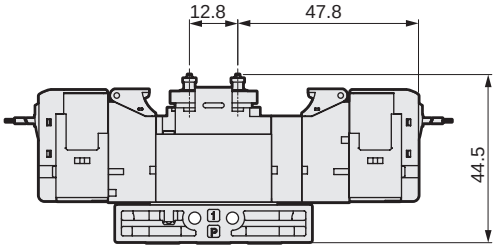

Dimensions

● E connector (E)

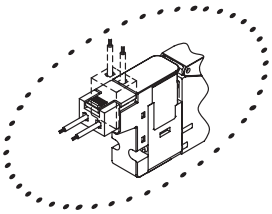

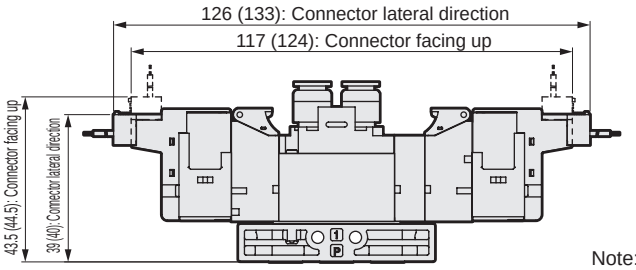

Note: Values in ( ) are applicable to AC voltages.

● EJ connector (E**J)

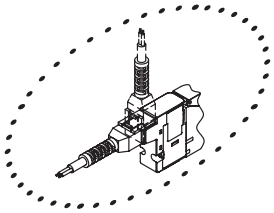

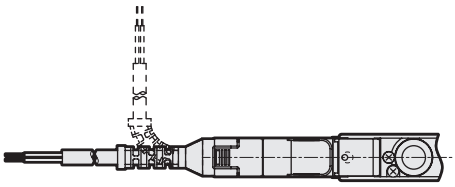

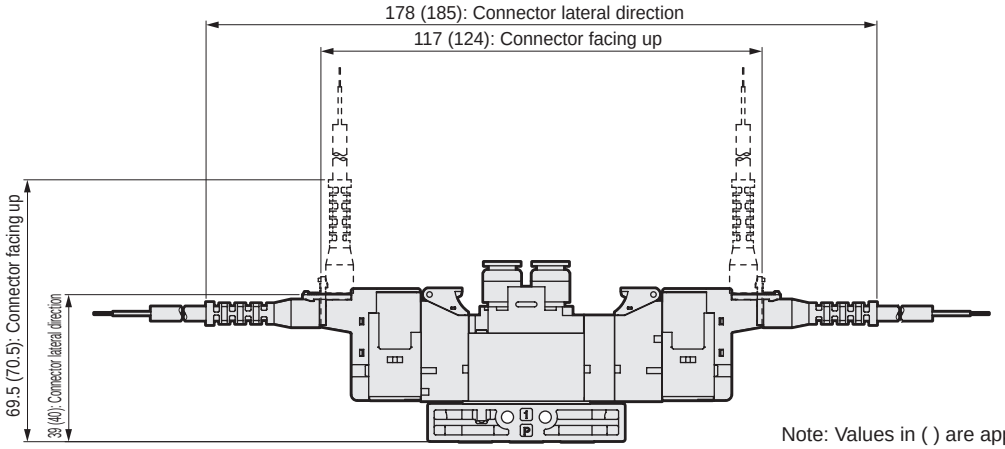

Note: Values in ( ) are applicable to AC voltages.

SCPD3
SCM
SSD2
MDC2
SMG
LCM
LCR
LCG
LCX
STM
STG
STR2
MRL2
GRC
Cylinder switch
MN3E MN4E
4GA/B
M4GA/B
MN4GA/B
F.R (module unit)
Clean F.R
Precision R
Press gauge Diff. press gauge
Electro-pneumatic R
Speed controller
Auxiliary valve
Fitting/ tube
Clean air unit
Pressure sensor
Flow rate sensor
Valve for air blow
Ending

Dimensions CAD

4GA210R-P7* * For the NPT thread and G thread specifications, refer to pages 464 to 471.

● 2-position single grommet lead wire (blank)

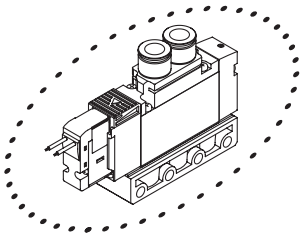

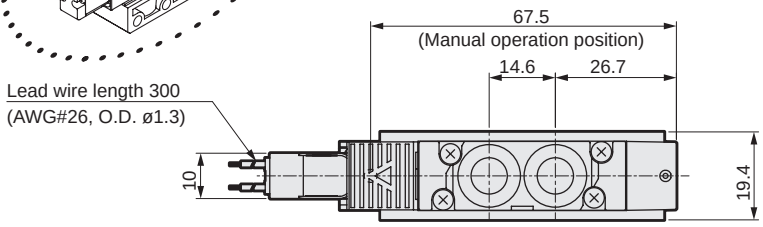

● Mounting plate (P)

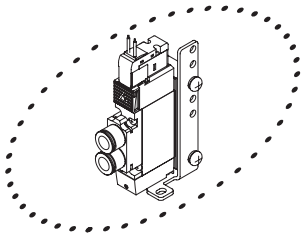

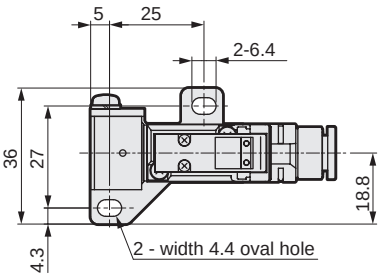

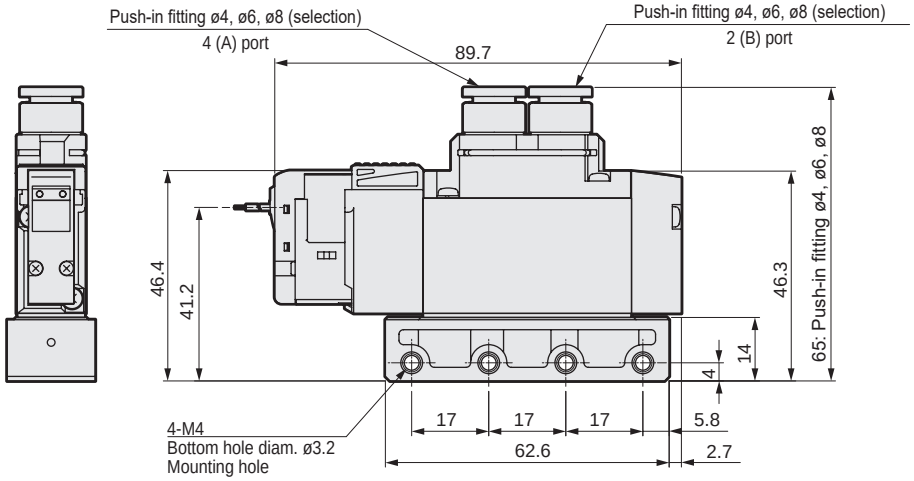

*Refer to page 753 for details on mounting holes.

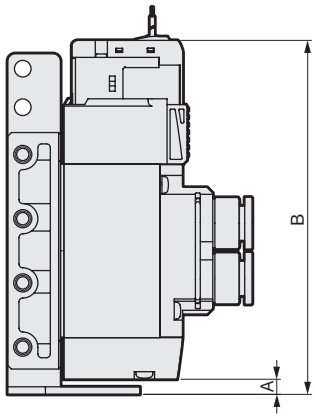

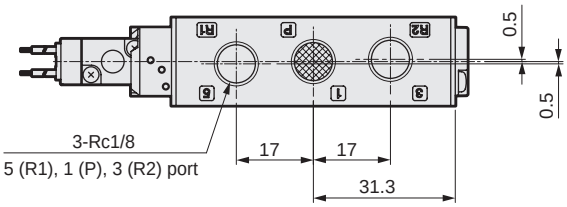

Electrical connections	A	B
Grommet lead wire	4	93.7
E, EJ connector (facing up), DC voltage		102
E, EJ connector (facing up), AC voltage		105.5
DIN terminal box (inner direction)		112.7

● Rc1/8 female thread (06)

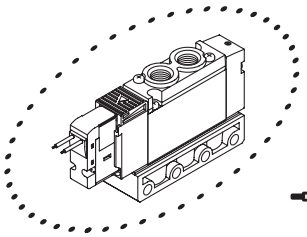

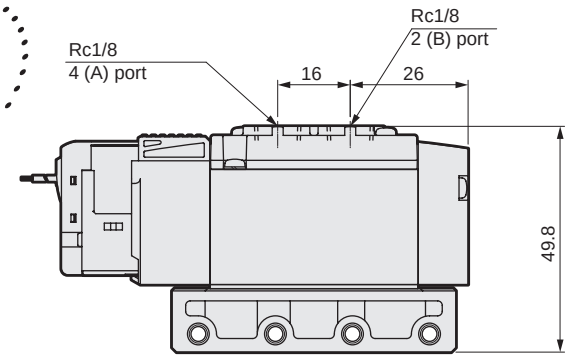

Dimensions

● E connector (E)

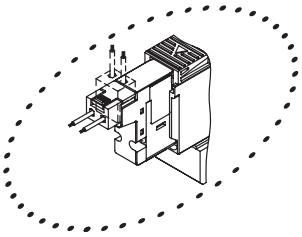

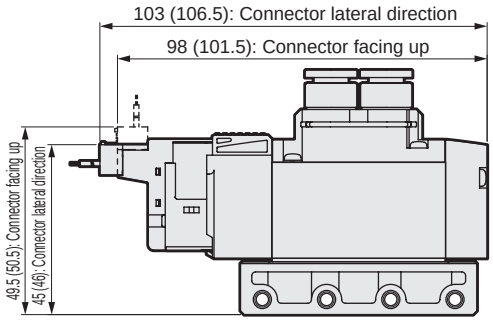

Note: Values in ( ) are applicable to AC voltages.

● EJ connector (E**J)

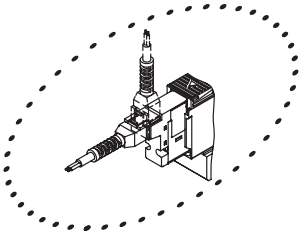

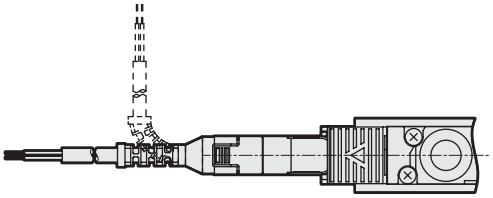

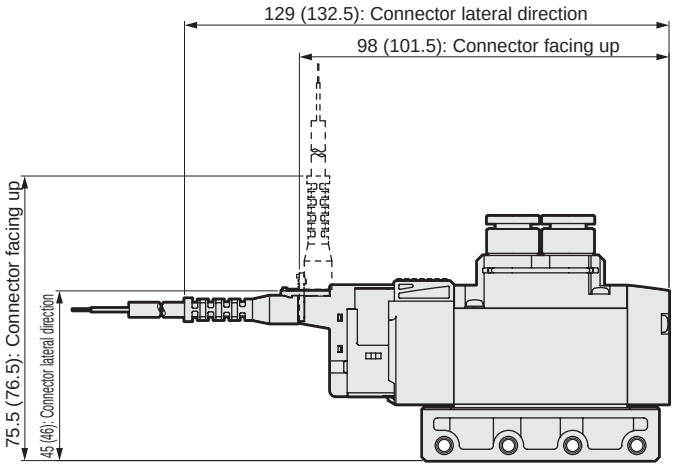

Note: Values in ( ) are applicable to AC voltages.

● DIN terminal box (B)

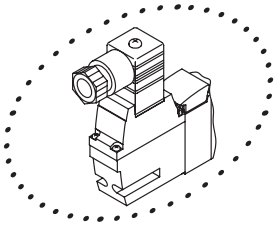

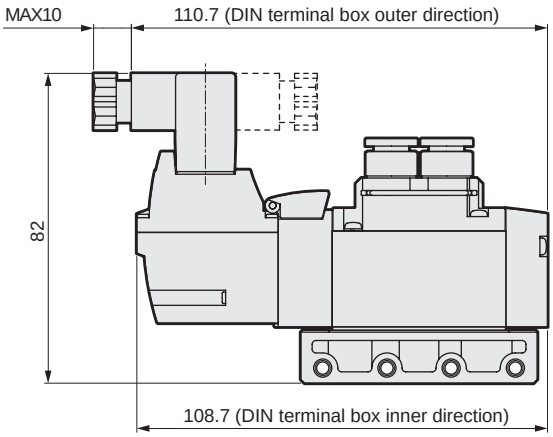

Note: The DIN terminal box assembly is shipped facing inward.

SCPD3
SCM
SSD2
MDC2
SMG
LCM
LCR
LCG
LCX
STM
STG
STR2
MRL2
GRC
Cylinder switch
MN3E MN4E
4GA/B
M4GA/B
MN4GA/B
F.R (module unit)
Clean F.R
Precision R
Press gauge Diff. press gauge
Electro-pneumatic R
Speed controller
Auxiliary valve
Fitting/ tube
Clean air unit
Pressure sensor
Flow rate sensor
Valve for air blow
Ending

Dimensions CAD

4GA220R-P7* * For the NPT thread and G thread specifications, refer to pages 464 to 471.

● 2-position double grommet lead wire (blank)

3GA2660R, 3GA2670R, 3GA2760R, 3GA2770R-P7*

● Dual 3-port valve integrated grommet lead wire (blank)

● Mounting plate (P)

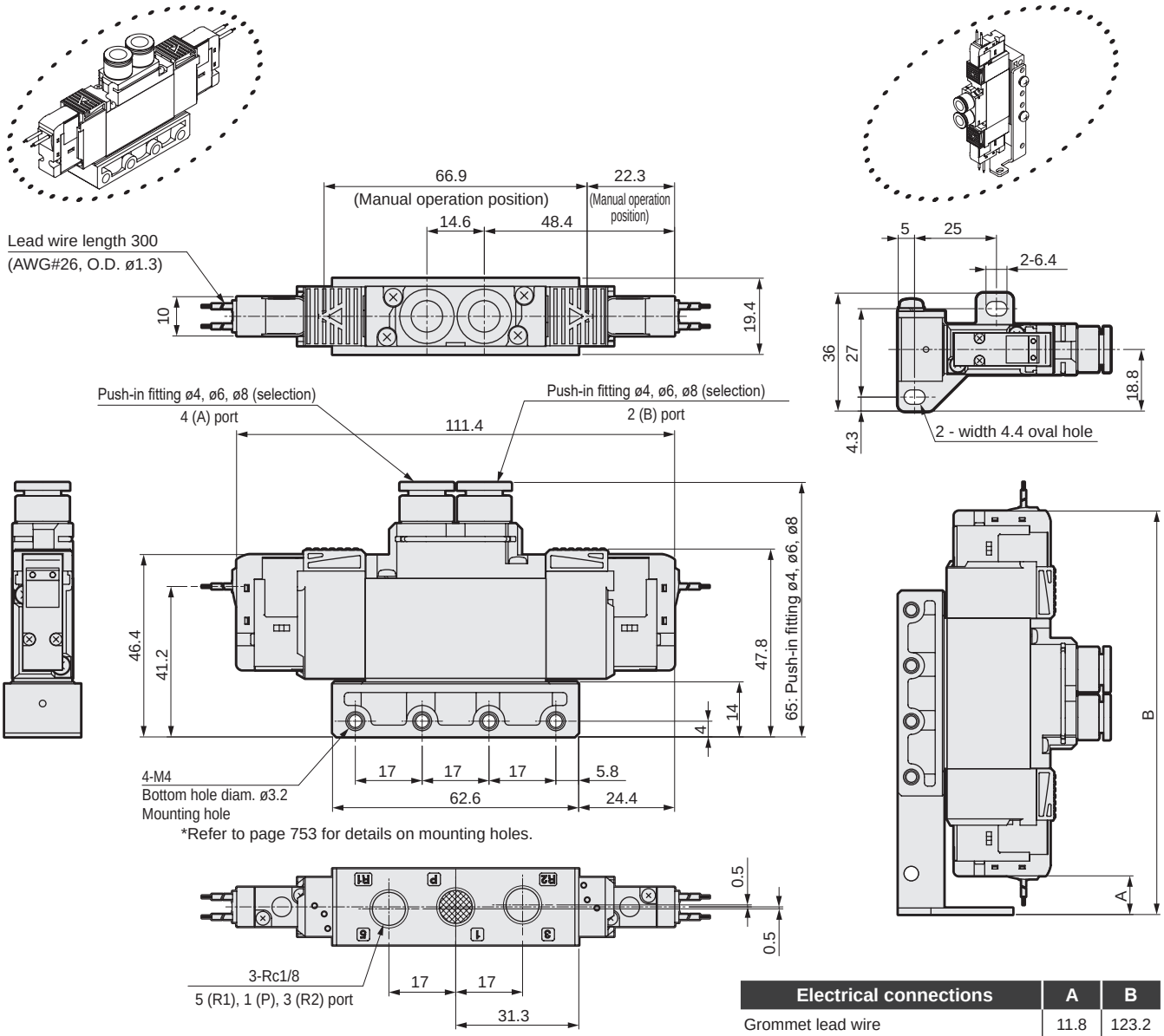

Electrical connections	A	B
Grommet lead wire	11.8	123.2
E, EJ connector (facing up), DC voltage	3.5	131.5
E, EJ connector (facing up), AC voltage	10.5	148.5
DIN terminal box (inner direction)	3	152.4

● Rc1/8 female thread (06)

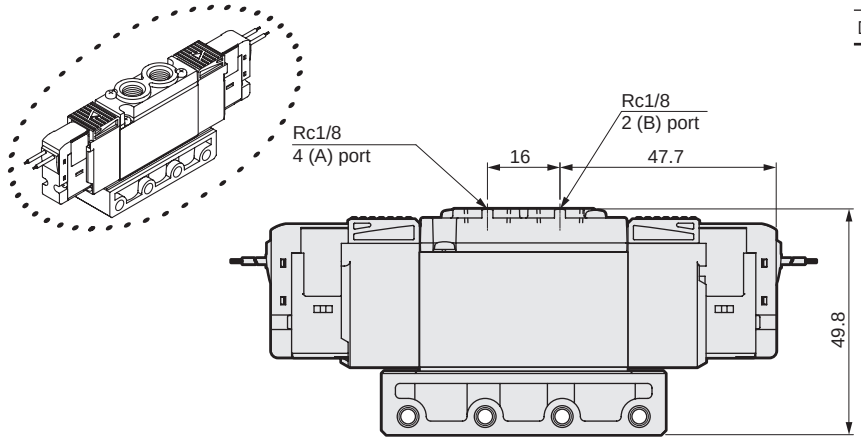

Dimensions

● E connector (E)

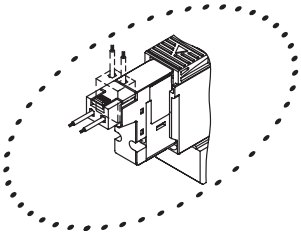

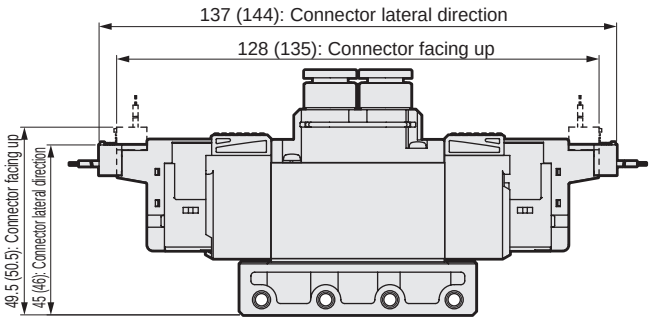

Note: Values in ( ) are applicable to AC voltages.

● EJ connector (E**J)

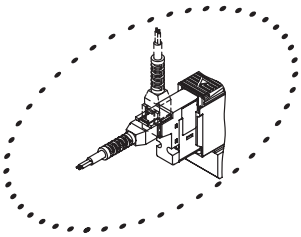

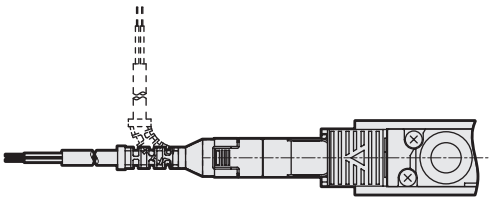

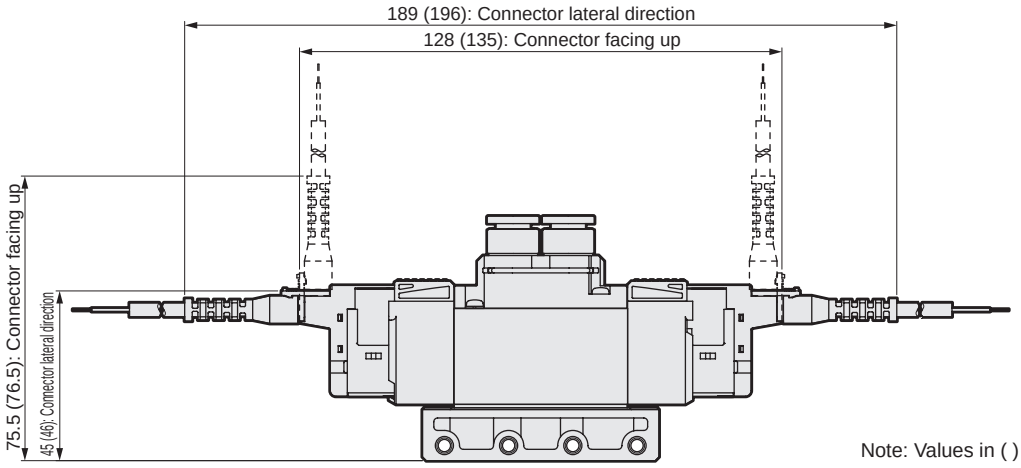

Note: Values in ( ) are applicable to AC voltages.

● DIN terminal box (B)

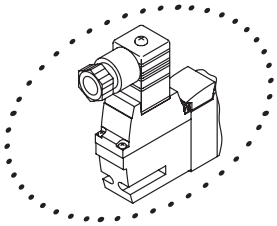

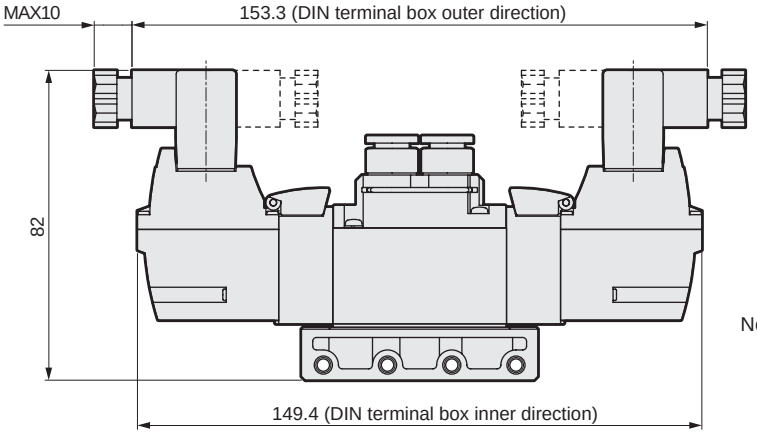

Note: The DIN terminal box assembly is shipped facing inward.

Dimensions CAD

4GA2$^{3}_{4}_{5}$0R-P7* * For the NPT thread and G thread specifications, refer to pages 464 to 471.

● 3 position grommet lead wire (blank)

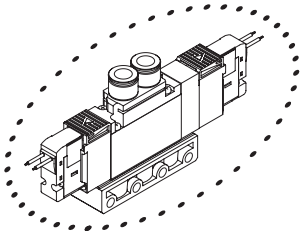

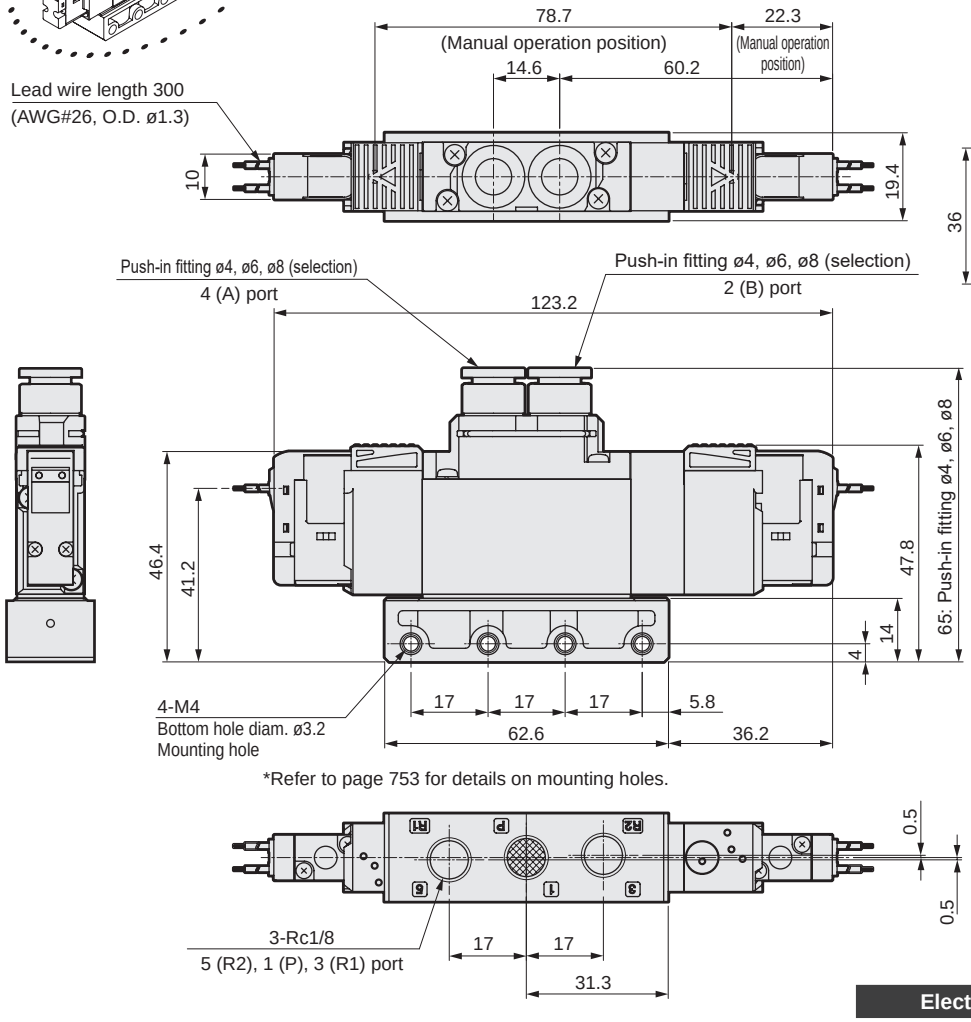

● Mounting plate (P)

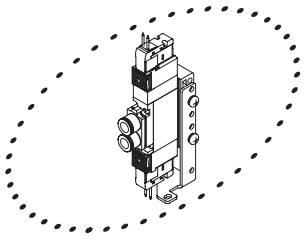

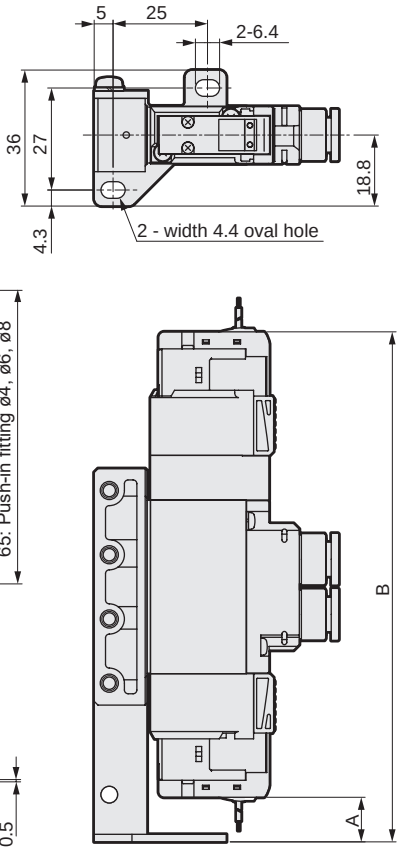

Electrical connections	A	B
Grommet lead wire	11.8	135
E, EJ connector (facing up), DC voltage	3.5	143
E, EJ connector (facing up), AC voltage	10.5	160.5
DIN terminal box (inner direction)	3	164.2

● Rc1/8 female thread (06)

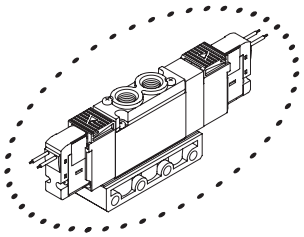

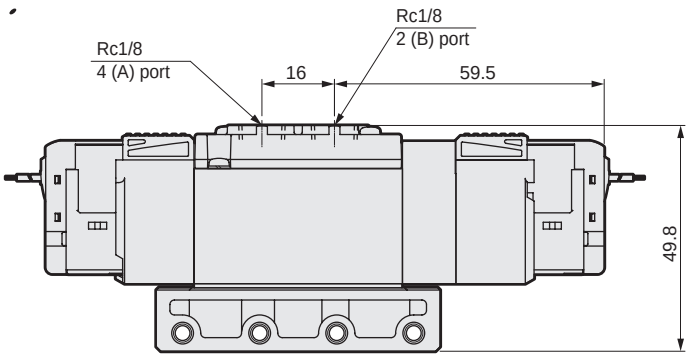

Dimensions

● E connector (E)

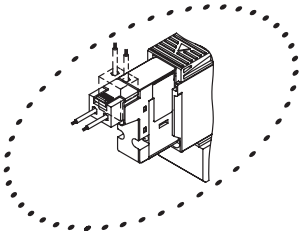

Note: Values in ( ) are applicable to AC voltages.

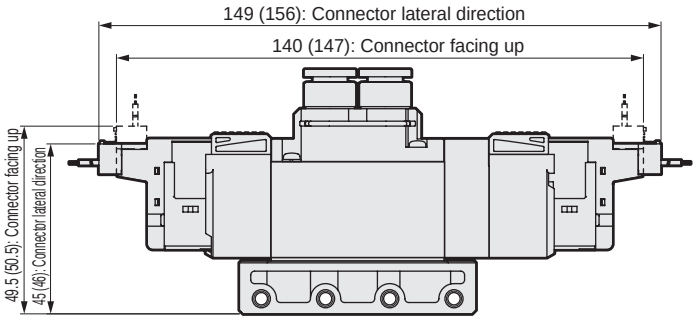

● EJ connector (E**J)

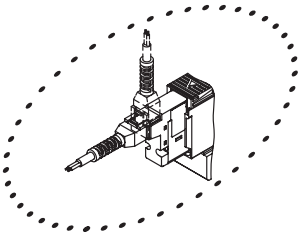

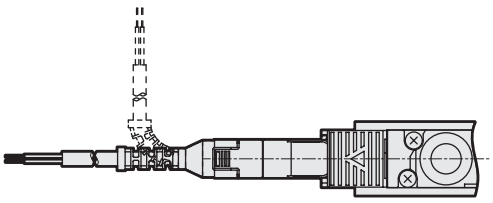

Note: Values in ( ) are applicable to AC voltages.

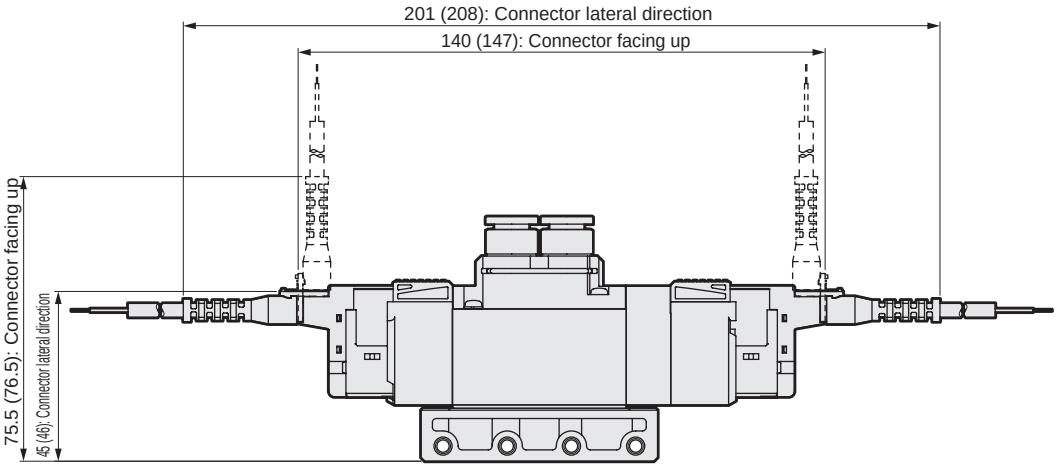

● DIN terminal box (B)

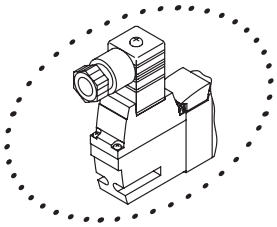

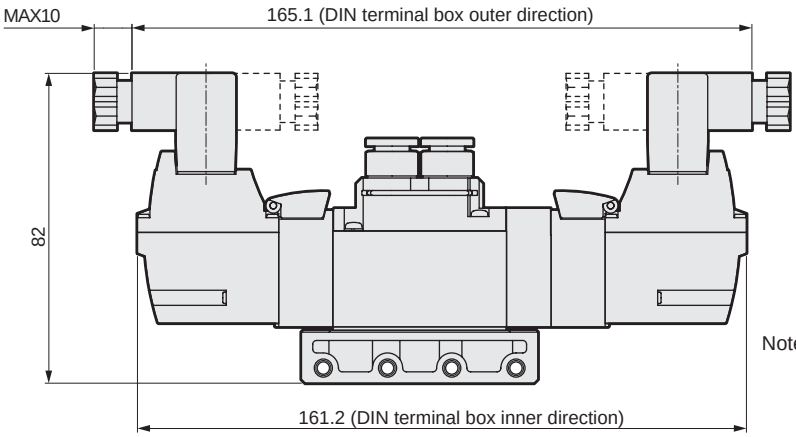

Note: The DIN terminal box assembly is shipped facing inward.

SCPD3
SCM
SSD2
MDC2
SMG
LCM
LCR
LCG
LCX
STM
STG
STR2
MRL2
GRC
Cylinder switch
MN3E MN4E
4GA/B
M4GA/B
MN4GA/B
F.R (module unit)
Clean F.R
Precision R
Press gauge Diff. press gauge
Electro-pneumatic R
Speed controller
Auxiliary valve
Fitting/ tube
Clean air unit
Pressure sensor
Flow rate sensor
Valve for air blow
Ending

Dimensions CAD

4GA310R-P7* * For the NPT thread and G thread specifications, refer to pages 464 to 471.

● 2-position single grommet lead wire (blank)

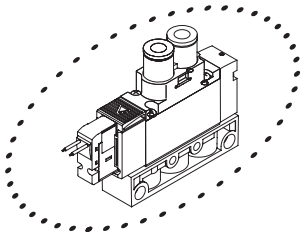

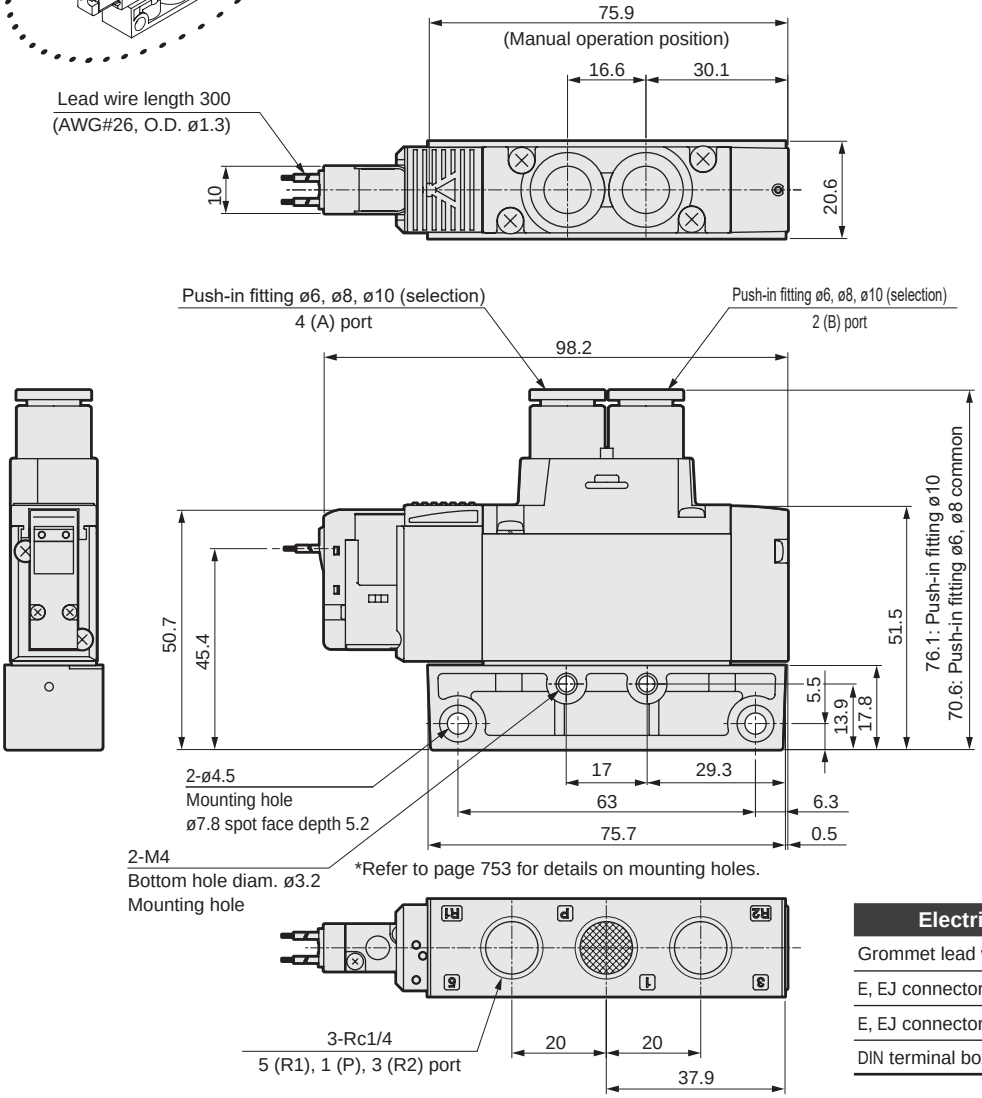

● Mounting plate (P)

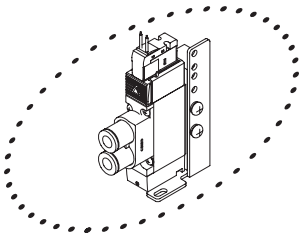

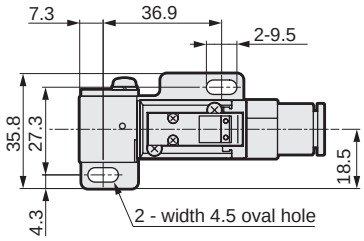

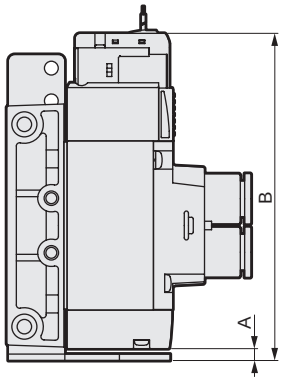

Electrical connections	A	B
Grommet lead wire	3.7	101.8
E, EJ connector (facing up), DC voltage		110
E, EJ connector (facing up), AC voltage		113.5
DIN terminal box (inner direction)		120.9

● Rc1/4 female thread (08)

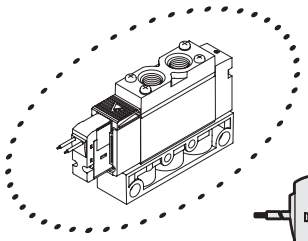

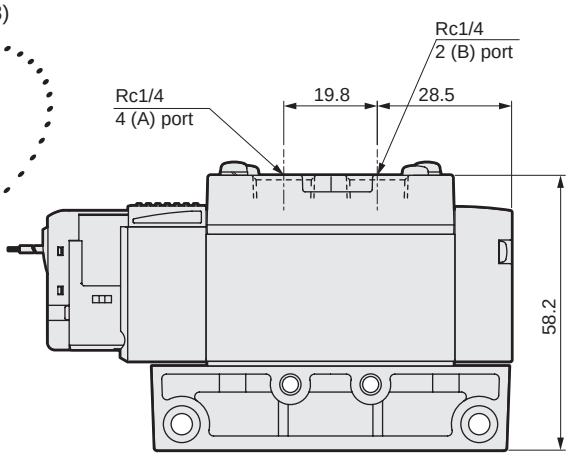

Dimensions

● E connector (E)

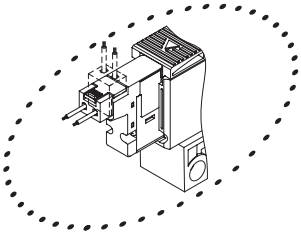

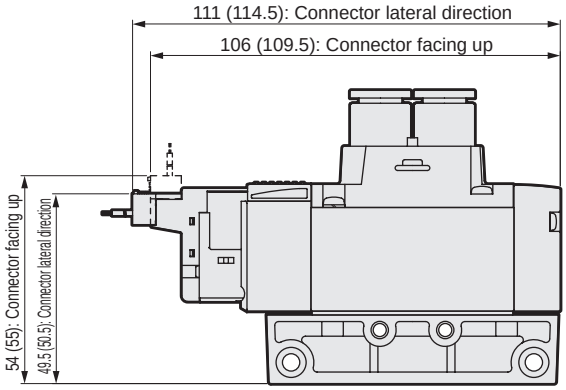

Note: Values in ( ) are applicable to AC voltages.

● EJ connector (E**J)

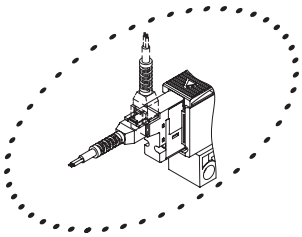

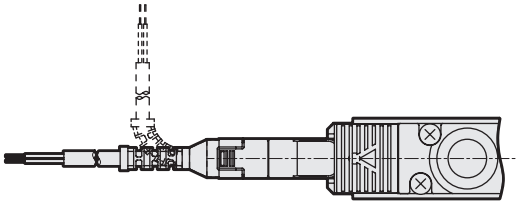

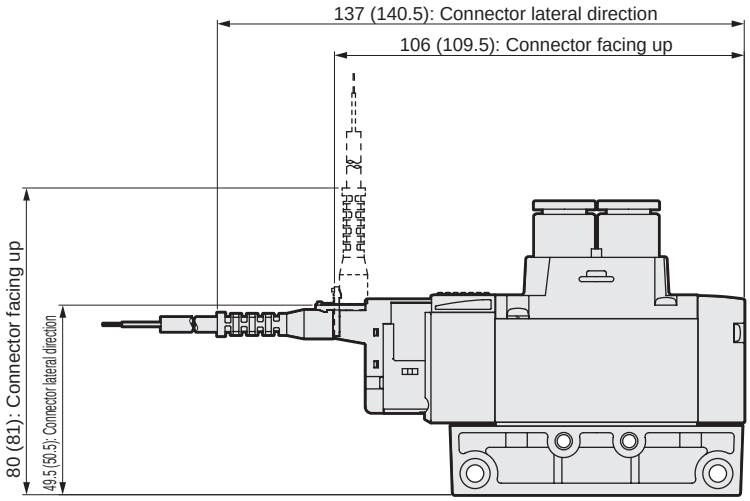

Note: Values in ( ) are applicable to AC voltages.

● DIN terminal box (B)

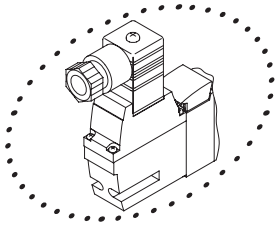

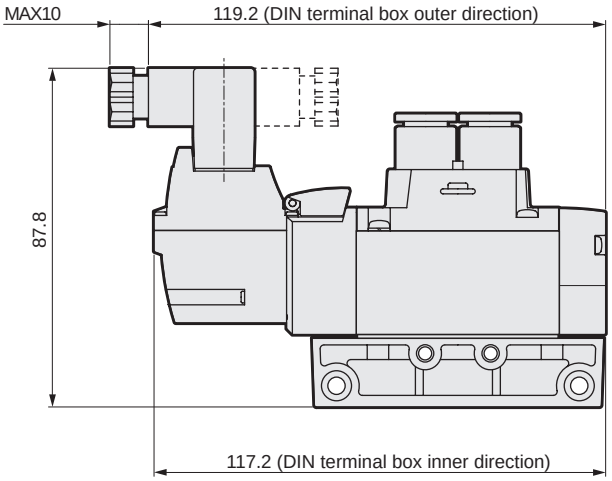

Note: The DIN terminal box assembly is shipped facing inward.

SCPD3
SCM
SSD2
MDC2
SMG
LCM
LCR
LCG
LCX
STM
STG
STR2
MRL2
GRC
Cylinder switch
MN3E MN4E
4GA/B
M4GA/B
MN4GA/B
F.R (module unit)
Clean F.R
Precision R
Press gauge Diff. press gauge
Electro-pneumatic R
Speed controller
Auxiliary valve
Fitting/ tube
Clean air unit
Pressure sensor
Flow rate sensor
Valve for air blow
Ending

Dimensions CAD

4GA320R-P7* * For the NPT thread and G thread specifications, refer to pages 464 to 471.

● 2-position double grommet lead wire (blank)

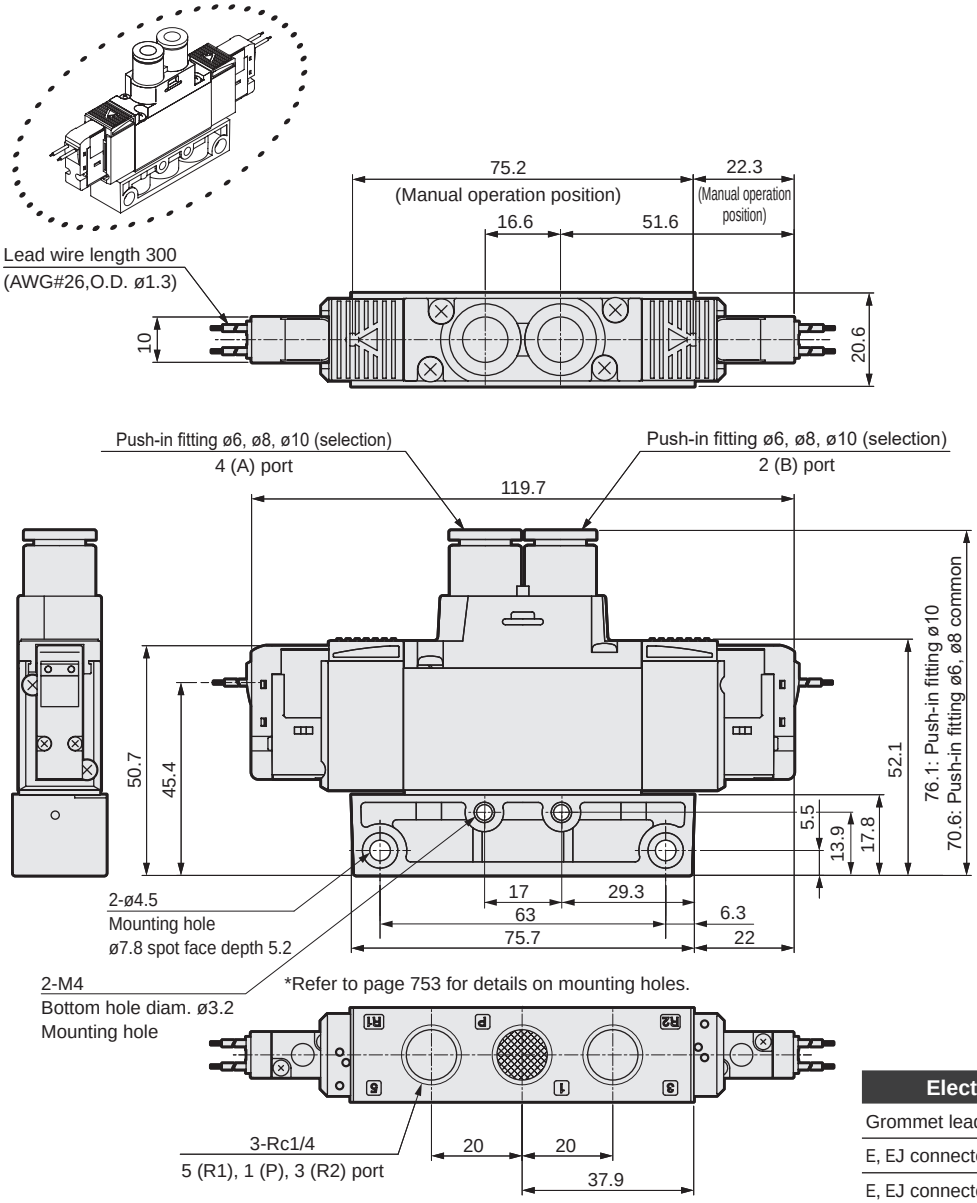

● Mounting plate (P)

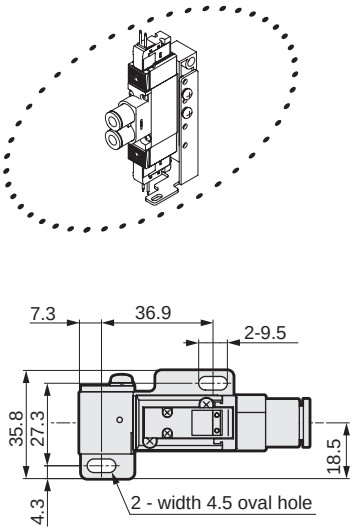

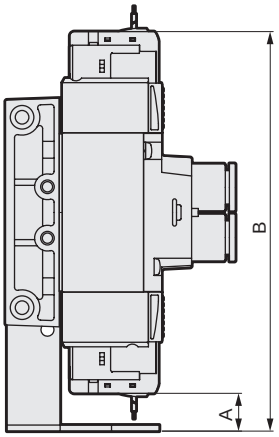

Electrical connections	A	B
Grommet lead wire	12.6	132.2
E, EJ connector (facing up), DC voltage	4.5	140.5
E, EJ connector (facing up), AC voltage	11	157.5
DIN terminal box (inner direction)	3.7	161.4

● Rc1/4 female thread (08)

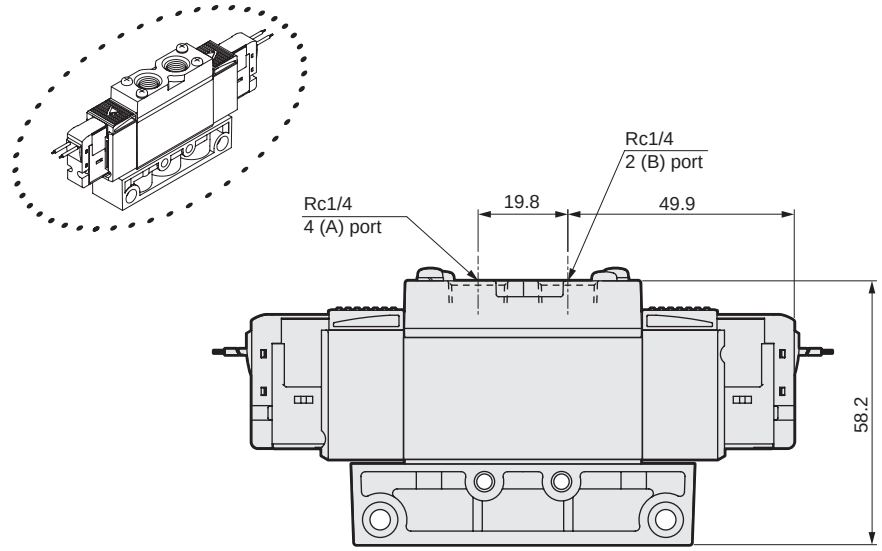

Dimensions

● E connector (E)

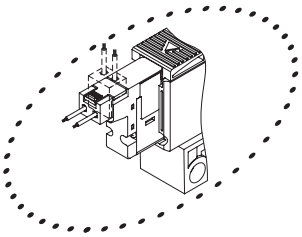

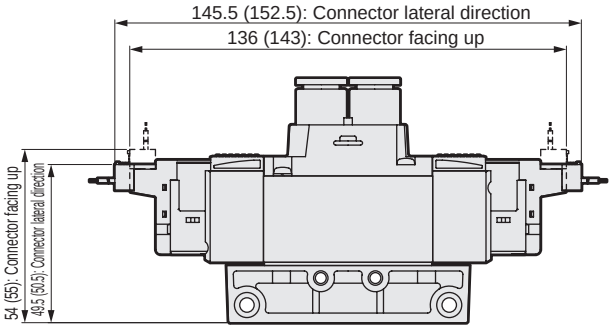

Note: Values in ( ) are applicable to AC voltages.

● EJ connector (E**J)

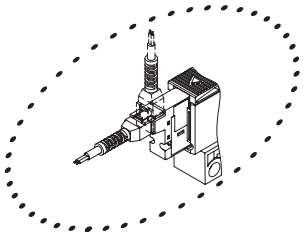

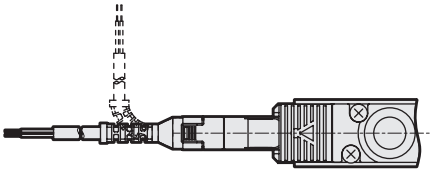

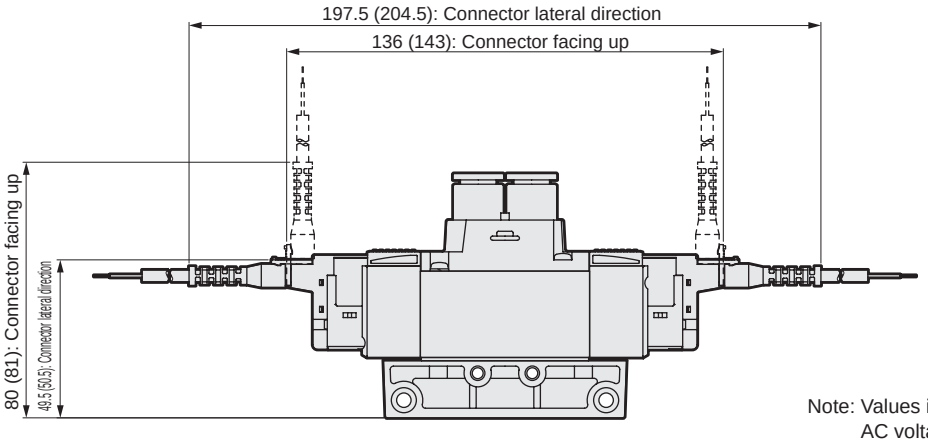

Note: Values in ( ) are applicable to AC voltages.

● DIN terminal box (B)

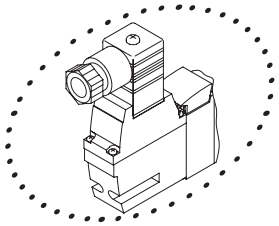

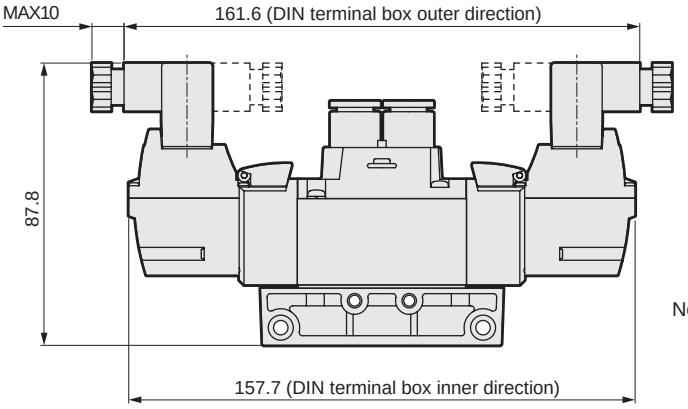

Note: The DIN terminal box assembly is shipped facing inward.

SCPD3
SCM
SSD2
MDC2
SMG
LCM
LCR
LCG
LCX
STM
STG
STR2
MRL2
GRC
Cylinder switch
MN3E MN4E
4GA/B
M4GA/B
MN4GA/B
F.R (module unit)
Clean F.R
Precision R
Press gauge Diff. press gauge
Electro-pneumatic R
Speed controller
Auxiliary valve
Fitting/ tube
Clean air unit
Pressure sensor
Flow rate sensor
Valve for air blow
Ending

Dimensions CAD

4GA3$^{3}_{4}_{5}$0R-P7* * For the NPT thread and G thread specifications, refer to pages 464 to 471.

● 3 position grommet lead wire (blank)

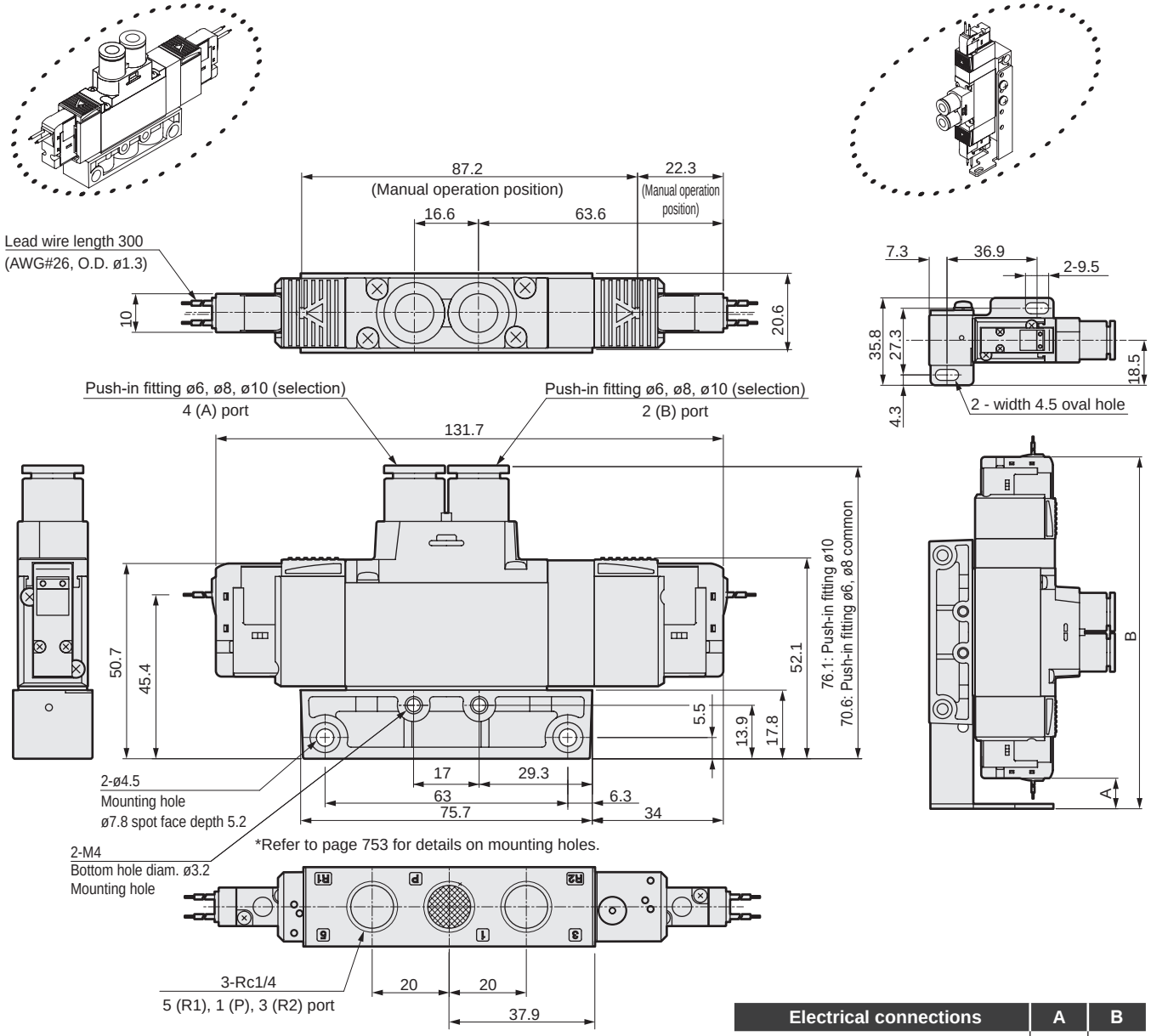

● Mounting plate (P)

Electrical connections	A	B
Grommet lead wire	12.6	144.3
E, EJ connector (facing up), DC voltage	4.5	152.5
E, EJ connector (facing up), AC voltage	11	169.5
DIN terminal box (inner direction)	3.7	173.4

● Rc1/4 female thread (08)

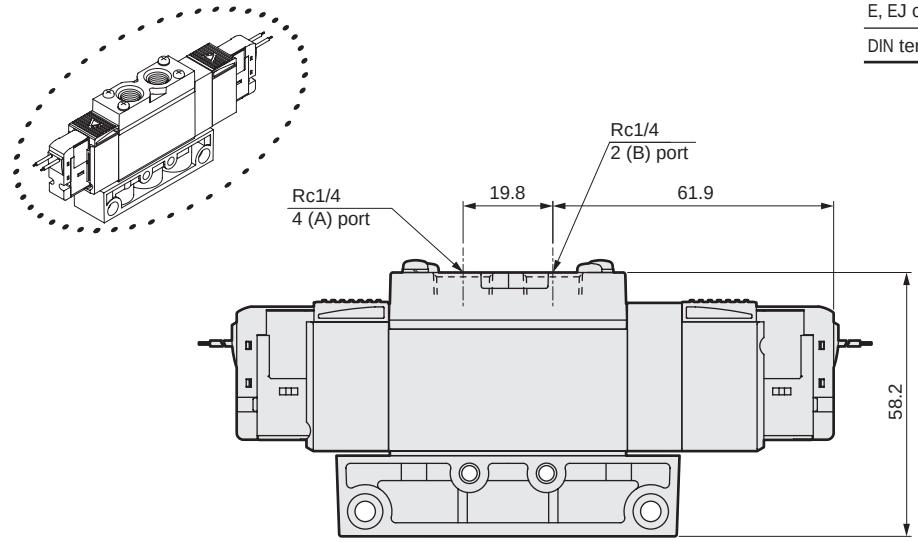

Dimensions

● E connector (E)

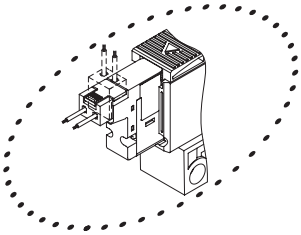

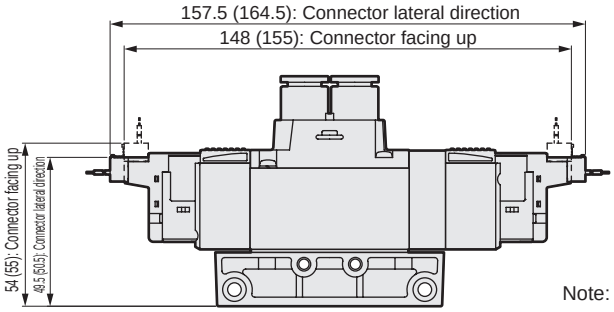

Note: Values in ( ) are applicable to AC voltages.

● EJ connector (E**J)

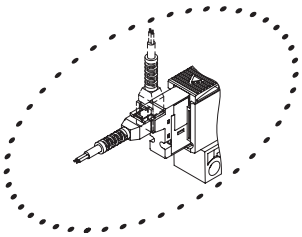

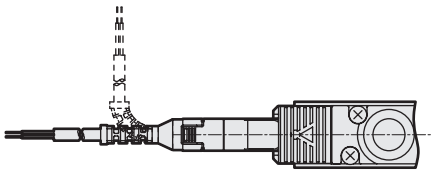

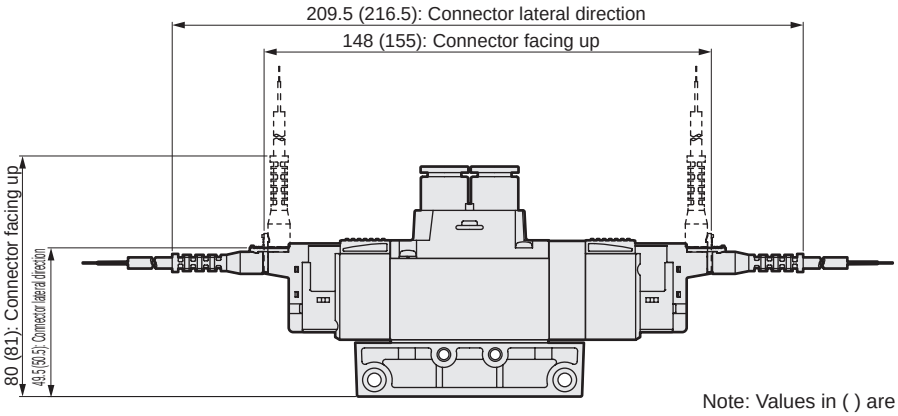

Note: Values in ( ) are applicable to AC voltages.

● DIN terminal box (B)

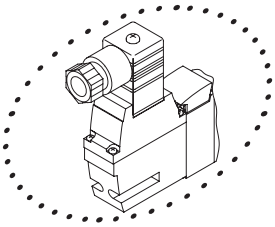

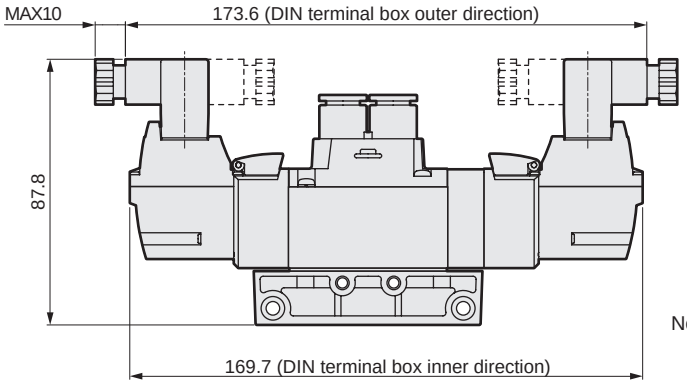

Note: The DIN terminal box assembly is shipped facing inward.

SCPD3
SCM
SSD2
MDC2
SMG
LCM
LCR
LCG
LCX
STM
STG
STR2
MRL2
GRC
Cylinder switch
MN3E MN4E
4GA/B
M4GA/B
MN4GA/B
F.R (module unit)
Clean F.R
Precision R
Press gauge Diff. press gauge
Electro-pneumatic R
Speed controller
Auxiliary valve
Fitting/ tube
Clean air unit
Pressure sensor
Flow rate sensor
Valve for air blow
Ending

Dimensions Port size; NPT thread

3GA1 1/11/66/67/76/77 0R-P7*, 4GA1 1/2/3/4/5 0R-P7*

● 2-position single grommet lead wire (blank)

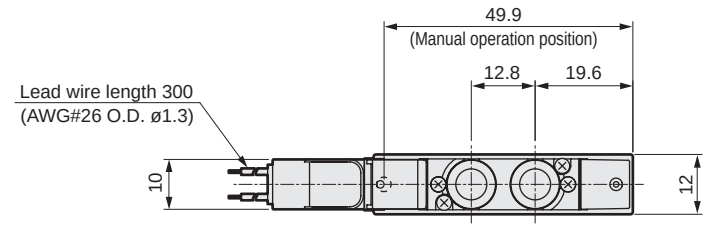

● Mounting plate (P)

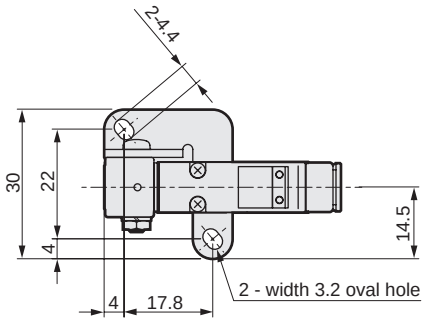

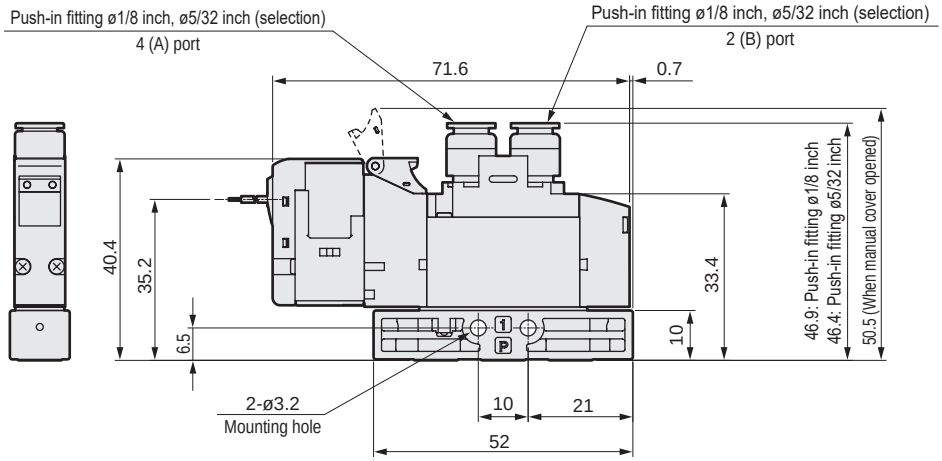

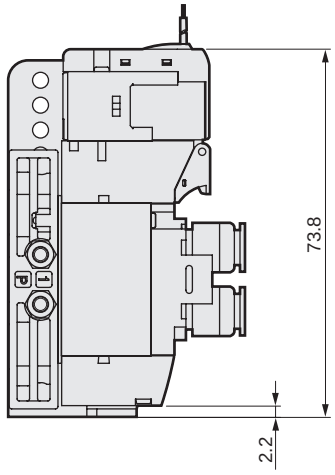

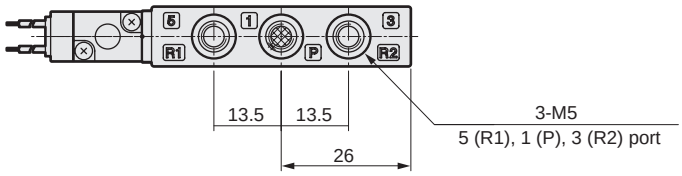

Dimensions Port size; NPT thread

● E connector (E)

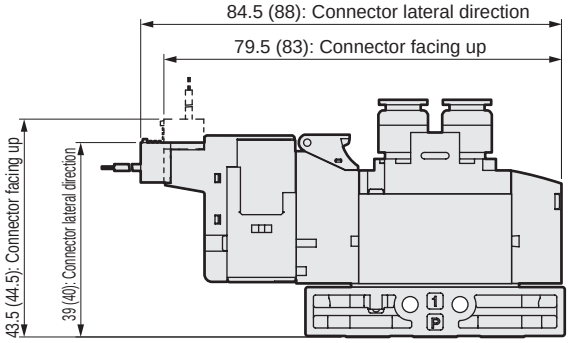

Note: Values in ( ) are applicable to AC voltages.

● EJ connector (E**J)

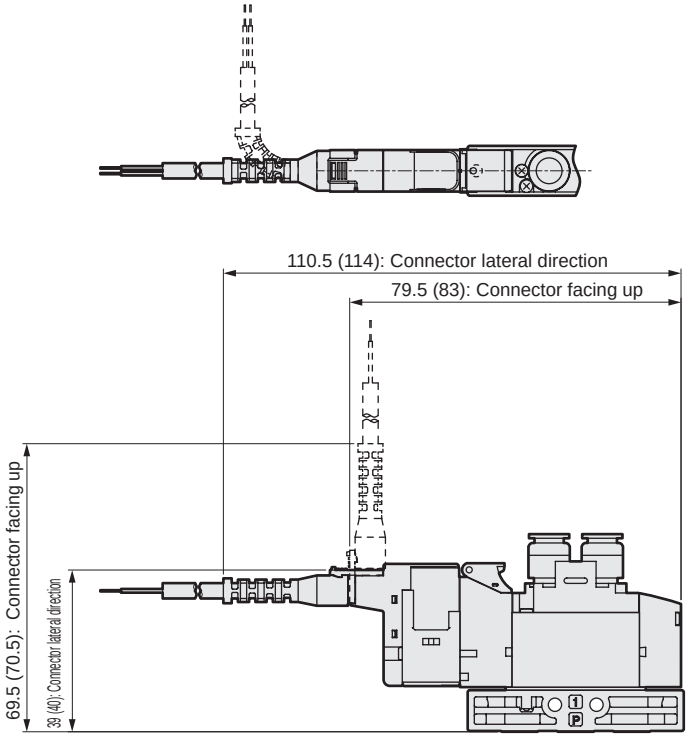

Note: Values in ( ) are applicable to AC voltages.

SCPD3
SCM
SSD2
MDC2
SMG
LCM
LCR
LCG
LCX
STM
STG
STR2
MRL2
GRC
Cylinder switch
MN3E MN4E
4GA/B
M4GA/B
MN4GA/B
F.R (module unit)
Clean F.R
Precision R
Press gauge Diff. press gauge
Electro-pneumatic R
Speed controller
Auxiliary valve
Fitting/ tube
Clean air unit
Pressure sensor
Flow rate sensor
Valve for air blow
Ending

Dimensions Port size; NPT thread

3GA2$^{1}_{11}$$^{1}_{66}$$^{1}_{67}$$^{1}_{76}$$^{1}_{77}$0R-P7*, 4GA2$^{1}_{2}$$^{1}_{3}$$^{1}_{4}$$^{1}_{5}$0R-P7*

● 2-position single grommet lead wire (blank)

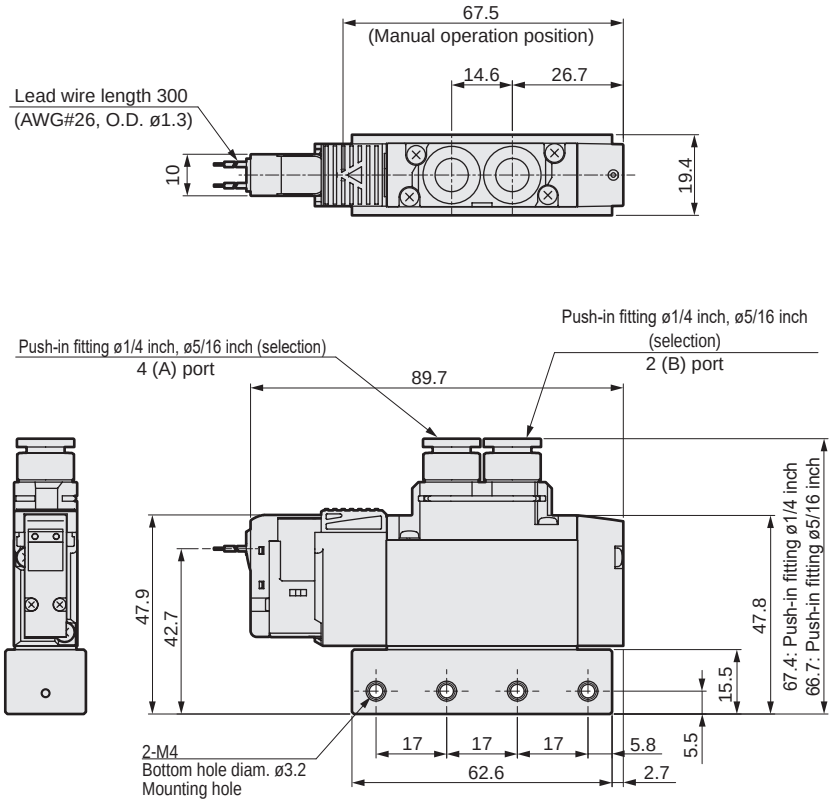

*Refer to page 753 for details on mounting holes.

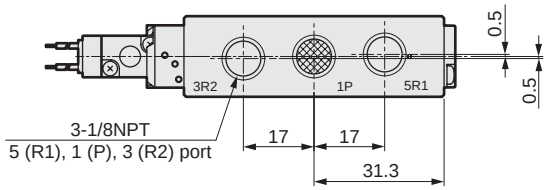

● Mounting plate (P)

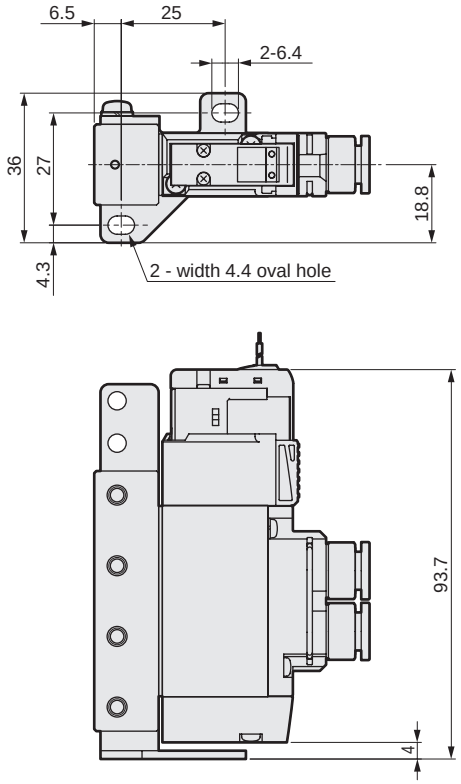

● 1/8NPT female thread (06N)

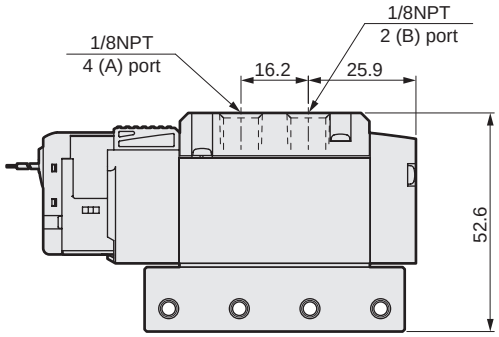

Dimensions Port size; NPT thread

● E connector (E)

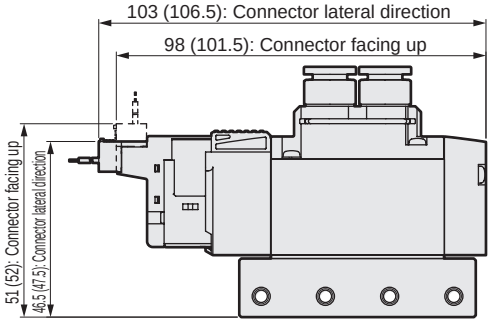

Note: Values in ( ) are applicable to AC voltages.

● EJ connector (E**J)

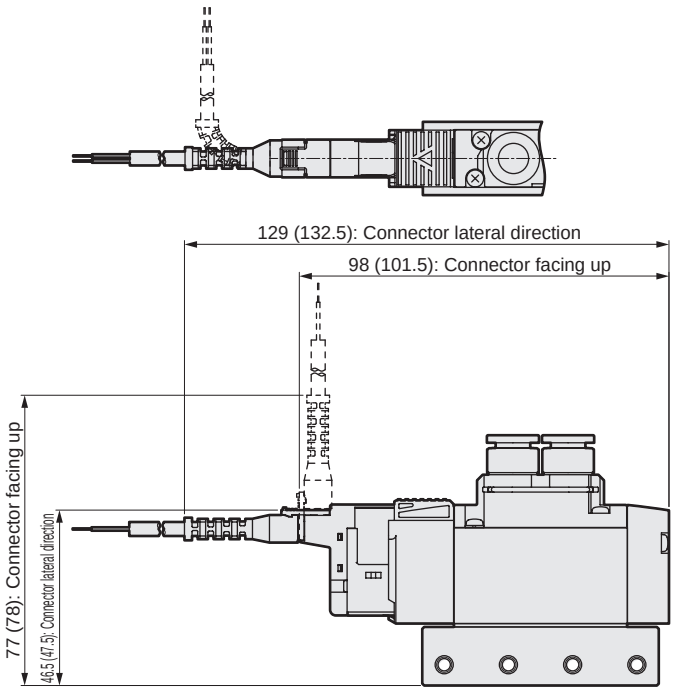

Note: Values in ( ) are applicable to AC voltages.

● DIN terminal box (B)

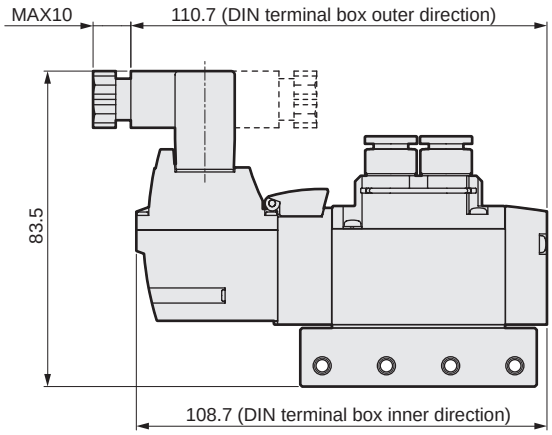

Note: The DIN terminal box assembly is shipped facing inward.

SCPD3
SCM
SSD2
MDC2
SMG
LCM
LCR
LCG
LCX
STM
STG
STR2
MRL2
GRC
Cylinder switch
MN3E MN4E
4GA/B
M4GA/B
MN4GA/B
F.R (module unit)
Clean F.R
Precision R
Press gauge Diff. press gauge
Electro-pneumatic R
Speed controller
Auxiliary valve
Fitting/ tube
Clean air unit
Pressure sensor
Flow rate sensor
Valve for air blow
Ending

Dimensions Port size; NPT thread

3GA3$^{1}_{11}$0R-P7*, 4GA3$^{1}_{2}{}^{3}_{4}{}^{5}$0R-P7*

● 2-position single grommet lead wire (blank)

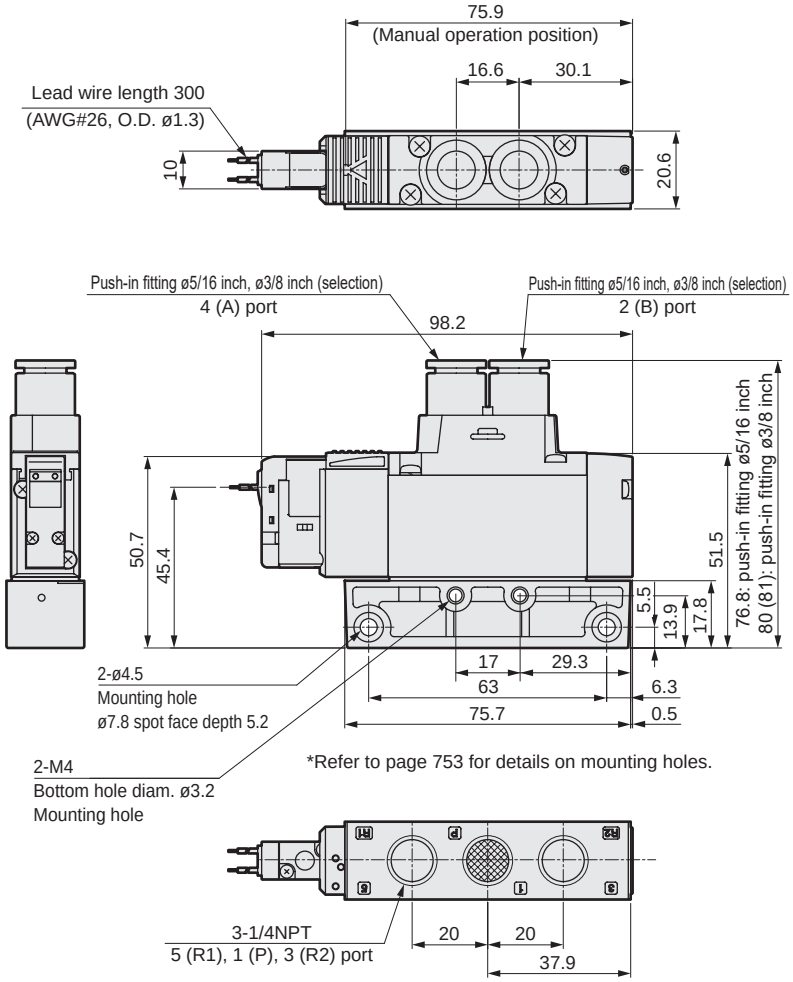

● Mounting plate (P)

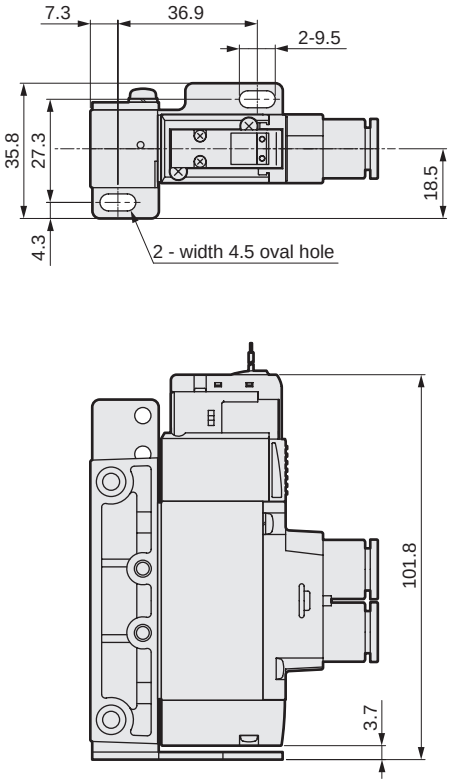

● NPT1/4 female thread (08N)

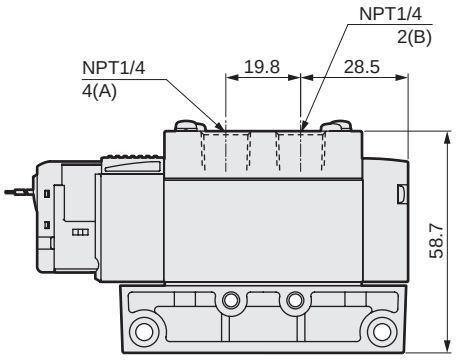

● G1/4 female thread (08G)

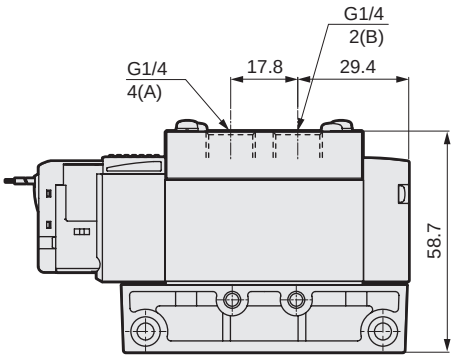

Dimensions Port size; NPT thread

● E connector (E)

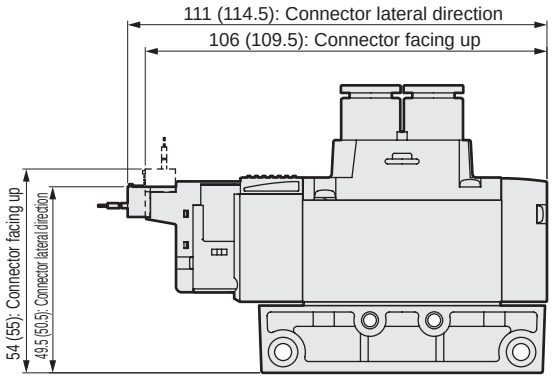

Note: Values in ( ) are applicable to AC voltages.

● EJ connector (E**J)

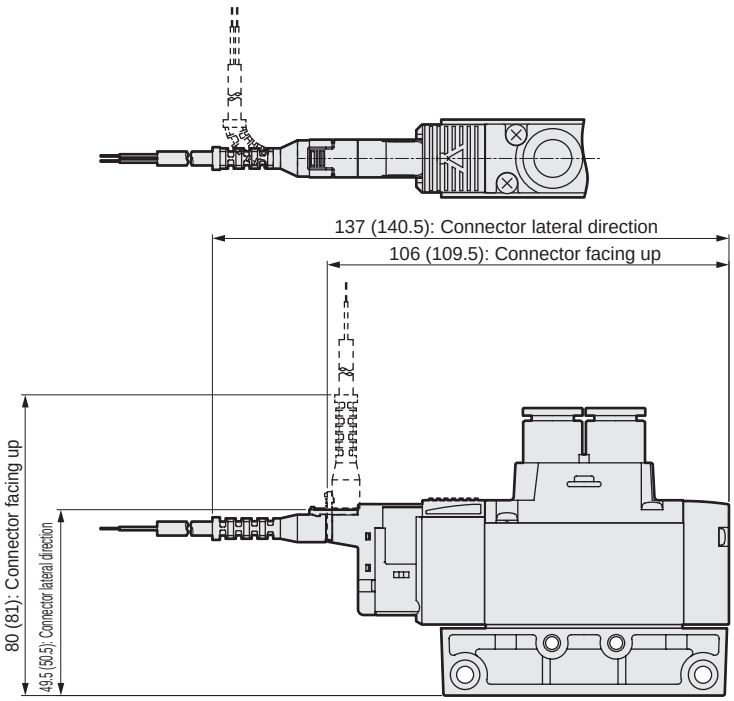

Note: Values in ( ) are applicable to AC voltages.

● DIN terminal box (B)

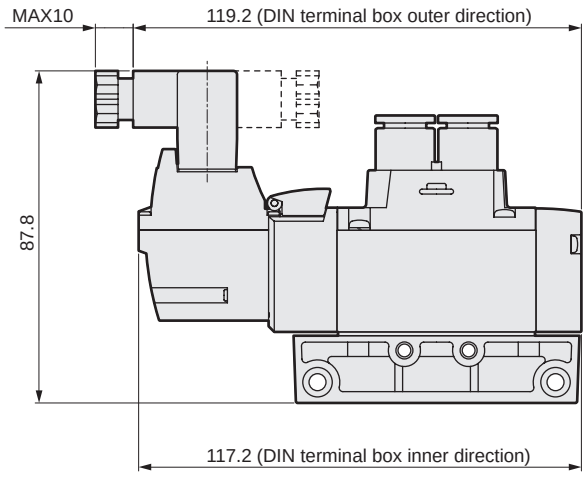

Note: The DIN terminal box assembly is shipped facing inward.

Dimensions Port size; G thread

3GA2 1/11/66/67/76/77 0R-P7*, 4GA2 1/2/3/4/5 0R-P7*

● 2-position single grommet lead wire (blank)

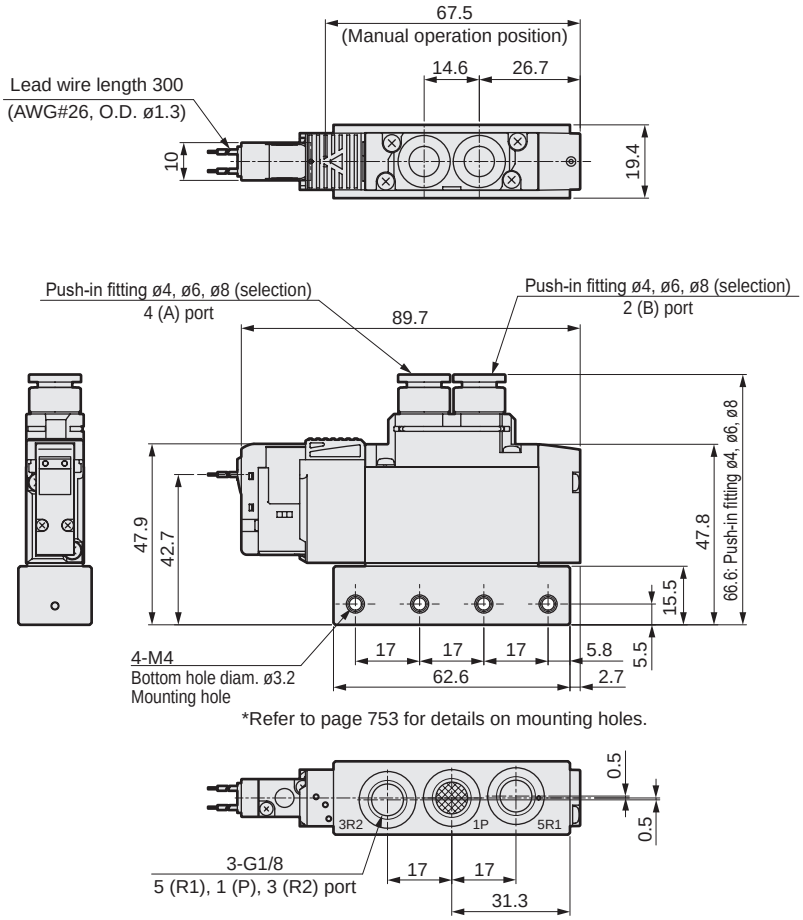

*Refer to page 753 for details on mounting holes.

● Mounting plate (P)

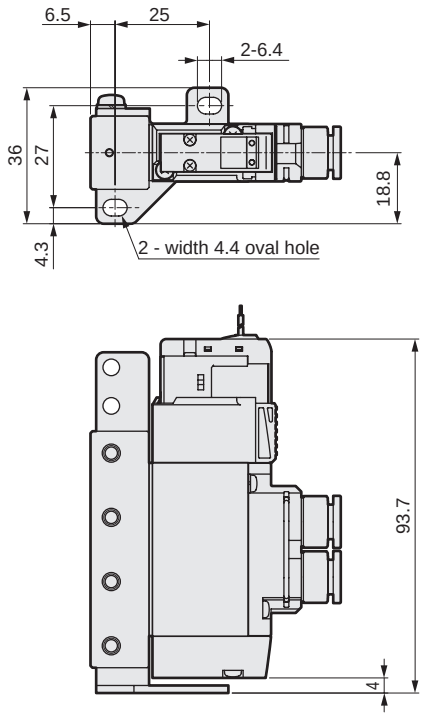

● G1/8 female thread (06G)

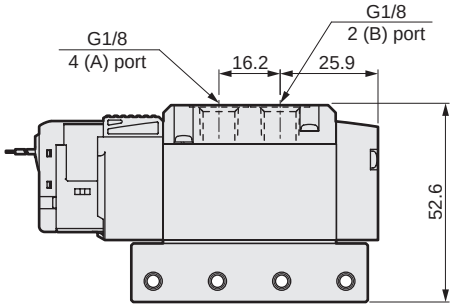

Dimensions Port size; G thread

● E connector (E)

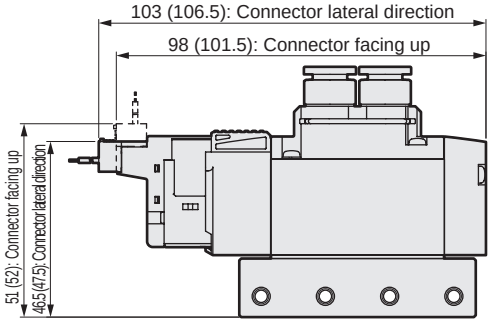

Note: Values in ( ) are applicable to AC voltages.

● EJ connector (E**J)

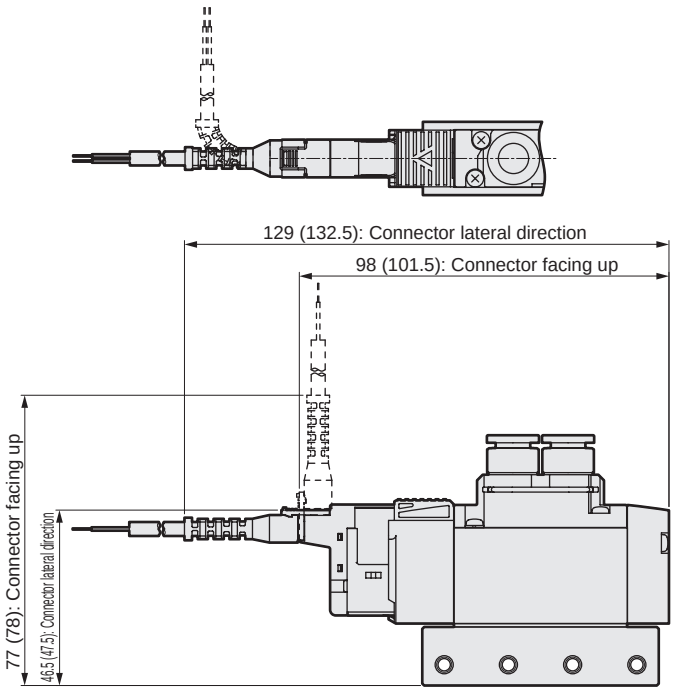

Note: Values in ( ) are applicable to AC voltages.

● DIN terminal box (B)

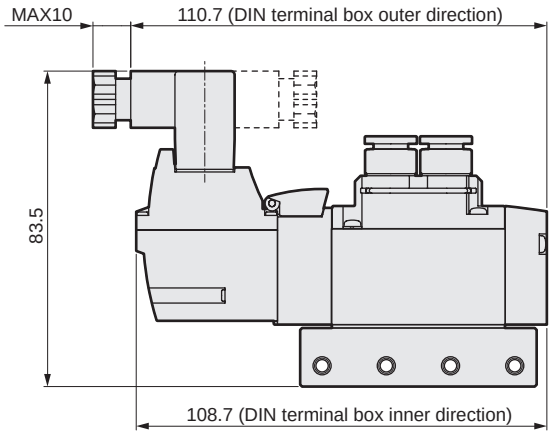

Note: The DIN terminal box assembly is shipped facing inward.

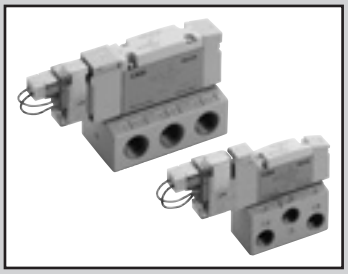

Discrete valve
Base piping

3GB1, 2/4GB1, 2, 3 Series

● Applicable cylinder bore size: ø 20 to ø 100

JIS symbol

● Dual 3-port valve integrated

(A side valve: NC, B side valve: NC)

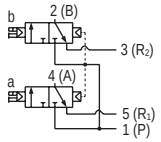

(A side valve: NC, B side valve: NO)

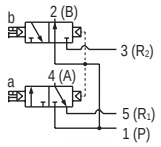

(A side valve: NO, B side valve: NC)

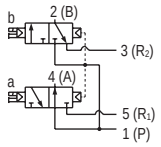

(A side valve: NO, B side valve: NO)

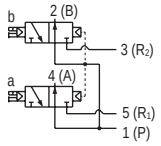

● 5-port valve

2-position single

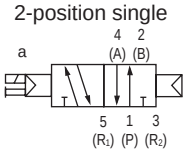

2-position double

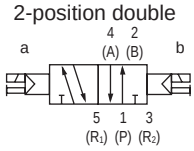

3-position
All ports closed

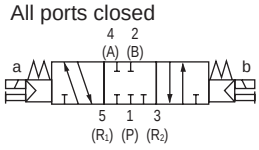

3-position A/B/R connection

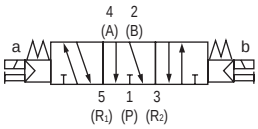

3 positions P/A/B connection

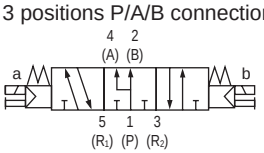

Structure and material restriction

	Structure	Material restriction			Model No.
P7 Series	Dust generation preventing				– P70
	Dust generation preventing	Copper-based materials prohibited	Silicon-based materials prohibited	Halogen-based materials prohibited (fluorine, chlorine, bromine)	– P74 Custom order product

Common specifications

Item		Description
Valve and operation		Pilot operated soft spool valve
Working fluid		Compressed air
Max. working press.	MPa	0.7
Min. working press.	MPa	0.2 (*3)
Proof pressure	MPa	1.05
Ambient temp	°C	-5 to 55 (no freezing)
Fluid temp	°C	5 to 55
Manual override		N oN-lock/locking common (standard)
Pilot exhaust method	Internal pilot	Main valve/pilot valve common exhaust
	External pilot	Main valve/pilot valve individual exhaust
Lubrication	(*1)	Not required
Degree of protection	(*2)	Dust-proof
Vibration resistance	m/s^2	50 or less
Shock resistance	m/s^2	300 or less
Atmosphere		Cannot be used in corrosive gas environments

*1 Use turbine oil Class 1 ISO VG32 for lubrication.Excessive or intermittent lubrication results in unstable operation.
*2 Avoid dripping water or oil, etc., during use. IP65 (water jet proof) applies for DIN terminal box specifications.However, the specified outer diameter of the cord and tightening torque must be used for fixing in place.
*3 The working pressure range is 0 to 0.7 MPa when the external pilot (option code: K) is selected.Set the external pilot pressure between 0.2 and 0.7 MPa.

Electrical specifications

Item		Description					
Rated voltage V		DC24	DC12	DC5	DC3	AC100	AC200
Voltage fluctuation range		±10□					
Holding current (A) (*4)	Standard	0.015 (0.017)	0.030 (0.034)	0.072 (0.082)	0.120 (0.136)	0.009 (0.009)	0.006 (0.006)
	With low exoergic/ energy circuit	0.005	0.010	-		-	
Power consumption W (*4)	Standard	0.35(0.40)		0.35(0.40)		-	
	With low exoergic/ energy circuit	0.1		-		-	
Apparent power VA (*4) (*5)	Standard	-		-		0.93 (0.98)	1.40
Thermal class		B					
Surge suppressor		Option					
Indicator		Lamp (option)					

*4: Values in ( ) apply when lamp is included.In addition, the type with low exoergic/energy circuit is only available with lamp.
*5: 200 VAC is the value of DIN terminal box with lamp.

Individual specifications

Port size		3GB1/4GB1	3GB2/4GB2	4GB3
Rc thread	A/B port	Rc1/8	Rc1/4	Rc1/4, Rc3/8
	P/R1/R2 port	Rc1/8	Rc1/4	Rc1/4, Rc3/8
NPT thread (*6)	A/B port	1/8NPT	1/4NPT	1/4NPT, 3/8NPT
	P/R1/R2 port	1/8NPT	1/4NPT	1/4NPT, 3/8NPT
G thread (*6)	A/B port	G1/8	G1/4	G1/4, G3/8
	P/R1/R2 port	G1/8	G1/4	G1/4, G3/8

*6: Available as made to order.

Performance/characteristics by model

Descriptions			3GB1/4GB1		3GB2/4GB2		4GB3	
			ON	OFF	ON	OFF	ON	OFF
Response time ms	Dual 3-port valve integrated		9	12	12	29	-	-
	2-position	Single	12	12	19	19	25	28
		Double	9	-	18	-	24	-
	3-position	ABR connection	8	15	17	30	23	45

Values with a lamp/surge suppressor are shown. The response time is the value at the 0.5 MPa supply pressure, 20°C, with no lubrication. It depends on the pressure and the lubricant quality.

Weight

Item				3GB1/4GB1	3GB2/4GB2	4GB3
Weight g	2-position	Single	Grommet lead wire	80 (38)	156 (74)	215 (96)
			E connector	82 (40)	158 (76)	217 (98)
			DIN terminal box	-	193 (111)	249 (130)
		Double	Grommet lead wire	97 (55)	173 (91)	233 (114)
			E connector	101 (59)	177 (95)	237 (118)
			DIN terminal box	-	216 (134)	273 (154)
	3-position	All ports closed	Grommet lead wire	98 (56)	184 (102)	242 (123)
			E connector	102 (60)	188 (106)	246 (127)
			DIN terminal box	-	227 (145)	282 (163)

・Values in ( ) do not include a discrete sub-plate. Values for the E connector include the socket assembly (with 300 mm lead wire). For the EJ connector, add 16 g/connector to the E connector weight.
・The weight of dual 3-port valve integrated is the same as that of 2-position double.

Flow characteristics

Model No.	Solenoid position		P→A/B		A/B→R1/R2	
			C [dm³/(s·bar)]	b	C [dm³/(s·bar)]	b
3GB1 4GB1	Dual 3-port valve integrated		0.92	0.08	1.1	0.26
	2-position		1.3	0.27	1.2	0.22
	3-position	All ports closed	1.1	0.31	1.1	0.27
		ABR connection	1.1	0.31	1.3	0.29
		PAB connection	1.4	0.30	1.1	0.26
3GB2 4GB2	Dual 3-port valve integrated		1.7	0.42	2.1	0.26
	2-position		2.6	0.20	2.6	0.19
	3-position	All ports closed	2.3	0.32	2.2	0.22
		ABR connection	2.2	0.23	2.6	0.16
		PAB connection	2.4	0.10	2.4	0.22
4GB3	2-position		4.3	0.24	4.2	0.24
	3-position	All ports closed	3.3	0.40	3.4	0.27
		ABR connection	3.3	0.36	4.2	0.18
		PAB connection	4.5	0.28	3.4	0.30

*1: Effective cross-sectional area S and sonic conductance C are converted as S ≈ 5.0 × C.

Ozone proof specifications ・ Cutting oil prohibited specifications

This can be set by selecting option “A” of Ⓔ in how to order on page 474.

3GB1, 2/4GB1, 2, 3 Series

Discrete valve; base piping

How to order

4GB1 1 0 R - 06 - E2 ( ) - 3 - P7

3GB1 66 0 R - 06 - E2 ( ) - 3 - P7

Discrete valve for mounting base

4GB1 1 9 R - 00 - E2 H - 3 - P7

3-port discrete valve for mounting base

3GB1 66 9 R - 00 - E2 H - 3 - P7

- Ⓐ Model No.
- Ⓑ Solenoid position
- Ⓒ Port size
- Ⓓ Electrical connections
- Ⓔ Option
- Ⓕ Voltage
- Ⓖ Clean room specifications

Refer to page 429 for the circuit diagram with surge suppressor/lamp.

Ⓐ Model No.

Code	Content		3GB1	3GB2	4GB1	4GB2	4GB3
Ⓑ Solenoid position							
1	2-position single				●	●	●
2	2-position double				●	●	●
3	3-position all ports closed				●	●	●
4	3-position ABR connection				●	●	●
5	3-position PAB connection				●	●	●
66	Dual 3-port valve integrated *1	A side valve: Normally closed B side valve: Normally closed	●	●			
67	Dual 3-port valve integrated *1	A side valve: Normally closed B side valve: Normally open	●	●			
76	Dual 3-port valve integrated *1	A side valve: Normally open B side valve: Normally closed	●	●			
77	Dual 3-port valve integrated *1	A side valve: Normally open B side valve: Normally open	●	●			

Ⓒ Port size

Port	4 (A)/2 (B) port	P/R1/R2 port (2)=Rc1/8 (3)=Rc1/4 (4)=Rc3/8				
06	Rc1/8	(2)		(2)		
08	Rc1/4		(3)		(3)	(3)
10	Rc3/8					(4)
Port	**4 (A)/2 (B) port**	**P/R1/R2 port (5)=1/8NPT (6)=1/4NPT (7)=3/8NPT**				
06N	1/8NPT (*2)	(5)		(5)		
08N	1/4NPT (*2)		(6)		(6)	(6)
10N	3/8NPT (*2)					(7)
Port	**4 (A)/2 (B) port**	**P/R1/R2 port (8)=G1/8 (9)=G1/4**				
06G	G1/8 (*2)	(8)		(8)		
08G	G1/4 (*2)		(9)		(9)	(9)
10G	G3/8 (*2)					(10)
00	Discrete valve for mounting base	●	●	●	●	●

Ⓓ Electrical connections

Blank	Grommet lead wire (300 mm) (*8)		●	●	●	●	●
B	DIN terminal box (Pg 7)	With surge suppressor/lamp (*9) (*11)		●		●	●
BN	DIN terminal box (Pg7) (no terminal box)	With surge suppressor (*9) (*11)		●		●	●
E-connector (upward/lateral common)							
E0	Lead wire (300 mm) (*10)		●	●	●	●	●
E00	Lead wire (500 mm) (*10)		●	●	●	●	●
E01	Lead wire (1000 mm) (*10)		●	●	●	●	●
E02	Lead wire (2000 mm) (*10)		●	●	●	●	●
E03	Lead wire (3000 mm) (*10)		●	●	●	●	●
E0N	No lead wire (without socket)(*10)		●	●	●	●	●
E1	No lead wire (socket/terminal attached)(*10)		●	●	●	●	●
E2	Lead wire (300 mm)	with surge suppressor and indicator lamp	●	●	●	●	●
E20	Lead wire (500 mm)	with surge suppressor and indicator lamp	●	●	●	●	●
E21	Lead wire (1000 mm)	with surge suppressor and indicator lamp	●	●	●	●	●
E22	Lead wire (2000 mm)	with surge suppressor and indicator lamp	●	●	●	●	●
E23	Lead wire (3000 mm)	with surge suppressor and indicator lamp	●	●	●	●	●
E2N	No lead wire (without socket)	with surge suppressor and indicator lamp	●	●	●	●	●
E3	No lead wire (socket/terminal attached)	with surge suppressor/indicator lamp	●	●	●	●	●
EJ-connector (socket with cover, upward/lateral common)							
E01J	Lead wire (1000 mm) (*10)		●	●	●	●	●
E02J	Lead wire (2000 mm) (*10)		●	●	●	●	●
E03J	Lead wire (3000 mm) (*10)		●	●	●	●	●
E21J	Lead wire (1000 mm)	with surge suppressor and indicator lamp	●	●	●	●	●
E22J	Lead wire (2000 mm)	with surge suppressor and indicator lamp	●	●	●	●	●
E23J	Lead wire (3000 mm)	with surge suppressor and indicator lamp	●	●	●	●	●

Ⓔ Option

Blank	Non-locking and locking model shared manual override	●	●	●	●	●
M	Non-locking manual override	●	●	●	●	●
H	With exhaust check valve (*3)	●	●	●	●	●
K	External pilot			●	●	●
A	Ozone/cutting oil proof	●	●	●	●	●
S	Surgeless (*4)	●	●	●	●	●
E	Low exoergic/energy-saving circuit (*4), (*5)	●	●	●	●	●
F	A/B port filter integrated (*6)	●	●	●	●	●

Ⓕ Voltage

1	100 VAC (with rectifier circuit)	●	●	●	●	●
2	200 VAC (with rectifier circuit) (*7)		●		●	●
3	24 VDC	●	●	●	●	●
4	12 VDC	●	●	●	●	●
7	3 VDC	○	○	○	○	○
8	5 VDC	○	○	○	○	○

Ⓖ Clean room specifications (*12, 13, 14)

	Structure	Material restriction						
P70	Exhaust treatment	-	●	●	●	●	●	●
P74	Exhaust treatment	Copper-/silicon-/halogen-based materials (fluorine, chlorine, bromine) are prohibited.	○	○	○	○	○	○

⚠ Precautions for model No. selection

*1: Combinations with an external pilot (K) are not supported. In addition, the external dimensions are the same dimensions as each of the 2-position double solenoids.
*2: Custom order product
***3: 3-position all ports closed and PAB connection are not provided with the exhaust check valve. Refer to page 751 for details on the exhaust check valve.**
4: Only E2 and E2*J connectors and 12/24 VDC are supported. In addition, selecting a combination of surgeless "S" and the low exoergic/energy-saving circuit "E" is not allowed.
*5: Applicable to surgeless specifications
*6: P port is equipped with a filter as standard.
*7: Supported only for the DIN terminal box.
*8: The grommet lead wire specifications are only applicable to DC voltages.
*9: AC voltage and 12/24VDC are supported. The lamp is incorporated in the terminal box.
*10: AC voltage is provided with a rectifier circuit.
*11 Terminal box is EN175301-803Type C, (Old DIN 43650-C) compliant.
*12: A (ozone compatible) and Ⓖ clean room specifications P74 cannot be combined.
*13: Copper-, silicon-, and halogen-free specifications are available with support for the main valve section.
*14: P74 Series is a custom order product.

is not available.
○ Custom order products. Contact CKD for details.

Electrical connections

Discrete valve/ individual wiring manifold

Blank Grommet lead wire

● **Lead wire length**
300 mm

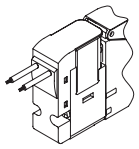

E1 E3 E connector with socket/terminal

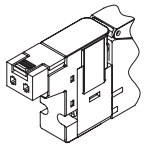

E0 E2 E connector

● **Lead wire length**
300 mm
500 mm
1000 mm
2000 mm
3000 mm

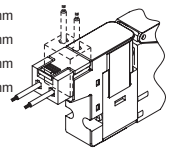

B DIN terminal box

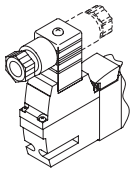

E0N E2N E connector without socket

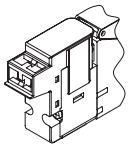

BN DIN terminal box (no terminal box)

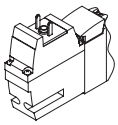

E0*J E2*J EJ connector

● **Lead wire length**
1 m
2 m
3 m

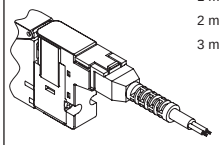

Dimensions

SCPD3
SCM
SSD2
MDC2
SMG
LCM
LCR
LCG
LCX
STM
STG
STR2
MRL2
GRC
Cylinder switch
MN3E MN4E
4GA/B
M4GA/B
MN4GA/B
F.R (module unit)
Clean F.R
Precision R
Press gauge Diff. press gauge
Electro-pneumatic R
Speed controller
Auxiliary valve
Fitting/ tube
Clean air unit
Pressure sensor
Flow rate sensor
Valve for air blow
Ending

4GB110R-P7* * For the NPT thread and G thread specifications, refer to pages 494 to 503.

● 2-position single grommet lead wire (blank)

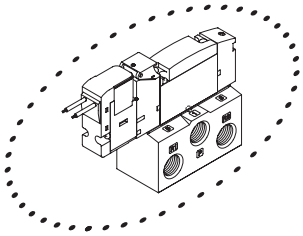

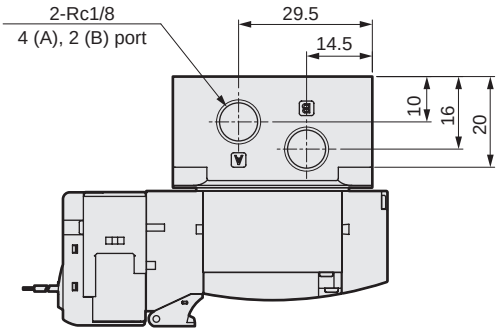

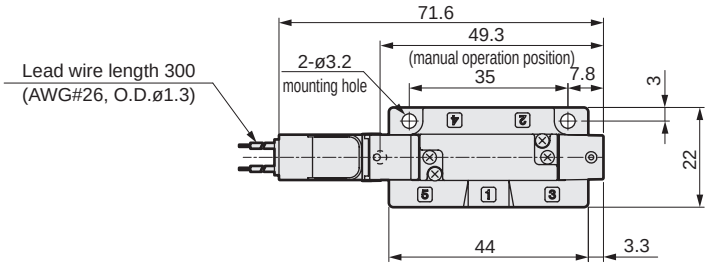

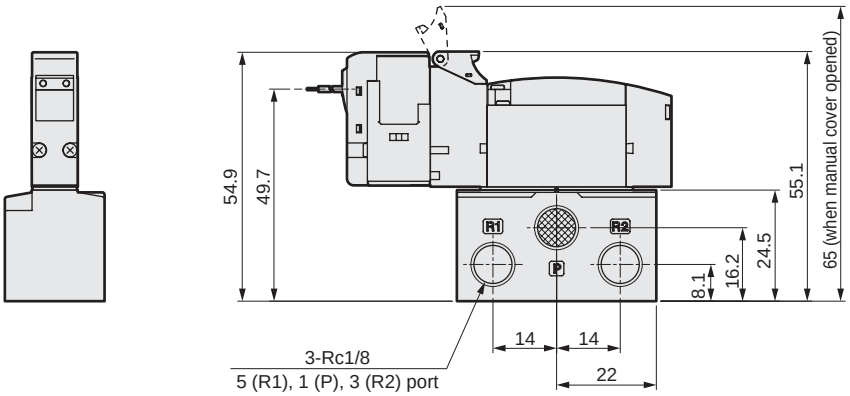

● External pilot (K)

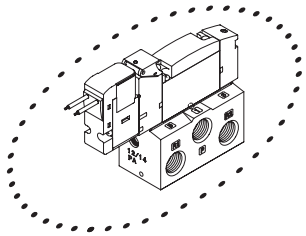

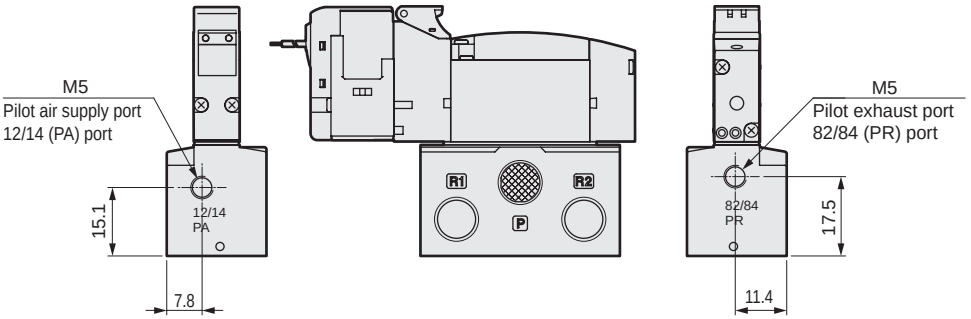

Dimensions

● E connector (E)

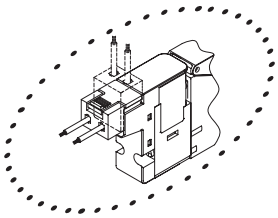

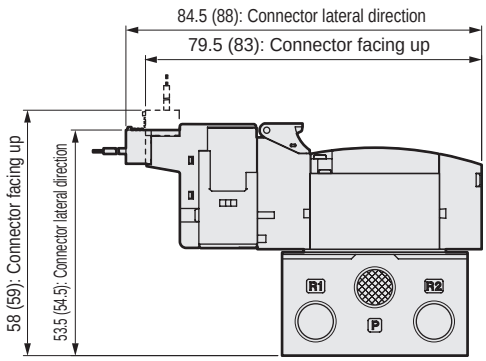

Note: Values in ( ) are applicable to AC voltages.

● EJ connector (E**J)

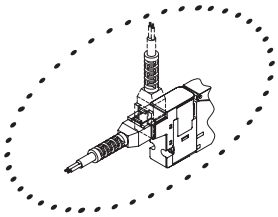

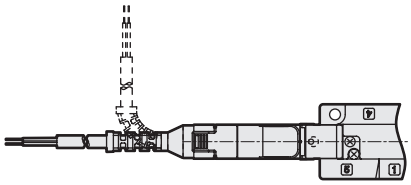

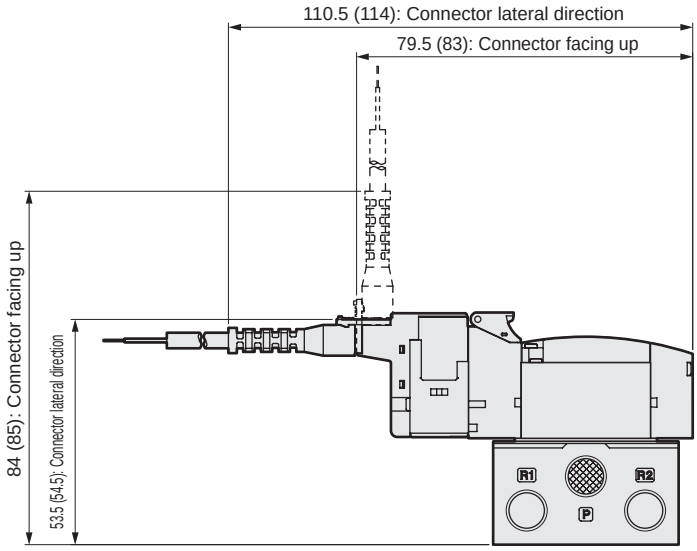

Note: Values in ( ) are applicable to AC voltages.

SCPD3
SCM
SSD2
MDC2
SMG
LCM
LCR
LCG
LCX
STM
STG
STR2
MRL2
GRC
Cylinder switch
MN3E MN4E
4GA/B
M4GA/B
MN4GA/B
F.R (module unit)
Clean F.R
Precision R
Press gauge Diff. press gauge
Electro-pneumatic R
Speed controller
Auxiliary valve
Fitting/ tube
Clean air unit
Pressure sensor
Flow rate sensor
Valve for air blow
Ending

Dimensions

4GB120R-P7* * For the NPT thread and G thread specifications, refer to pages 494 to 503.

● 2-position double grommet lead wire (blank)

3GB1660R/3GB1670R/3GB1760R/3GB1770R-P7*

● Dual 3-port valve integrated grommet lead wire (blank)

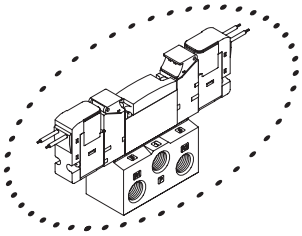

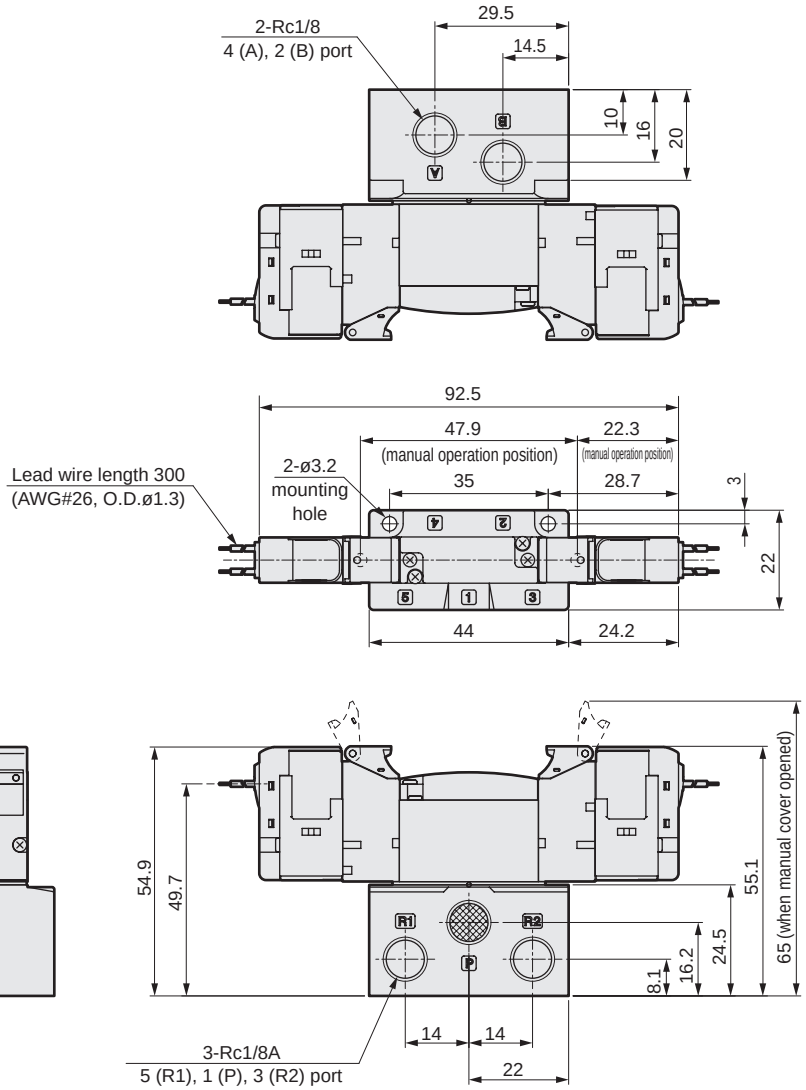

● External pilot (K)

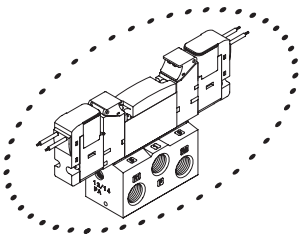

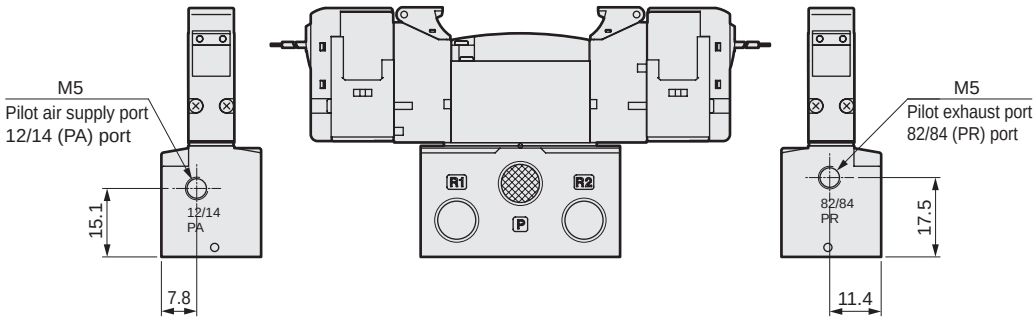

Note: Combination of dual 3-port valve integrated and external pilot is not available.

Dimensions

● E connector (E)

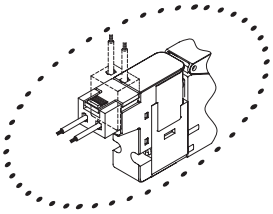

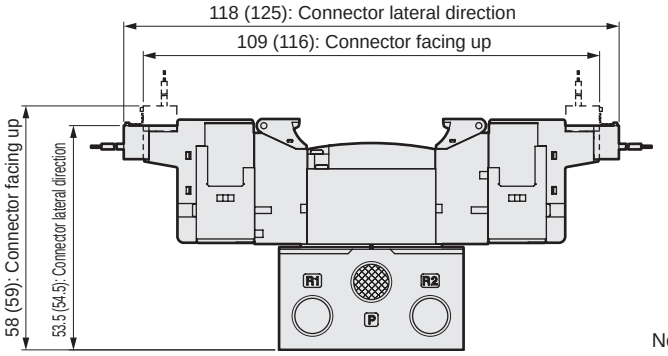

Note: Values in ( ) are applicable to AC voltages.

● EJ connector (E**J)

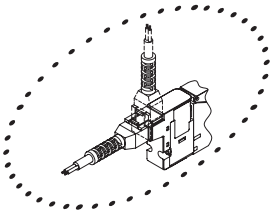

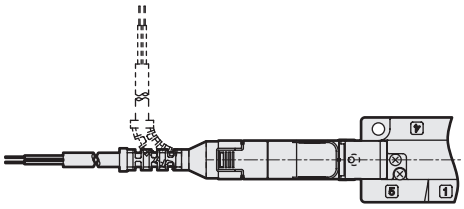

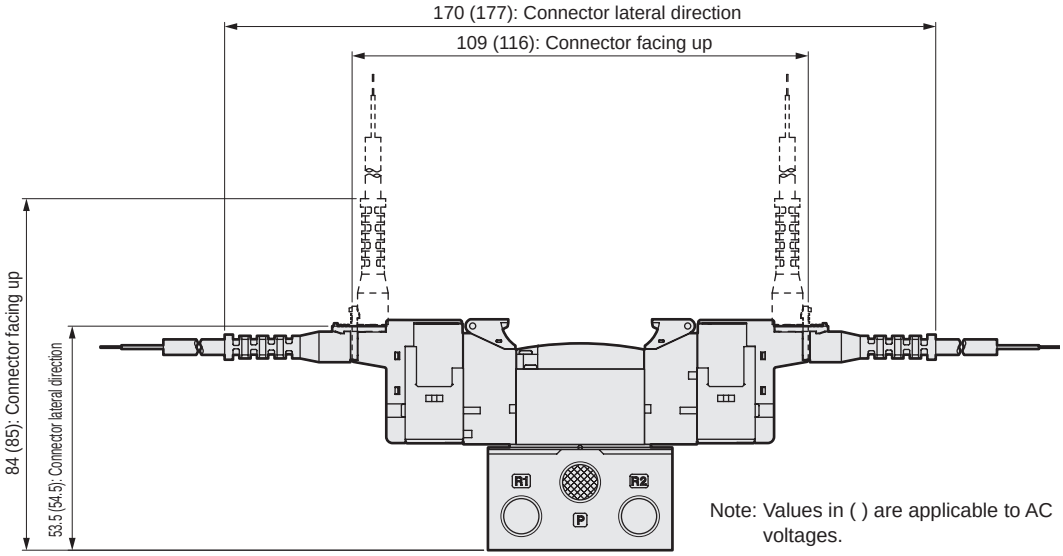

Note: Values in ( ) are applicable to AC voltages.

SCPD3
SCM
SSD2
MDC2
SMG
LCM
LCR
LCG
LCX
STM
STG
STR2
MRL2
GRC
Cylinder switch
MN3E MN4E
4GA/B
M4GA/B
MN4GA/B
F.R (module unit)
Clean F.R
Precision R
Press gauge Diff. press gauge
Electro-pneumatic R
Speed controller
Auxiliary valve
Fitting/ tube
Clean air unit
Pressure sensor
Flow rate sensor
Valve for air blow
Ending

Dimensions CAD

4GB1$^{3}_{4}{}^{}_{5}$0R-P7* * For the NPT thread and G thread specifications, refer to pages 494 to 503.

● 3 position grommet lead wire (blank)

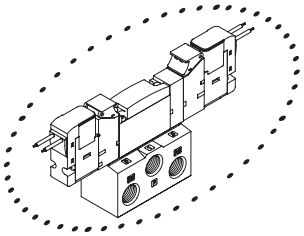

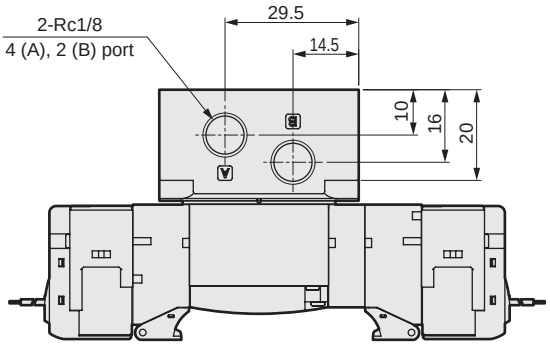

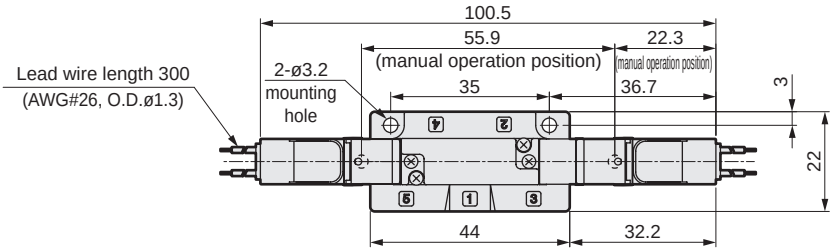

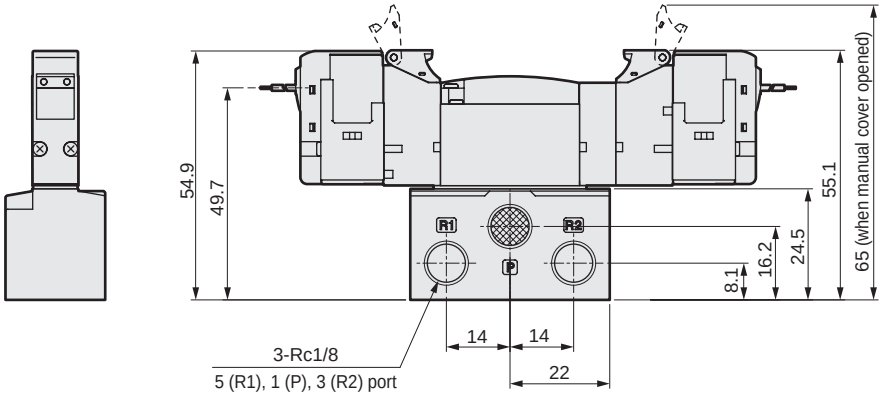

● External pilot (K)

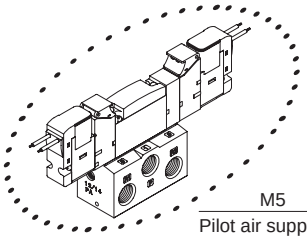

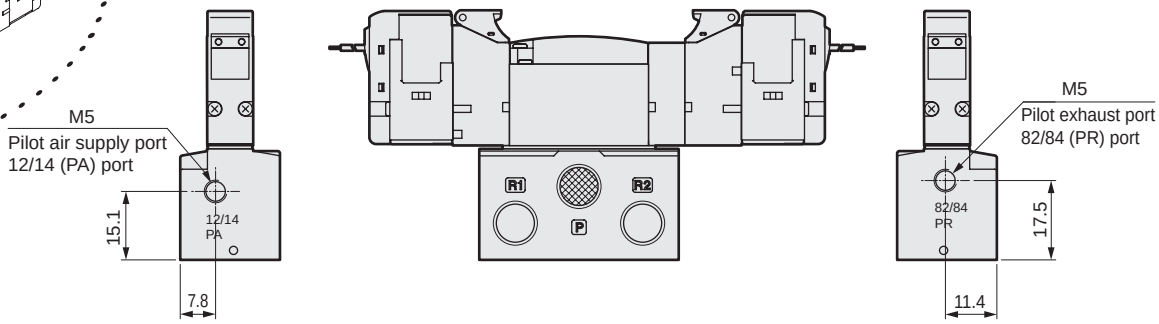

Dimensions

● E connector (E)

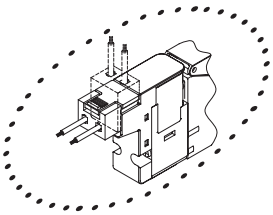

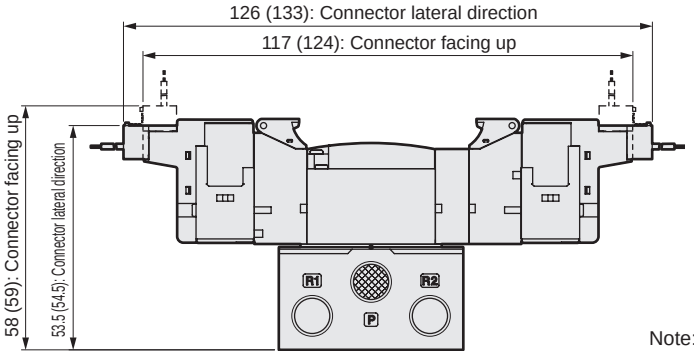

Note: Values in ( ) are applicable to AC voltages.

● EJ connector (E**J)

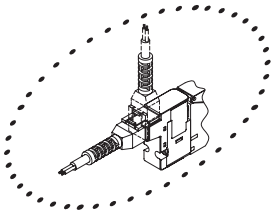

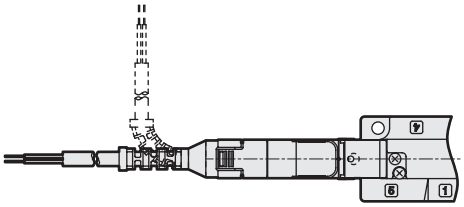

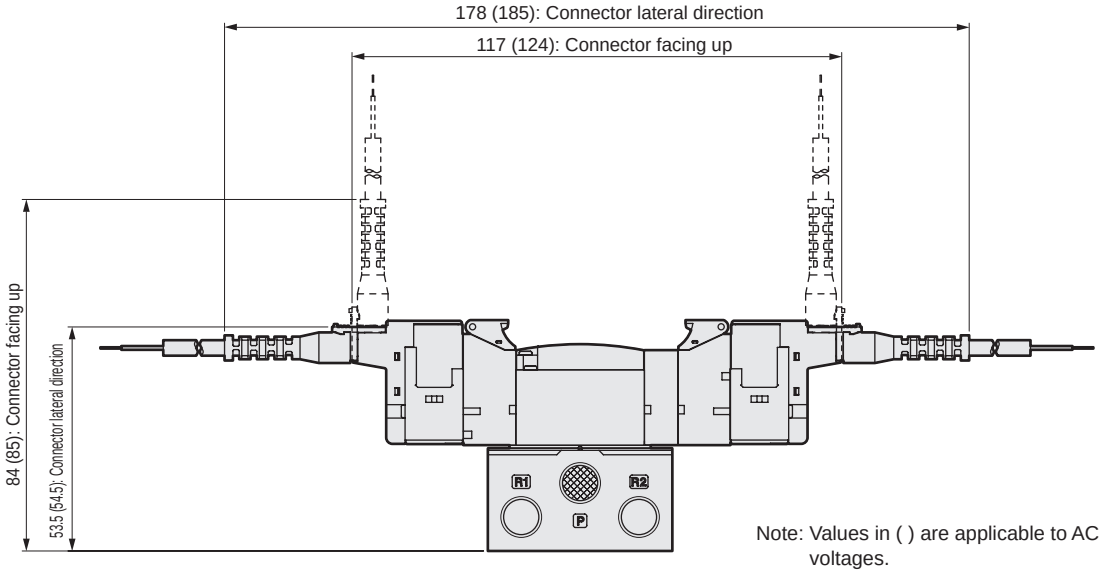

Note: Values in ( ) are applicable to AC voltages.

Dimensions

SCPD3
SCM
SSD2
MDC2
SMG
LCM
LCR
LCG
LCX
STM
STG
STR2
MRL2
GRC
Cylinder switch
MN3E MN4E
4GA/B
M4GA/B
MN4GA/B
F.R (module unit)
Clean F.R
Precision R
Press gauge Diff. press gauge
Electro-pneumatic R
Speed controller
Auxiliary valve
Fitting/ tube
Clean air unit
Pressure sensor
Flow rate sensor
Valve for air blow
Ending

4GB210R-P7* * For the NPT thread and G thread specifications, refer to pages 494 to 503.

● 2-position single grommet lead wire (blank)

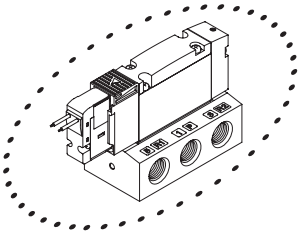

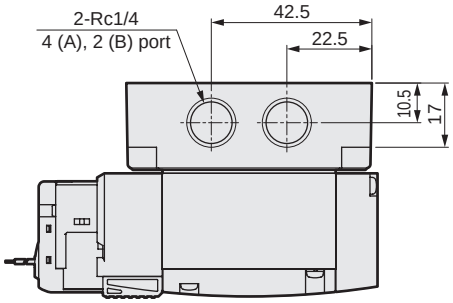

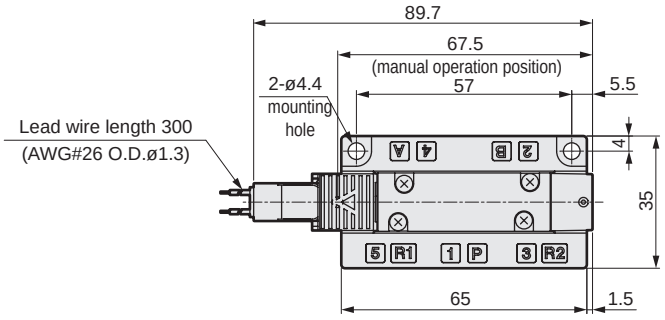

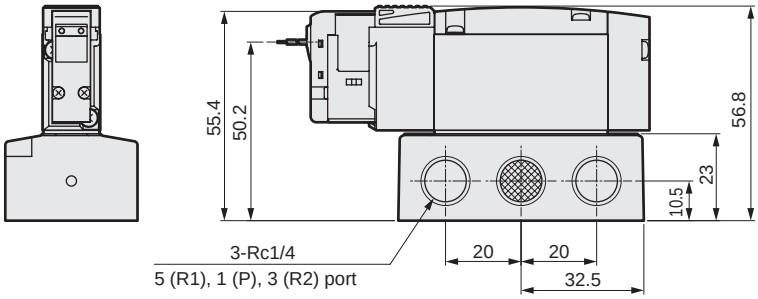

● External pilot (K)

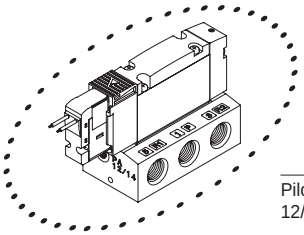

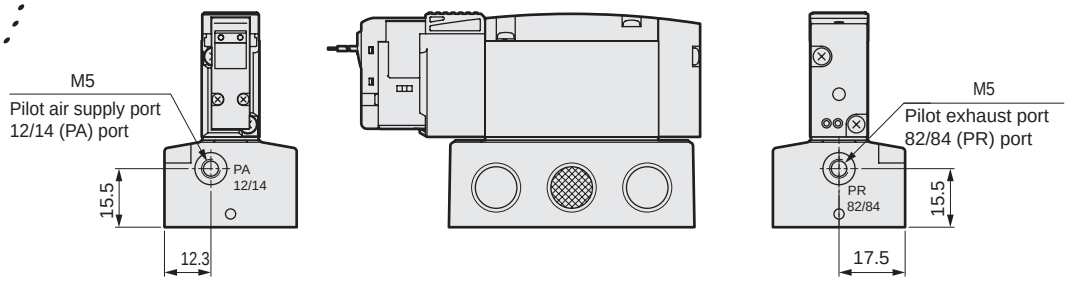

Dimensions

● E connector (E)

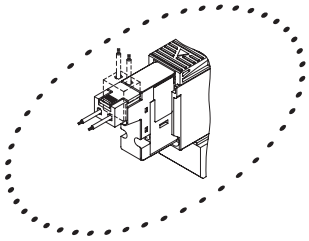

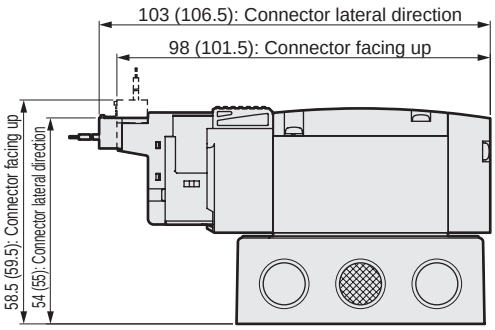

Note: Values in ( ) are applicable to AC voltages.

● EJ connector (E**J)

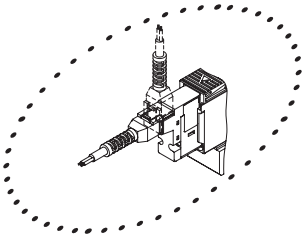

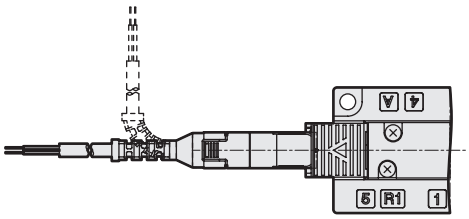

Note: Values in ( ) are applicable to AC voltages.

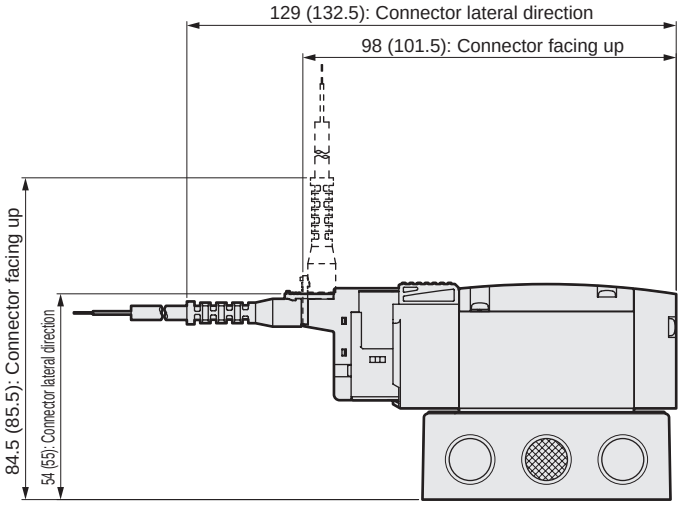

● DIN terminal box (B)

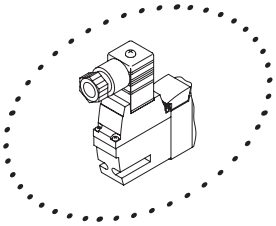

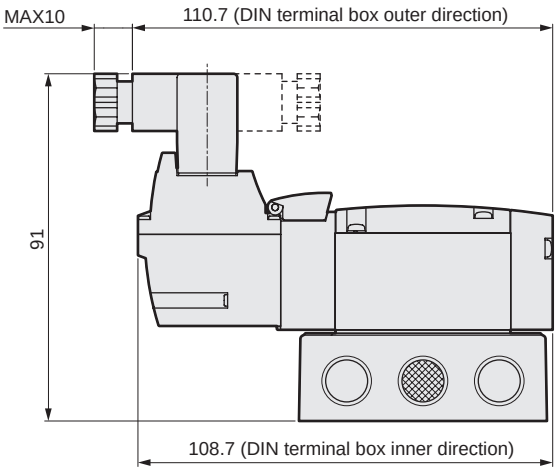

Note: The DIN terminal box assembly is shipped facing inward.

SCPD3
SCM
SSD2
MDC2
SMG
LCM
LCR
LCG
LCX
STM
STG
STR2
MRL2
GRC
Cylinder switch
MN3E MN4E
4GA/B
M4GA/B
MN4GA/B
F.R (module unit)
Clean F.R
Precision R
Press gauge Diff. press gauge
Electro-pneumatic R
Speed controller
Auxiliary valve
Fitting/ tube
Clean air unit
Pressure sensor
Flow rate sensor
Valve for air blow
Ending

Dimensions CAD

4GB220R-P7* * For the NPT thread and G thread specifications, refer to pages 494 to 503.

● 2-position double grommet lead wire (blank)

3GB2660R/3GB2670R/3GB2760R/3GB2770R-P7*

● Dual 3-port valve integrated grommet lead wire (blank)

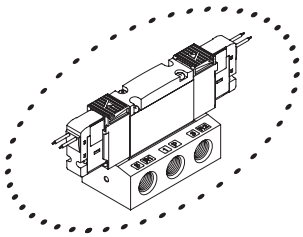

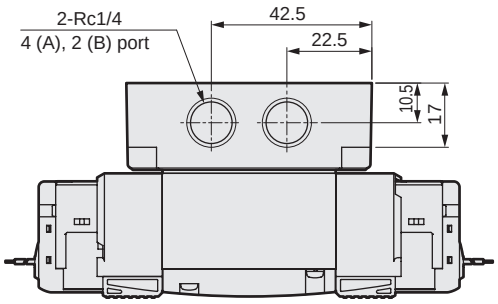

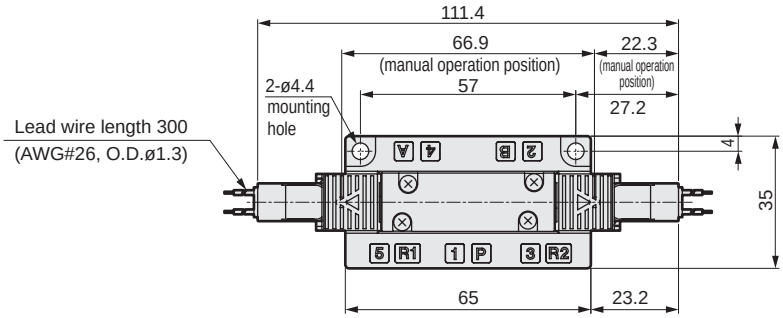

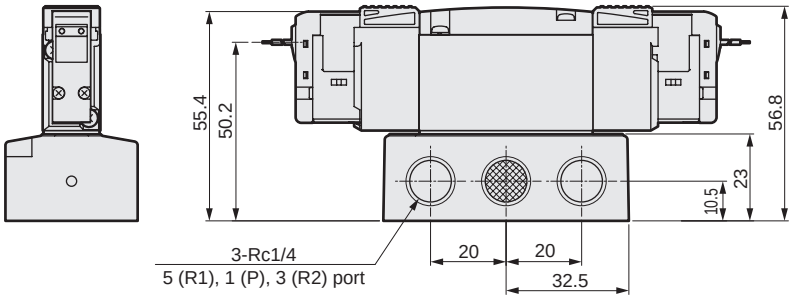

● External pilot (K)

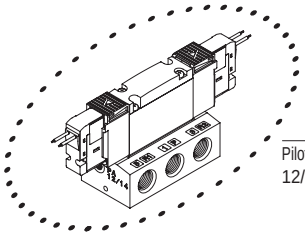

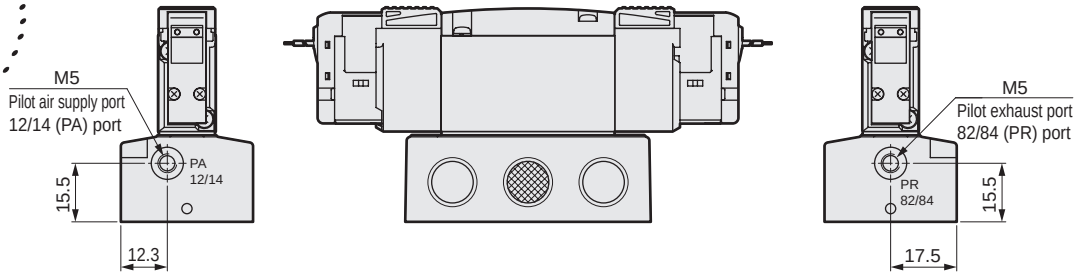

Note: Combination of dual 3-port valve integrated and external pilot is not available.

Dimensions

● E connector (E)

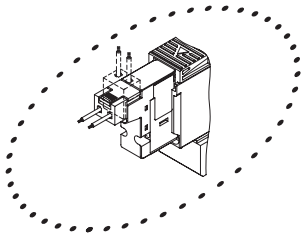

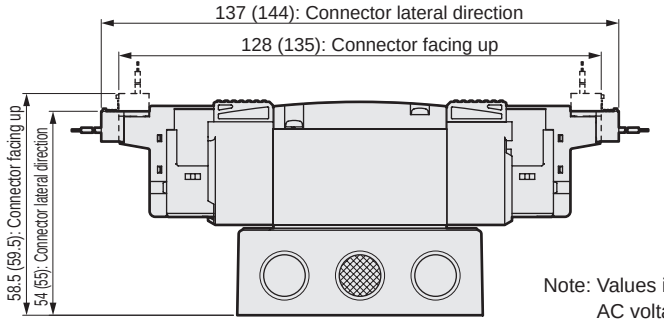

Note: Values in ( ) are applicable to AC voltages.

● EJ connector (E**J)

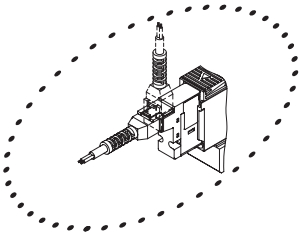

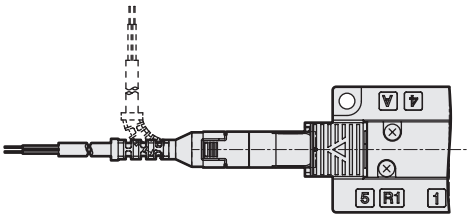

Note: Values in ( ) are applicable to AC voltages.

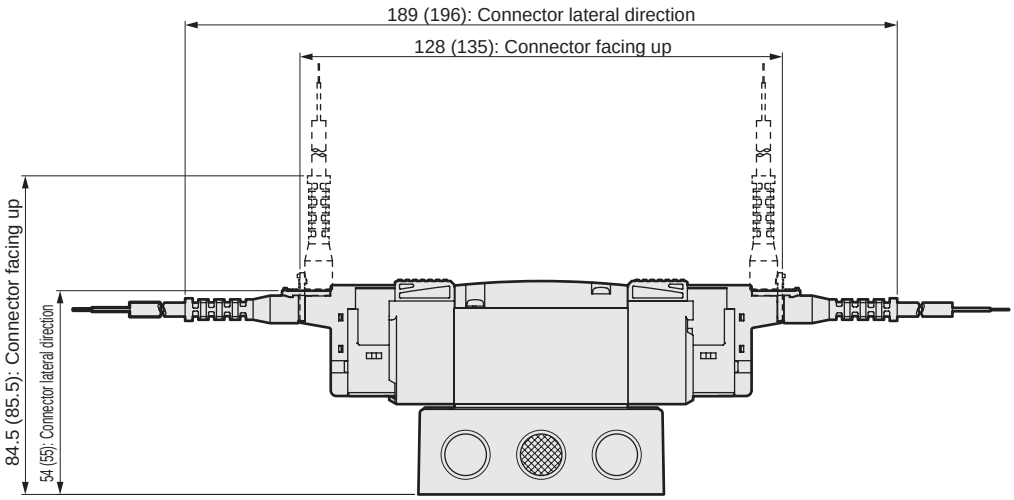

● DIN terminal box (B)

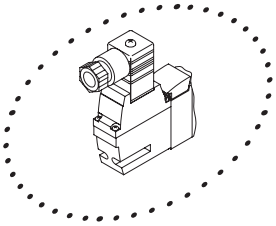

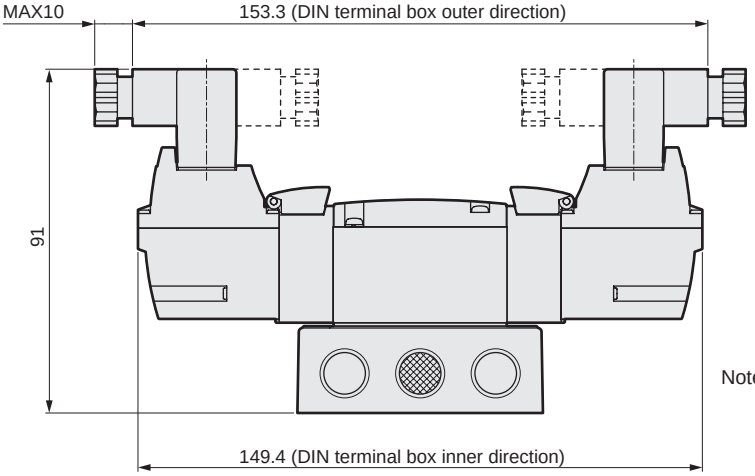

Note: The DIN terminal box assembly is shipped facing inward.

SCPD3
SCM
SSD2
MDC2
SMG
LCM
LCR
LCG
LCX
STM
STG
STR2
MRL2
GRC
Cylinder switch
MN3E MN4E
4GA/B
M4GA/B
MN4GA/B
F.R (module unit)
Clean F.R
Precision R
Press gauge Diff. press gauge
Electro-pneumatic R
Speed controller
Auxiliary valve
Fitting/ tube
Clean air unit
Pressure sensor
Flow rate sensor
Valve for air blow
Ending

Dimensions CAD

4GB2 $^{3}_{4}_{5}$0R-P7* * For the NPT thread and G thread specifications, refer to pages 494 to 503.

● 3 position grommet lead wire (blank)

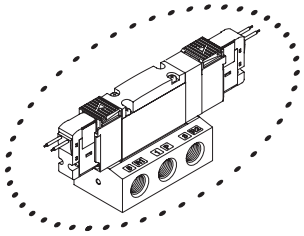

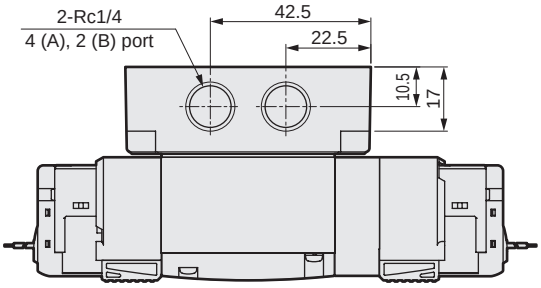

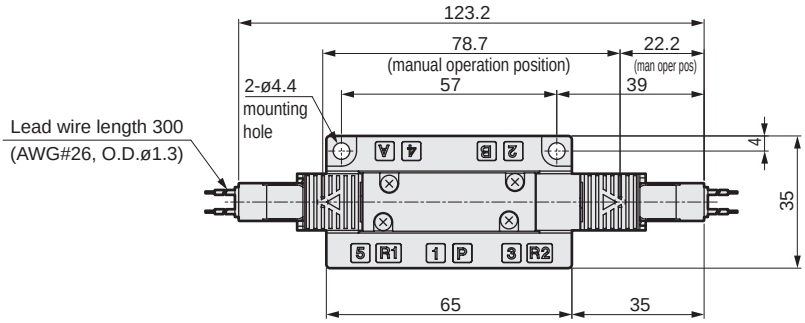

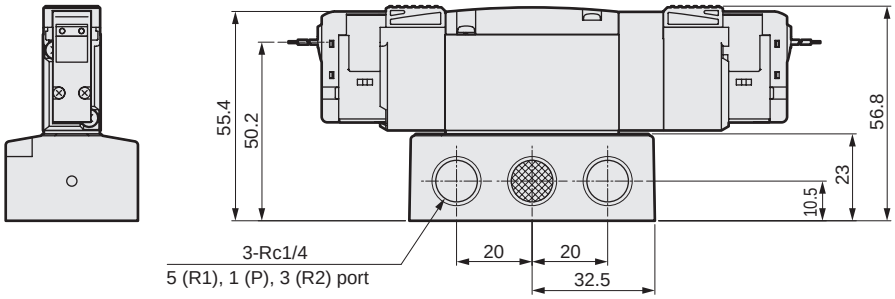

● External pilot (K)

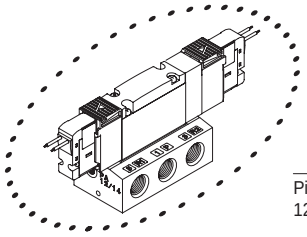

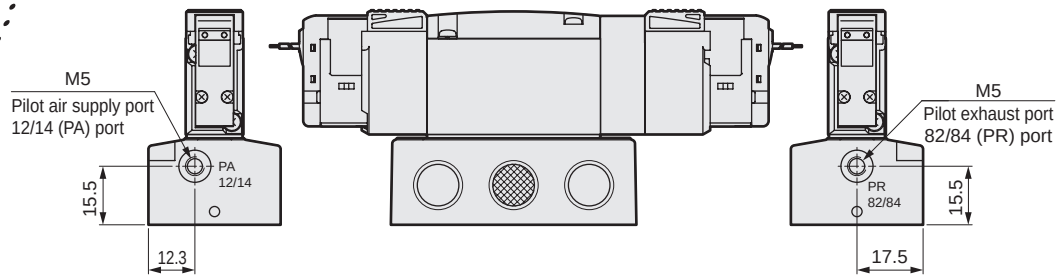

Dimensions

● E connector (E)

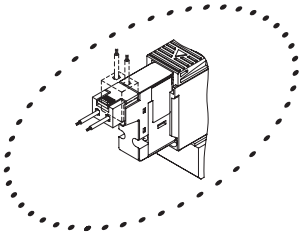

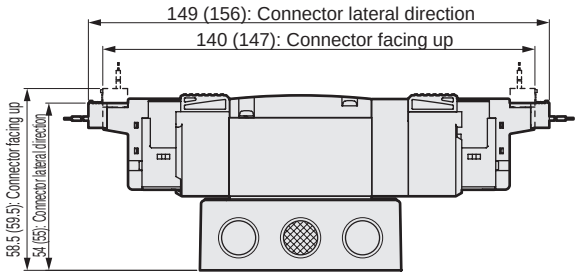

Note: Values in ( ) are applicable to AC voltages.

● EJ connector (E**J)

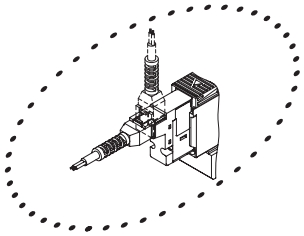

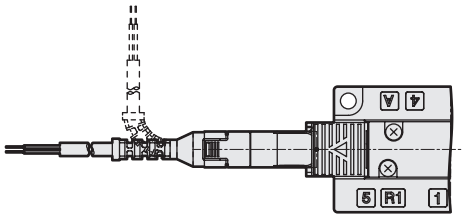

Note: Values in ( ) are applicable to AC voltages.

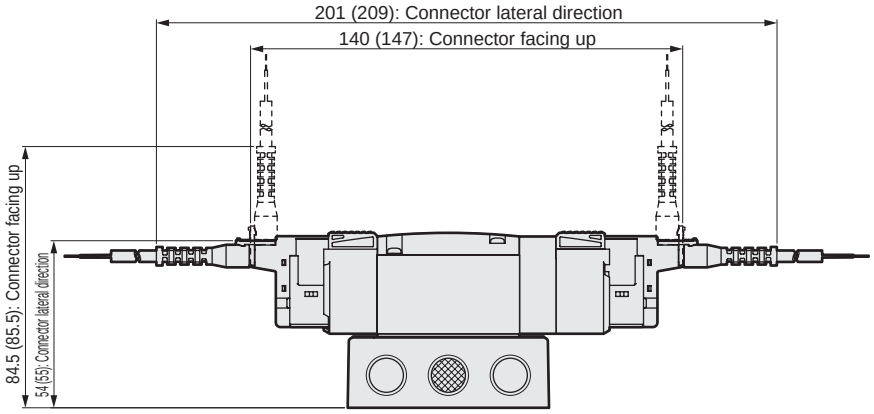

● DIN terminal box (B)

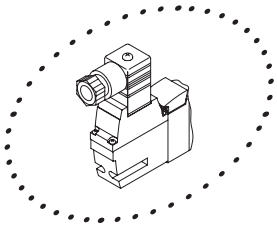

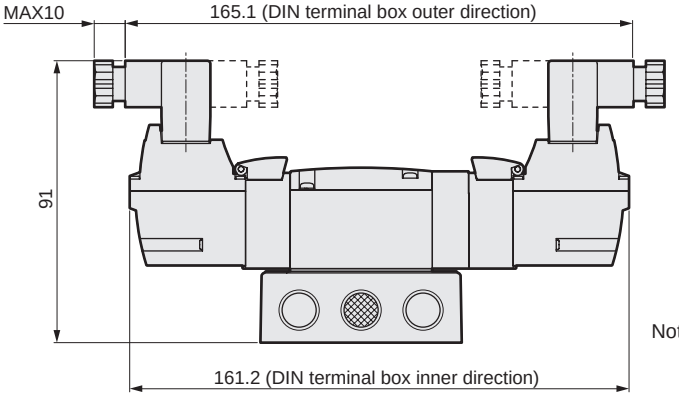

Note: The DIN terminal box assembly is shipped facing inward.

SCPD3
SCM
SSD2
MDC2
SMG
LCM
LCR
LCG
LCX
STM
STG
STR2
MRL2
GRC
Cylinder switch
MN3E MN4E
4GA/B
M4GA/B
MN4GA/B
F.R (module unit)
Clean F.R
Precision R
Press gauge Diff. press gauge
Electro-pneumatic R
Speed controller
Auxiliary valve
Fitting/ tube
Clean air unit
Pressure sensor
Flow rate sensor
Valve for air blow
Ending

Dimensions CAD

4GB310R-P7* * For the NPT thread and G thread specifications, refer to pages 494 to 503.

● 2-position single grommet lead wire (blank)

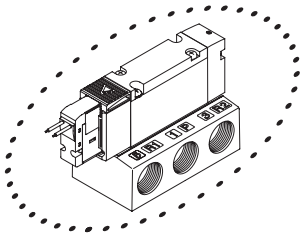

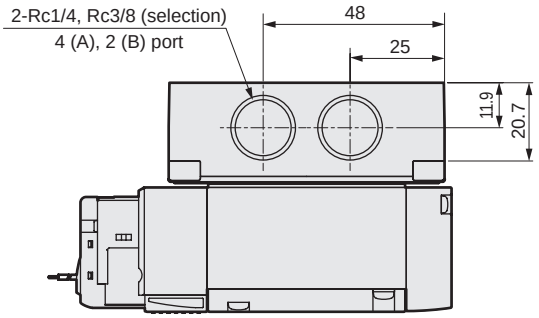

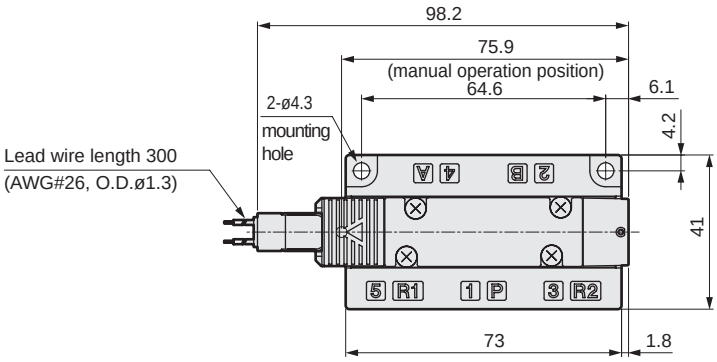

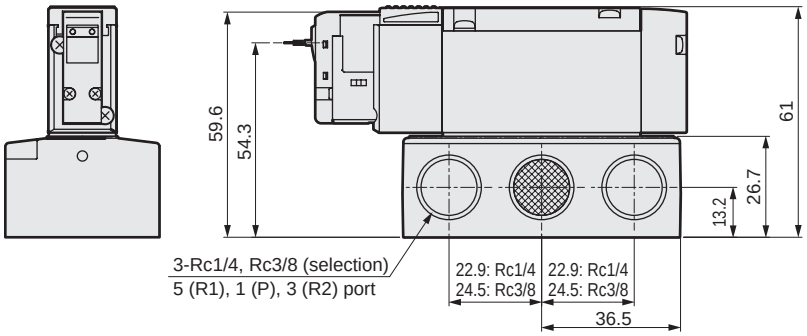

● External pilot (K)

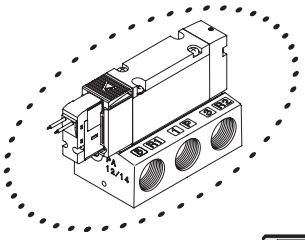

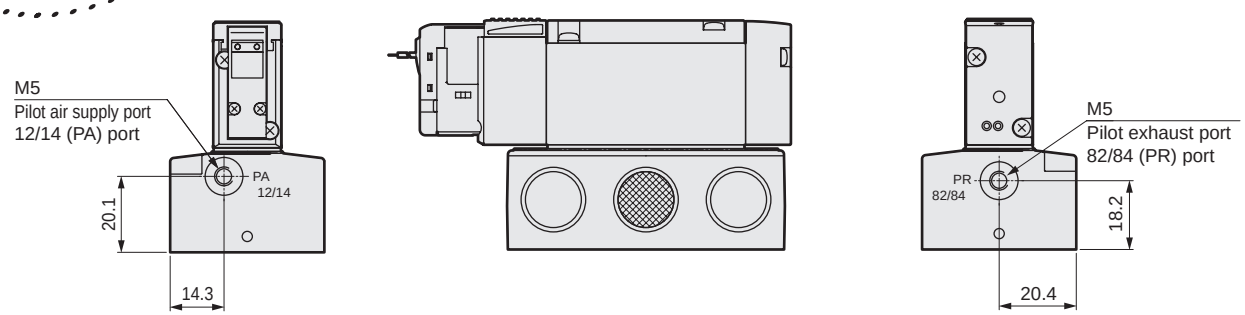

Dimensions

● E connector (E)

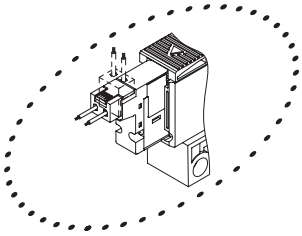

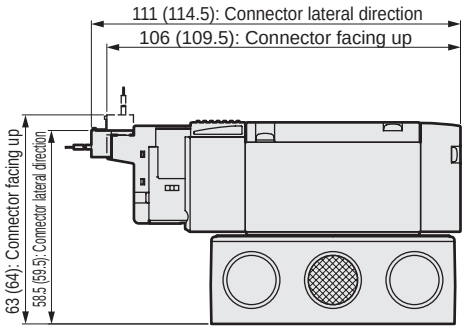

Note: Values in ( ) are applicable to AC voltages.

● EJ connector (E**J)

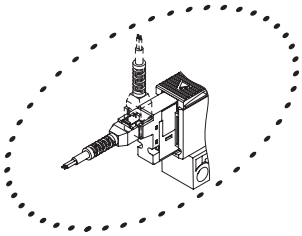

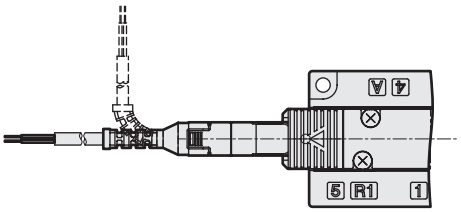

Note: Values in ( ) are applicable to AC voltages.

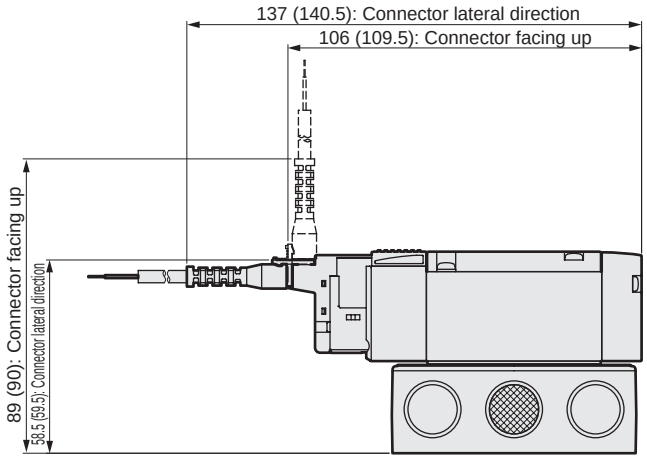

● DIN terminal box (B)

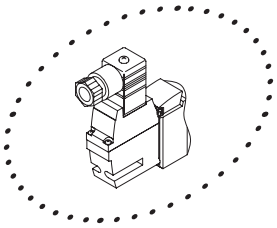

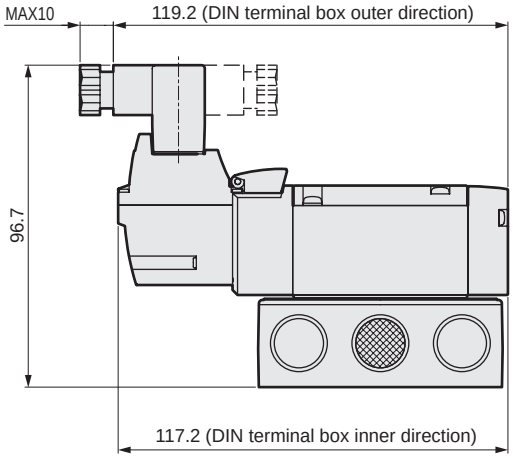

Note: The DIN terminal box assembly is shipped facing inward.

SCPD3
SCM
SSD2
MDC2
SMG
LCM
LCR
LCG
LCX
STM
STG
STR2
MRL2
GRC
Cylinder switch
MN3E MN4E
4GA/B
M4GA/B
MN4GA/B
F.R (module unit)
Clean F.R
Precision R
Press gauge Diff. press gauge
Electro-pneumatic R
Speed controller
Auxiliary valve
Fitting/ tube
Clean air unit
Pressure sensor
Flow rate sensor
Valve for air blow
Ending

Dimensions CAD

4GB320R-P7* * For the NPT thread and G thread specifications, refer to pages 494 to 503.

● 2-position double grommet lead wire (blank)

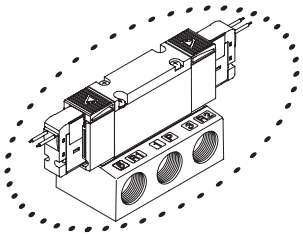

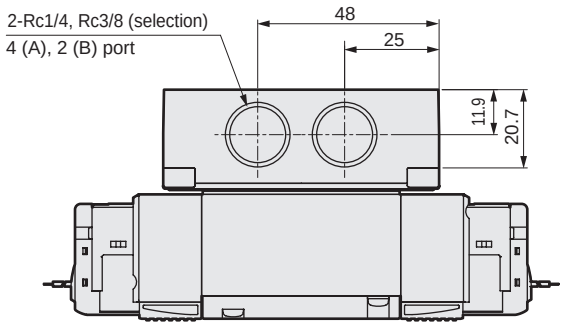

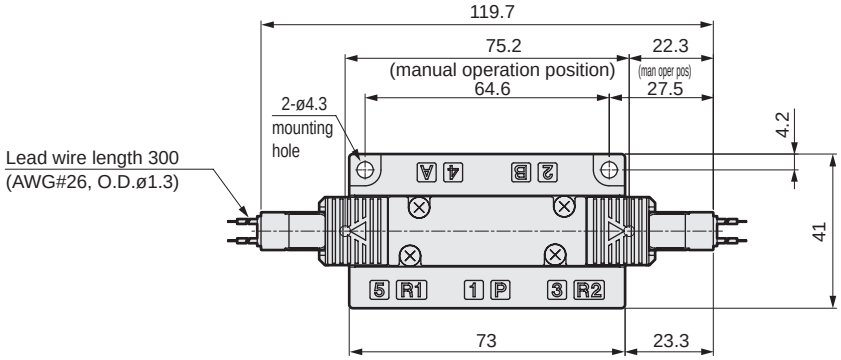

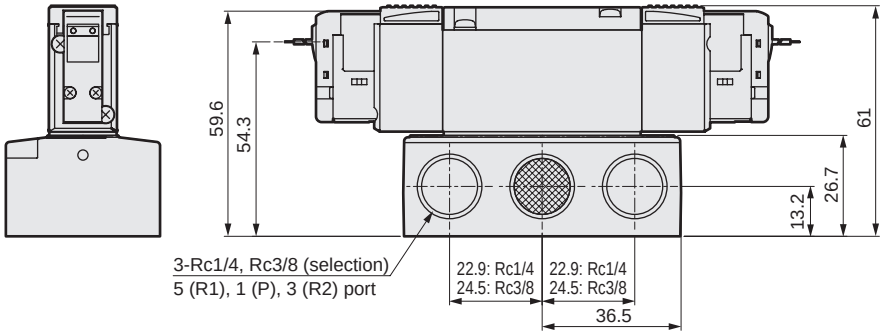

● External pilot (K)

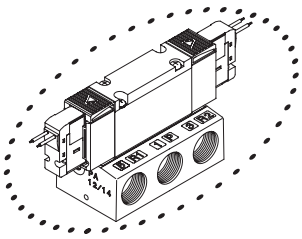

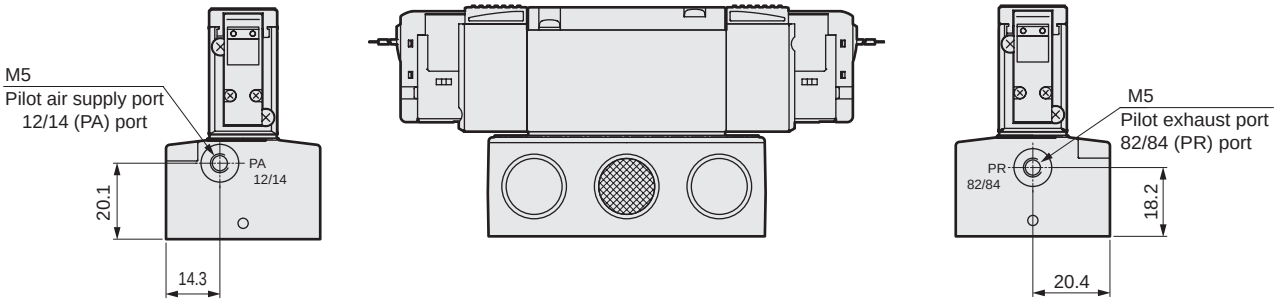

Dimensions

● E connector (E)

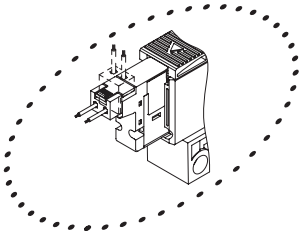

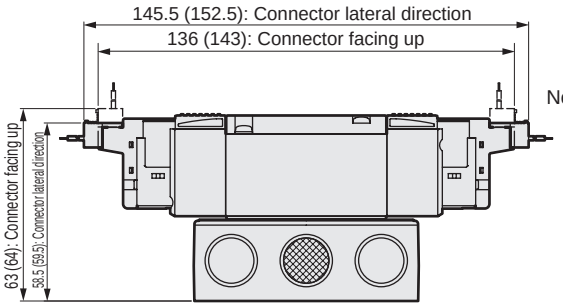

Note: Values in ( ) are applicable to AC voltages.

● EJ connector (E**J)

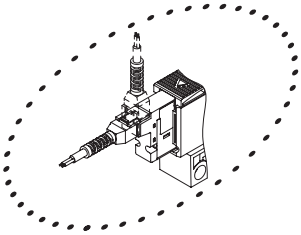

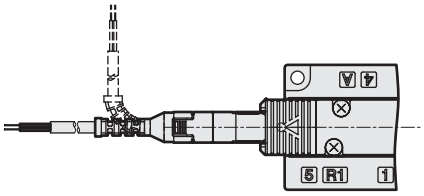

Note: Values in ( ) are applicable to AC voltages.

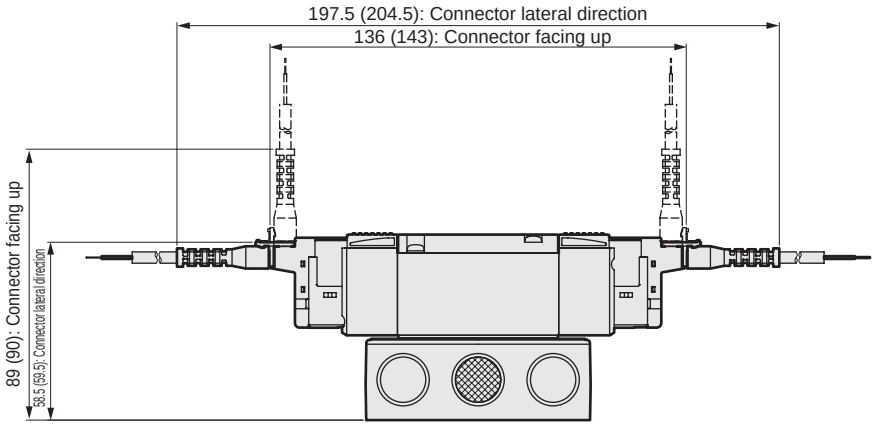

● DIN terminal box (B)

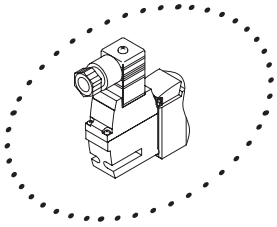

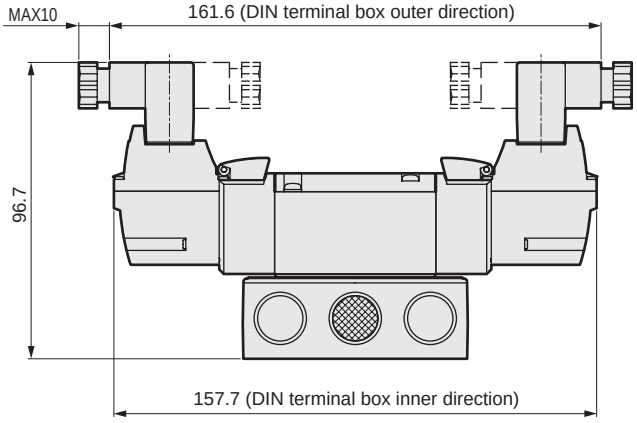

Note: The DIN terminal box assembly is shipped facing inward.

SCPD3
SCM
SSD2
MDC2
SMG
LCM
LCR
LCG
LCX
STM
STG
STR2
MRL2
GRC
Cylinder switch
MN3E MN4E
4GA/B
M4GA/B
MN4GA/B
F.R (module unit)
Clean F.R
Precision R
Press gauge Diff. press gauge
Electro-pneumatic R
Speed controller
Auxiliary valve
Fitting/ tube
Clean air unit
Pressure sensor
Flow rate sensor
Valve for air blow
Ending

Dimensions CAD

4GB3 $^{3}_{4}_{5}$0R-P7* * For the NPT thread and G thread specifications, refer to pages 494 to 503.

● 3 position grommet lead wire (blank)

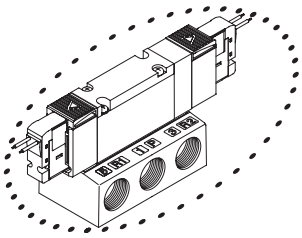

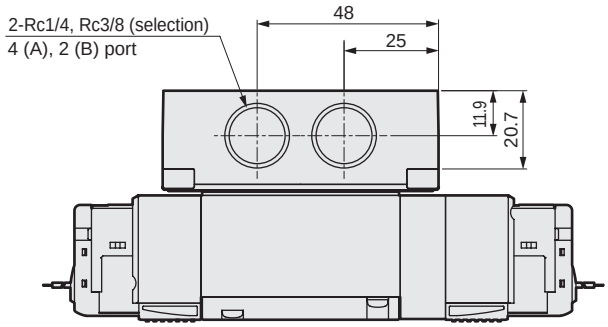

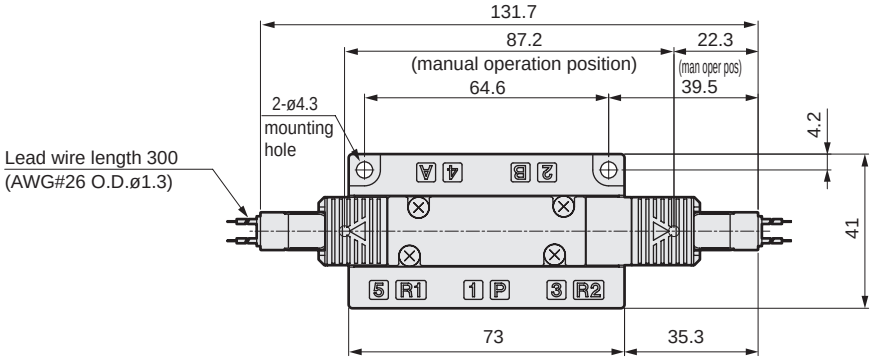

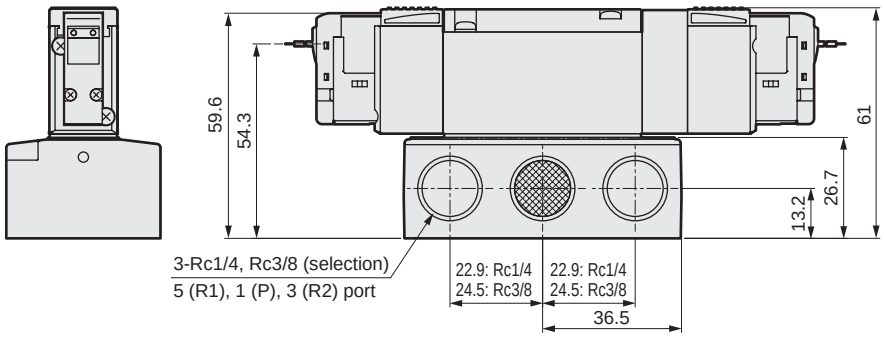

● External pilot (K)

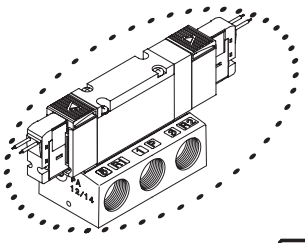

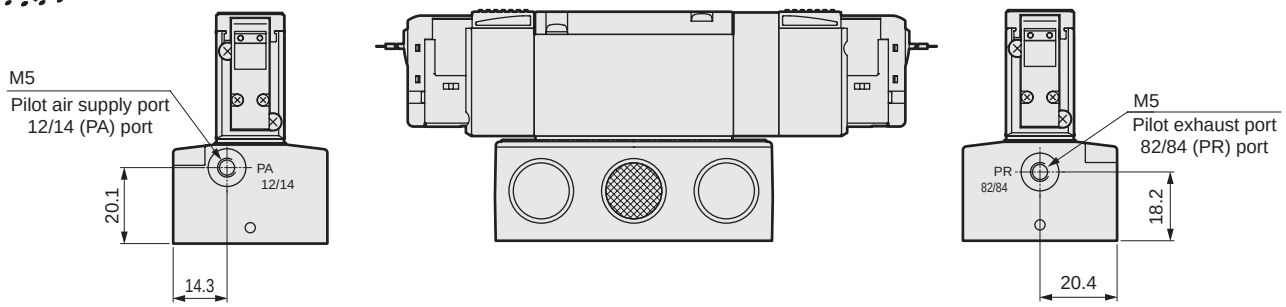

Dimensions

● E connector (E)

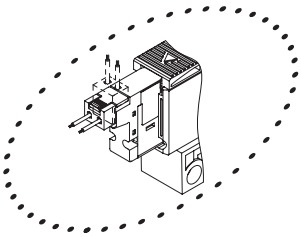

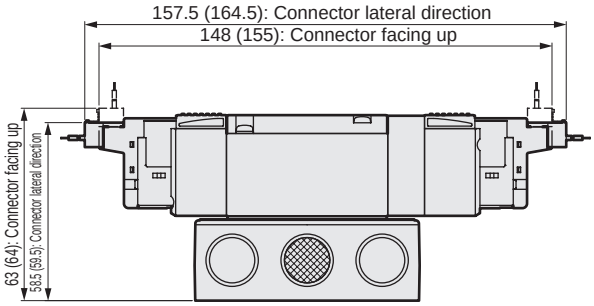

Note: Values in ( ) are applicable to AC voltages.

● EJ connector (E**J)

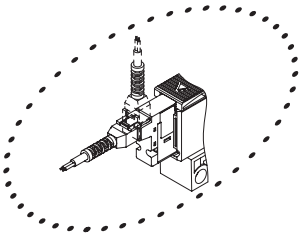

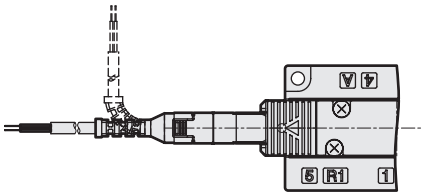

Note: Values in ( ) are applicable to AC voltages.

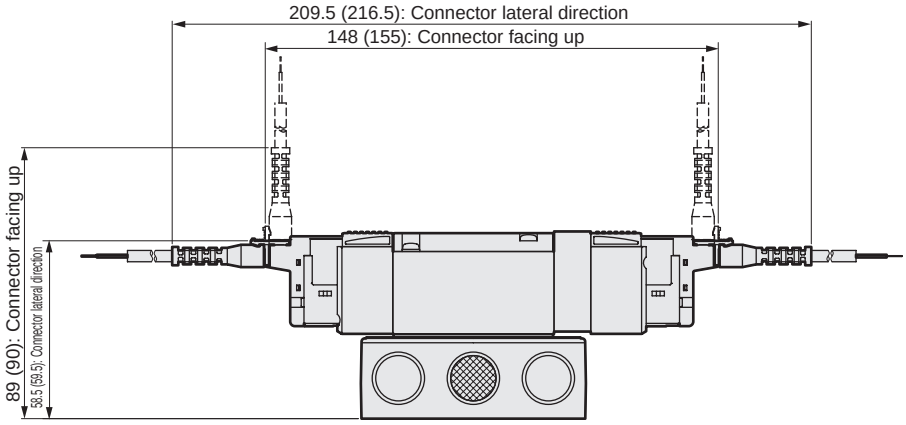

● DIN terminal box (B)

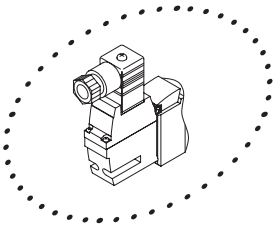

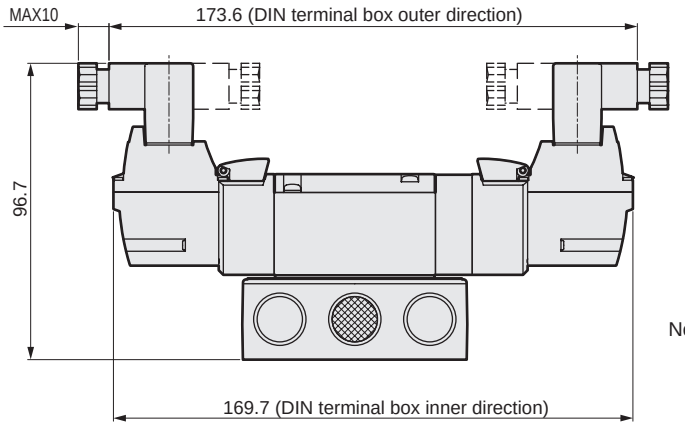

Note: The DIN terminal box assembly is shipped facing inward.

Dimensions Port size; NPT thread

3GB1$^{66}_{67}{}^{76}_{77}$0R-P7*, 4GB1$^{1}_{2}{}^{3}_{4}{}^{5}$0R-P7*

● 2-position single grommet lead wire (blank)

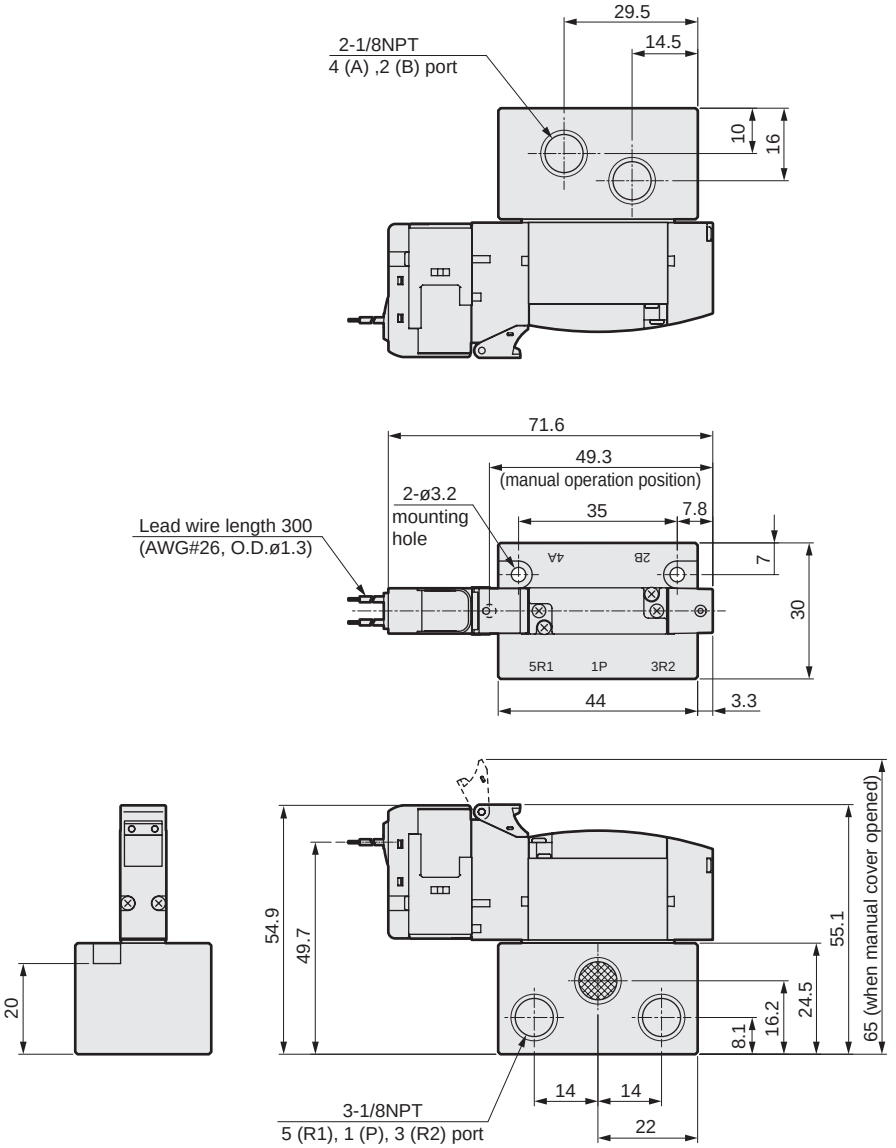

● External pilot (K)

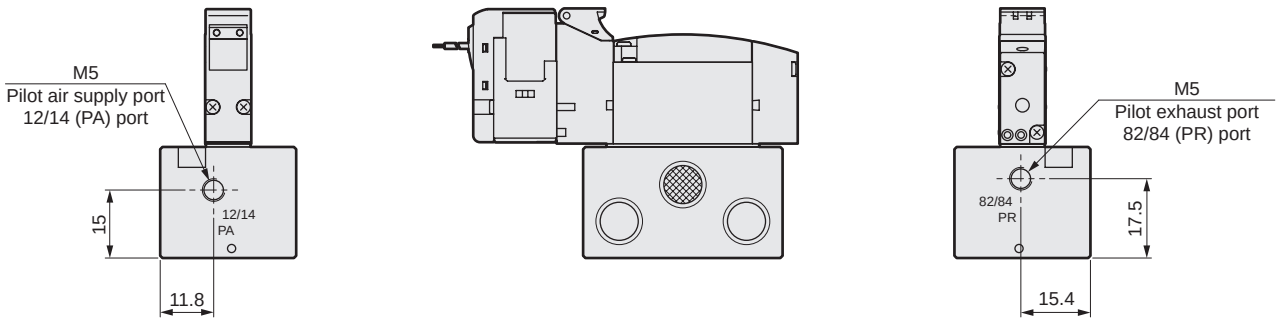

SCPD3
SCM
SSD2
MDC2
SMG
LCM
LCR
LCG
LCX
STM
STG
STR2
MRL2
GRC
Cylinder switch
MN3E MN4E
4GA/B
M4GA/B
MN4GA/B
F.R (module unit)
Clean F.R
Precision R
Press gauge Diff. press gauge
Electro-pneumatic R
Speed controller
Auxiliary valve
Fitting/ tube
Clean air unit
Pressure sensor
Flow rate sensor
Valve for air blow
Ending

Dimensions Port size; NPT thread

● E connector (E)

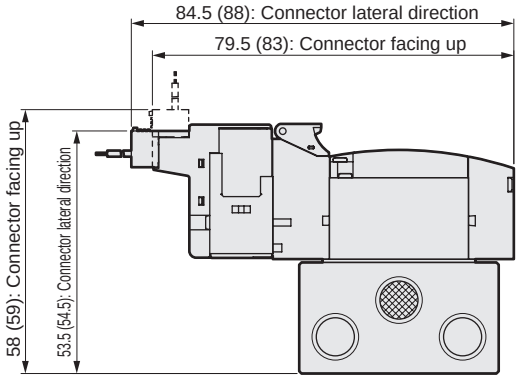

Note: Values in ( ) are applicable to AC voltages.

● EJ connector (E**J)

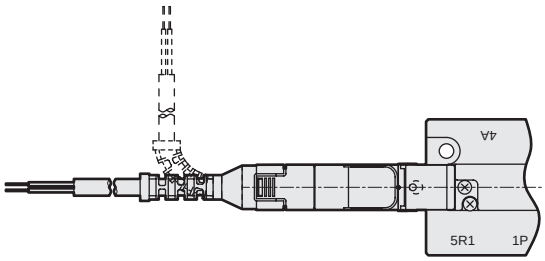

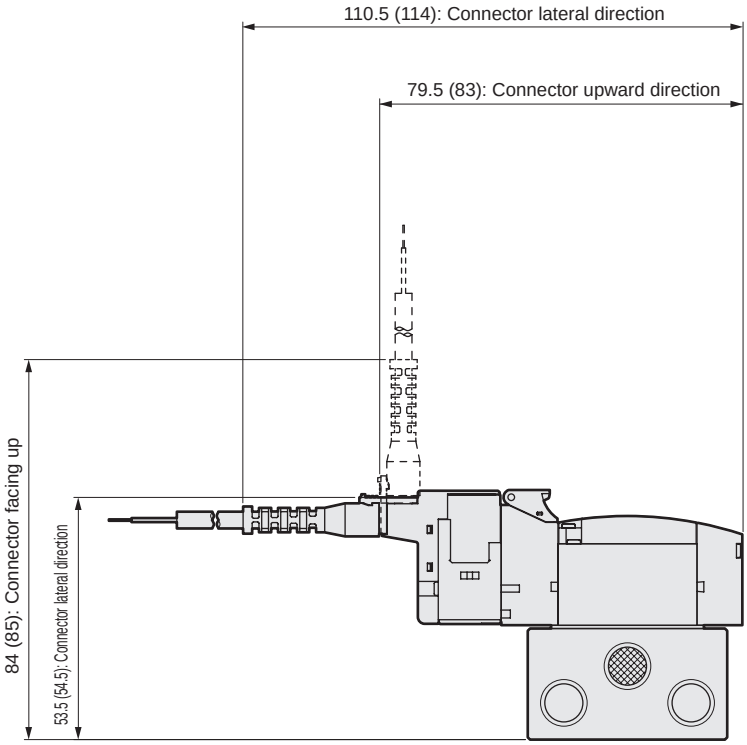

SCPD3
SCM
SSD2
MDC2
SMG
LCM
LCR
LCG
LCX
STM
STG
STR2
MRL2
GRC
Cylinder switch
MN3E MN4E
4GA/B
M4GA/B
MN4GA/B
F.R (module unit)
Clean F.R
Precision R
Press gauge Diff. press gauge
Electro-pneumatic R
Speed controller
Auxiliary valve
Fitting/ tube
Clean air unit
Pressure sensor
Flow rate sensor
Valve for air blow
Ending

Dimensions Port size; NPT thread

3GB2 66/67/76/77 0R-P7*, 4GB2 1/2/3/4/5 0R-P7*

● 2-position single grommet lead wire (blank)

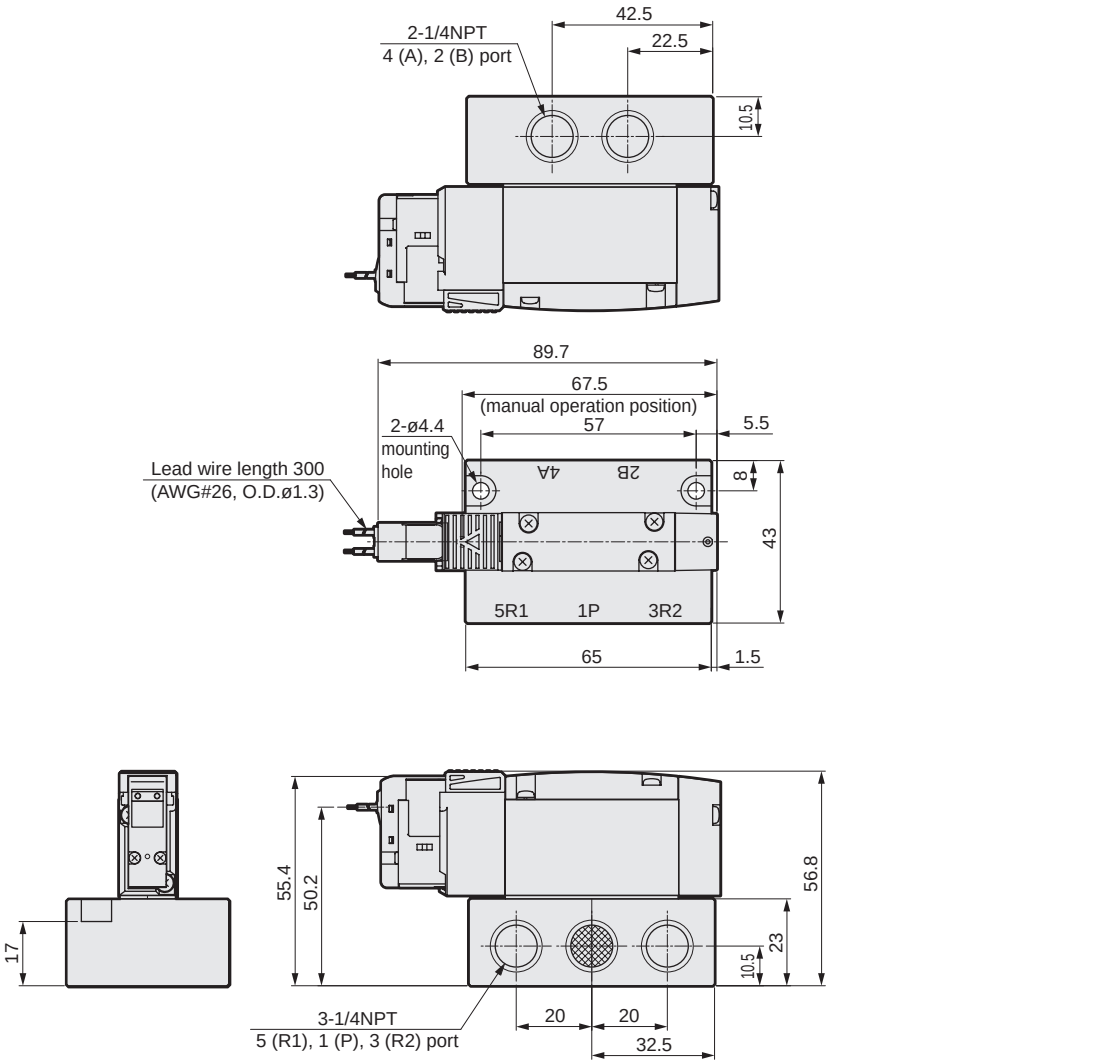

● External pilot (K)

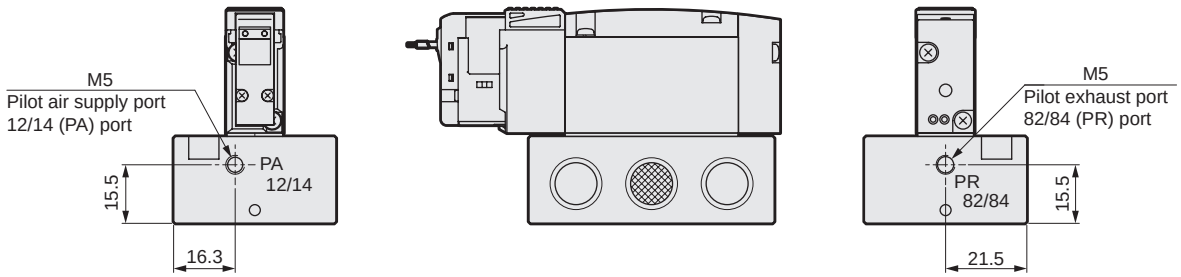

Dimensions Port size; NPT thread

● E connector (E)

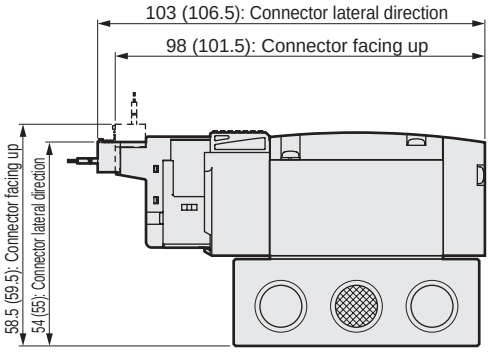

Note: Values in ( ) are applicable to AC voltages.

● EJ connector (E**J)

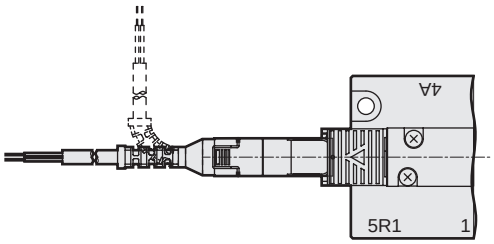

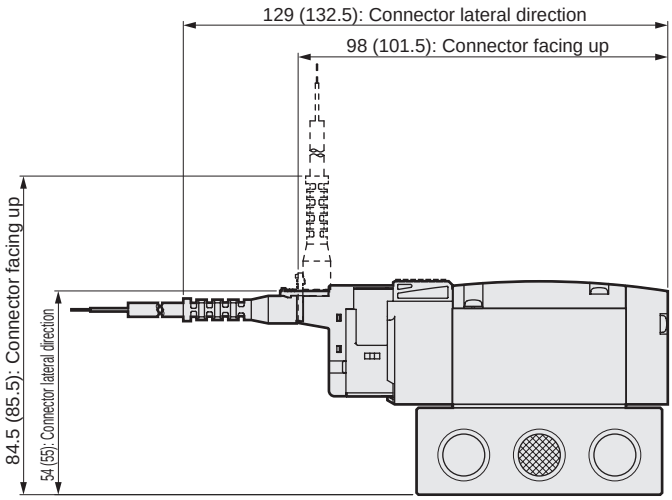

Note: Values in ( ) are applicable to AC voltages.

● DIN terminal box (B)

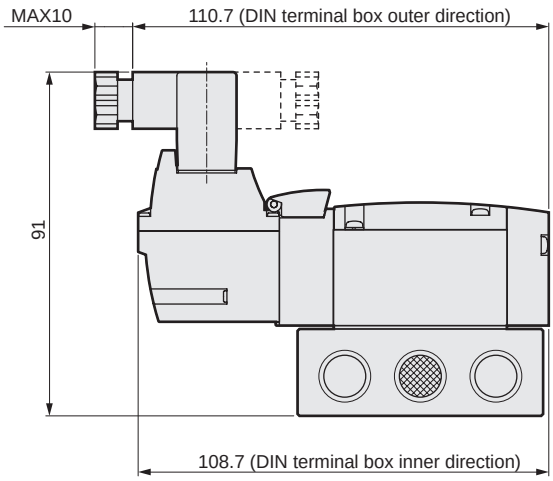

Note: The DIN terminal box assembly is shipped facing inward.

SCPD3
SCM
SSD2
MDC2
SMG
LCM
LCR
LCG
LCX
STM
STG
STR2
MRL2
GRC
Cylinder switch
MN3E MN4E
4GA/B
M4GA/B
MN4GA/B
F.R (module unit)
Clean F.R
Precision R
Press gauge Diff. press gauge
Electro-pneumatic R
Speed controller
Auxiliary valve
Fitting/ tube
Clean air unit
Pressure sensor
Flow rate sensor
Valve for air blow
Ending

Dimensions Port size; NPT thread

4GB3$^{1}_{2}_{3}_{4}_{5}$0R-P7*

● 2-position single grommet lead wire (blank)

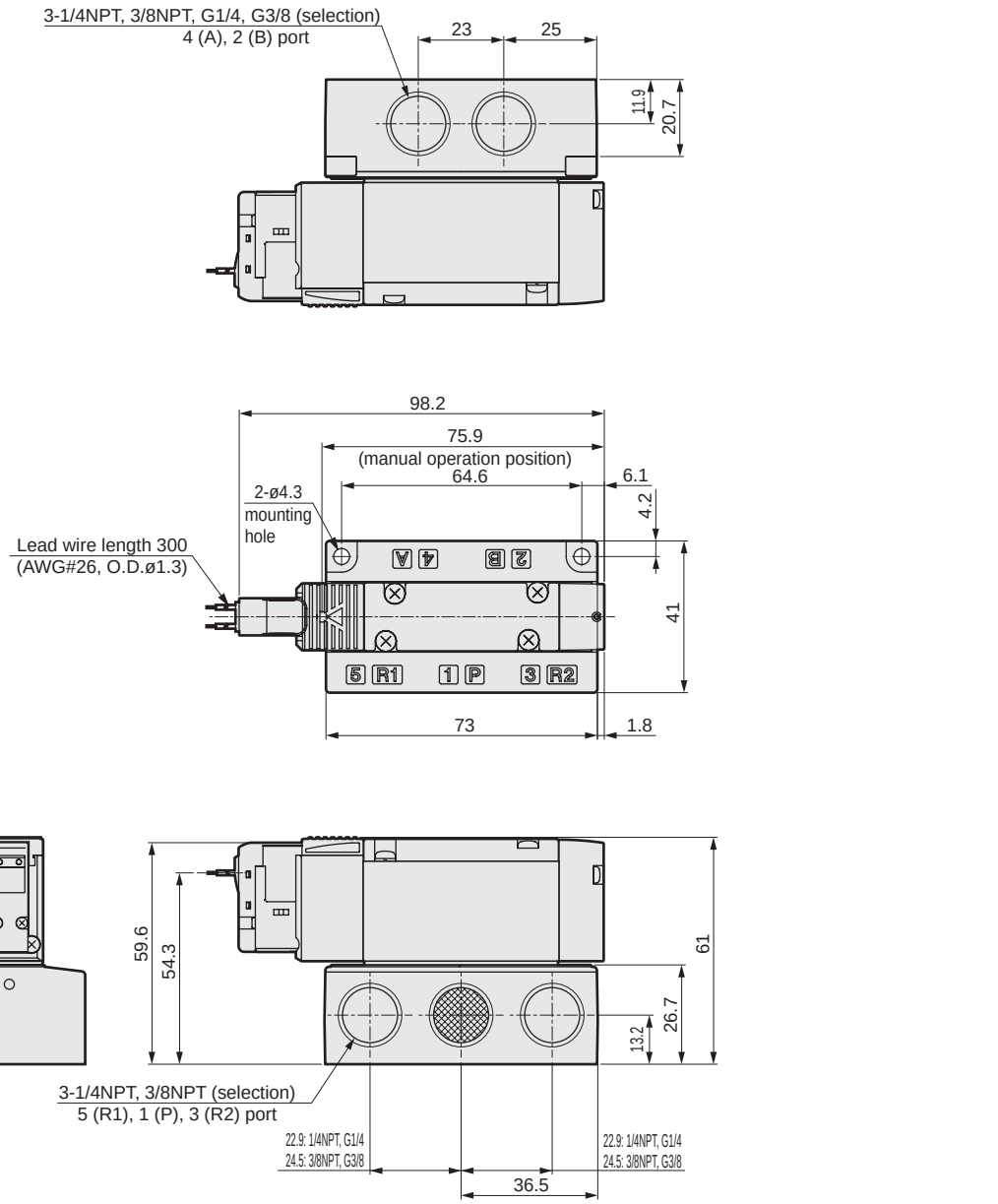

● External pilot (K)

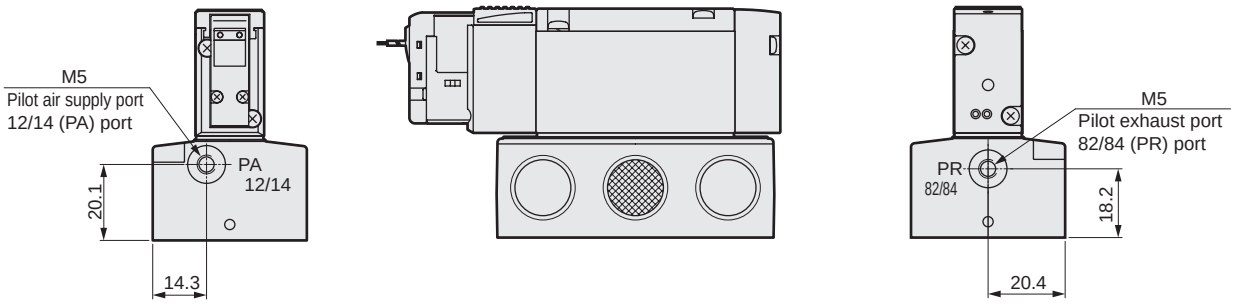

Dimensions Port size; NPT thread

● E connector (E)

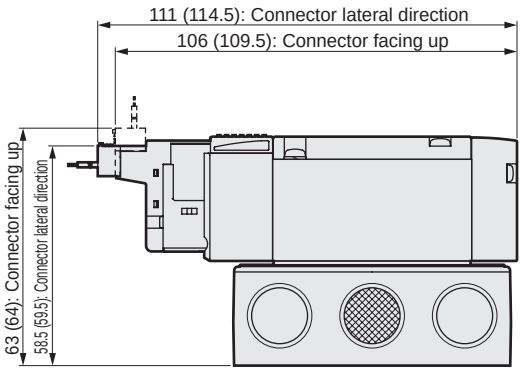

Note: Values in ( ) are applicable to AC voltages.

● EJ connector (E**J)

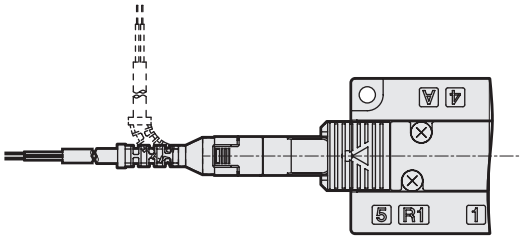

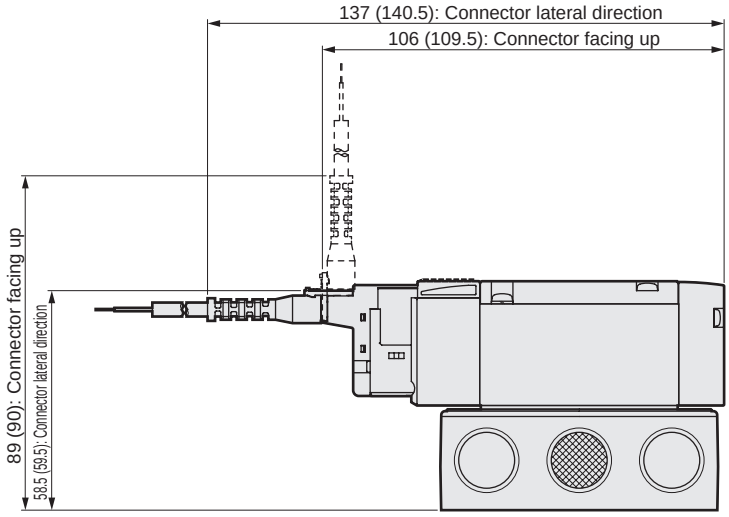

Note: Values in ( ) are applicable to AC voltages.

● DIN terminal box (B)

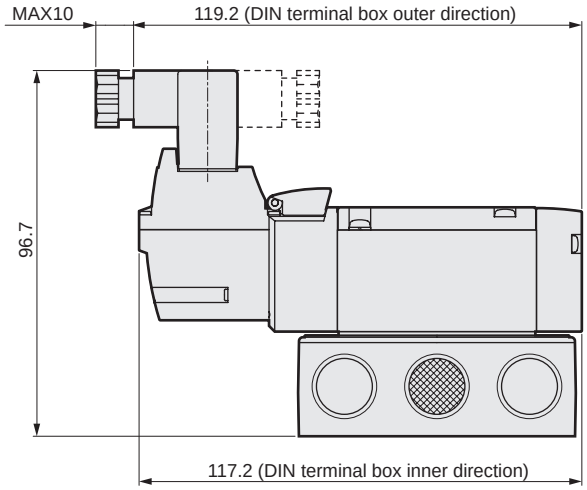

Note: The DIN terminal box assembly is shipped facing inward.

Dimensions Port size; G thread

3GB1$^{66}_{67}$$^{76}_{77}$0R-P7*, 4GB1$^{1}_{2}$$^{3}_{4}$^{5}0R-P7*

● 2-position single grommet lead wire (blank)

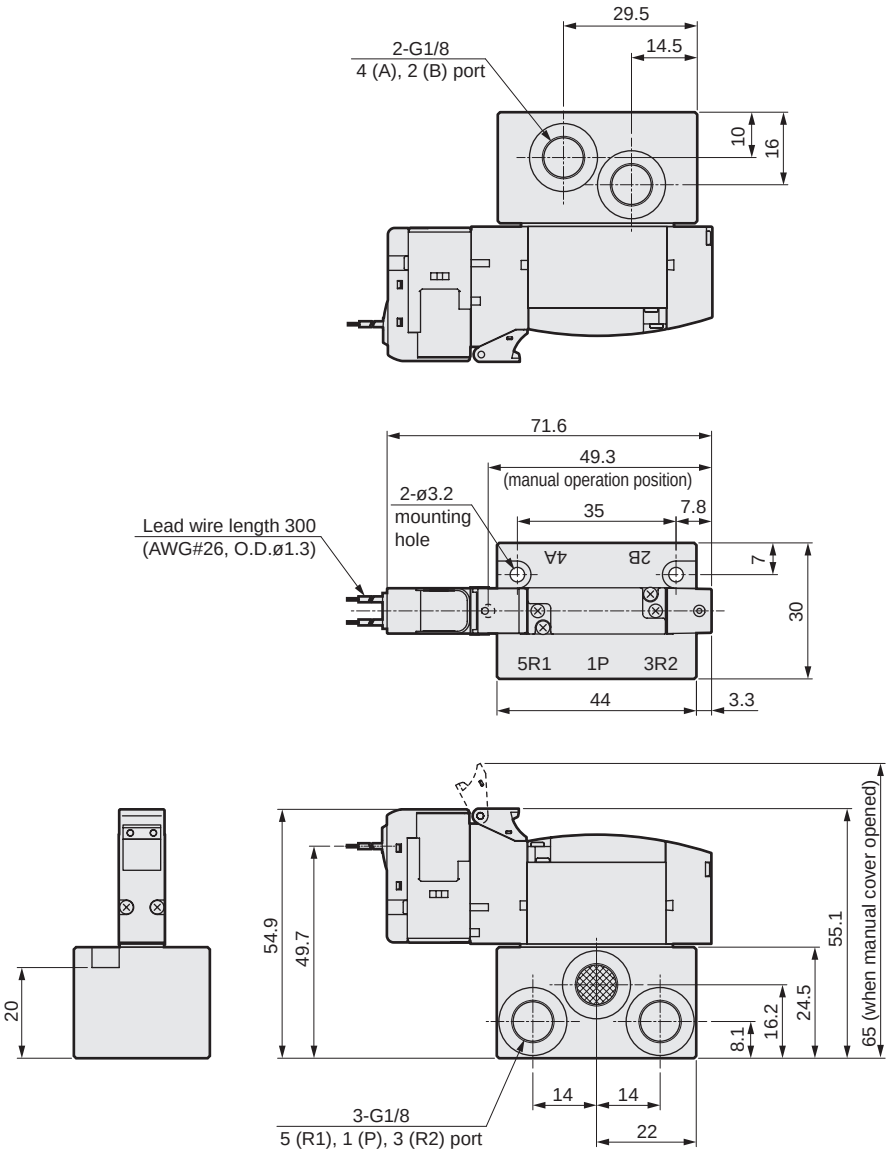

● External pilot (K)

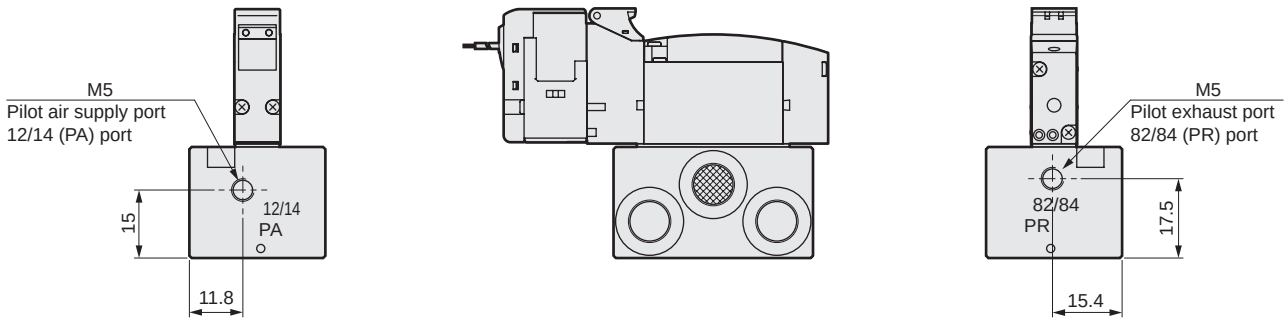

SCPD3
SCM
SSD2
MDC2
SMG
LCM
LCR
LCG
LCX
STM
STG
STR2
MRL2
GRC
Cylinder switch
MN3E MN4E
4GA/B
M4GA/B
MN4GA/B
F.R (module unit)
Clean F.R
Precision R
Press gauge Diff. press gauge
Electro-pneumatic R
Speed controller
Auxiliary valve
Fitting/ tube
Clean air unit
Pressure sensor
Flow rate sensor
Valve for air blow
Ending

Dimensions Port size; G thread

● E connector (E)

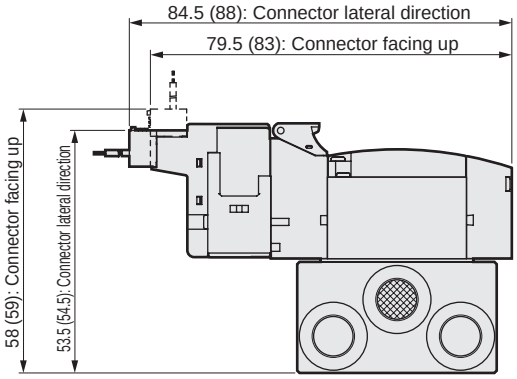

Note: Values in ( ) are applicable to AC voltages.

● EJ connector (E**J)

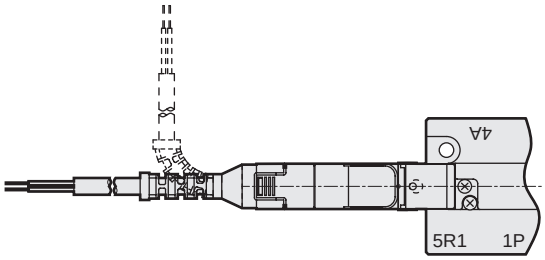

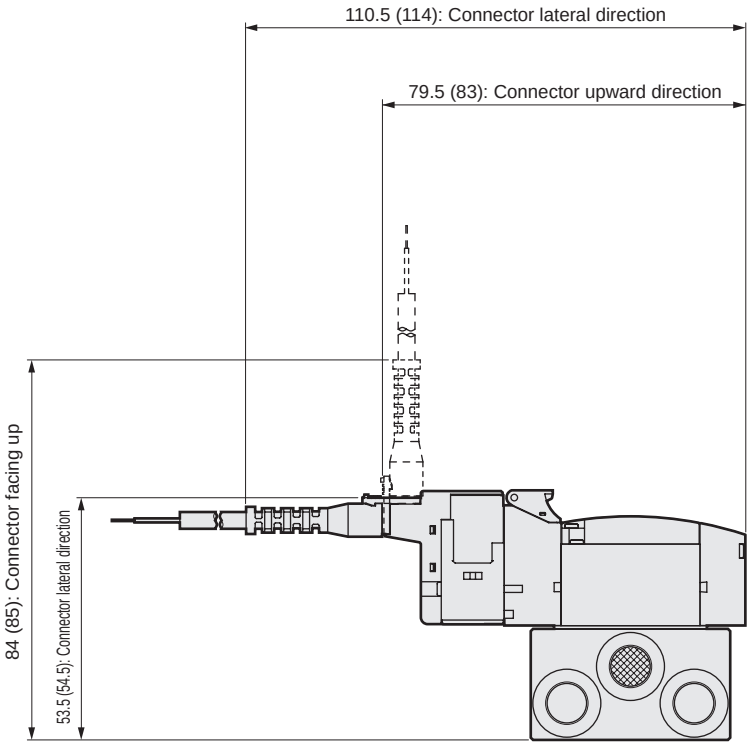

Note: Values in ( ) are for AC voltage.

SCPD3
SCM
SSD2
MDC2
SMG
LCM
LCR
LCG
LCX
STM
STG
STR2
MRL2
GRC
Cylinder switch
MN3E MN4E
4GA/B
M4GA/B
MN4GA/B
F.R (module unit)
Clean F.R
Precision R
Press gauge Diff. press gauge
Electro-pneumatic R
Speed controller
Auxiliary valve
Fitting/ tube
Clean air unit
Pressure sensor
Flow rate sensor
Valve for air blow
Ending

Dimensions Port size; G thread

3GB2$^{66}_{67}_{76}_{77}$0R-P7*, 4GB2$^{1}_{2}_{3}_{4}_{5}$0R-P7*

● 2-position single grommet lead wire (blank)

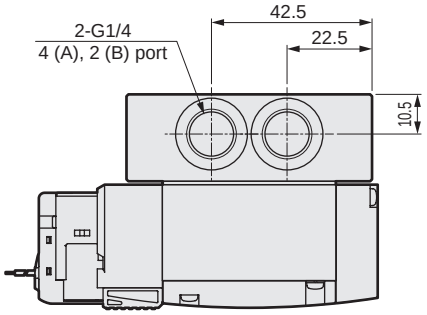

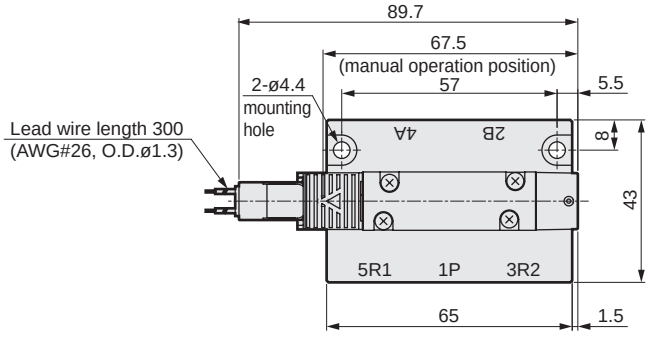

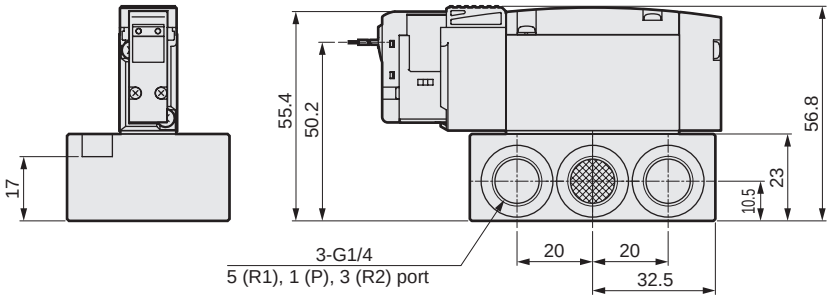

● External pilot (K)

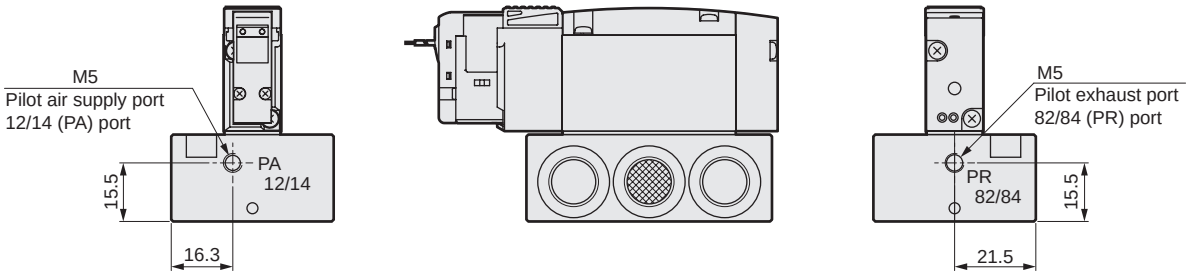

Dimensions Port size; G thread

● E connector (E)

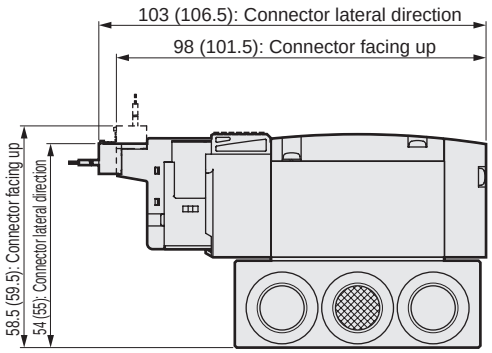

Note: Values in ( ) are applicable to AC voltages.

● EJ connector (E**J)

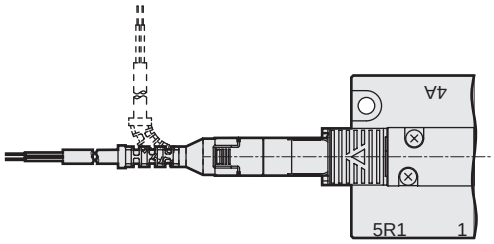

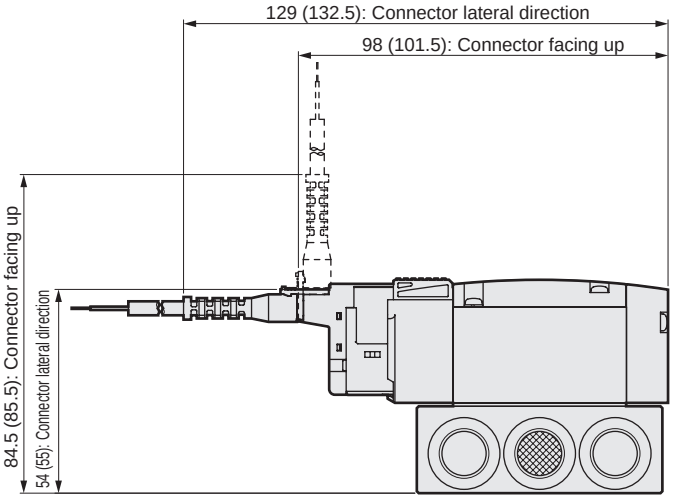

Note: Values in ( ) are applicable to AC voltages.

● DIN terminal box (B)

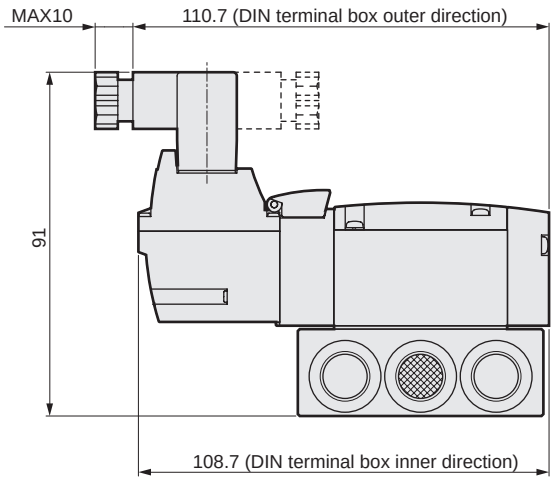

Note: The DIN terminal box assembly is shipped facing inward.

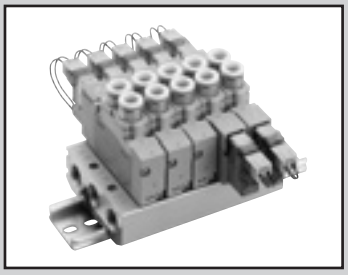

Individual wiring manifold
Body piping
Direct mount DIN rail mount

M3GA1, 2, 3-(D)/M4GA1, 2, 3-(D) Series

● Applicable cylinder bore size: ø20 to ø100

JIS symbol

● 3-port valve

2-position single NC

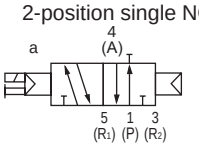

2-position single NO

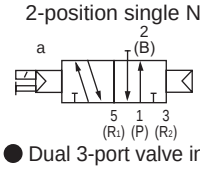

● Dual 3-port valve integrated

(A side valve: NC, B side valve: NC)

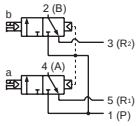

(A side valve: NC, B side valve: NO)

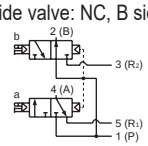

(A side valve: NO, B side valve: NC)

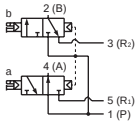

(A side valve: NO, B side valve: NO)

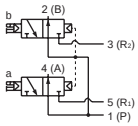

● 5-port valve

2-position single

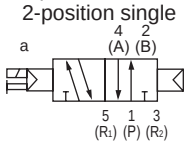

2-position double

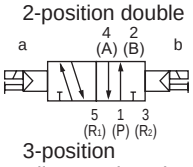

3-position
All ports closed

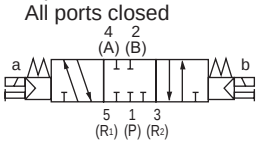

3-position A/B/R connection

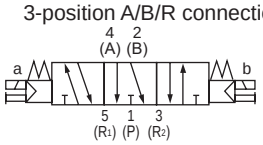

3 positions P/A/B connection

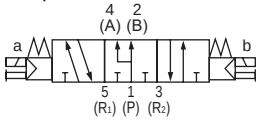

Structure and material restriction

	Structure	Material restriction			Model No.
P7 Series	Dust generation preventing				– P70
	Dust generation preventing	Copper-based materials prohibited	Silicon-based materials prohibited	Halogen-based materials prohibited (fluorine, chlorine, bromine)	– P74 Custom order product

Manifold common specifications

Item		Description
Manifold		Integrated base
Mounting method		Direct mount/DIN rail mount
Air supply and exhaust method		Common supply/common exhaust (With internal exhaust check valve)
Pilot exhaust method	Internal pilot	Main valve/pilot valve common exhaust (Pilot exhaust check valve built-in)
	External pilot	Main valve/pilot valve individual exhaust
Piping direction		Valve top direction
Valve and operation		Pilot operated soft spool valve
Working fluid		Compressed air
Max. working pressure MPa		0.7
Min. working pressure MPa		0.2 (*3)
Proof pressure MPa		1.05
Ambient temperature °C		-5 to 55 (no freezing)
Fluid temperature °C		5 to 55
Manual override		Non-locking/locking common (standard)
Lubrication (*1)		Not required
Degree of protection (*2)		Dust-proof
Vibration resistance m/s^2		50 or less
Shock resistance m/s^2		300 or less
Atmosphere		Cannot be used in corrosive gas environments

*1: Use turbine oil Class 1 ISO VG32 for lubrication. Excessive or intermittent lubrication results in unstable operation.
*2: Avoid water drops or oil, etc., during use. IP65 (water jet proof) applies for DIN terminal box specifications. However, the specified outer diameter of the cord and tightening torque must be used for fixing in place.
*3: The working pressure range is 0 to 0.7MPa when the external pilot (option code: K) is selected. Set the external pilot pressure between 0.2 and 0.7 MPa.

Electrical specifications

Item		Description					
Rated voltage V		24 VDC	12 VDC	5 VDC	3 VDC	100 VAC	200 VAC
Voltage fluctuation range		±10%					
Holding current A (*4)	Standard	0.015 (0.017)	0.030 (0.034)	0.072 (0.082)	0.120 (0.136)	0.009 (0.009)	0.006 (0.006)
	Low exoergic/energy-saving circuit built-in	0.005	0.010	-		-	
Power consumption W (*4)	Standard	0.35 (0.40)		0.35 (0.40)		-	
	Low exoergic/energy-saving circuit built-in	0.1		-		-	
Apparent power VA (*4) (*5)	Standard	-		-		0.93 (0.98)	1.40
Thermal class		B					
Surge suppressor		Option					
Indicator		Lamp (option)					

*4: Values in ( ) apply when with lamp option. A of low exoergic/energy-saving circuit built-in is only available with a lamp attached.
*5: The value for 200 VAC applies DIN terminal box (with lamp).

Individual specifications

Descriptions				M3GA1/M4GA1		M3GA2/M4GA2		M3GA3/M4GA3	
				Direct mount	DIN rail mount	Direct mount	DIN rail mount	Direct mount	DIN rail mount
Max. station number		Standard (Internal pilot)		20 stations	16 stations	20 stations	16 stations	20 stations	16 stations
		External pilot		12 stations	12 stations				
Port size	Rc thread, M5	A/B port		Barbed fitting ø1.8 Push-in fitting ø1.8, ø4, ø6 M5		Push-in fitting ø4, ø6, ø8 Rc1/8		Push-in fitting ø6, ø8, ø10 Rc1/4	
		P/R1/R2 port		Rc1/8		Rc1/4		Rc3/8	
	NPT thread, M5	A/B port		Push-in fitting ø1.8 inch, ø5/32 inch M5		Push-in fitting ø1/4 inch, ø5/16 inch 1/8NPT		Push-in fitting ø5/16 inch, ø3/8 inch 1/4NPT (*6)	
		P/R1/R2 port		1/8NPT		1/4NPT		3/8NPT (*6)	
	G thread, M5	A/B port		Push-in fitting ø4, ø6 M5		Push-in fitting ø4, ø6, ø8 G1/8		-	
		P/R1/R2 port		G1/8		G1/4		-	
Manifold base Weight calculation formula (n: station No.) g			Standard	23n + 52	25n + 60	47n + 64	49n + 92	74n + 88	76n + 117
			External pilot	36n + 105	38n + 113	88n + 135	90n + 163	136n + 194	138n + 223

*6: This is a custom order product.
Refer to "Cautions for Mounting the DIN Rail" (page 754), and select the manifold.
For 10 or over manifold station No. (5 stations for 4G3), use ports on both side for air supply and exhaust.
The manifold base weight is the value for screw specifications.

Performance/characteristics by model

Item			M3GA1		M3GA2		M3GA3		M4GA1		M4GA2		M4GA3	
			ON	OFF	ON	OFF	ON	OFF	ON	OFF	ON	OFF	ON	OFF
Response time ms	Two 3-port valves integrated		9	12	12	29	–	–	–	–	–	–	–	–
	2 position	Single	12	12	19	19	25	28	12	12	19	19	25	28
		Double	–	–	–	–	–	–	9	–	18	–	24	–
	3 position	ABR connection	–	–	–	–	–	–	8	15	17	30	23	45

Values with lamp/surge suppressor are shown. The response times are values with working pressure of 0.5 MPa at 20°C, without lubrication. They depend on the pressure and the lubricant quality.

Flow characteristics

Model No.	Solenoid position		P→A/B		A/B→R1/R2	
			C [dm³/(s·bar)]	b	C [dm³/(s·bar)]	b
M3GA1 M4GA1	Dual 3-port valve integrated		0.86	0.31	1.1 (0.66)	0.19 (0.22)
	2-position		0.99	0.20	1.2 (0.70)	0.20 (0.12)
	3-position	All ports closed	0.94	0.23	1.1 –	0.20 –
		ABR connection	0.93	0.18	1.3 (0.70)	0.23 (0.02)
		PAB connection	1.1	0.28	1.1 –	0.23 –
M3GA2 M4GA2	Dual 3-port valve integrated		1.7	0.40	2.3 (1.7)	0.29 (0.32)
	2-position		2.3	0.36	2.9 (1.7)	0.24 (0.33)
	3-position	All ports closed	2.1	0.35	2.5 –	0.32 –
		ABR connection	2.2	0.37	2.9 (1.8)	0.32 (0.29)
		PAB connection	2.4	0.34	2.5 –	0.33 –
M3GA3 M4GA3	2-position		3.2	0.37	3.8 (2.5)	0.13 (0.28)
	3-position	All ports closed	2.9	0.35	3.3 –	0.35 –
		ABR connection	3.0	0.34	3.8 (2.6)	0.12 (0.27)
		PAB connection	3.3	0.30	3.3 –	0.32 –

*1: Effective cross-sectional area S and sonic conductance C are converted as S ≈ 5.0 × C.
*2: Values in ( ) apply when the exhaust check valve attached.

Ozone proof specifications • Cutting oil prohibited specifications

This can be set by selecting option "A" of Ⓔ in how to order on page 507.

How to order

Manifold model No.

M 4GA1 1 0R - C6 - E2 H D - ○ - 3 - P70

3-port manifold model No.

M 3GA1 1 0R - C6 - E2 H D - ○ - 3 - P70

● Discrete valve for mounting base

4GA1 1 9R - C6 - E2 H —— 3 - P70

● Discrete 3-port valve for mounting base

3GA1 1 9R - C6 - E2 H —— 3 - P70

Ⓐ Model No.
Ⓑ Solenoid position
Ⓒ Port size
Ⓓ Electrical connections
Ⓔ Option
Ⓕ Mount
Ⓖ Station No.
Ⓗ Voltage
Ⓘ Clean room specifications

* Be sure to fill in the "manifold specifications" (pages 609 through 623).

Code	Content		Ⓐ Model No. 3GA1	3GA2	3GA3	4GA1	4GA2	4GA3
Ⓑ Solenoid position								
1	2-position single					●	●	●
2	2-position double					●	●	●
3	3-position all ports closed					●	●	●
4	3-position ABR connection					●	●	●
5	3-position P/A/B connection					●	●	●
1	2-position single normally closed	(*1)	●	●	●			
11	2-position single normally open	(*1)	●	●	●			
66	Dual 3-port valve integrated (*1, *2)	A side valve: Normally closed B side valve: Normally closed	●	●				
67		A side valve: Normally closed B side valve: Normally open	●	●				
76		A side valve: Normally open B side valve: Normally closed	●	●				
77		A side valve: Normally open B side valve: Normally open	●	●				
8	Mixed manifold (In case of multiple solenoid positions)		●	●	●	●	●	●

Port	4 (A)/2 (B) port		P/R1/R2 port (2)=Rc1/8 (3)=Rc1/4 (4)=Rc3/8					
Ⓒ Port size								
CF	ø1.8 barbed fitting (applicable tube UP-9102-**)		(2)			(2)		
C18	ø1.8 push-in fitting (applicable tube UP-9402-**)		(2)			(2)		
C4	ø4 push-in fitting		(2)	(3)		(2)	(3)	
C6	ø6 push-in fitting		(2)	(3)	(4)	(2)	(3)	(4)
C8	ø8 push-in fitting			(3)	(4)		(3)	(4)
C10	ø10 push-in fitting				(4)			(4)
CX	Push-in fitting mix	(*3)	(2)	(3)	(4)	(2)	(3)	(4)
M5	M5		(2)			(2)		
06	Rc1/8			(3)			(3)	
08	Rc1/4				(4)			(4)
Port	**4 (A)/2 (B) port**		**P/R1/R2 port (5)=1/8NPT (3)=1/4NPT (4)=3/8NPT**					
C3N	ø1/8 inch push-in fitting		(5)			(5)		
C4N	ø5/32 inch push-in fitting		(5)			(5)		
C6N	ø1/4 inch push-in fitting			(6)			(6)	
C8N	ø5/16 inch push-in fitting			(6)	(7)		(6)	(7)
C10N	ø3/8 inch push-in fitting				(7)			(7)
CXN	Push-in fitting mix	(*3)	(5)	(6)	(7)	(5)	(6)	(7)
M5N	M5		(5)			(5)		
06N	1/8NPT			(6)			(6)	
08N	1/4NPT	(*4)			(7)			(7)
Port	**4 (A)/2 (B) port**		**P/R1/R2 port (8)=G1/8 (9)=G1/4**					
C4G	ø4 push-in fitting		(8)	(9)		(8)	(9)	
C6G	ø6 push-in fitting		(8)	(9)		(8)	(9)	
C8G	ø8 push-in fitting			(9)	(10)		(9)	(10)
C10G	ø10 push-in fitting				(10)			(10)
CXG	Push-in fitting mix	(*3)	(8)	(9)	(10)	(8)	(9)	(10)
M5G	M5		(8)			(8)		
06G	G1/8			(9)			(9)	
08G	G1/4				(10)			(10)

⚠ Precautions for model No. selection

*1: Select M4GA*80R when mixing with the 3, 5-port valves. Select M3GA*80R when mixing with the masking plate.
*2: Combination with the external pilot (K) is not available. Dimensions are the same as the respective 2-position double solenoid.
*3: The push-in fitting cannot be mixed with the discrete valve's 4 (A) or 2 (B) port.
*4: Custom order product.

		Ⓐ Model No.					
		3GA1	3GA2	3GA3	4GA1	4GA2	4GA3
Ⓓ Electrical connections							
Blank	Grommet lead wire (300 mm) (*12)	●	●	●	●	●	●
B	DIN terminal box (Pg7) with surge suppressor/lamp (*13)(*15)		●	●		●	●
BN	DIN terminal box (Pg7) (no terminal box) with surge suppressor (*13)(*15)		●	●		●	●
E connector (up/lateral common)							
E0	Lead wire (300 mm) (*14)	●	●	●	●	●	●
E00	Lead wire (500 mm) (*14)	●	●	●	●	●	●
E01	Lead wire (1000 mm) (*14)	●	●	●	●	●	●
E02	Lead wire (2000 mm) (*14)	●	●	●	●	●	●
E03	Lead wire (3000 mm) (*14)	●	●	●	●	●	●
E0N	Without lead wire (without socket) (*14)	●	●	●	●	●	●
E1	Without lead wire (with socket/terminal) (*14)	●	●	●	●	●	●
E2	Lead wire (300 mm) with surge suppressor/lamp	●	●	●	●	●	●
E20	Lead wire (500 mm) with surge suppressor/lamp	●	●	●	●	●	●
E21	Lead wire (1000 mm) with surge suppressor/lamp	●	●	●	●	●	●
E22	Lead wire (2000 mm) with surge suppressor/lamp	●	●	●	●	●	●
E23	Lead wire (3000 mm) with surge suppressor/lamp	●	●	●	●	●	●
E2N	Without lead wire (without socket) with surge suppressor/lamp	●	●	●	●	●	●
E3	Without lead wire (with socket/terminal) with surge suppressor/lamp	●	●	●	●	●	●
EJ connector (socket with cover, up/lateral common)							
E01J	Lead wire (1000 mm) (*14)	●	●	●	●	●	●
E02J	Lead wire (2000 mm) (*14)	●	●	●	●	●	●
E03J	Lead wire (3000 mm) (*14)	●	●	●	●	●	●
E21J	Lead wire (1000 mm) with surge suppressor/lamp	●	●	●	●	●	●
E22J	Lead wire (2000 mm) with surge suppressor/lamp	●	●	●	●	●	●
E23J	Lead wire (3000 mm) with surge suppressor/lamp	●	●	●	●	●	●
Ⓔ Option							
Blank	Non-locking and locking model shared manual override	●	●	●	●	●	●
M	Non-locking manual override	●	●	●	●	●	●
H	With exhaust check valve (*5)	●	●	●	●	●	●
K	External pilot (*6)	●	●	●	●	●	●
A	Ozone/cutting oil compatible	●	●	●	●	●	●
S	Surgeless (*7)	●	●	●	●	●	●
E	Low exoergic/energy-saving circuit (*7) (*8)	●	●	●	●	●	●
F	Built-in A/B port filter (*9)	●	●	●	●	●	●
Z1	Air supply spacer (*10)	●	●	●	●	●	●
Z3	Exhaust spacer (*10)	●	●	●	●	●	●
Ⓕ Mount							
Blank	Direct mount	●	●	●	●	●	●
D	DIN rail mount	●	●	●	●	●	●
Ⓖ Station No.							
2 to 20	2 stations to 20 — Refer to page 505 for the maximum station number for each model.	●	●	●	●	●	●
Ⓗ Voltage							
1	100 VAC (with rectifier circuit)	●	●	●	●	●	●
2	200 VAC (with rectifier circuit) (*11)		●	●		●	●
3	24 VDC	●	●	●	●	●	●
4	12 VDC	●	●	●	●	●	●
7	3 VDC	○	○	○	○	○	○
8	5 VDC	○	○	○	○	○	○

Ⓘ Clean room specifications (*15, 16, 17)

	Structure	Material restriction						
P70	Exhaust treatment	-	●	●	●	●	●	●
P74	Exhaust treatment	Copper-/silicon-/halogen-based materials (fluorine, chlorine, bromine) are prohibited.	○	○	○	○	○	○

is not available.

○ Custom order products. Contact CKD for details.

***5: 3-position all ports closed and P/A/B connection are not provided with the exhaust check valve (H).**
Refer to page 751 for details on the exhaust check.
*6: Contact CKD when using a vacuum with the external pilot (K).
7: Only E2 and E2*J connectors and 12/24 VDC are supported.
In addition, selecting a combination of surgeless "S" and the low exoergic/energy-saving circuit "E" is not allowed.

Electrical connections

Discrete valve/individual wiring manifold

Blank Grommet lead wire

● **Lead wire length**
300 mm

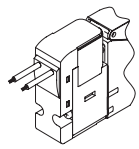

E1 E3 E connector with socket/terminal

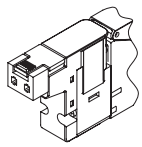

E0 E2 E connector

● **Lead wire length**
300 mm
500 mm
1000 mm
2000 mm
3000 mm

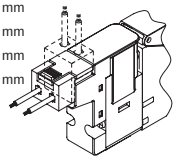

B DIN terminal box

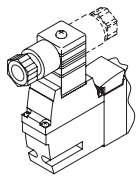

E0N E2N E connector without socket

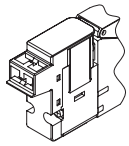

BN DIN terminal box (no terminal box)

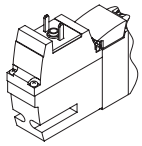

E0*J E2*J EJ connector

● **Lead wire length**
1 m
2 m
3 m

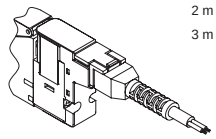

*8: Applicable to surgeless specifications
*9: P port is equipped with a filter as standard.
***10: The mounting position and the quantity of spacers should be specified in the manifold specifications of each catalog. Stacking multiple spacers is not supported. Combination with the masking plate is not supported. Refer to pages 592 to 595 for details.**
*11: Supported only for the DIN terminal box.
*12: The grommet lead wire specifications are only applicable to DC voltages.
*13: AC voltage and 12/24 VDC are supported. The lamp is incorporated in the terminal box.
*14: AC voltage is provided with a rectifier circuit.
*15: The terminal box is a EN175301-803Type C (old DIN 43650-C) compliant product. Refer to page 756 for details.
*16: A (ozone compatible) and Ⓘ clean room specifications P74 cannot be combined.
*17: Copper-, silicon-, and halogen-free specifications are available as main valve part support.
*18: P74 Series is a custom order product.

SCPD3
SCM
SSD2
MDC2
SMG
LCM
LCR
LCG
LCX
STM
STG
STR2
MRL2
GRC
Cylinder switch
MN3E MN4E
4GA/B
M4GA/B
MN4GA/B
F.R (module unit)
Clean F.R
Precision R
Press gauge Diff. press gauge
Electro-pneumatic R
Speed controller
Auxiliary valve
Fitting/ tube
Clean air unit
Pressure sensor
Flow rate sensor
Valve for air blow
Ending

Dimensions CAD

M4GA1-P7*

● Grommet lead wire (blank)

* For 2-position single 3-port valve, port A or port B is a plug. In addition, the dual 3-port valve integrated has the same dimensions as the double model.
* Refer to page 755 for details on mounting holes.

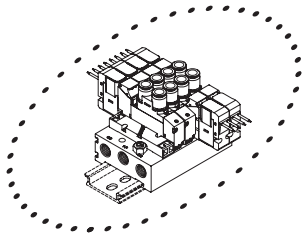

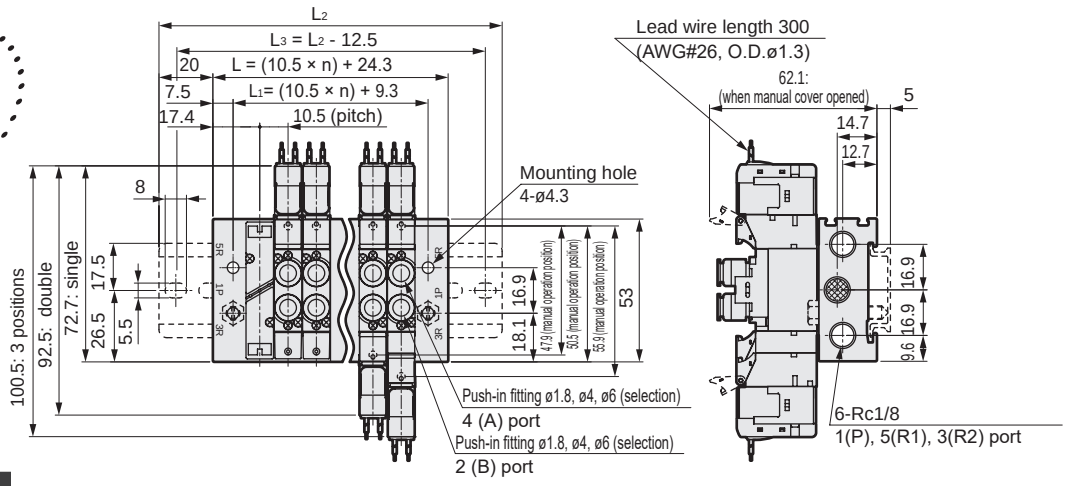

Push-in fitting bore size	*Dimensions
ø1.8	54
ø4	58
ø6	59.2
ø1/8 inch	58.5
ø5/32 inch	58

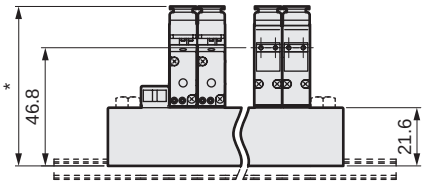

● ø1.8 barbed fitting (CF)

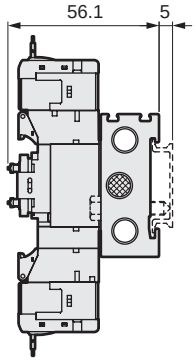

● M5 female thread (M5)

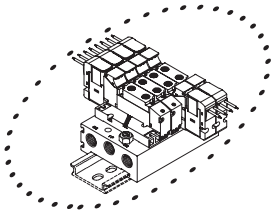

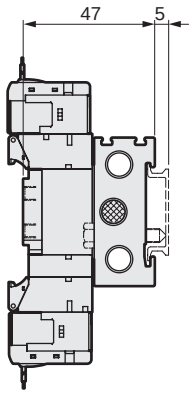

● E connector (E)

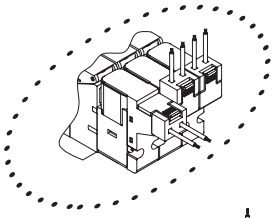

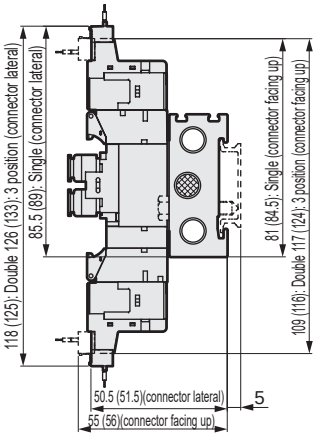

● EJ connector (E ** J)

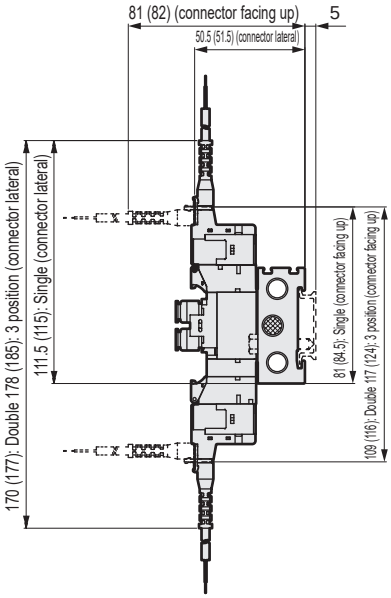

Note: Values in ( ) are applicable to AC voltages.

Station No.	2	3	4	5	6	7	8	9	10	11	12	13	14	15	16	17	18	19	20
L	45.3	55.8	66.3	76.8	87.3	97.8	108.3	118.8	129.3	139.8	150.3	160.8	171.3	181.8	192.3	202.8	213.3	223.8	234.3
L1	30.3	40.8	51.3	61.8	72.3	82.8	93.3	103.8	114.3	124.8	135.3	145.8	156.3	166.8	177.3	187.8	198.3	208.8	219.3
L2	87.5	100.0	112.5	125.0	137.5	150.0	150.0	162.5	175.0	187.5	200.0	212.5	212.5	225.0	237.5				
L3	75.0	87.5	100.0	112.5	125.0	137.5	137.5	150.0	162.5	175.0	187.5	200.0	200.0	212.5	225.0				

Dimensions

M4GA1-P7*

* For 2-position single 3-port valve, port A or port B is a plug.
* Refer to page 755 for details on mounting holes.

● External pilot (K)
Grommet lead wire (blank)

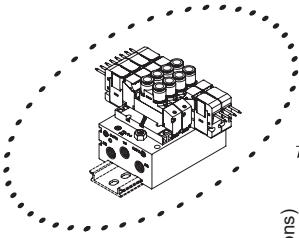

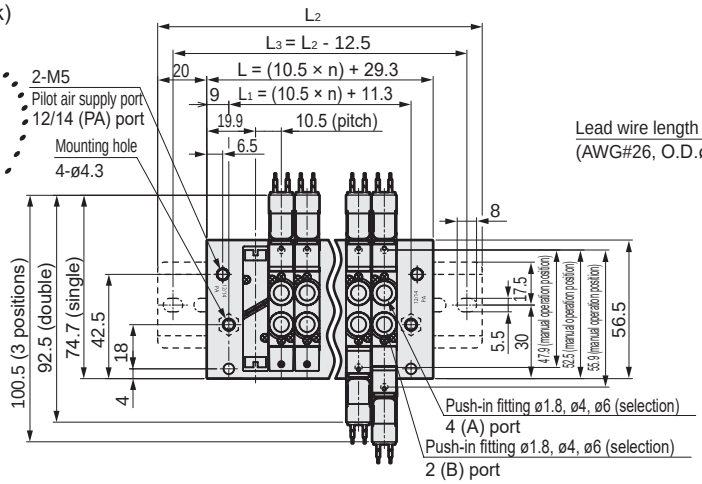

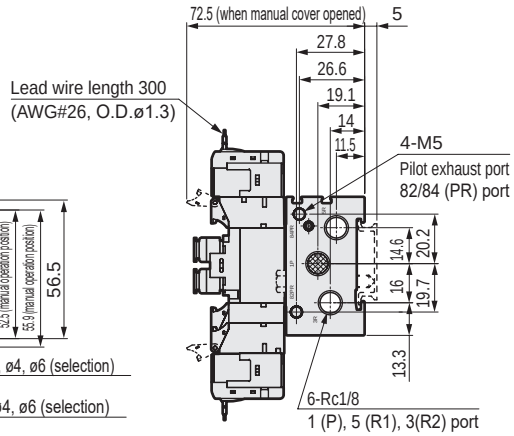

Push-in fitting bore size	*Dimensions
ø1.8	64.4
ø4	68.4
ø6	69.6
ø1/8 inch	68.9
ø5/32 inch	68.4

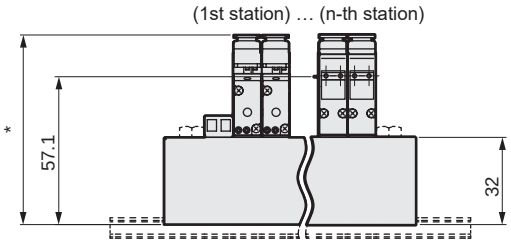

● ø1.8 barbed fitting (CF)

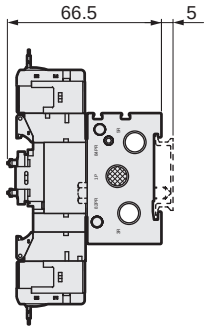

● External pilot (K)
M5 female thread (M5)

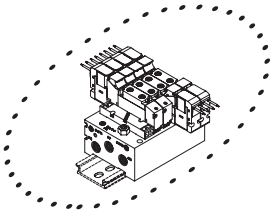

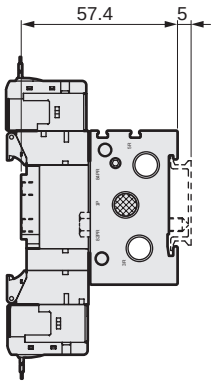

● External pilot (K)
E connector E

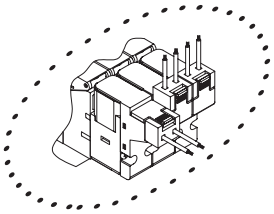

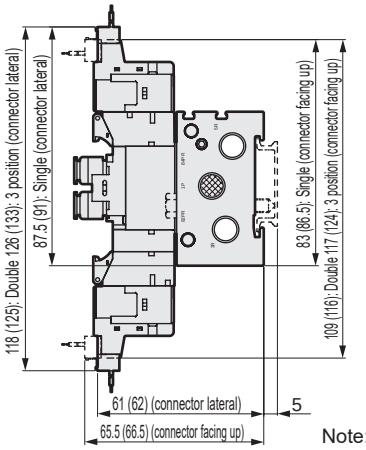

● External pilot (K)
EJ connector (E**J)

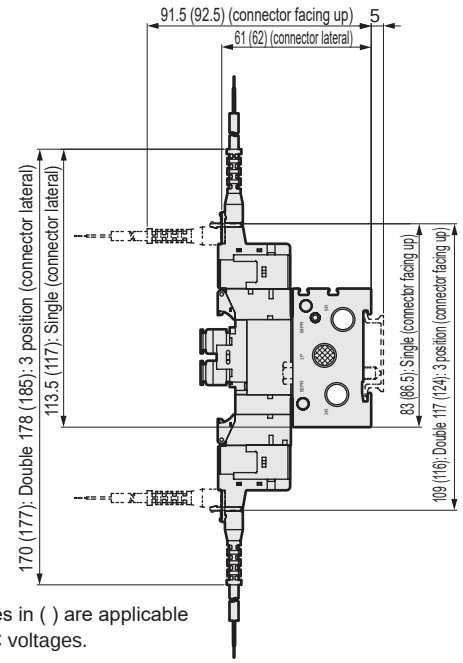

Note: Values in ( ) are applicable to AC voltages.

Station No.	2	3	4	5	6	7	8	9	10	11	12
L	50.3	60.8	71.3	81.8	92.3	102.8	113.3	123.8	134.3	144.8	155.3
L1	32.3	42.8	53.3	63.8	74.3	84.8	95.3	105.8	116.3	126.8	137.3
L2	100.0	112.5	112.5	125.0	137.5	150.0	162.5	175.0	175.0	187.5	200.0
L3	87.5	100.0	100.0	112.5	125.0	137.5	150.0	162.5	162.5	175.0	187.5

SCPD3
SCM
SSD2
MDC2
SMG
LCM
LCR
LCG
LCX
STM
STG
STR2
MRL2
GRC
Cylinder switch
MN3E MN4E
4GA/B
M4GA/B
MN4GA/B
F.R (module unit)
Clean F.R
Precision R
Press gauge Diff. press gauge
Electro-pneumatic R
Speed controller
Auxiliary valve
Fitting/ tube
Clean air unit
Pressure sensor
Flow rate sensor
Valve for air blow
Ending

Dimensions CAD

M4GA2-P7*

● Grommet lead wire (blank)

* For 2-position single 3-port valve, port A or port B is a plug. In addition, the dual 3-port valve integrated has the same dimensions as the double model.
* Refer to page 754 for details on mounting holes.

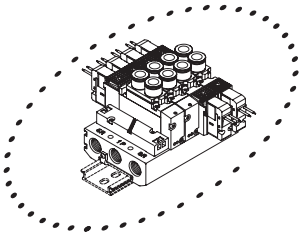

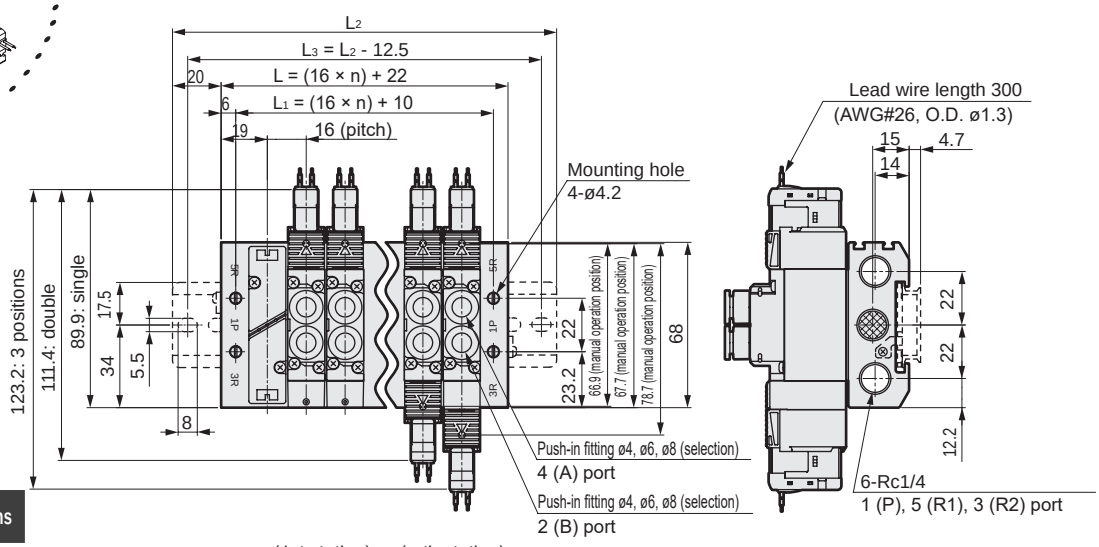

Push-in fitting bore size	*1 Dimensions
ø4	76
ø6	
ø8	
ø1/4 inch	76.9
ø5/16 inch	76.2

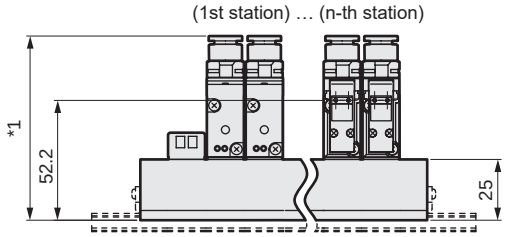

● Rc1/8 female thread (06)

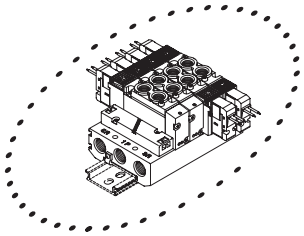

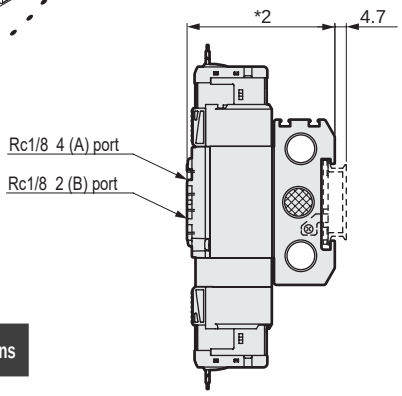

Female thread size	*2 Dimensions
Rc1/8	60.8
1/8NPT	62.1
G1/8	

● E connector (E)

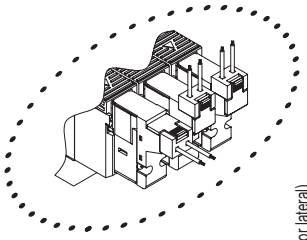

Note: Values in ( ) are applicable to AC voltages.

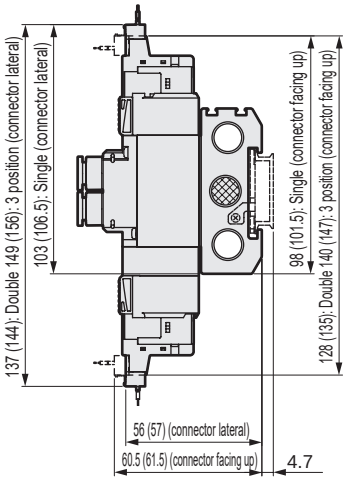

Station No.	2	3	4	5	6	7	8	9	10	11	12	13	14	15	16	17	18	19	20
L	54.0	70.0	86.0	102.0	118.0	134.0	150.0	166.0	182.0	198.0	214.0	230.0	246.0	262.0	278.0	294.0	310.0	326.0	342.0
L1	42.0	58.0	74.0	90.0	106.0	122.0	138.0	154.0	170.0	186.0	202.0	218.0	234.0	250.0	266.0	282.0	298.0	314.0	330.0
L2	100.0	112.5	137.5	150.0	162.5	175.0	200.0	212.5	225.0	250.0	262.5	275.0	287.5	312.5	325.0				
L3	87.5	100.0	125.0	137.5	150.0	162.5	187.5	200.0	212.5	237.5	250.0	262.5	275.0	300.0	312.5				

Dimensions

● EJ connector (E**J)

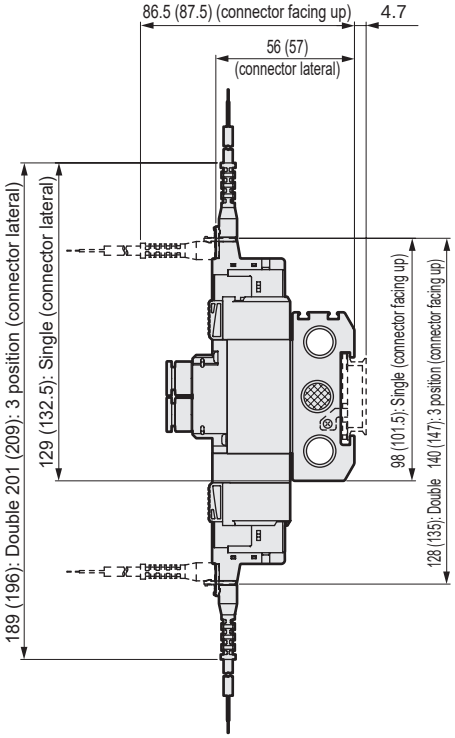

Note: Values in ( ) are applicable to AC voltages.

● DIN terminal box (B)

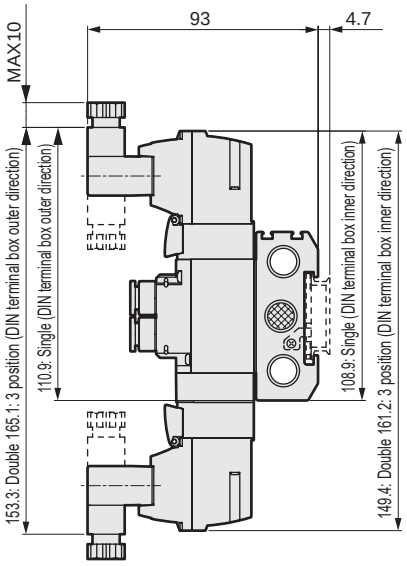

Note: The DIN terminal box assembly is shipped facing inward.

Dimensions CAD

M4GA2-P7*

● External pilot (K)
Grommet lead wire (blank)

* For 2-position single 3-port valve, port A or port B is a plug.
* Refer to page 754 for details on mounting holes.

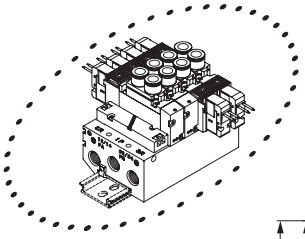

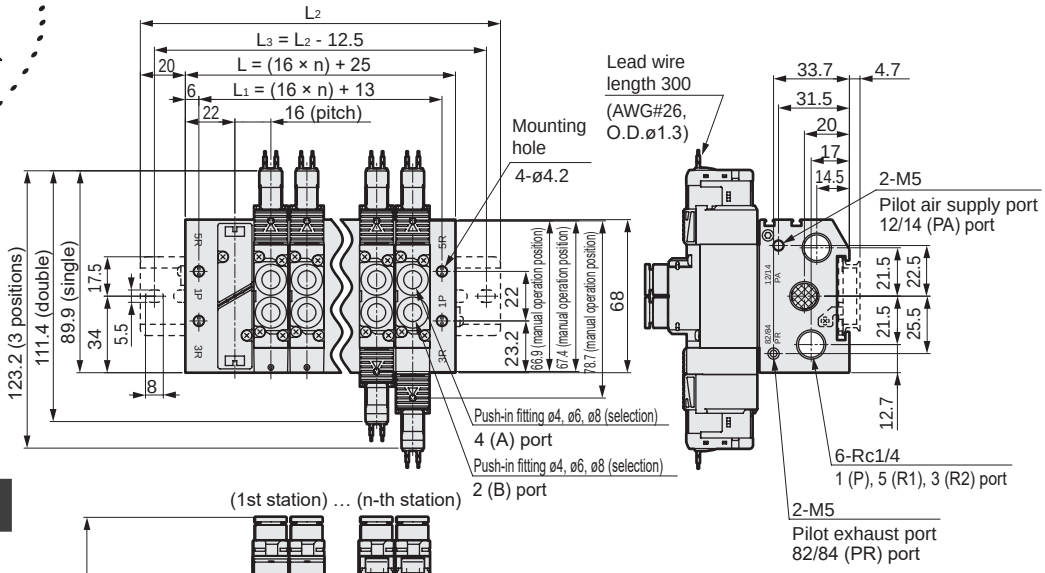

Push-in fitting bore size	*1 Dimensions
ø4	91
ø6	
ø8	
ø1/4 inch	91.9
ø5/16 inch	91.2

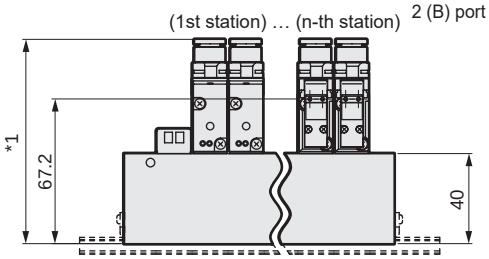

● External pilot (K)
Rc1/8 female thread (06)

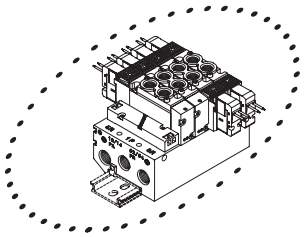

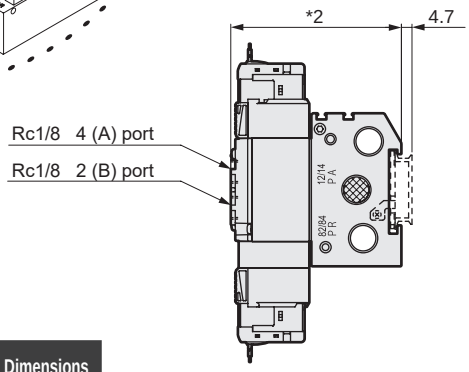

Female thread size	*2 Dimensions
Rc1/8	75.8
1/8NPT	77.1
G1/8	

● External pilot (K)
E connector E

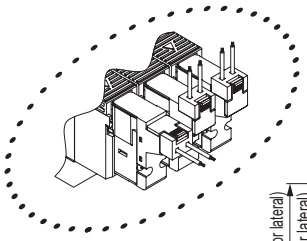

Note: Values in ( ) are applicable to AC voltages.

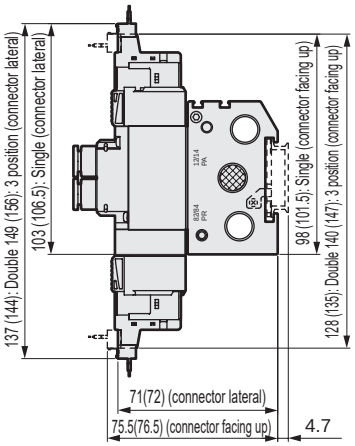

Station No.	2	3	4	5	6	7	8	9	10	11	12	13	14	15	16	17	18	19	20
L	57.0	73.0	89.0	105.0	121.0	137.0	153.0	169.0	185.0	201.0	217.0	233.0	249.0	265.0	281.0	297.0	313.0	329.0	345.0
L1	45.0	61.0	77.0	93.0	109.0	125.0	141.0	157.0	173.0	189.0	205.0	221.0	237.0	253.0	269.0	285.0	301.0	317.0	333.0
L2	100.0	125.0	137.5	150.0	162.5	187.5	200.0	212.5	225.0	250.0	262.5	275.0	300.0	312.5	325.0				
L3	87.5	112.5	125.0	137.5	150.0	175.0	187.5	200.0	212.5	237.5	250.0	262.5	287.5	300.0	312.5				

Dimensions

● External pilot (K)
EJ connector (E**J)

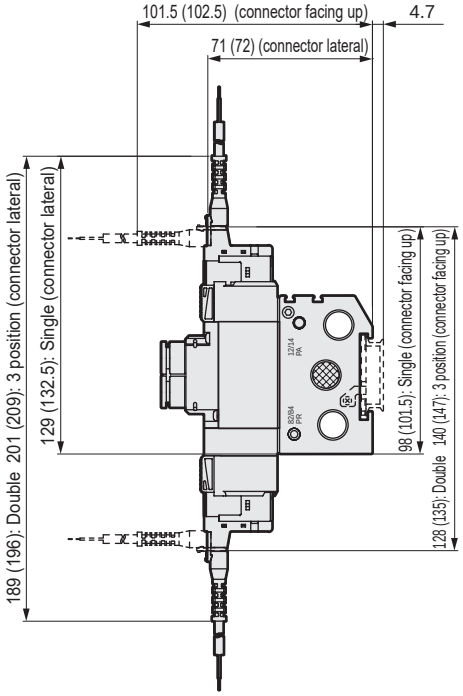

Note: Values in ( ) are applicable to AC voltages.

● External pilot (K)
DIN terminal box (B)

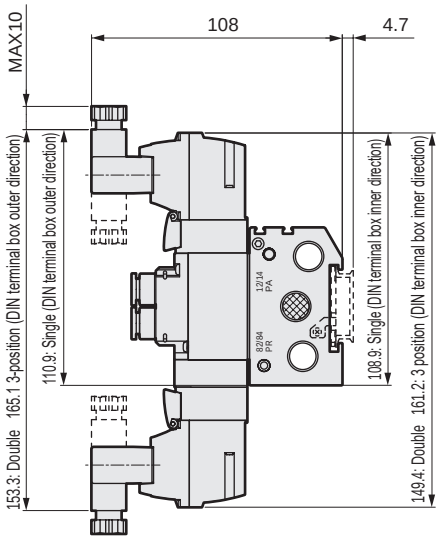

Note: The DIN terminal box assembly is shipped facing inward.

SCPD3
SCM
SSD2
MDC2
SMG
LCM
LCR
LCG
LCX
STM
STG
STR2
MRL2
GRC
Cylinder switch
MN3E MN4E
4GA/B
M4GA/B
MN4GA/B
F.R (module unit)
Clean F.R
Precision R
Press gauge Diff. press gauge
Electro-pneumatic R
Speed controller
Auxiliary valve
Fitting/ tube
Clean air unit
Pressure sensor
Flow rate sensor
Valve for air blow
Ending

Dimensions CAD

M4GA3-P7*

● Grommet lead wire (blank)

* For 2-position single 3-port valve, port A or port B is a plug.
* Refer to page 754 for details on mounting holes.

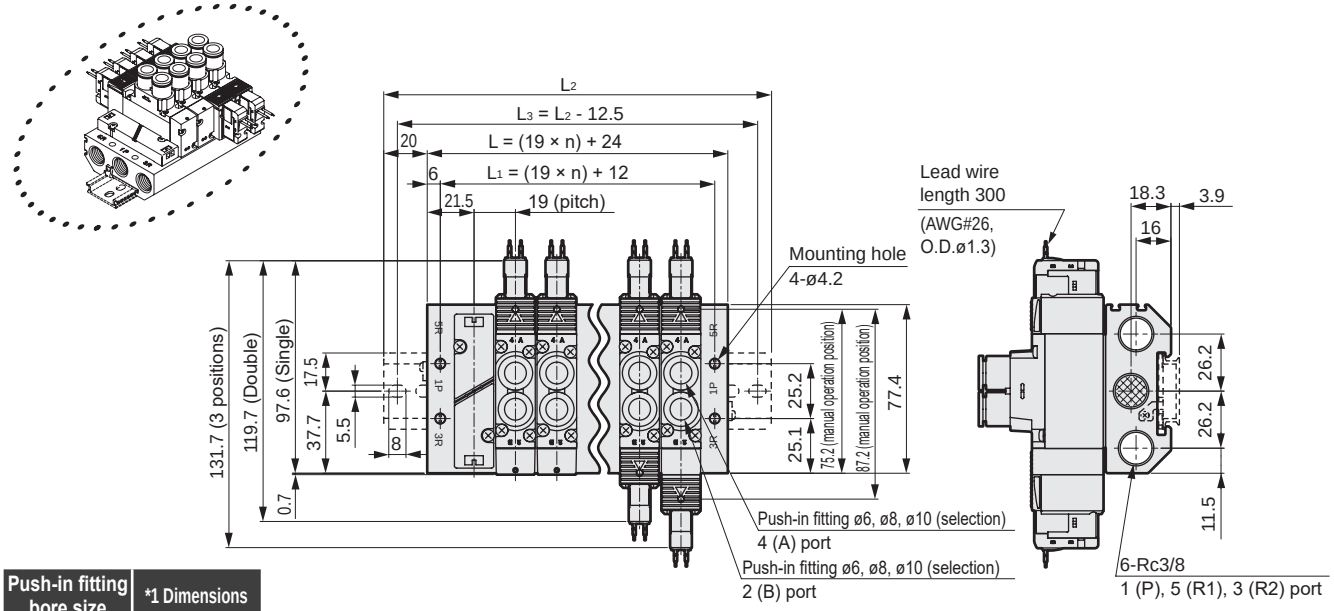

Push-in fitting bore size	*1 Dimensions
ø6	82.8
ø8	
ø10	88.3
ø5/16 inch	89
ø3/8 inch	92.2

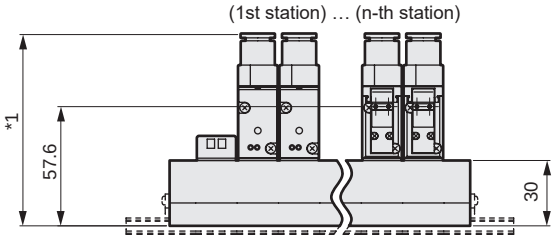

● Rc1/4 female thread (08)

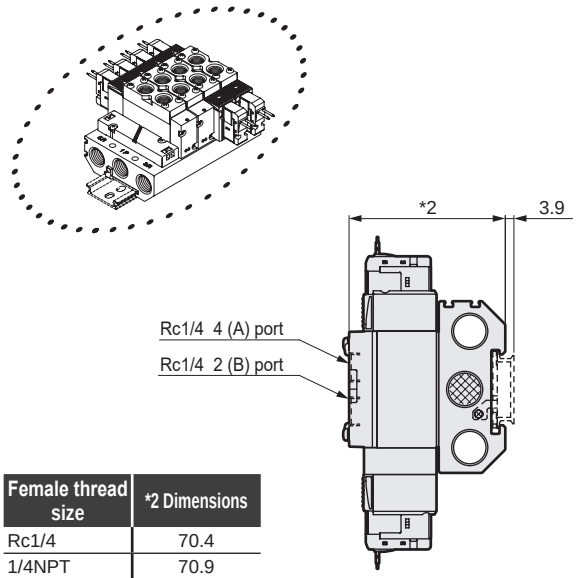

Female thread size	*2 Dimensions
Rc1/4	70.4
1/4NPT	70.9
G1/4	70.9

● E connector (E)

Note: Values in ( ) are applicable to AC voltages.

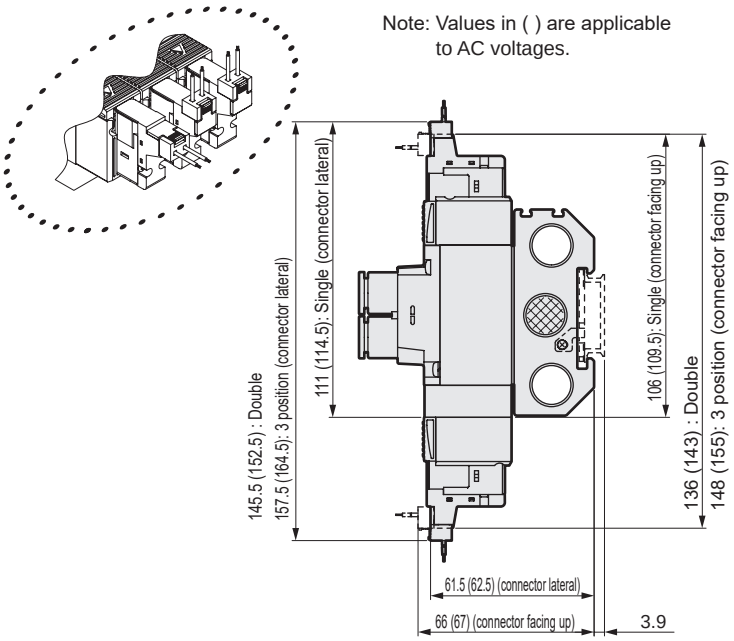

Station No.	2	3	4	5	6	7	8	9	10	11	12	13	14	15	16	17	18	19	20
L	62.0	81.0	100.0	119.0	138.0	157.0	176.0	195.0	214.0	233.0	252.0	271.0	290.0	309.0	328.0	347.0	366.0	385.0	404.0
L1	50.0	69.0	88.0	107.0	126.0	145.0	164.0	183.0	202.0	221.0	240.0	259.0	278.0	297.0	316.0	335.0	354.0	373.0	392.0
L2	112.5	125.0	150.0	162.5	187.5	200.0	225.0	237.5	262.5	275.0	300.0	312.5	337.5	350.0	375.0				
L3	100.0	112.5	137.5	150.0	175.0	187.5	212.5	225.0	250.0	262.5	287.5	300.0	325.0	337.5	362.5				

Dimensions

● EJ connector (E**J)

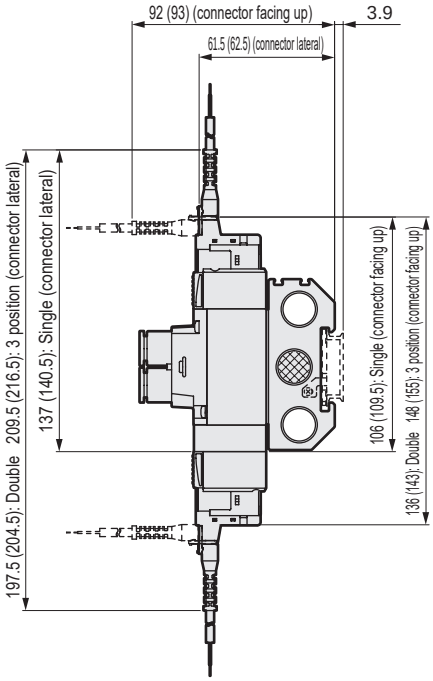

Note: Values in ( ) are applicable to AC voltages.

● DIN terminal box (B)

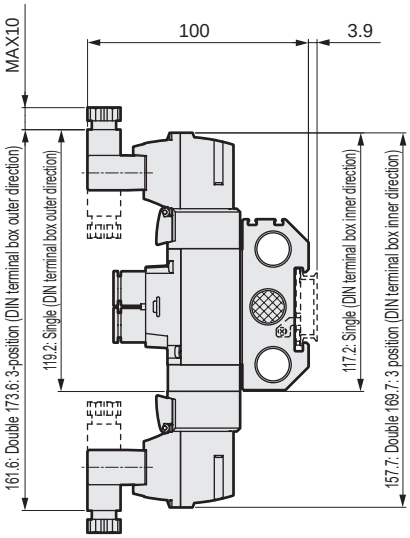

Note: The DIN terminal box assembly is shipped facing inward.

SCPD3
SCM
SSD2
MDC2
SMG
LCM
LCR
LCG
LCX
STM
STG
STR2
MRL2
GRC
Cylinder switch
MN3E MN4E
4GA/B
M4GA/B
MN4GA/B
F.R (module unit)
Clean F.R
Precision R
Press gauge Diff. press gauge
Electro-pneumatic R
Speed controller
Auxiliary valve
Fitting/ tube
Clean air unit
Pressure sensor
Flow rate sensor
Valve for air blow
Ending

Dimensions CAD

M4GA3-P7*

● External pilot (K)
Grommet lead wire (blank)

* For 2-position single 3-port valve, port A or port B is a plug.
* Refer to page 754 for details on mounting holes.

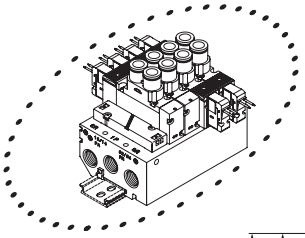

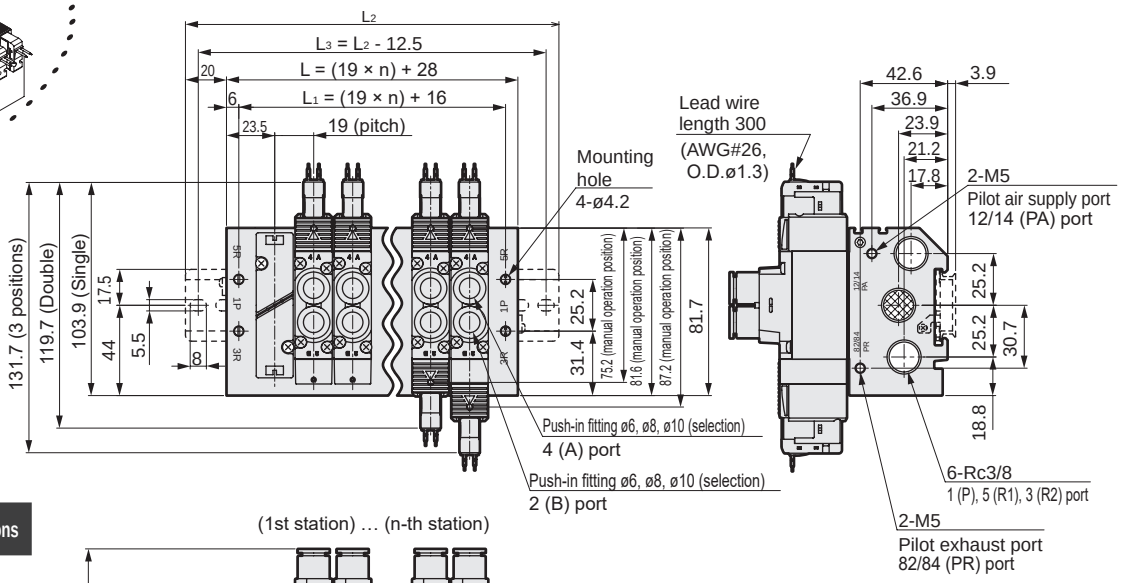

Push-in fitting bore size	*1 Dimensions
ø6	100.8
ø8	
ø10	106.3
ø5/16 inch	107
ø3/8 inch	110.2

(1st station) … (n-th station)

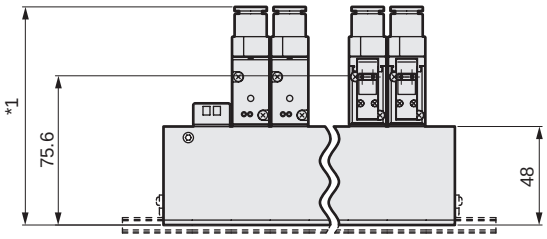

● External pilot (K)
Rc1/4 female thread (08)

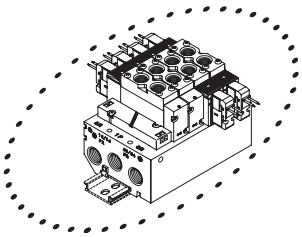

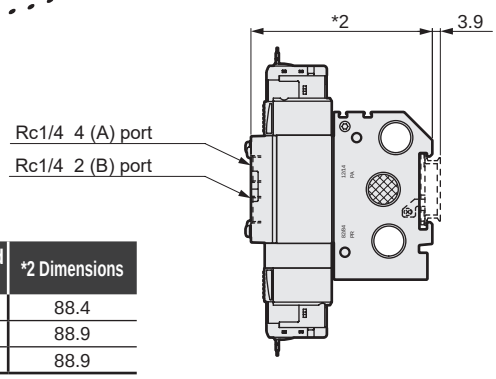

Female thread size	*2 Dimensions
Rc1/4	88.4
1/4NPT	88.9
G1/4	88.9

● External pilot (K)
E connector (E)

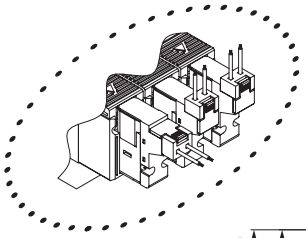

Note: Values in ( ) are applicable to AC voltages.

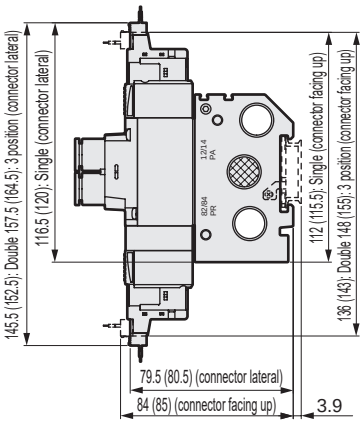

Station No.	2	3	4	5	6	7	8	9	10	11	12	13	14	15	16	17	18	19	20
L	66.0	85.0	104.0	123.0	142.0	161.0	180.0	199.0	218.0	237.0	256.0	275.0	294.0	313.0	332.0	351.0	370.0	389.0	408.0
L1	54.0	73.0	92.0	111.0	130.0	149.0	168.0	187.0	206.0	225.0	244.0	263.0	282.0	301.0	320.0	339.0	358.0	377.0	396.0
L2	112.5	125.0	150.0	175.0	187.5	212.5	225.0	250.0	262.5	287.5	300.0	325.0	337.5	362.5	375.0				
L3	100.0	112.5	137.5	162.5	175.0	200.0	212.5	237.5	250.0	275.0	287.5	312.5	325.0	350.0	362.5				

Dimensions

● External pilot (K)
EJ connector (E**J)

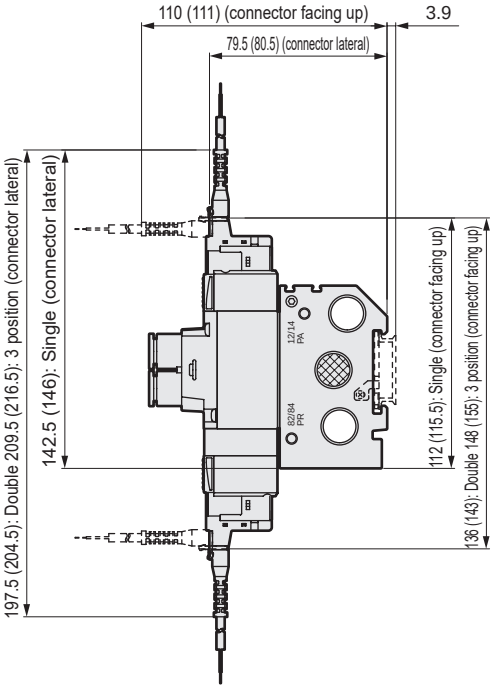

Note: Values in ( ) are applicable to AC voltages.

● External pilot (K)
DIN terminal box (B)

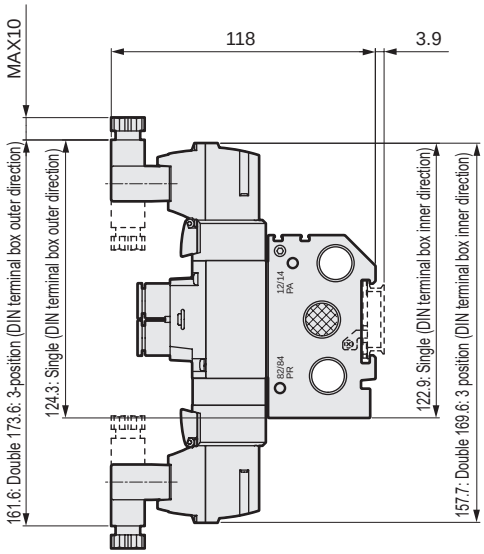

Note: The DIN terminal box assembly is shipped facing inward.

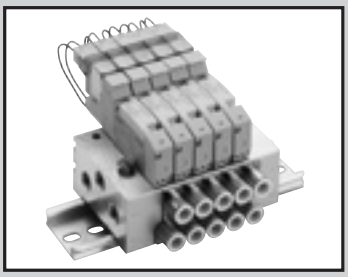

Individual wiring manifold
Base piping
Direct mount DIN rail mount

M3GB1, 2/M4GB1, 2, 3-(D) Series

● Applicable cylinder bore size: ø20 to ø100

JIS symbol

● Dual 3-port valve integrated

(A side valve: NC, B side valve: NC)

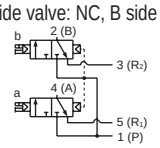

(A side valve: NC, B side valve: NO)

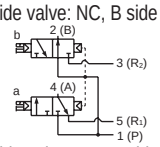

(A side valve: NO, B side valve: NC)

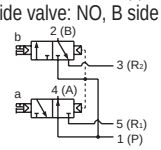

(A side valve: NO, B side valve: NO)

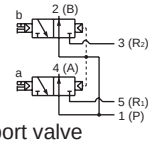

● 5-port valve

2-position single

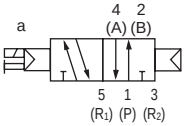

2-position double

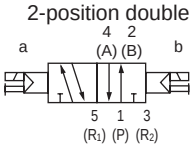

3-position
All ports closed

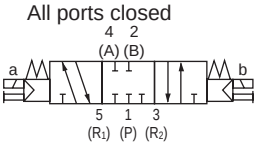

3-position A/B/R connection

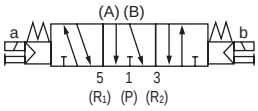

3 positions P/A/B connection

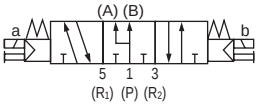

Structure and material restriction

	Structure	Material restriction			Model No.
P7 Series	Dust generation preventing				– P70
	Dust generation preventing	Copper-based materials prohibited	Silicon-based materials prohibited	Halogen-based materials prohibited (fluorine, chlorine, bromine)	– P74 Custom order product

Manifold common specifications

Item		Description
Manifold		Integrated base
Mounting method		Direct mount/DIN rail mount
Air supply and exhaust method		Common supply/common exhaust (With internal exhaust check valve)
Pilot exhaust method	Internal pilot	Main valve/pilot valve common exhaust (Pilot exhaust check valve built-in)
	External pilot	Main valve/pilot valve individual exhaust
Piping direction		Valve top direction
Valve and operation		Pilot operated soft spool valve
Working fluid		Compressed air
Max. working pressure MPa		0.7
Min. working pressure MPa		0.2 (*3)
Proof pressure MPa		1.05
Ambient temperature °C		-5 to 55 (no freezing)
Fluid temperature °C		5 to 55
Manual override		Non-locking/locking common (standard)
Lubrication (*1)		Not required
Degree of protection (*2)		Dust-proof
Vibration resistance m/s^2		50 or less
Shock resistance m/s^2		300 or less
Atmosphere		Cannot be used in corrosive gas environments

*1: Use turbine oil Class 1 ISO VG32 for lubrication. Excessive or intermittent lubrication results in unstable operation.
*2: Avoid water drops or oil, etc., during use. IP65 (water jet proof) applies for DIN terminal box specifications. However, the specified outer diameter of the cord and tightening torque must be used for fixing in place.
*3: The working pressure range is 0 to 0.7MPa when the external pilot (option code: K) is selected. Set the external pilot pressure between 0.2 and 0.7 MPa.

Electrical specifications

Descriptions							
Rated voltage V		DC 24	DC 12	DC 5	DC 3	AC 100	AC 200
Voltage fluctuation range		±10%					
Holding current A (*4)	Standard	0.015 (0.017)	0.030 (0.034)	0.072 (0.082)	0.120 (0.136)	0.009 (0.009)	0.006 (0.006)
	Low exoergic/energy-saving circuit built-in	0.005	0.010	-		-	
Power consumption W (*4)	Standard	0.35 (0.40)		0.35 (0.40)		-	
	Low exoergic/energy-saving circuit built-in	0.1		-		-	
Apparent power VA (*4) (*5)	Standard	-		-		0.93 (0.98)	1.40
Thermal class		B					
Surge suppressor		Option					
Indicator		Lamp (option)					

*4: Values in ( ) apply when with lamp option. A type of low exoergic/energy-saving circuit built-in is only available with a lamp attached.
*5: The value for 200 VAC applies DIN terminal box (with lamp).

Individual specifications

Descriptions			M3GB1/M4GB1		M3GB2/M4GB2		M4GB3	
			Direct mount	DIN rail mount	Direct mount	DIN rail mount	Direct mount	DIN rail mount
Max. station number		Standard (Internal pilot)	20 stations	16 stations	20 stations	16 stations	20 stations	16 stations
		External pilot	12 stations	12 stations				
Port size	Rc thread, M5	A/B port	Barbed fitting ø1.8 Push-in fitting ø1.8, ø4, ø6, ø8 (*6) M5		Push-in fitting ø4, ø6, ø8, ø10 (*6) Rc1/8		Push-in fitting ø6, ø8, ø10 Rc1/4	
		P/R1/R2 port	Rc1/8		Rc1/4		Rc3/8	
	NPT thread, M5	A/B port	Push-in fitting ø1/8 inch, ø5/32 inch M5		Push-in fitting ø1/4 inch, ø5/16 inch 1/8NPT		Push-in fitting ø5/16 inch, ø3/8 inch 1/4NPT (*6)	
		P/R1/R2 port	1/8NPT		1/4NPT		3/8NPT (*6)	
	G thread, M5	A/B port	Push-in fitting ø4, ø6 M5		Push-in fitting ø4, ø6, ø8 G1/8		-	
		P/R1/R2 port	G1/8		G1/4		-	
Manifold base Weight calculation formula (n: station No.) g		Standard	35n + 61	36n + 115	71n + 106	73n + 134	113n + 170	115n + 119
		External pilot	35n + 106	36n + 114	76n + 135	78n + 166	118n + 194	120n + 223

Refer to "Cautions for Mounting the DIN Rail" (page 754), and select the manifold.
For 10 or over manifold station No. (5 stations for 4G3), use ports on both side for air supply and exhaust. The manifold base weight is the value for screw specifications.
*6: This is a custom order product.

Performance/characteristics by model

Item			M3GB1/M4GB1		M3GB2/M4GB2		M4GB3	
			ON	OFF	ON	OFF	ON	OFF
Response time ms	Two 3-port valves integrated		9	12	12	29	-	-
	2-position	Single	12	12	19	19	25	28
		Double	9	-	18	-	24	-
	3-position	ABR connection	8	15	17	30	23	45

Values with a lamp/surge suppressor are shown.The response times are values with working pressure of 0.5 MPa at 20°C, without lubrication. They depend on the pressure and the lubricant quality.

Flow characteristics

Model No.	Solenoid position		P→A/B		A/B→R1/R2	
			C [dm³/(s·bar)]	b	C [dm³/(s·bar)]	b
M3GB1 M4GB1	Dual 3-port valve integrated		0.86	0.35	1.1 (0.67)	0.22 (0.23)
	2-position		1.1	0.22	1.2 (0.70)	0.20 (0.10)
	3-position	All ports closed	0.98	0.22	1.1 –	0.24 –
		ABR connection	0.97	0.35	1.3 (0.68)	0.22 (0.24)
		PAB connection	1.1	0.38	1.1 –	0.21 –
M3GB2 M4GB2	Dual 3-port valve integrated		1.7	0.44	2.1 (1.6)	0.32 (0.30)
	2-position		2.4	0.34	2.7 (1.7)	0.24 (0.31)
	3-position	All ports closed	2.2	0.34	2.4 –	0.29 –
		ABR connection	2.2	0.34	2.8 (1.8)	0.24 (0.27)
		PAB connection	2.4	0.29	2.4 –	0.29 –
M4GB3	2-position		3.5	0.34	3.8 (2.6)	0.11 (0.27)
	3-position	All ports closed	3.1	0.33	3.3 –	0.22 –
		ABR connection	3.0	0.30	3.8 (2.7)	0.11 (0.22)
		PAB connection	3.6	0.36	3.3 –	0.28 –

*1: Effective cross-sectional area S and sonic conductance C are converted as S ≈ 5.0 × C.
*2: Values in ( ) apply when the exhaust check valve is attached.

Ozone proof specifications • Cutting oil prohibited specifications

This can be set by selecting option "A" of Ⓔ in how to order on page 521.

How to order

Manifold model No.

M 4GB1 1 0R - C6 - E2 H D - ○ - 3 - P70

3-port manifold model No.

M 3GB1 66 0R - C6 - E2 H D - ○ - 3 - P70

● Discrete valve for mounting base

4GB1 1 9R - 00 - E2 H —— 3 - P70

● 3-port discrete valve for mounting base

3GB1 66 9R - 00 - E2 H —— 3 - P70

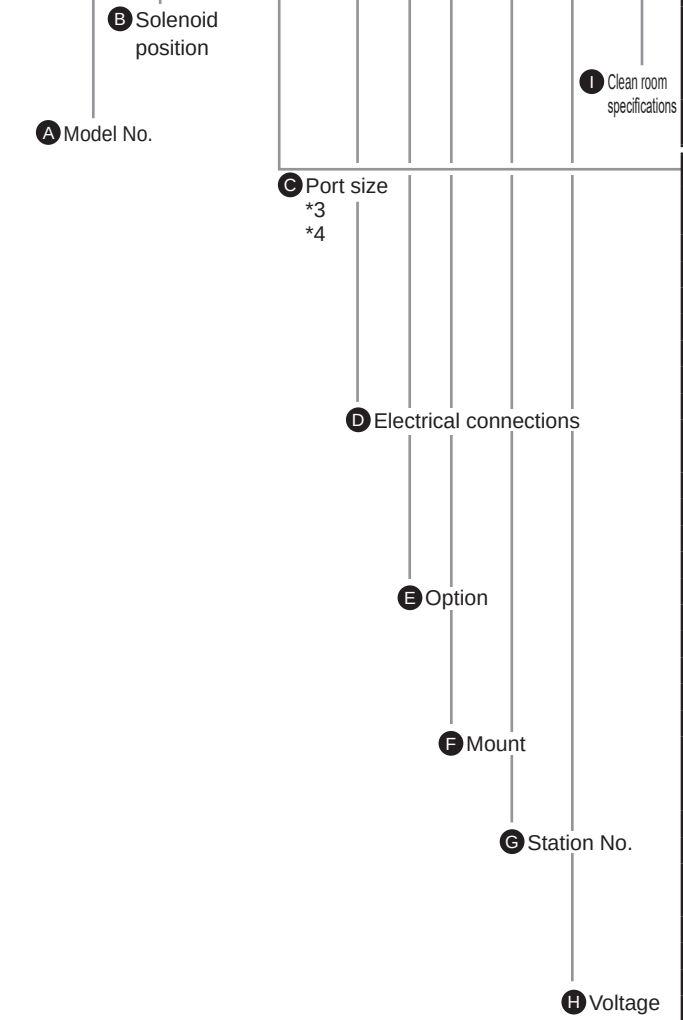

* Be sure to fill in the "manifold specifications" (pages 609 through 623).

Code	Content		A Model No. 3GB1	3GB2	4GB1	4GB2	4GB3
B Solenoid position							
1	2-position single				●	●	●
2	2-position double				●	●	●
3	3-position all ports closed				●	●	●
4	3-position ABR connection				●	●	●
5	3-position P/A/B connection				●	●	●
66	Dual 3-port valve integrated (*1, *2)	A side valve: Normally closed B side valve: Normally closed	●	●			
67		A side valve: Normally closed B side valve: Normally open	●	●			
76		A side valve: Normally open B side valve: Normally closed	●	●			
77		A side valve: Normally open B side valve: Normally open	●	●			
8	Mixed manifold (In case of multiple solenoid positions)		●	●	●	●	●

Port	4(A)/2(B) port		P/R1/R2 port (2)=Rc1/8 (3)=Rc1/4 (4)=Rc3/8				
C Port size							
CF	ø1.8 barbed fitting (applicable tube UP-9102-**)		(2)		(2)		
C18	ø1.8 push-in fitting (applicable tube UP-9402-**)		(2)		(2)		
C4	ø4 push-in fitting		(2)	(3)	(2)	(3)	
C6	ø6 push-in fitting		(2)	(3)	(2)	(3)	(4)
C8	ø8 push-in fitting	(*5, *6)	(2)	(3)	(2)	(3)	(4)
C10	ø10 push-in fitting	(*5, *6)		(3)		(3)	(4)
CL18	ø1.8 radial facing-up push-in fitting (applicable tube UP-9402-**)				(2)		
CL4	ø4 radial facing-up push-in fitting				(2)		
CL6	ø6 radial facing-up push-in fitting				(2)	(3)	
CL8	ø8 radial facing-up push-in fitting					(3)	(4)
CL10	ø10 radial facing-up push-in fitting						(4)
CD18	ø1.8 radial facing-down push-in fitting (applicable tube UP-9402-**)		(2)		(2)		
CD4	ø4 radial facing-down push-in fitting		(2)		(2)		
CD6	ø6 radial facing-down push-in fitting		(2)	(3)	(2)	(3)	
CD8	ø8 radial facing-down push-in fitting			(3)		(3)	(4)
CD10	ø10 radial facing-down push-in fitting						(4)
CX	Push-in fitting mix		(2)	(3)	(2)	(3)	(4)
M5	M5		(2)		(2)		
06	Rc1/8			(3)		(3)	
08	Rc1/4						(4)
Port	**4(A)/2(B) port**		**P/R1/R2 port (5)=1/8NPT (6)=1/4NPT (7)=3/8NPT**				
C3N	ø1/8 inch push-in fitting		(5)		(5)		
C4N	ø5/32 inch push-in fitting		(5)		(5)		
C6N	ø1/4 inch push-in fitting			(6)		(6)	
C8N	ø5/16 inch push-in fitting			(6)		(6)	(7)
C10N	ø3/8 inch push-in fitting						(7)
CL3N	ø1/8 inch radial facing-up push-in fitting	(*6)			(5)		
CL4N	ø5/32 inch radial facing-up push-in fitting	(*6)			(5)		
CL6N	ø1/4 inch radial facing-up push-in fitting	(*6)				(6)	
CL8N	ø5/16 inch radial facing-up push-in fitting	(*6)				(6)	
CXN	Push-in fitting mix		(5)	(6)	(5)	(6)	(7)
M5N	M5		(5)		(5)		
06N	1/8NPT			(6)		(6)	
08N	1/4NPT	(*6)					(7)
Port	**4(A)/2(B) port**		**P/R1/R2 port (8)=G1/8 (9)=G1/4 (10)=G3/8**				
C4G	ø4 push-in fitting		(8)	(9)	(8)	(9)	
C6G	ø6 push-in fitting		(8)	(9)	(8)	(9)	
C8G	ø8 push-in fitting			(9)		(9)	(10)
C10G	ø10 push-in fitting						(10)
CL4G	ø4 radial facing-up push-in fitting	(*6)			(8)		
CL6G	ø6 radial facing-up push-in fitting	(*6)			(8)	(9)	
CL8G	ø8 radial facing-up push-in fitting	(*6)				(9)	
CXG	Push-in fitting mix		(8)	(9)	(8)	(9)	(10)
M5G	M5		(8)		(8)		
06G	G1/8			(9)		(9)	
08G	G1/4						(10)
00	Discrete valve for mounting base		●	●	●	●	●

⚠ Precautions for model No. selection

*1: Select M4GB*80R when mixing with the 3, 5-port valves. Select M3GB*80R when mixing with the masking plate.
*2: Combinations with an external pilot (K) are not supported. In addition, the external dimensions are the same dimensions as each of the 2-position double solenoids.
3: CL radial push-in fitting will only support single solenoid manifolds. The configuration comprises an A port: long elbow, and B port: short elbow.
*4: A/B port sizes do not differ for the radial push-in fitting (facing up/down).
*5: Both C8 for 4G1 and C10 for 4G2 do not support push-in fitting mix.
*6: Custom order product.

		Ⓐ Model No.				
		3GB1	3GB2	4GB1	4GB2	4GB3
Ⓓ Electrical connections						
Blank	Grommet lead wire (300 mm) (*15)	●	●	●	●	●
B	DIN terminal box (Pg7) with surge suppressor/lamp (*16)(*18)		●		●	●
BN	DIN terminal box (Pg7) (no terminal box) with surge suppressor (*16)(*18)		●		●	●
E connector (up/lateral common)						
E0	Lead wire (300 mm) (*17)	●	●	●	●	●
E00	Lead wire (500 mm) (*17)	●	●	●	●	●
E01	Lead wire (1000 mm) (*17)	●	●	●	●	●
E02	Lead wire (2000 mm) (*17)	●	●	●	●	●
E03	Lead wire (3000 mm) (*17)	●	●	●	●	●
E0N	Without lead wire (without socket) (*17)	●	●	●	●	●
E1	Without lead wire (with socket/terminal) (*17)	●	●	●	●	●
E2	Lead wire (300 mm) with surge suppressor/lamp	●	●	●	●	●
E20	Lead wire (500 mm) with surge suppressor/lamp	●	●	●	●	●
E21	Lead wire (1000 mm) with surge suppressor/lamp	●	●	●	●	●
E22	Lead wire (2000 mm) with surge suppressor/lamp	●	●	●	●	●
E23	Lead wire (3000 mm) with surge suppressor/lamp	●	●	●	●	●
E2N	Without lead wire (without socket) with surge suppressor/lamp	●	●	●	●	●
E3	Without lead wire (with socket/terminal) with surge suppressor/lamp	●	●	●	●	●
EJ connector (socket with cover, up/lateral common)						
E01J	Lead wire (1000 mm) (*17)	●	●	●	●	●
E02J	Lead wire (2000 mm) (*17)	●	●	●	●	●
E03J	Lead wire (3000 mm) (*17)	●	●	●	●	●
E21J	Lead wire (1000 mm) with surge suppressor/lamp	●	●	●	●	●
E22J	Lead wire (2000 mm) with surge suppressor/lamp	●	●	●	●	●
E23J	Lead wire (3000 mm) with surge suppressor/lamp	●	●	●	●	●
Ⓔ Option						
Blank	Non-locking and locking model shared manual override	●	●	●	●	●
M	Non-locking manual override	●	●	●	●	●
H	With exhaust check valve (*7)	●	●	●	●	●
K	External pilot (*8)	●	●	●	●	●
A	Ozone/cutting oil compatible	●	●	●	●	●
S	Surgeless (*9)	●	●	●	●	●
E	Low exoergic/energy-saving circuit (*9, 10)	●	●	●	●	●
F	Built-in A/B port filter (*11)	●	●	●	●	●
Z1	Air supply spacer (*12)	●	●	●	●	●
Z3	Exhaust spacer (*12)	●	●	●	●	●
Ⓕ Mount						
Blank	Direct mount (*13)	●	●	●	●	●
D	DIN rail mount	●	●	●	●	●
Ⓖ Station No.						
2	2 stations	●	●	●	●	●
to	to					
20	Refer to page 519 for the max. station number per port size.					
Ⓗ Voltage						
1	100 VAC (with rectifier circuit)	●	●	●	●	●
2	200 VAC (with rectifier circuit) (*14)		●		●	●
3	24 VDC	●	●	●	●	●
4	12 VDC	●	●	●	●	●
7	3 VDC	○	○	○	○	○
8	5 VDC	○	○	○	○	○
Ⓘ Clean room specifications (*18, 19, 20)						
	Structure / Material restriction					
P70	Exhaust treatment / -	●	●	●	●	●
P74	Exhaust treatment / Copper-/silicon-/halogen-based materials (fluorine, chlorine, bromine) are prohibited.	○	○	○	○	○

is not available. ○ Custom order products. Contact CKD for details.

***7: 3-position all ports closed and PAB connection are not provided with the exhaust check valve (H). Refer to page 751 for details on the exhaust check valve.**
*8: Contact CKD when using a vacuum with the external pilot (K).
9: Only E2 and E2*J connectors and 12/24 VDC are supported.
In addition, selecting a combination of surgeless "S" and the low-heat-generating/power-saving circuit "E" is not allowed.
*10: Applicable to surgeless specifications

Electrical connections

Discrete valve/individual wiring manifold

Blank Grommet lead wire

● **Lead wire length**
300 mm

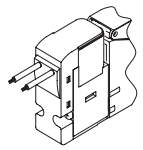

E1 E3 E connector with socket/terminal

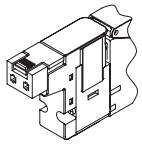

E0 E2 E connector

● **Lead wire length**
300 mm
500 mm
1000 mm
2000 mm
3000 mm

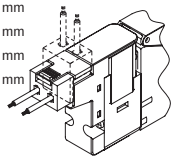

B DIN terminal box

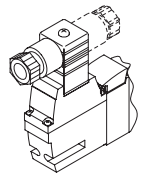

E0N E2N E connector without socket

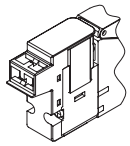

BN DIN terminal box (no terminal box)

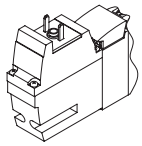

E0*J E2*J EJ connector

● **Lead wire length**
1 m
2 m
3 m

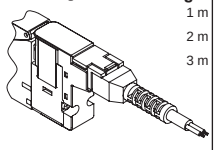

*11: P port is equipped with a filter as standard.
***12: Specify the spacer mounting position and quantity in manifold specifications. Stacking multiple spacers is not supported. Combination with the masking plate is not supported. Refer to pages 592 to 595 for details.**
*13: When purchasing the direct mount of M4GB1, it cannot be changed to the DIN rail mount afterward.
*14: Supported only for DIN terminal box.
*15: The grommet lead wire specifications are only applicable to DC voltages.
*16: AC voltage and 12/24 VDC are supported. The lamp is incorporated in the terminal box.
*17: For AC voltage, a rectifier circuit is equipped.
*18: Terminal box is EN175301-803Type C (old DIN 43650-C) compliant product. Refer to page 756 for details.
*19: A (ozone compatible) and Ⓘ clean room specifications P74 cannot be combined.
*20: Specifications which do not allow copper-based/silicon-based/halogen-based materials apply to the main valve section.
*21: P74 Series is a custom order product.

SCPD3
SCM
SSD2
MDC2
SMG
LCM
LCR
LCG
LCX
STM
STG
STR2
MRL2
GRC
Cylinder switch
MN3E MN4E
4GA/B
M4GA/B
MN4GA/B
F.R (module unit)
Clean F.R
Precision R
Press gauge Diff. press gauge
Electro-pneumatic R
Speed controller
Auxiliary valve
Fitting/ tube
Clean air unit
Pressure sensor
Flow rate sensor
Valve for air blow
Ending

Dimensions CAD

*1: This is dedicated to direct mount. It cannot be changed to DIN rail specifications.
*2: The dimension of the dual 3-port valve integrated type is the same as that of the double type.
*Refer to page 755 for details on mounting holes.

M4GB1-P7*

● Direct mount installation
Grommet lead wire (blank)

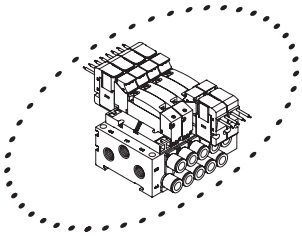

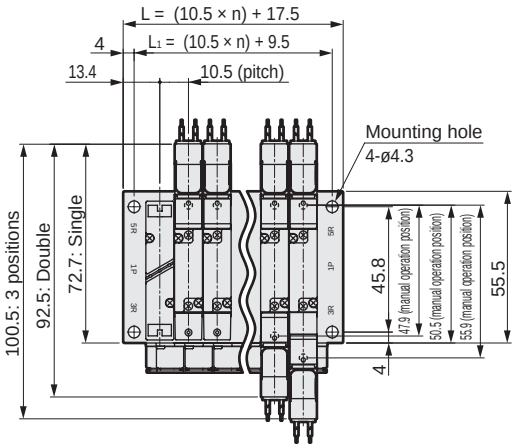

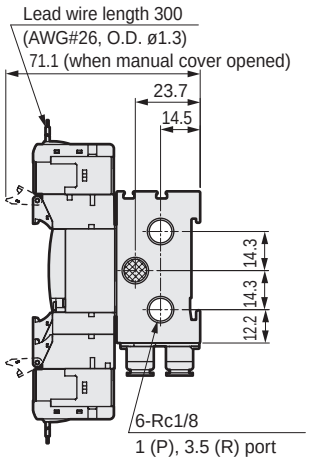

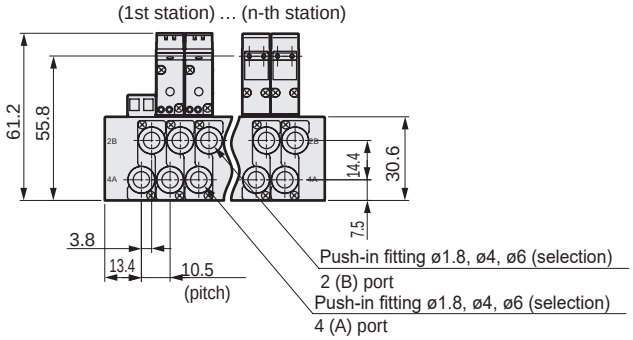

● M5 female thread (M5)

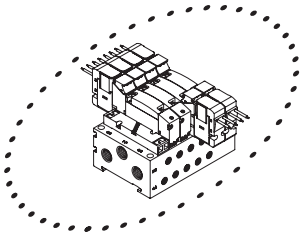

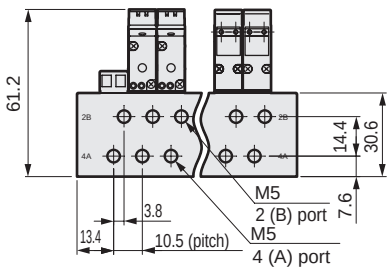

● E connector (E)

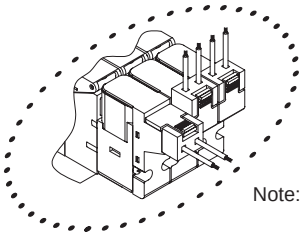

Note: Values in ( ) are applicable to AC voltages.

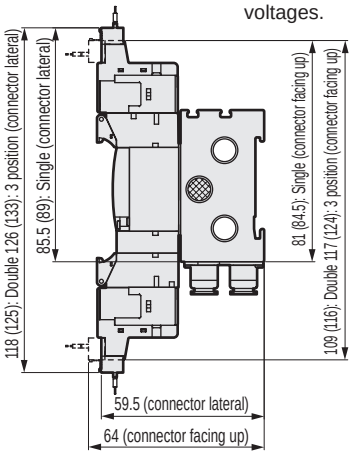

● EJ connector (E**J)

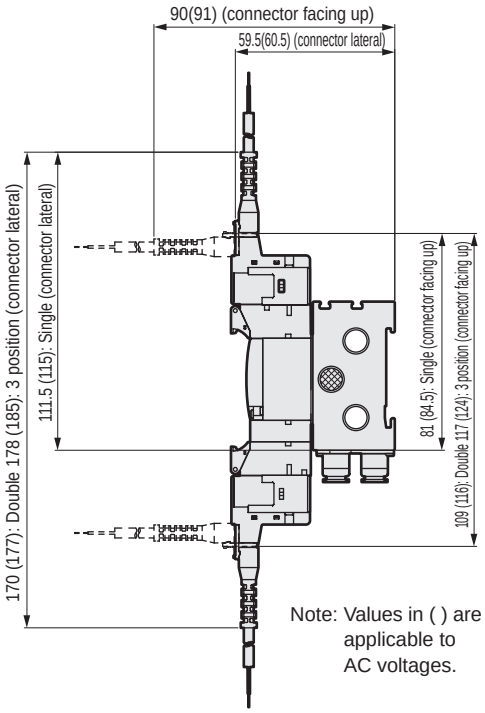

Note: Values in ( ) are applicable to AC voltages.

Station No.	2	3	4	5	6	7	8	9	10	11	12	13	14	15	16	17	18	19	20
L	38.5	49.0	59.5	70.0	80.5	91.0	101.5	112.0	122.5	133.0	143.5	154.0	164.5	175.0	185.5	196.0	206.5	217.0	227.5
L1	30.5	41.0	51.5	62.0	72.5	83.0	93.5	104.0	114.5	125.0	135.5	146.0	156.5	167.0	177.5	188.0	198.5	209.0	219.5

Dimensions

*1: This can be changed to direct mount specifications.
*2: The dimension of the dual 3-port valve integrated is the same as that of the double.
*Refer to page 755 for details on mounting holes.

M4GB1-P7*

● DIN rail mounting (D)
Grommet lead wire (blank)

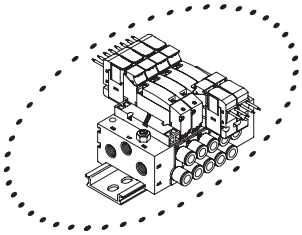

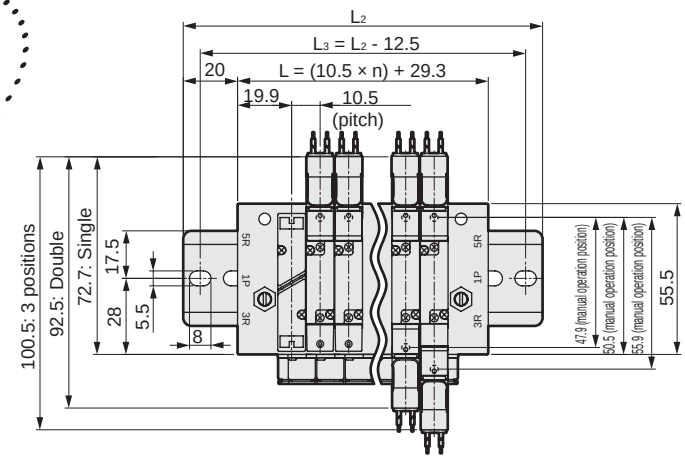

(1st station) … (n-th station)

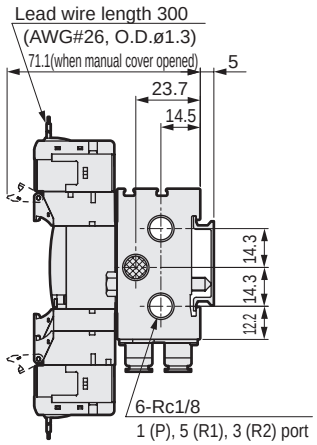

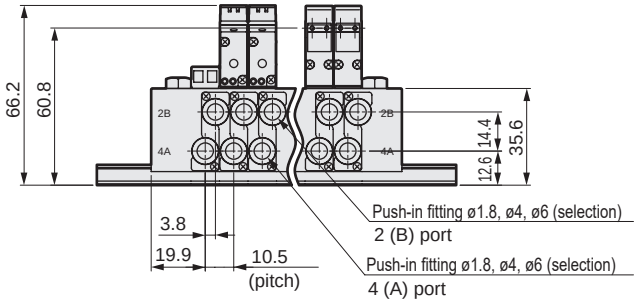

● DIN rail mounting (D)
M5 female thread (M5)

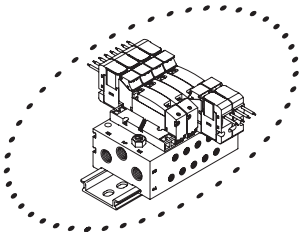

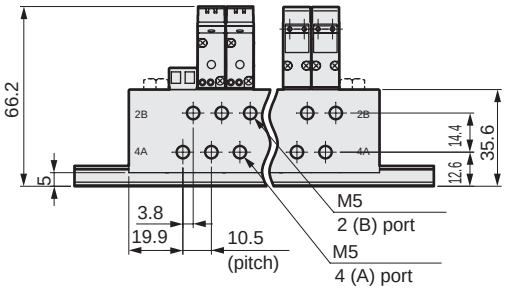

● DIN rail mounting (D)
E connector (E)

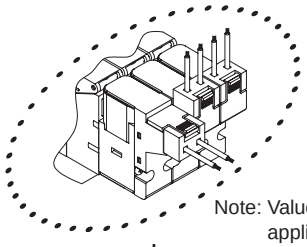

Note: Values in ( ) are applicable to AC voltages.

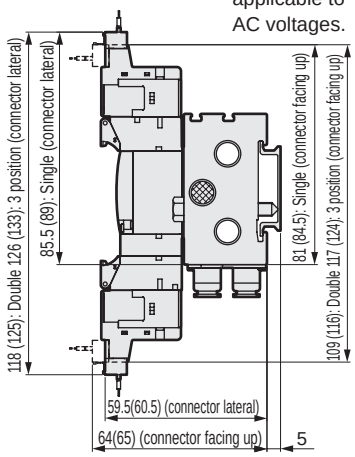

● EJ connector (E**J)

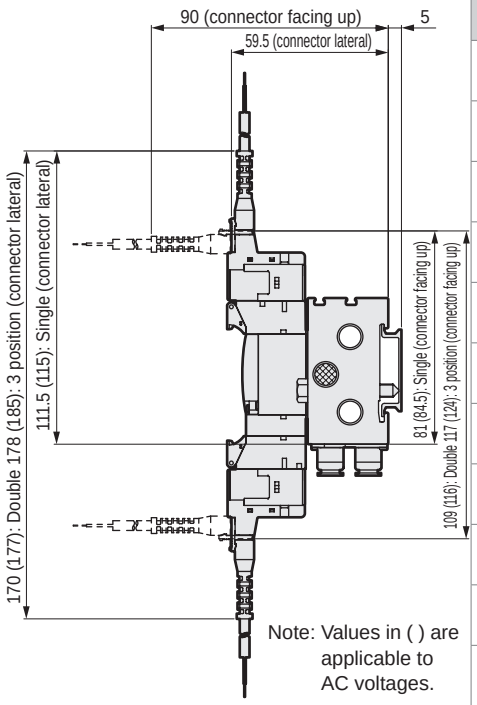

Note: Values in ( ) are applicable to AC voltages.

Station No.	2	3	4	5	6	7	8	9	10	11	12	13	14	15	16
L	50.3	60.8	71.3	81.8	92.3	102.8	113.3	123.8	134.3	144.8	155.3	165.8	176.3	186.8	197.3
L_2	100.0	112.5	112.5	125.0	137.5	150.0	162.5	175.0	175.0	187.5	200.0	212.5	225.0	237.5	237.5
L_3	87.5	100.0	100.0	112.5	125.0	137.5	150.0	162.5	162.5	175.0	187.5	200.0	212.5	225.0	225.0

SCPD3
SCM
SSD2
MDC2
SMG
LCM
LCR
LCG
LCX
STM
STG
STR2
MRL2
GRC
Cylinder switch
MN3E MN4E
4GA/B
M4GA/B
MN4GA/B
F.R (module unit)
Clean F.R
Precision R
Press gauge Diff. press gauge
Electro-pneumatic R
Speed controller
Auxiliary valve
Fitting/ tube
Clean air unit
Pressure sensor
Flow rate sensor
Valve for air blow
Ending

Dimensions

M4GB1-C8-P7*

Note: This is a dedicated manifold base.

*Refer to page 755 for details on mounting holes.

● Grommet lead wire (blank)

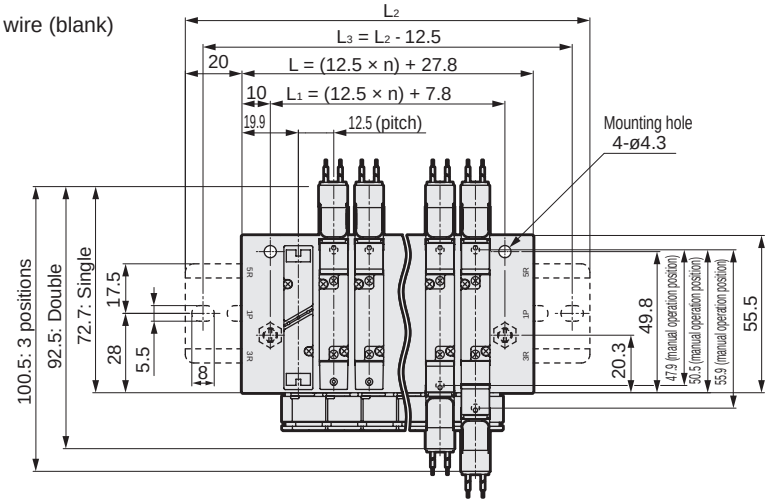

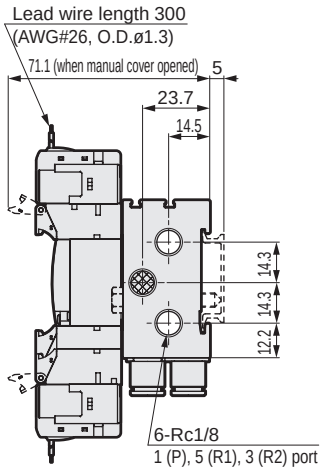

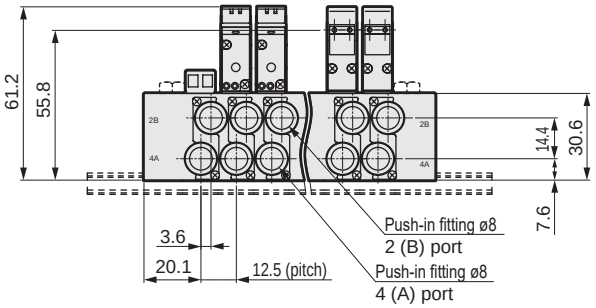

● E connector (E)

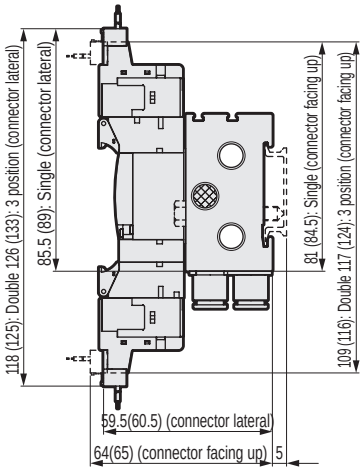

Note: Values in ( ) are for AC voltage.

● EJ connector (E**J)

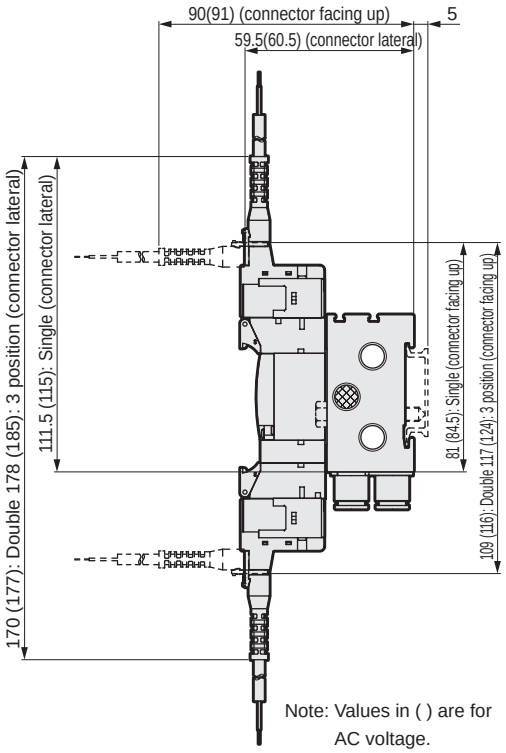

Note: Values in ( ) are for AC voltage.

Station No.	2	3	4	5	6	7	8	9	10	11	12	13	14	15	16	17	18	19	20
L	52.8	65.3	77.8	90.3	102.8	115.3	127.8	140.3	152.8	165.3	177.8	190.3	202.8	215.3	227.8	240.3	252.8	265.3	277.8
L1	32.8	45.3	57.8	70.3	82.8	95.3	107.8	120.3	132.8	145.3	157.8	170.3	182.8	195.3	207.8	220.3	232.8	245.3	257.8
L2	100.0	112.5	125.0	137.5	150.0	162.5	175.0	187.5	200.0	212.5	225.0	237.5	250.0	262.5	275.0				
L3	87.5	100.0	112.5	125.0	137.5	150.0	162.5	175.0	187.5	200.0	212.5	225.0	237.5	250.0	262.5				

Dimensions

M4GB1-P7*

● External pilot (K)
Grommet lead wire (blank)

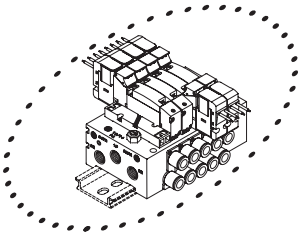

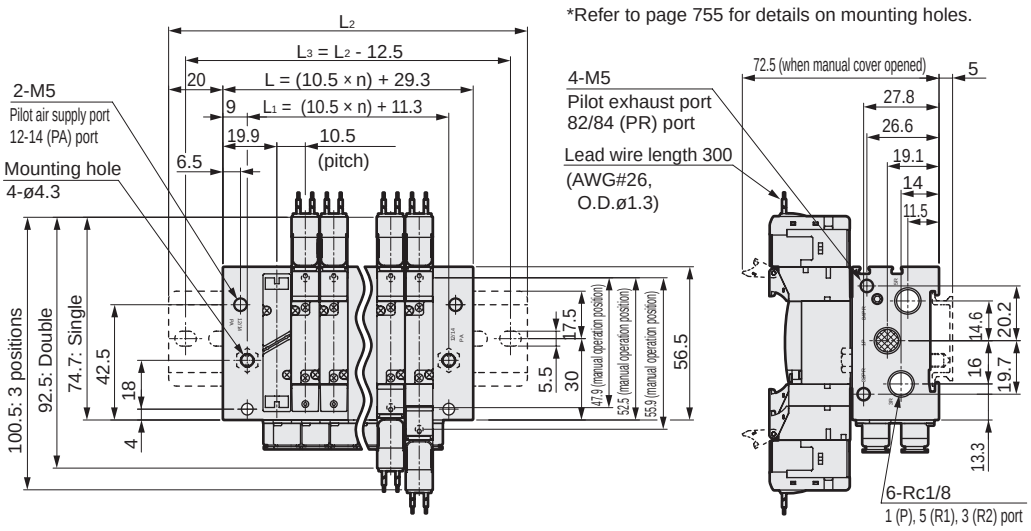

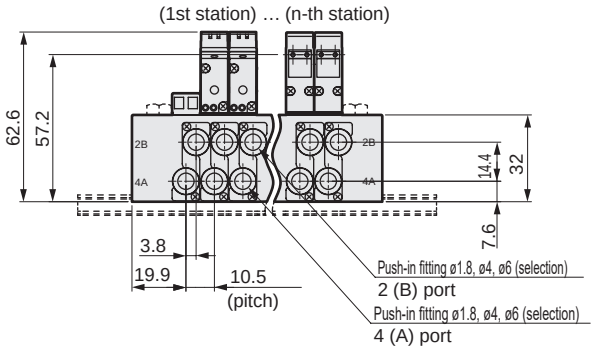

● External pilot (K)
M5 female thread (M5)

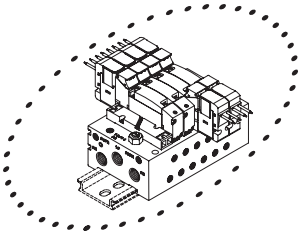

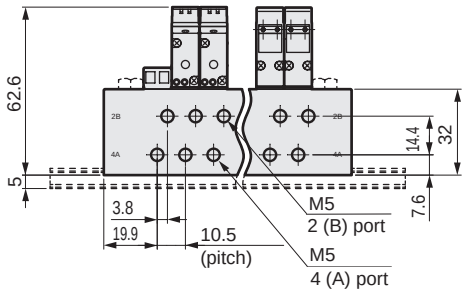

● External pilot (K)
E connector (E)

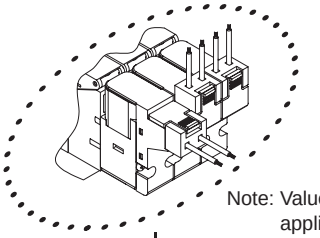

Note: Values in ( ) are applicable to AC voltages.

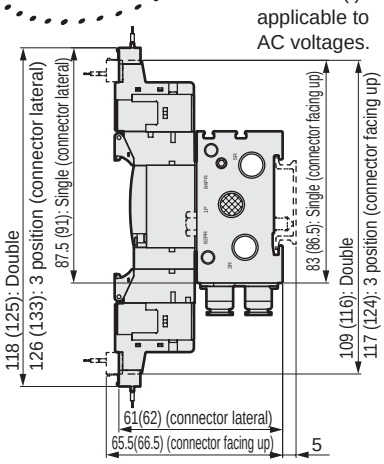

● External pilot (K)
EJ connector (E**J)

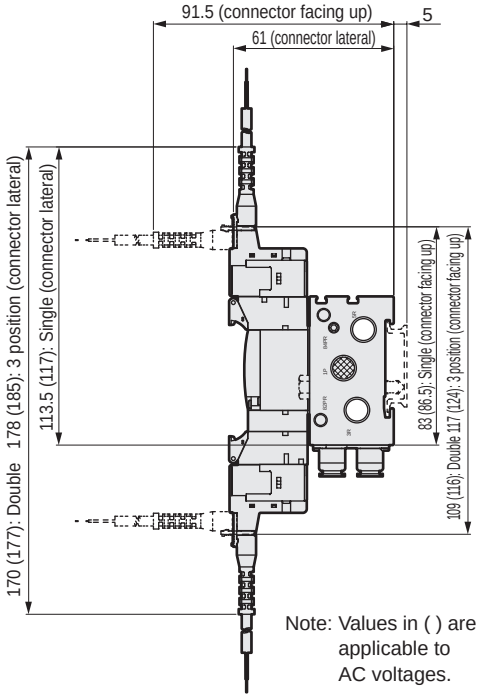

Note: Values in ( ) are applicable to AC voltages.

Station No.	2	3	4	5	6	7	8	9	10	11	12
L	50.3	60.8	71.3	81.8	92.3	102.8	113.3	123.8	134.3	144.8	155.3
L1	32.3	42.8	53.3	63.8	74.3	84.8	95.3	105.8	116.3	126.8	137.3
L2	100.0	112.5	112.5	125.0	137.5	150.0	162.5	175.0	175.0	187.5	200.0
L3	87.5	100.0	100.0	112.5	125.0	137.5	150.0	162.5	162.5	175.0	187.5

SCPD3
SCM
SSD2
MDC2
SMG
LCM
LCR
LCG
LCX
STM
STG
STR2
MRL2
GRC
Cylinder switch
MN3E MN4E
4GA/B
M4GA/B
MN4GA/B
F.R (module unit)
Clean F.R
Precision R
Press gauge Diff. press gauge
Electro-pneumatic R
Speed controller
Auxiliary valve
Fitting/ tube
Clean air unit
Pressure sensor
Flow rate sensor
Valve for air blow
Ending

Dimensions

M4GB1-C8-K-P7*

Note: This is a dedicated manifold base.

*Refer to page 755 for details on mounting holes.

● External pilot (K)
Grommet lead wire (blank)

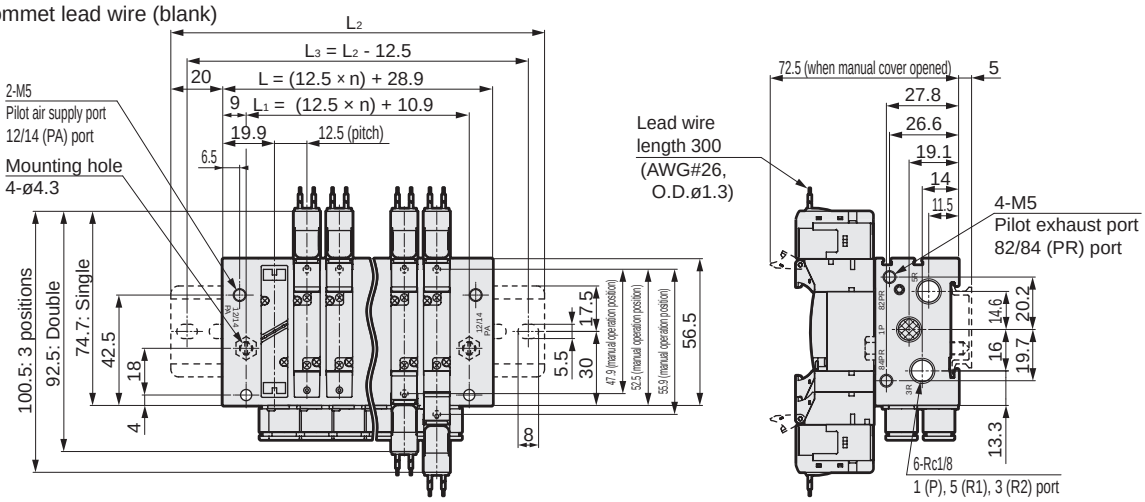

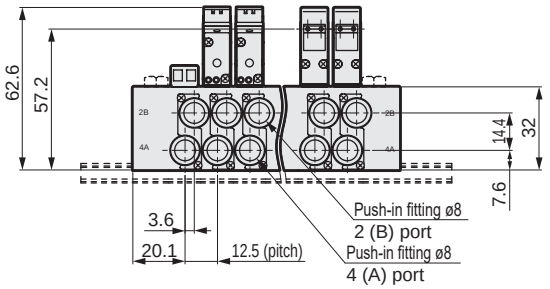

● External pilot (K)
E connector (E)

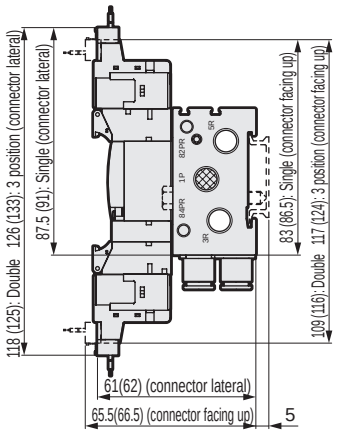

Note: Values in ( ) are for AC voltage.

● External pilot (K)
EJ connector (E**J)

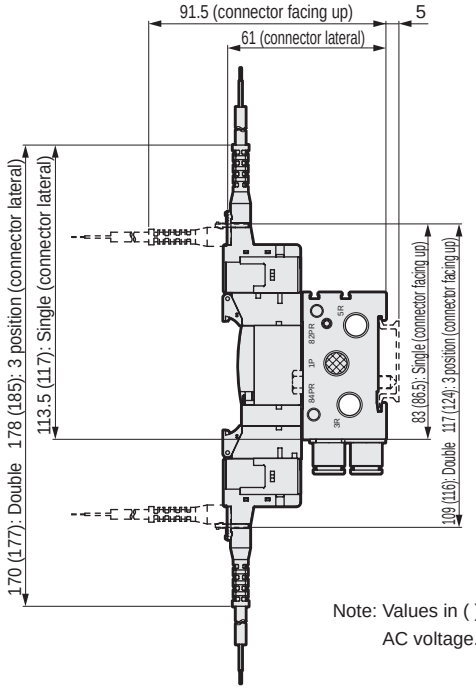

Note: Values in ( ) are for AC voltage.

Station No.	2	3	4	5	6	7	8	9	10	11	12
L	53.9	66.4	78.9	91.4	103.9	116.4	128.9	141.4	153.9	166.4	178.9
L_1	35.9	48.4	60.9	73.4	85.9	98.4	110.9	123.4	135.9	148.4	160.9
L_2	100.0	112.5	125.0	137.5	150.0	162.5	175.0	187.5	200.0	212.5	225.0
L_3	87.5	100.0	112.5	125.0	137.5	150.0	162.5	175.0	187.5	200.0	212.5

Dimensions

● Straight fitting

● ø1.8 (CF) ● ø1.8 (C18) ● ø4 (C4) ● ø6 (C6) ● ø8 (C8)

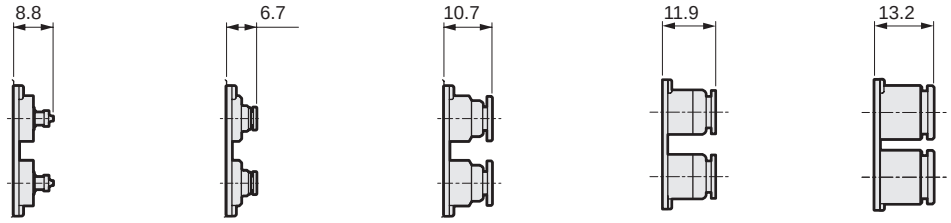

● Straight fitting, single plug

● ø1.8 (CFNC) ● ø1.8 (C18NC) ● ø4 (C4NC) ● ø6 (C6NC) ● ø8 (C8NC) ● ø1.8 (CFNO) ● ø1.8 (C18NO) ● ø4 (C4NO) ● ø6 (C6NO) ● ø8 (C8NO)

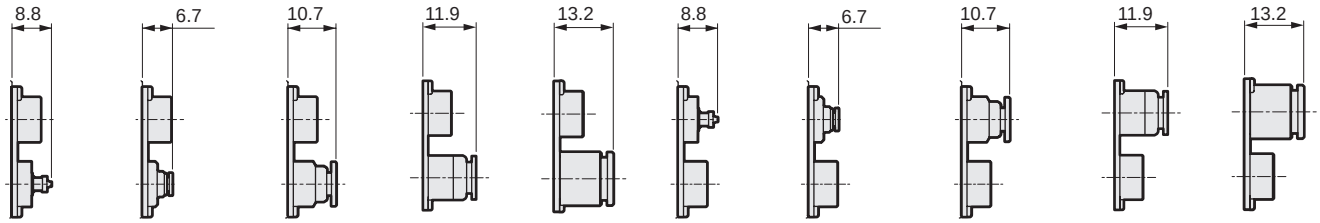

● Radial fitting (facing up)

● ø1.8 (CL18) ● ø4 (CL4) ● ø6 (CL6)

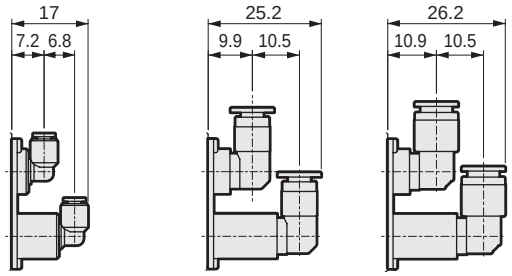

● Radial fitting (facing down)

● ø1.8 (CD18) ● ø4 (CD4) ● ø6 (CD6)

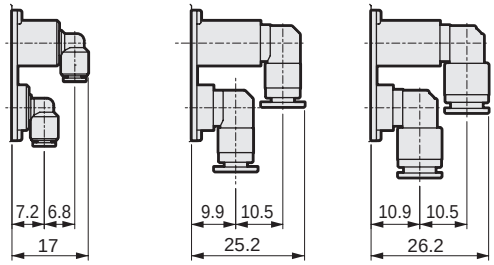

● Radial fitting (facing up), single plug

● ø1.8 (CL18NC) ● ø4 (CL4NC) ● ø6 (CL6NC) ● ø1.8 (CL18NO) ● ø4 (CL4NO) ● ø6 (CL6NO)

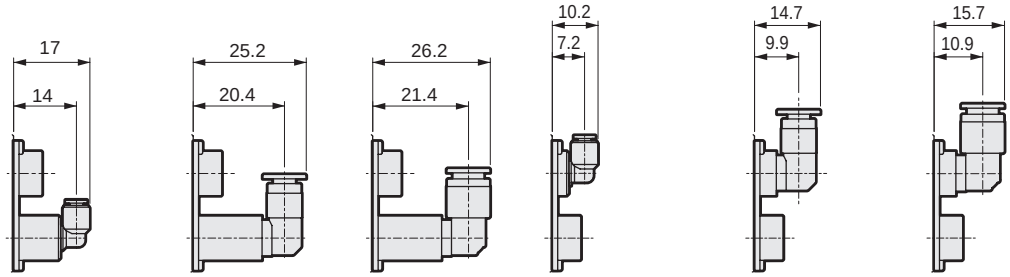

● Radial push-in fitting (facing down), single plug

● ø1.8 (CD18NC) ● ø4 (CD4NC) ● ø6 (CD6NC) ● ø1.8 (CD18NO) ● ø4 (CD4NO) ● ø6 (CD6NO)

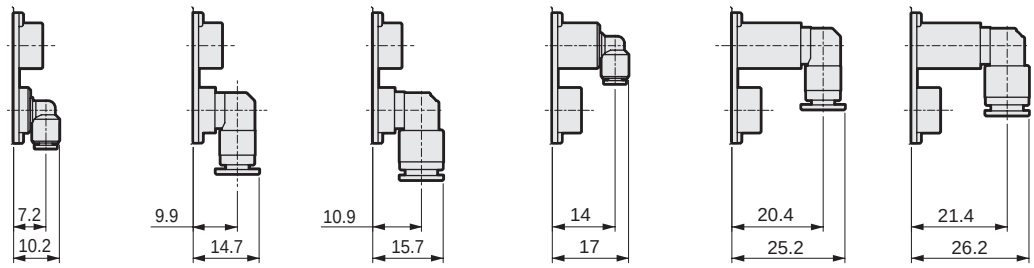

Dimensions

● Straight fitting

● ø1/8 inch (C3N)

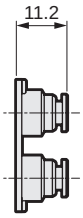

● ø5/32 inch (C4N)

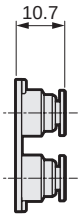

● Straight fitting, single plug

● ø1/8 inch (C3NCN)

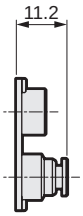

● ø5/32 inch (C4NCN)

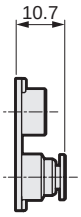

● ø1/8 inch (C3NON)

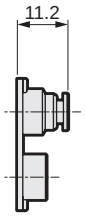

● ø5/32 inch (C4NON)

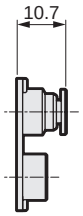

● Radial fitting (facing up)

● ø1/8 inch (CL3N)

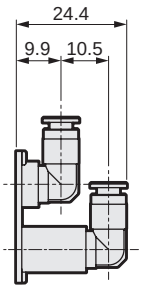

● ø5/32 inch (CL4N)

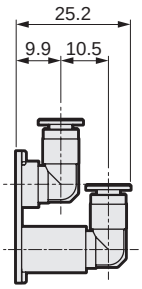

● ø1/8 inch (CD3N)

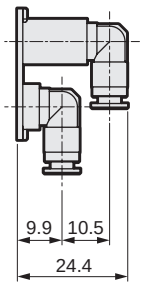

● ø5/32 inch (CD4N)

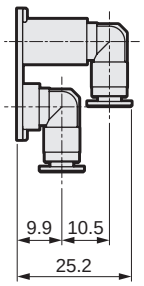

● Radial fitting (facing up), single plug

● ø1/8 inch (CL3NCN)

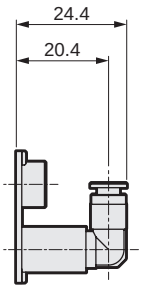

● ø5/32 inch (CL4NCN)

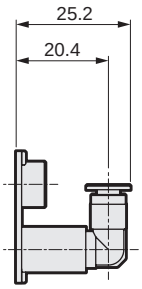

● ø1/8 inch (CL3NON)

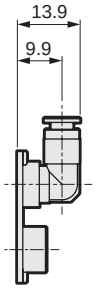

● ø5/32 inch (CL4NON)

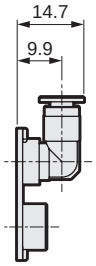

● Radial push-in fitting (facing down), single plug

● ø1/8 inch (CD3NCN)

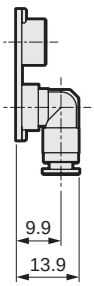

● ø5/32 inch (CD4NCN)

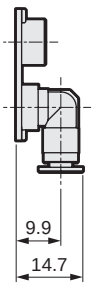

● ø1/8 inch (CD3NON)

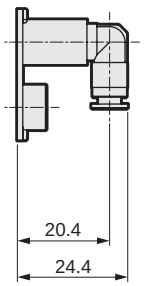

● ø5/32 inch (CD4NON)

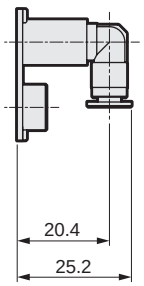

MEMO

Dimensions CAD

M4GB2-P7*

*The dimension of the dual 3-port valve integrated is the same as that of the double.

*Refer to page 754 for details on mounting holes.

● Grommet lead wire (blank)

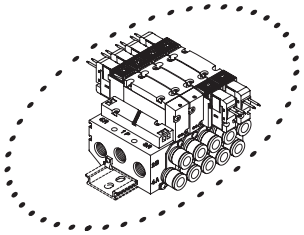

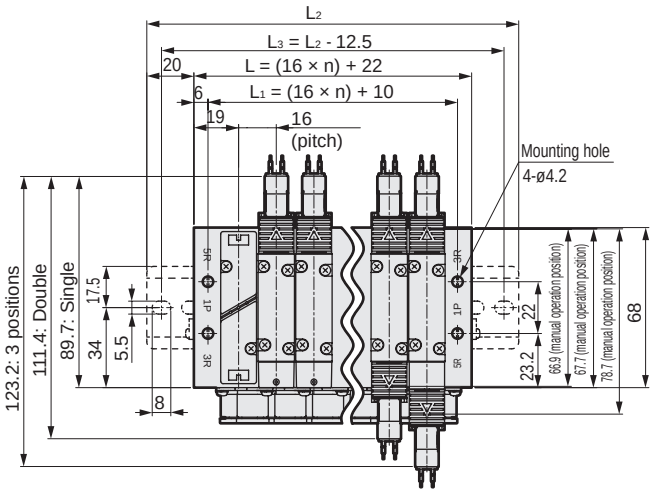

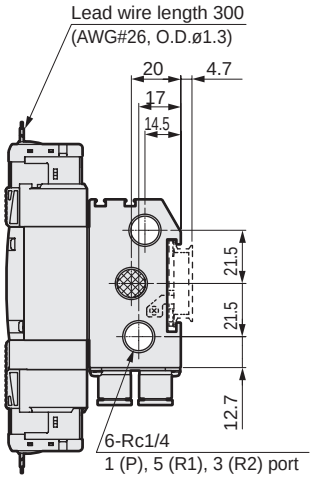

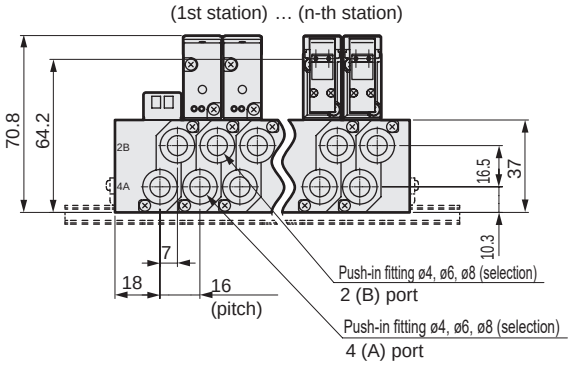

● Rc1/8 female thread (06)

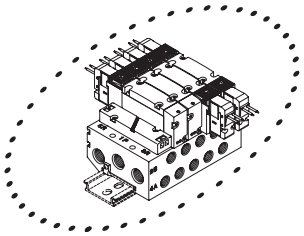

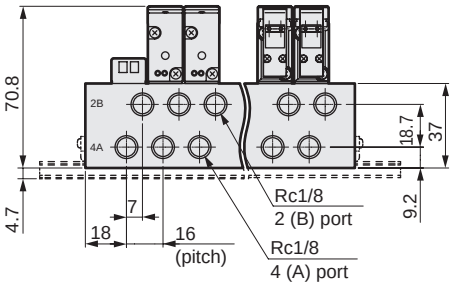

● E connector (E)

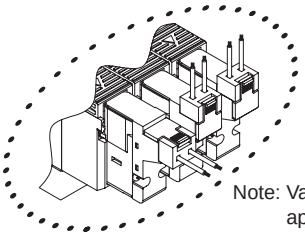

Note: Values in ( ) are applicable to AC voltages.

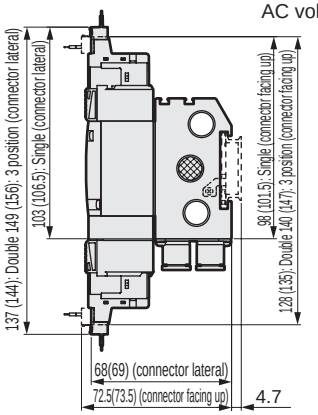

● EJ connector (E**J)

Note: Values in ( ) are applicable to AC voltages.

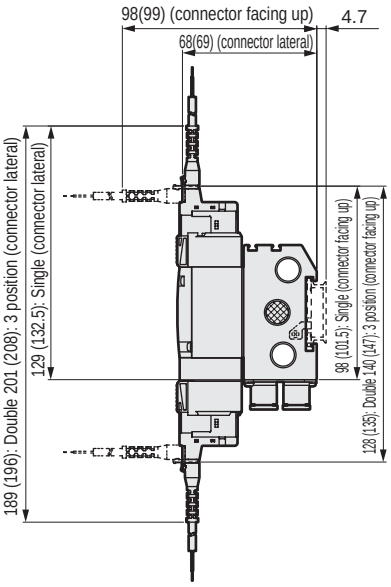

Station No.	2	3	4	5	6	7	8	9	10	11	12	13	14	15	16	17	18	19	20
L	54.0	70.0	86.0	102.0	118.0	134.0	150.0	166.0	182.0	198.0	214.0	230.0	246.0	262.0	278.0	294.0	310.0	326.0	342.0
L1	42.0	58.0	74.0	90.0	106.0	122.0	138.0	154.0	170.0	186.0	202.0	218.0	234.0	250.0	266.0	282.0	298.0	314.0	330.0
L2	100.0	112.5	137.5	150.0	162.5	175.0	200.0	212.5	225.0	250.0	262.5	275.0	287.5	312.5	325.0				
L3	87.5	100.0	125.0	137.5	150.0	162.5	187.5	200.0	212.5	237.5	250.0	262.5	275.0	300.0	312.5				

Dimensions

M4GB2-C10-P7*

Note: This is a dedicated manifold base.

*Refer to page 754 for details on mounting holes.

● Grommet lead wire (blank)

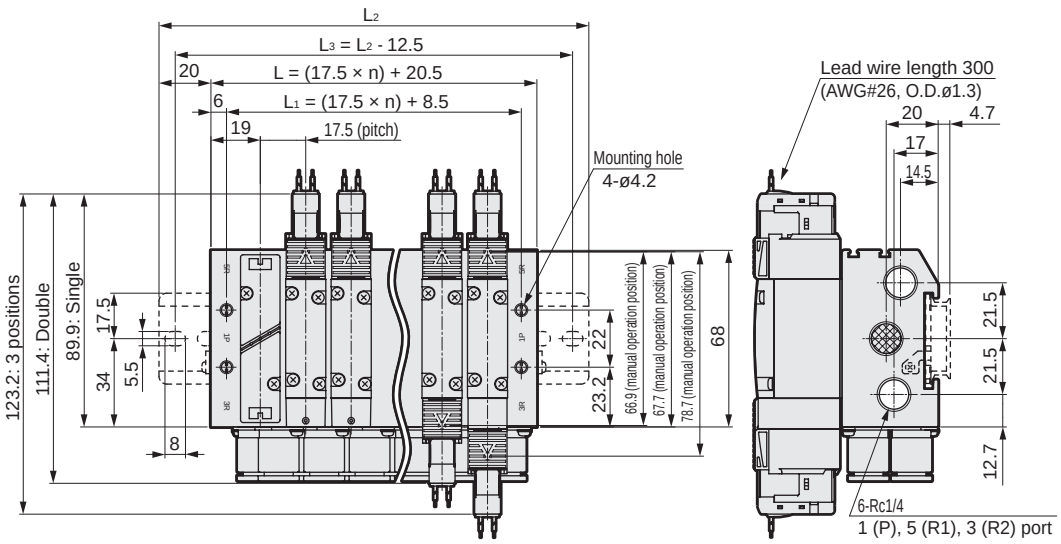

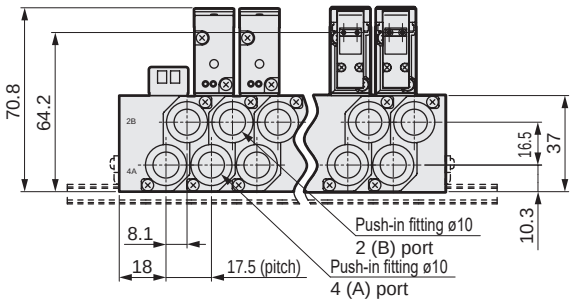

● E connector (E)

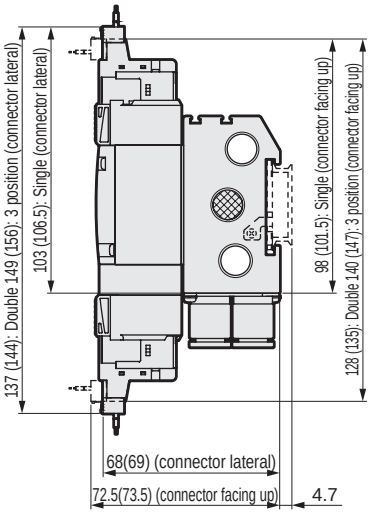

Note: Values in ( ) are for AC voltage.

● EJ connector (E**J)

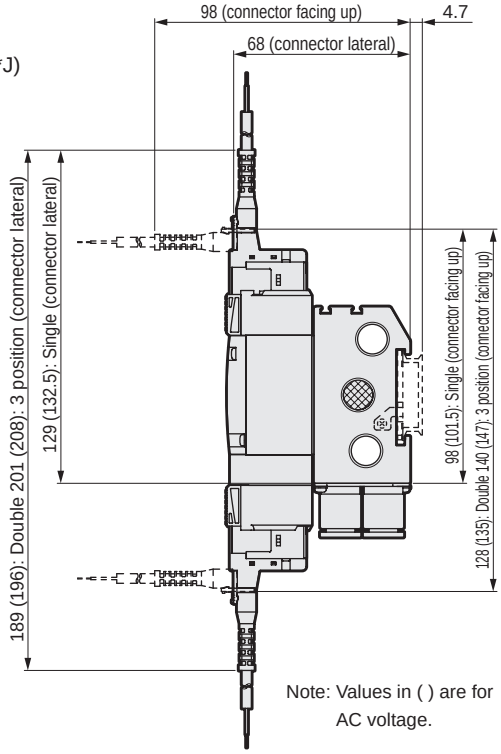

Note: Values in ( ) are for AC voltage.

Station No.	2	3	4	5	6	7	8	9	10	11	12	13	14	15	16	17	18	19	20
L	55.5	73.0	90.5	108.0	125.5	143.0	160.5	178.0	195.5	213.0	230.5	248.0	265.5	283.0	300.5	318.0	335.5	353.0	370.5
L_1	43.5	61.0	78.5	96.0	113.5	131.0	148.5	166.0	183.5	201.0	218.5	236.0	253.5	271.0	288.5	306.0	323.5	341.0	358.5
L_2	100.0	125.0	137.5	150.0	175.0	187.5	212.5	225.0	237.5	262.5	275.0	300.0	312.5	325.0					
L_3	87.5	112.5	125.0	137.5	162.5	175.0	200.0	212.5	225.0	250.0	262.5	287.5	300.0	312.5					

SCPD3
SCM
SSD2
MDC2
SMG
LCM
LCR
LCG
LCX
STM
STG
STR2
MRL2
GRC
Cylinder switch
MN3E MN4E
4GA/B
M4GA/B
MN4GA/B
F.R (module unit)
Clean F.R
Precision R
Press gauge Diff. press gauge
Electro-pneumatic R
Speed controller
Auxiliary valve
Fitting/ tube
Clean air unit
Pressure sensor
Flow rate sensor
Valve for air blow
Ending

Dimensions CAD

M4GB2-P7*

● External pilot (K)
Grommet lead wire (blank)

*Refer to page 754 for details on mounting holes.

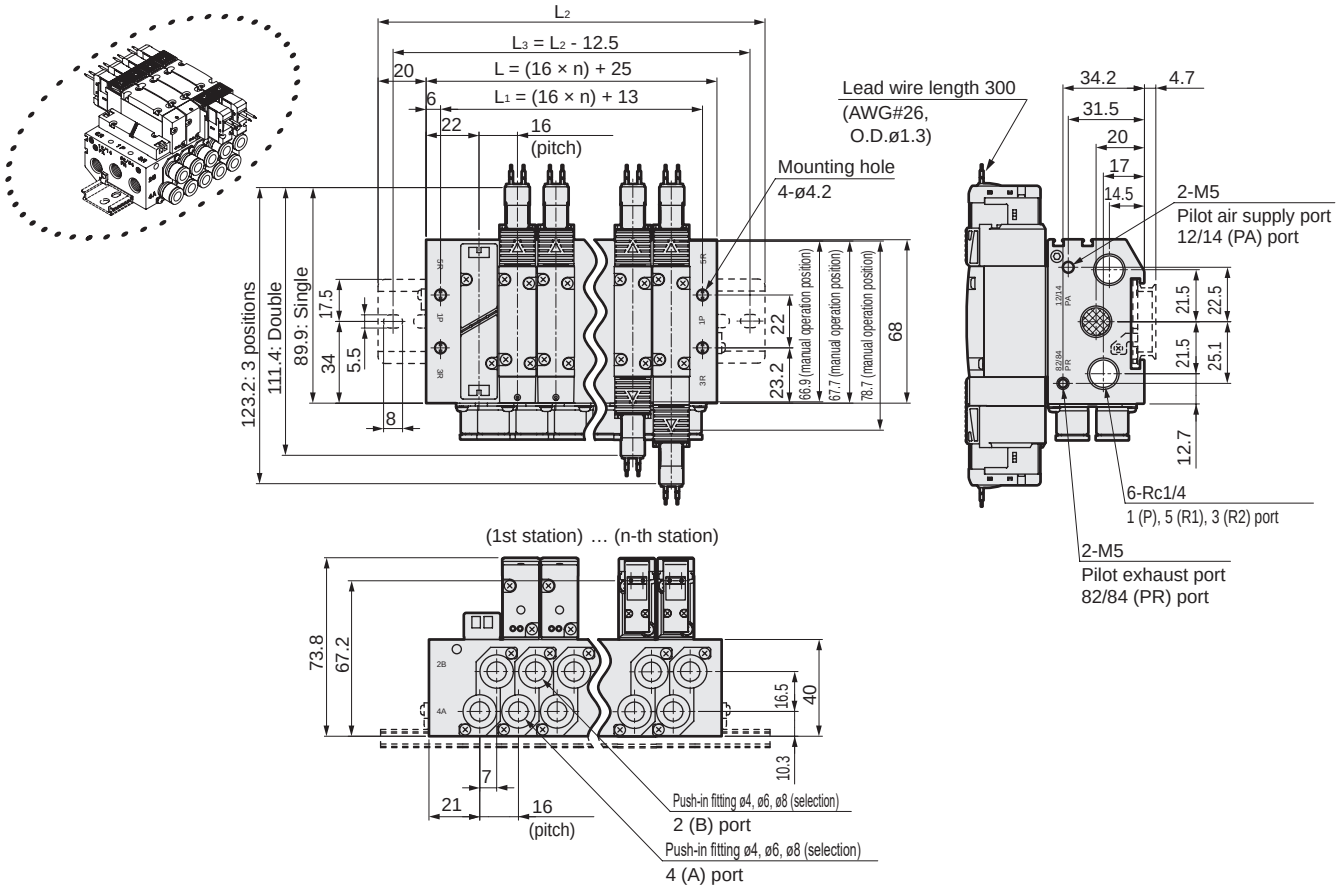

● External pilot (K)
Rc1/8 female thread (06)

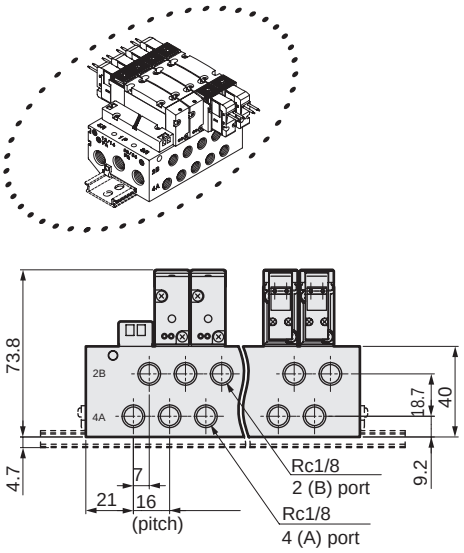

● External pilot (K)
E connector (E)

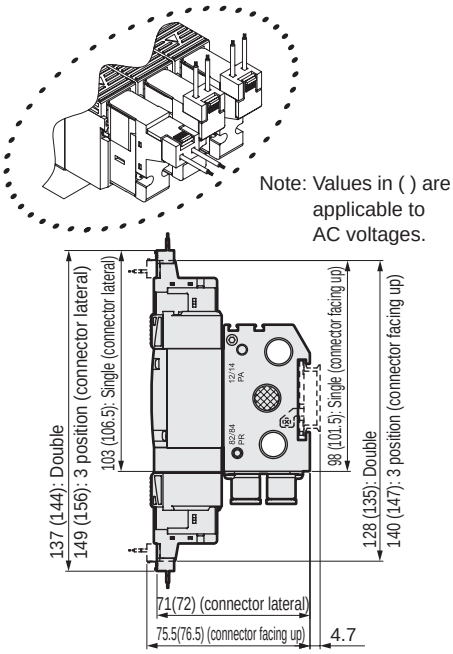

● External pilot (K)
EJ connector (E**J)

Note: Values in ( ) are applicable to AC voltages.

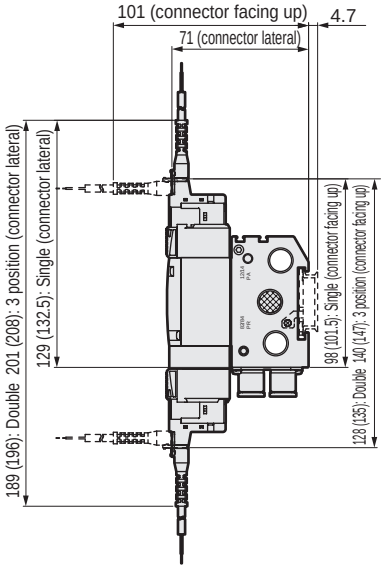

Station No.	2	3	4	5	6	7	8	9	10	11	12	13	14	15	16	17	18	19	20
L	57.0	73.0	89.0	105.0	121.0	137.0	153.0	169.0	185.0	201.0	217.0	233.0	249.0	265.0	281.0	297.0	313.0	329.0	345.0
L1	45.0	61.0	77.0	93.0	109.0	125.0	141.0	157.0	173.0	189.0	205.0	221.0	237.0	253.0	269.0	285.0	301.0	317.0	333.0
L2	100.0	125.0	137.5	150.0	162.5	187.5	200.0	212.5	225.0	250.0	262.5	275.0	300.0	312.5	325.0				
L3	87.5	112.5	125.0	137.5	150.0	175.0	187.5	200.0	212.5	237.5	250.0	262.5	287.5	300.0	312.5				

Dimensions

M4GB2-C10-K-P7*

Note: This is a dedicated manifold base.

*Refer to page 754 for details on mounting holes.

● Grommet lead wire (blank)
External pilot (K)

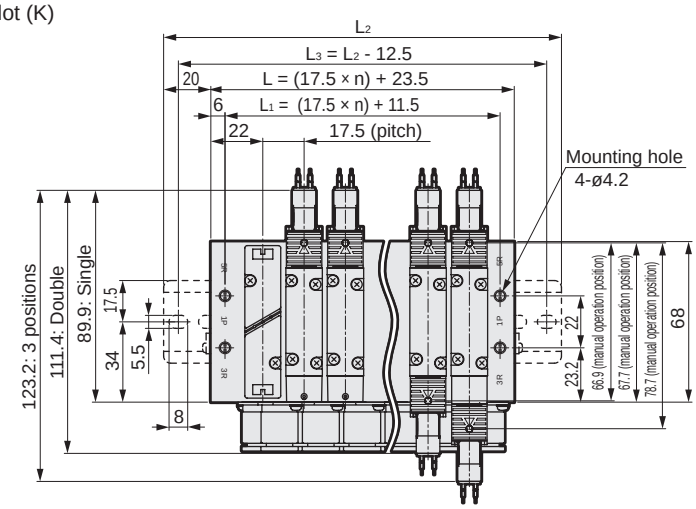

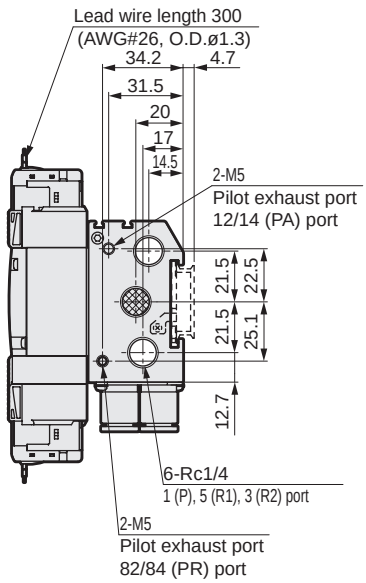

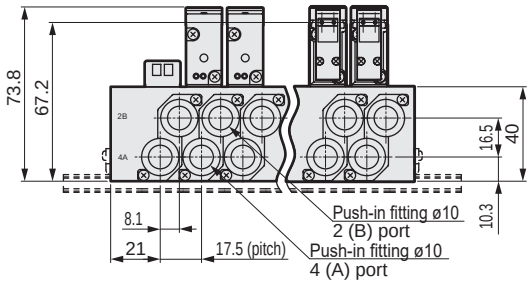

● External pilot (K)
E connector (E)

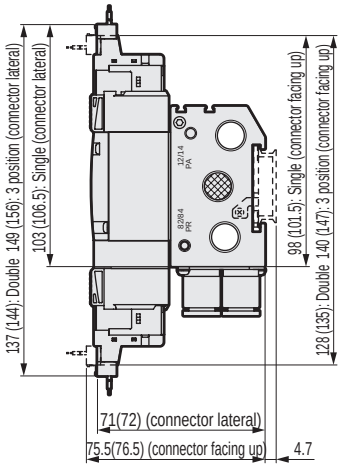

Note: Values in ( ) are for AC voltage.

● External pilot (K)
EJ connector (E**J)

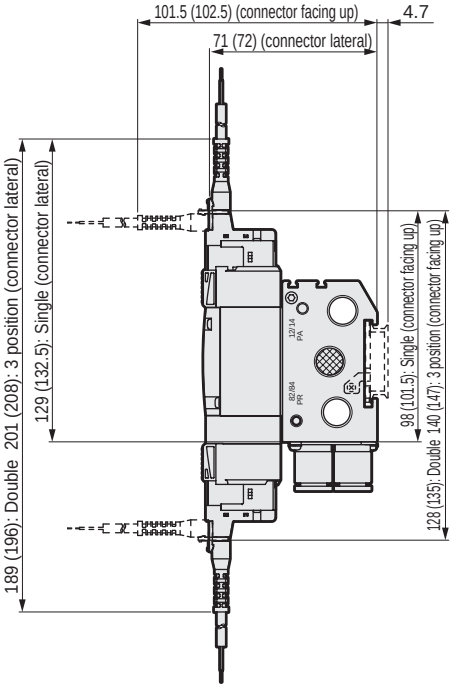

● External pilot (K)
DIN terminal box (B)

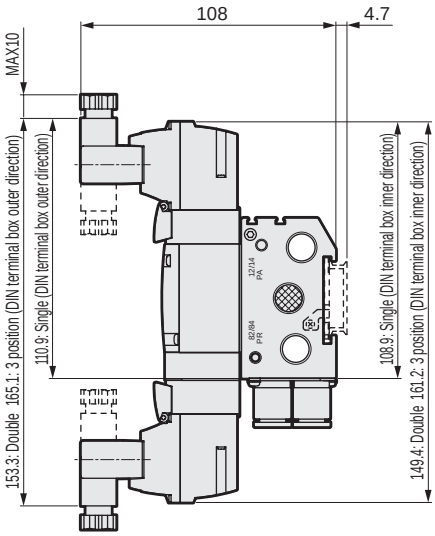

Note: Values in ( ) are for AC voltage.

Station No.	2	3	4	5	6	7	8	9	10	11	12	13	14	15	16	17	18	19	20
L	58.5	76.0	93.5	111.0	128.5	146.0	163.5	181.0	198.5	216.0	233.5	251.0	268.5	286.0	303.5	321.0	338.5	356.0	373.5
L_1	46.5	64.0	81.5	99.0	116.5	134.0	151.5	169.0	186.5	204.0	221.5	239.0	256.5	274.0	291.5	309.0	326.5	344.0	361.5
L_2	100.0	125.0	137.5	162.5	175.0	187.5	212.5	225.0	250.0	262.5	275.0	300.0	312.5	337.5	350.0				
L_3	87.5	100.0	112.5	125.0	137.5	150.0	162.5	175.0	187.5	200.0	212.5	225.0	237.5	250.0	262.5				

SCPD3
SCM
SSD2
MDC2
SMG
LCM
LCR
LCG
LCX
STM
STG
STR2
MRL2
GRC
Cylinder switch
MN3E MN4E
4GA/B
M4GA/B
MN4GA/B
F.R (module unit)
Clean F.R
Precision R
Press gauge Diff. press gauge
Electro-pneumatic R
Speed controller
Auxiliary valve
Fitting/ tube
Clean air unit
Pressure sensor
Flow rate sensor
Valve for air blow
Ending

Dimensions

● DIN terminal box (B)

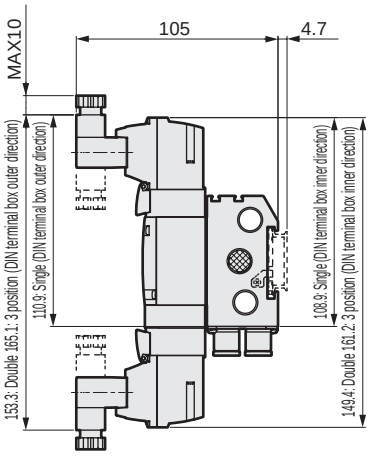

● External pilot (K)
DIN terminal box (B)

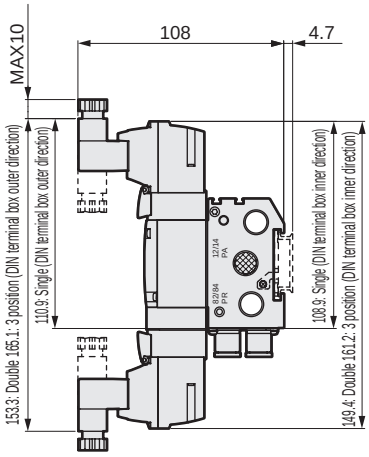

Note: The DIN terminal box assembly is shipped facing inward.

● Straight fitting

● ø4 (C4) ● ø6 (C6) ● ø8 (C8) ● ø10 (C10)

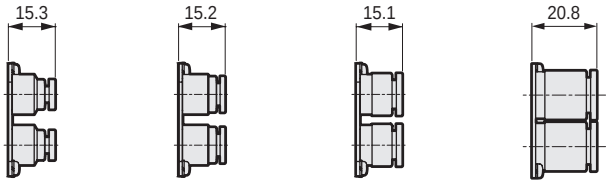

● Straight fitting, single plug

● ø4 (C4NC) ● ø6 (C6NC) ● ø8 (C8NC) ● ø10 (C10NC) ● ø4 (C4NO) ● ø6 (C6NO) ● ø8 (C8NO) ● ø10 (C10NO)

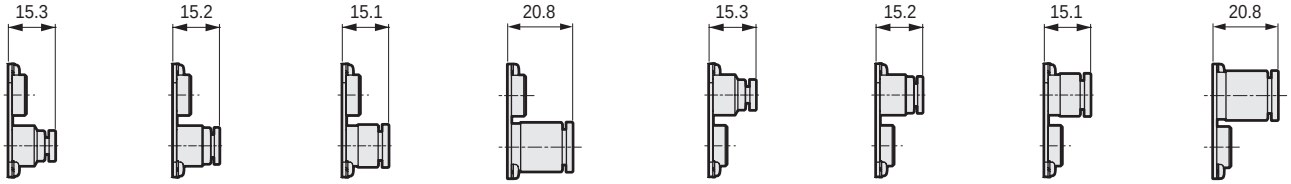

● Radial fitting (facing up)

● ø6 (CL6) ● ø8 (CL8)

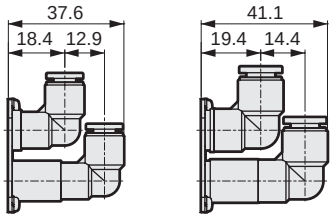

● Radial fitting (facing down)

● ø6 (CD6) ● ø8 (CD8)

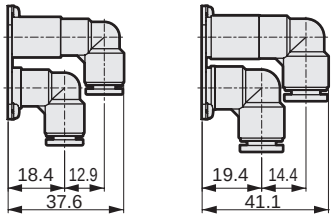

● Radial fitting (facing up), single plug

● ø6 (CL6NC) ● ø8 (CL8NC) ● ø6 (CL6NO) ● ø8 (CL8NO)

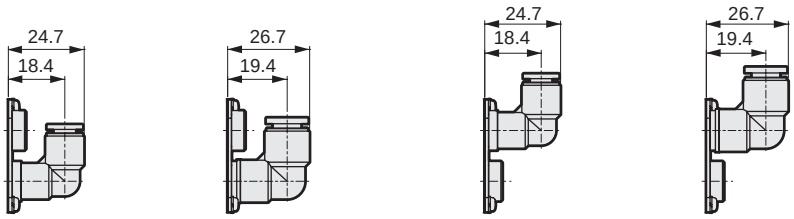

● Radial fitting (facing down), single plug

● ø6 (CD6NC) ● ø8 (CD8NC) ● ø6 (CD6NO) ● ø8 (CD8NO)

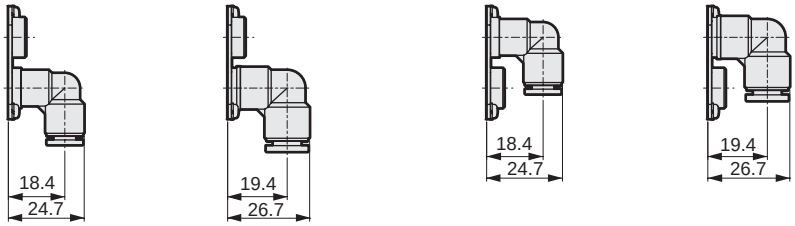

Dimensions

● Straight fitting

● ø1/4 inch (C6N)

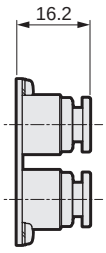

● ø5/16 inch (C8N)

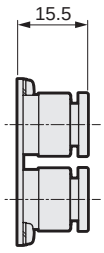

● Straight fitting, single plug

● ø1/4 inch (C6NCN)

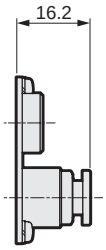

● ø5/16 inch (C8NCN)

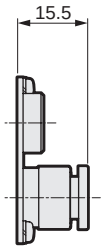

● ø1/4 inch (C6NON)

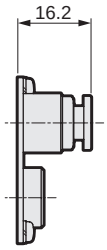

● ø5/16 inch (C8NON)

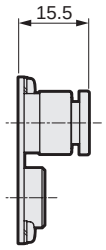

● Radial fitting (facing up)

● ø1/4 inch (CL6N)

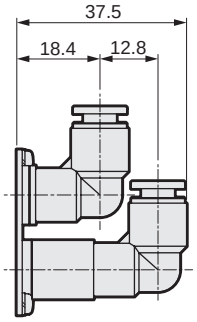

● ø5/16 inch (CL8N)

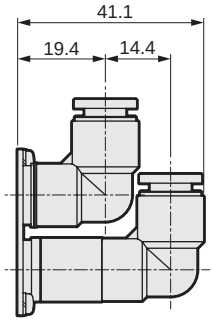

● ø1/8 inch (CD6N)

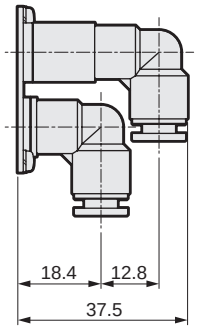

● ø5/32 inch (CD8N)

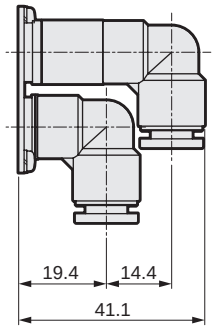

● Radial fitting (facing up), single plug

● ø1/4 inch (CL6NCN)

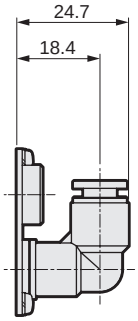

● ø5/16 inch (CL8NCN)

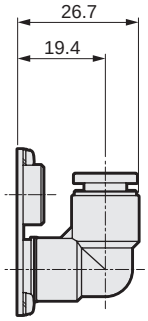

● ø1/4 inch (CL6NON)

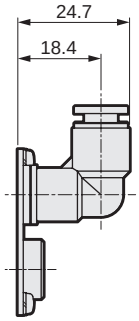

● ø5/16 inch (CL8NON)

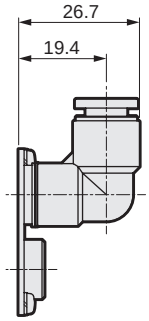

● Radial fitting (facing down), single plug

● ø1/4 inch (CD6NCN)

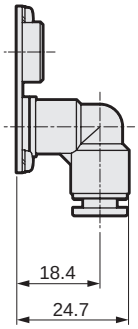

● ø5/16 inch (CD8NCN)

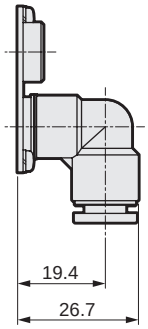

● ø1/4 inch (CD6NON)

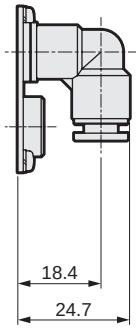

● ø5/16 inch (CD8NON)

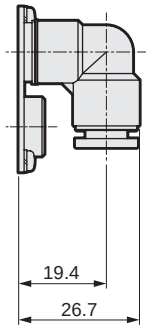

SCPD3
SCM
SSD2
MDC2
SMG
LCM
LCR
LCG
LCX
STM
STG
STR2
MRL2
GRC
Cylinder switch
MN3E MN4E
4GA/B
M4GA/B
MN4GA/B
F.R (module unit)
Clean F.R
Precision R
Press gauge Diff. press gauge
Electro-pneumatic R
Speed controller
Auxiliary valve
Fitting/ tube
Clean air unit
Pressure sensor
Flow rate sensor
Valve for air blow
Ending

Dimensions CAD

M4GB3-P7*

● Grommet lead wire (blank)

*Refer to page 754 for details on mounting holes.

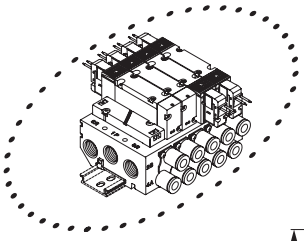

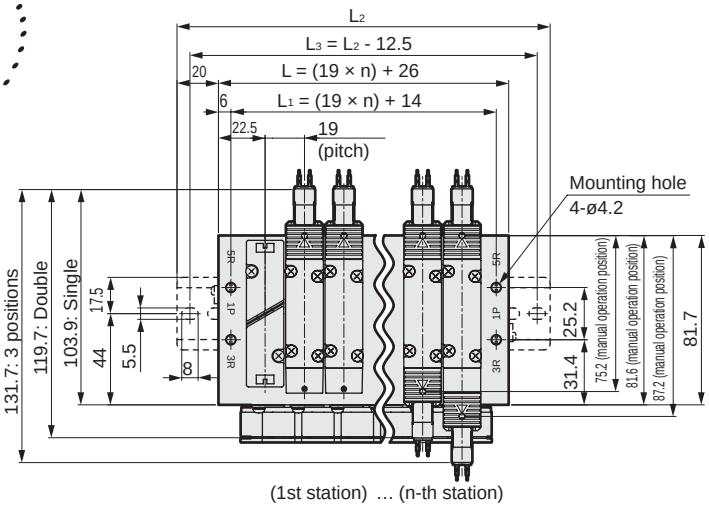

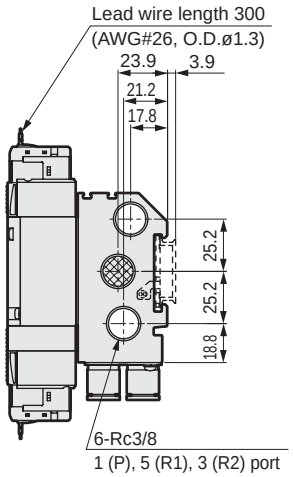

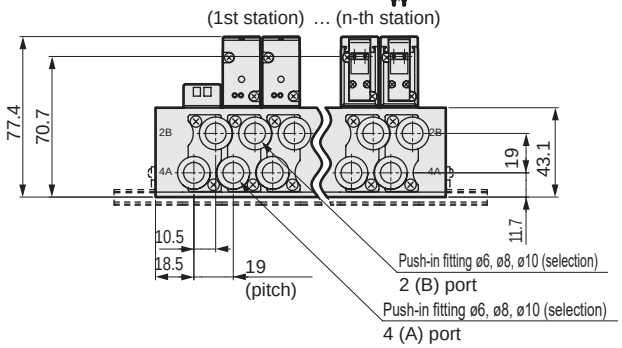

● RC1/4 female thread (08)

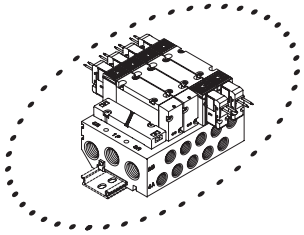

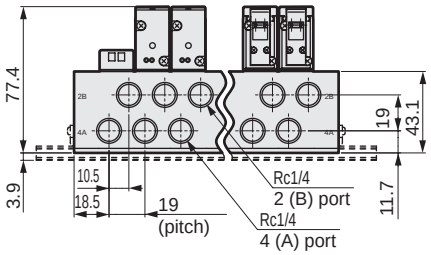

● E connector (E)

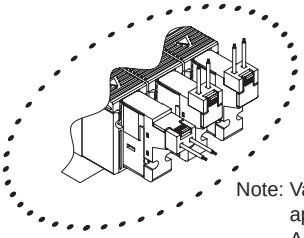

Note: Values in ( ) are applicable to AC voltages.

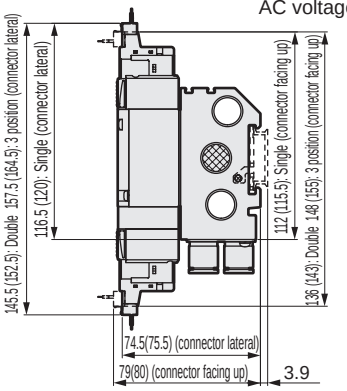

● EJ connector (E**J)

Note: Values in ( ) are applicable to AC voltages.

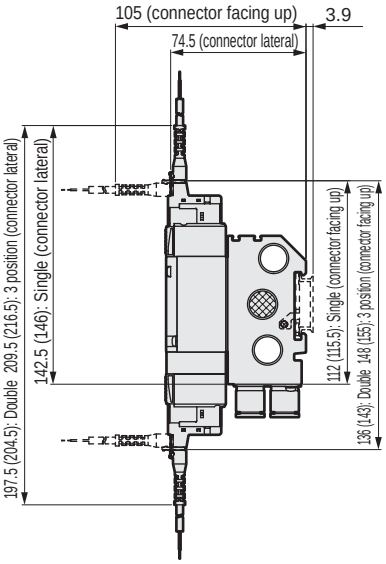

Station No.	2	3	4	5	6	7	8	9	10	11	12	13	14	15	16	17	18	19	20
L	64.0	83.0	102.0	121.0	140.0	159.0	178.0	197.0	216.0	235.0	254.0	273.0	292.0	311.0	330.0	349.0	368.0	387.0	406.0
L_1	52.0	71.0	90.0	109.0	128.0	147.0	166.0	185.0	204.0	223.0	242.0	261.0	280.0	299.0	318.0	337.0	356.0	375.0	394.0
L_2	112.5	125.0	150.0	162.5	187.5	200.0	225.0	237.5	262.5	275.0	300.0	325.0	337.5	362.5	375.0				
L_3	100.0	112.5	137.5	150.0	175.0	187.5	212.5	225.0	250.0	262.5	287.5	312.5	325.0	350.0	362.5				

Dimensions

M4GB3-P7*

*Refer to page 754 for details on mounting holes.

● External pilot (K)
Grommet lead wire (blank)

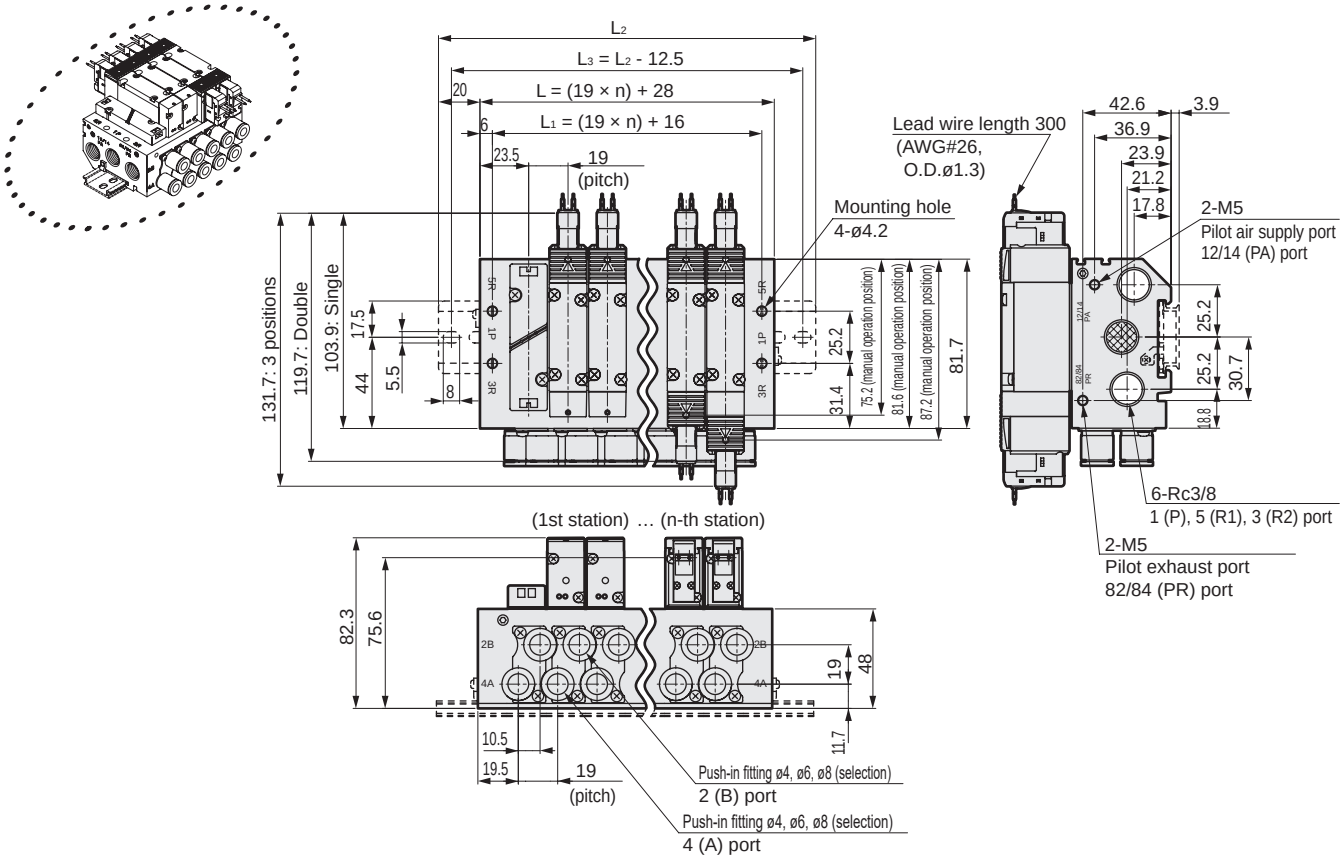

● External pilot (K)
Rc1/4 female thread (08)

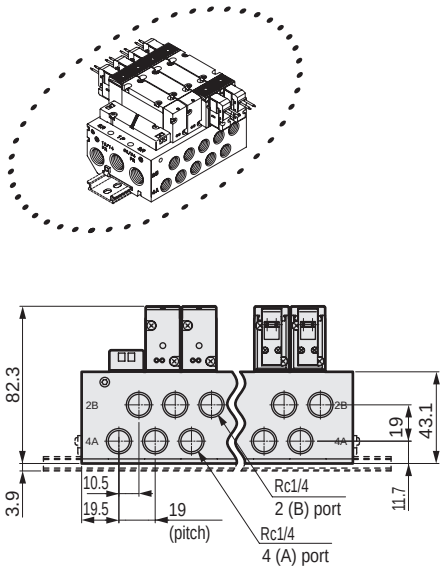

● External pilot (K)
E connector (E)

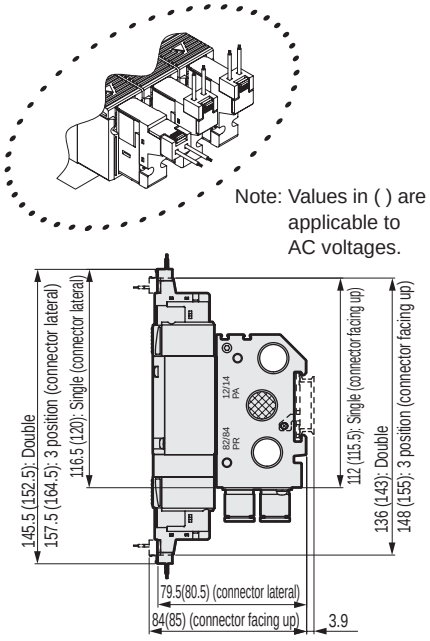

● External pilot (K)
EJ connector (E**J)

Note: Values in ( ) are applicable to AC voltages.

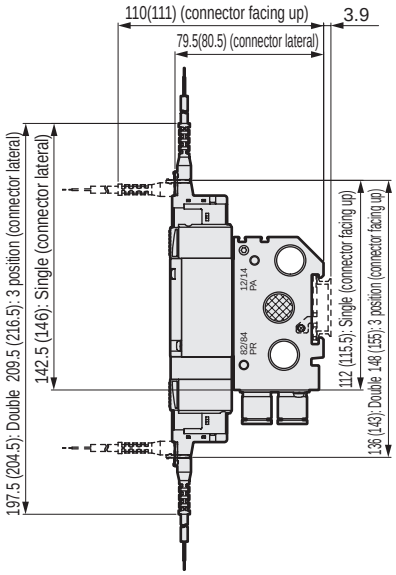

Station No.	2	3	4	5	6	7	8	9	10	11	12	13	14	15	16	17	18	19	20
L	66.0	85.0	104.0	123.0	142.0	161.0	180.0	199.0	218.0	237.0	256.0	275.0	294.0	313.0	332.0	351.0	370.0	389.0	408.0
L_1	54.0	73.0	92.0	111.0	130.0	149.0	168.0	187.0	206.0	225.0	244.0	263.0	282.0	301.0	320.0	339.0	358.0	377.0	396.0
L_2	112.5	125.0	150.0	175.0	187.5	212.5	225.0	250.0	262.5	287.5	300.0	325.0	337.5	362.5	375.0				
L_3	100.0	112.5	137.5	162.5	175.0	200.0	212.5	237.5	250.0	275.0	287.5	312.5	325.0	350.0	362.5				

SCPD3
SCM
SSD2
MDC2
SMG
LCM
LCR
LCG
LCX
STM
STG
STR2
MRL2
GRC
Cylinder switch
MN3E MN4E
4GA/B
M4GA/B
MN4GA/B
F.R (module unit)
Clean F.R
Precision R
Press gauge Diff. press gauge
Electro-pneumatic R
Speed controller
Auxiliary valve
Fitting/ tube
Clean air unit
Pressure sensor
Flow rate sensor
Valve for air blow
Ending

Dimensions

● DIN terminal box (B)

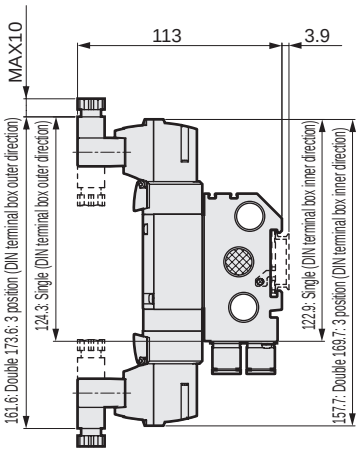

● External pilot (K)
DIN terminal box (B)

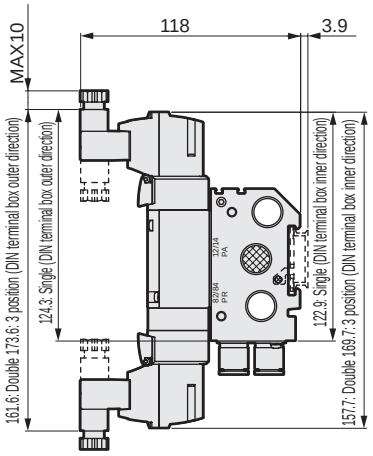

Note: The DIN terminal box assembly is shipped facing inward.

● Straight fitting

● ø6 (C6) ● ø8 (C8) ● ø10 (C10)

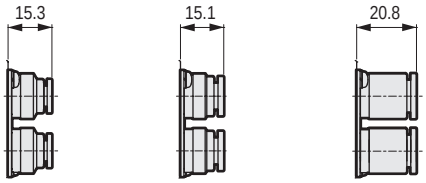

● Straight fitting, single plug

● ø6 (C6NC) ● ø8 (C8NC) ● ø10 (C10NC) ● ø6 (C6NO) ● ø8 (C8NO) ● ø10 (C10NO)

● Radial fitting (facing up)

● ø8 (CL8) ● ø10 (CL10)

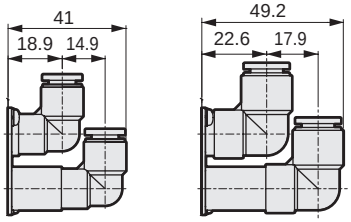

● Radial fitting (facing down)

● ø8 (CD8) ● ø10 (CD10)

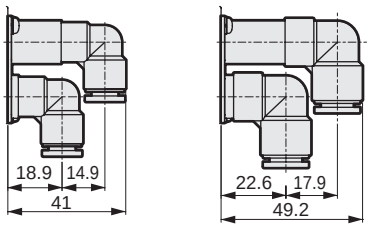

● Radial fitting (facing up), single plug

● ø8 (CL8NC) ● ø10 (CL10NC) ● ø8 (CL8NO) ● ø10 (CL10NO)

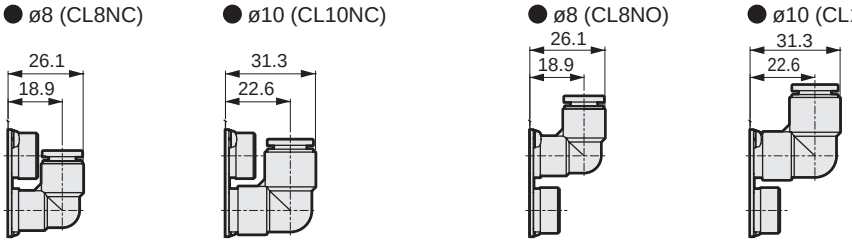

● Radial fitting (facing down), single plug

● ø8 (CD8NC) ● ø10 (CD10NC) ● ø8 (CD8NO) ● ø10 (CD10NO)

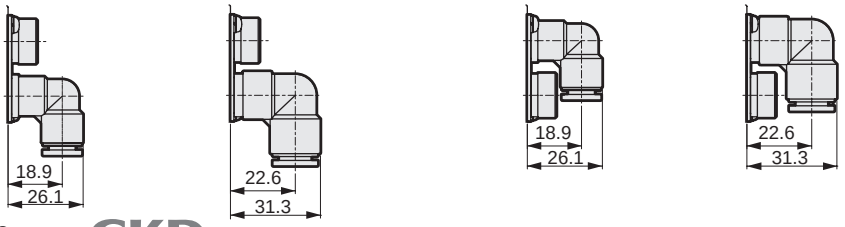

Dimensions

● Straight fitting

● ø5/16 inch (C8N)

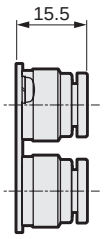

● ø3/8 inch (C10N)

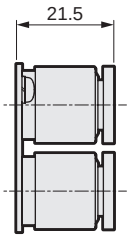

● Straight fitting, single plug

● ø5/16 inch (C8NCN)

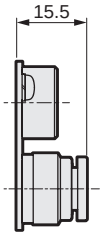

● ø3/8 inch (C10NCN)

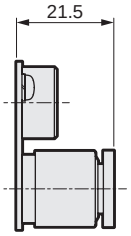

● ø5/16 inch (C8NON)

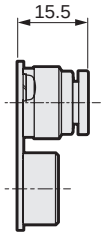

● ø3/8 inch (C10NON)

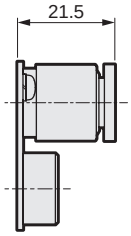

● Radial fitting (facing up)

● ø5/16 inch (CL8N)

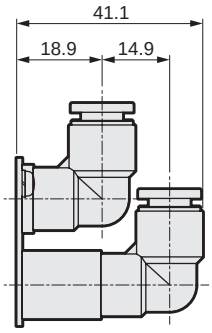

● ø3/8 inch (CL10N)

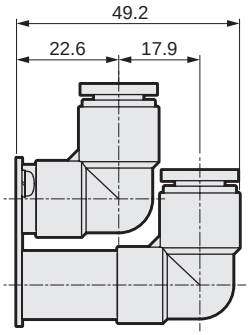

● ø5/16 inch (CD8N)

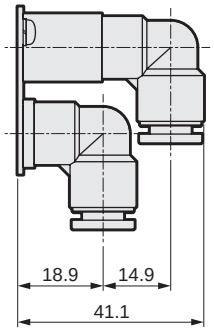

● ø3/8 inch (CD10N)

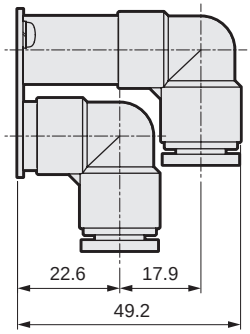

● Radial fitting (facing up), single plug

● ø5/16 inch (CL8NCN)

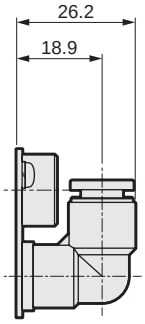

● ø3/8 inch (CL10NCN)

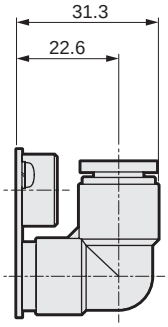

● ø5/16 inch (CL8NON)

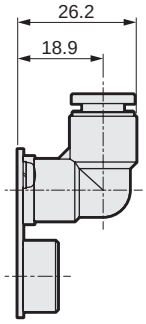

● ø3/8 inch (CL10NON)

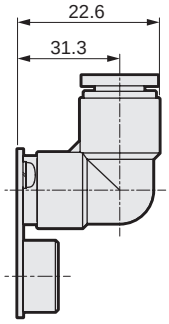

● Radial fitting (facing down), single plug

● ø5/16 inch (CD8NCN)

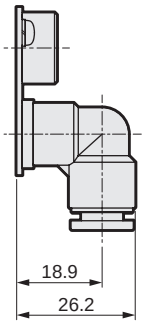

● ø3/8 inch (CD10NCN)

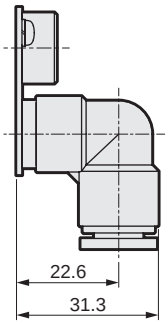

● ø5/16 inch (CD8NON)

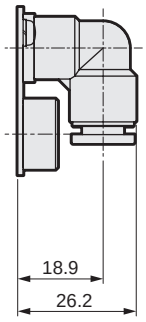

● ø3/8 inch (CD10NON)

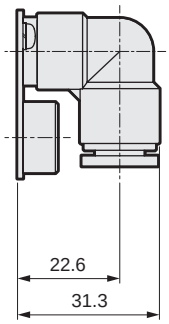

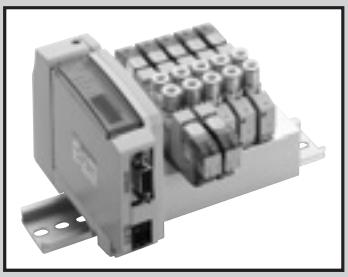

Reduced wiring manifold
Body piping
Direct mount DIN rail mount

M3GA1/2/3-T*(D) Series
M4GA1/2/3-T*(D) Series

● Applicable cylinder bore size: ø20 to ø100

RoHS CAD

JIS symbol

● 3-port valve
2-position single NC

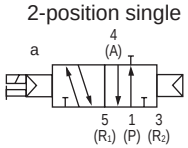

2-position single NO

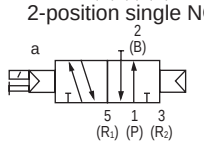

● Dual 3-port valve integrated
(A side valve: NC, B side valve: NC)

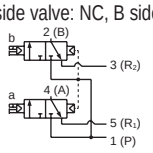

(A side valve: NC, B side valve: NO)

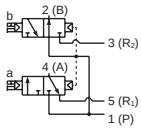

(A side valve: NO, B side valve: NC)

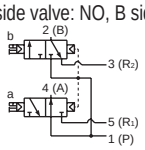

(A side valve: NO, B side valve: NO)

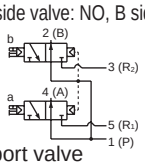

● 5 port valve
2-position single

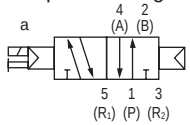

2-position double

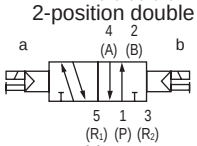

3-position
All ports closed

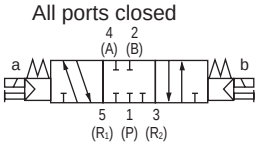

3-position A/B/R connection

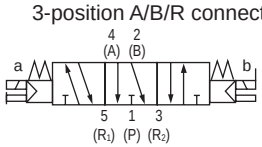

3 positions P/A/B connection

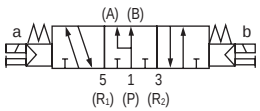

Structure and material restriction

	Structure	Material restriction			Model No.
P7 Series	Dust generation preventing				– P70
	Dust generation preventing	Copper-based materials prohibited	Silicon-based materials prohibited	Halogen-based materials prohibited (fluorine, chlorine, bromine)	– P74 Custom order product

Manifold common specifications

Descriptions		
Manifold		Reduced wiring integrated base
Mounting method		Direct mount DIN rail mount
Supply and exhaust method		Common supply/common exhaust (With internal exhaust check valve)
Pilot exhaust method	Internal pilot	Main valve/pilot valve common exhaust (Pilot exhaust check valve integrated)
	External pilot	Main valve/pilot valve individual exhaust
Piping direction		Top piping
Valve and operation		Pilot operated soft spool valve
Working fluid		Compressed air
Max. working pressure MPa		0.7
Min. working pressure MPa		0.2 (*3)
Proof pressure MPa		1.05
Ambient temperature °C		-5 to 55 (no freezing)
Fluid temperature °C		5 to 55
Manual operating device		Common for non-locking/locking (standard)
Lubrication (*1)		Not required
Degree of protection (*2)		Dust proof
Vibration resistance m/s^2		50 or less
Shock resistance m/s^2		300 or less
Atmosphere		Containing corrosive gas is not permissible

*1: Use the turbine oil Class 1 ISO VG32 for lubrication. Excessive or intermittent lubrication results in unstable operation.
*2: Avoid water drops or oil, etc. during use.
*3: The working pressure range is 0 to 0.7 MPa when the external pilot (option Code: K) is selected. Set the external pilot pressure between 0.2 and 0.7 MPa.

Electrical specifications

Descriptions				
		T1□, T30□, T5□		T6G1, T8□
Rated voltage V		24 VDC	12 VDC	24 VDC
Voltage fluctuation range (*4)		±10%		+10%, -5%
Holding current A	Standard	0.017	0.034	0.017
	Low exoergic/energy-saving circuit built-in	0.005	0.010	0.005
Power consumption W	Standard	0.4		
	Low exoergic/energy-saving circuit built-in	0.1		
Thermal class		B		
Surge suppressor (*5)		Zener diode		
Indicator		LED		

*4: As for T6G1 and T8□ (serial transmission), because a voltage drop may occur due to the internal circuit design, be careful to check for the voltage fluctuation range.
*5: When selecting the type of low-heat -generating/ power-saving circuit built-in or surgeless, a diode is used.

Common specifications

Descriptions		M3GA1/M4GA1	M3GA2/M4GA2	M3GA3/M4GA3
Port size	A/B port	Barbed fitting ø1.8 Push-in fitting ø1.8, ø4, ø6 M5	Push-in fitting ø4, ø6, ø8 Rc1/8	Push-in fitting ø6, ø8, ø10 Rc1/4
	P/R1/R2 port	Rc1/8	Rc1/4	Rc3/8

T1□, T30□, T5□

Descriptions		M3GA1/M4GA1		M3GA2/M4GA2		M3GA3/M4GA3	
		Direct mount	DIN rail mount	Direct mount	DIN rail mount	Direct mount	DIN rail mount
Max. station number	Standard (internal pilot)	20 stations	16 stations	20 stations	16 stations	16 stations	
	External pilot	12 stations					
Manifold base weight calculation formula (n: station No.) g	Standard	29n + 215	31n + 228	54n + 264	56n + 297	84n + 320	86n + 354
	External pilot	44n + 334	46n + 347	96n + 433	96n + 468	149n + 554	151n + 583

T6G1

Descriptions		M3GA1/M4GA1	M3GA2/M4GA2	M3GA3/M4GA3
		DIN rail mount	DIN rail mount	DIN rail mount
Max. station number	Standard (internal pilot)	16 stations	16 stations	16 stations
	External pilot	12 stations		
Manifold base weight calculation formula (n: station No.) g	Standard	31n + 375	56n + 444	86n + 501
	External pilot	46n + 494	98n + 615	151n + 731

T8□

Descriptions		M3GA1/M4GA1		M3GA2/M4GA2		M3GA3/M4GA3	
		Direct mount	DIN rail mount	Direct mount	DIN rail mount	Direct mount	DIN rail mount
Max. station number	Standard (internal pilot)	20 stations	16 stations	20 stations	16 stations	16 stations	
	External pilot	12 stations					
Manifold base weight calculation formula (n: station No.) g	Standard	50n + 305	52n + 332	57n + 259	60n + 290	150n + 384	153n + 416
	External pilot	51n + 313	54n + 340	102n + 336	105n + 368	169n + 417	173n + 449

Manifold base weight stands for a value for the screw connection specifications when a DIN rail, electrical component block, or slave unit is equipped. The max. station number of the manifold is limited by the max. number of solenoid for each of the following wiring specifications.

Flow characteristics

Model No.	Solenoid position		P → A/B C [dm³/(s·bar)]	P → A/B b	A/B → R1/R2 C [dm³/(s·bar)]	A/B → R1/R2 b
M3GA1 M4GA1	Dual 3-port valve integrated		0.86	0.31	1.1 (0.66)	0.19 (0.22)
	2-position		0.99	0.20	1.2 (0.70)	0.20 (0.12)
	3-position	All ports closed	0.94	0.23	1.1 -	0.20 -
		ABR connection	0.93	0.18	1.3 (0.70)	0.23 (0.02)
		PAB connection	1.1	0.28	1.1 -	0.23 -
M3GA2 M4GA2	Dual 3-port valve integrated		1.7	0.40	2.3 (1.7)	0.29 (0.32)
	2-position		2.3	0.36	2.9 (1.7)	0.24 (0.33)
	3-position	All ports closed	2.1	0.35	2.5 -	0.32 -
		ABR connection	2.2	0.37	2.9 (1.8)	0.32 (0.29)
		PAB connection	2.4	0.34	2.5 -	0.33 -
M3GA3 M4GA3	2-position		3.2	0.37	3.8 (2.5)	0.13 (0.28)
	3-position	All ports closed	2.9	0.35	3.3 -	0.35 -
		ABR connection	3.0	0.34	3.8 (2.6)	0.12 (0.27)
		PAB connection	3.3	0.30	3.3 -	0.32 -

*1: Effective cross-sectional area S and sonic conductance C are converted as S ≈ 5.0 × C.
*2: Values in ( ) apply when the exhaust check valve is attached.

Wiring specifications

Descriptions	T10□ Common terminal block	T11□ Common terminal block	T30□ D sub-connector	T50□ Flat cable 20 pin	T51□ Flat cable 20 pin	T52□ Flat cable 10 pin	T53□ Flat cable 26 pin
Connector and terminal block specifications	M3 thread tightening 18 terminals	Clamping 26 terminals	D sub-connector 25 pin	MIL-C-83503 standards conformed pressure welding socket 20 pin	MIL-C-83503 standards conformed pressure welding socket 20 pin	MIL-C-83503 standards conformed pressure welding socket 10 pin	MIL-C-83503 standards conformed pressure welding socket 26 pin
Max. number of solenoid	16 point	24 point	24 point	16 point	18 point	8 point	24 point
Manifold internal wiring	Details on page 714 to 721						

Electric block position
Blank : Left side
R : Right side

Left side: T□

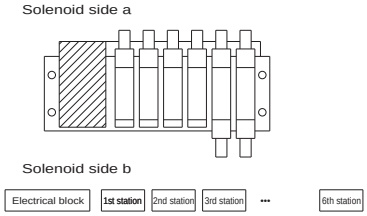

Right side: T□R

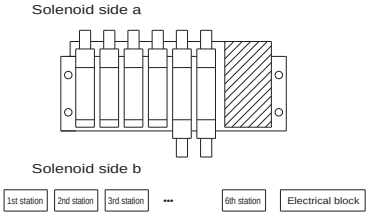

Arrangement
Blank : Standard sequential
W : Double wiring

(Example) T50□

Manifold specifications

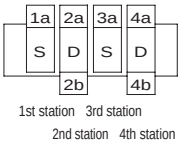

Standard wiring (sequential): Blank

Connector pin No.	1	2	3	4	5	6
Valve solenoid No.	1a	2a	2b	3a	4a	4b

Double wiring: W

Connector pin No.	1	2	3	4	5	6	7	8
Valve solenoid No.	1a	Void	2a	2b	3a	Void	4a	4b

Serial transmission slave unit specifications

Download the communication configuration file from the CKD website (https://www.ckd.co.jp/en/).

Item		T6G1
Network name		CC-Link ver 1.10
Power supply voltage	Unit side	24 VDC ±10%
	Valve side	24 VDC +10% -5%
Current consumption	Unit side	100 mA or less (when all output points are ON)
	Valve side	15 mA or less (when all output points are OFF)
Output points		16 points
Occupied number		1 station
Operation display		LED (power and communication status)

Serial transmission slave unit specifications

Item		T8G1 T8G2	T8GP1 T8GP2	T8P1 T8P2	T8PP1 T8PP2	T8EC1 T8EC2	T8ECP1 T8ECP2	T8EN1 T8EN2	T8ENP1 T8ENP2	T8D1 T8D2	T8DP1 T8DP2	T8EB1 T8EB2	T8EBP1 T8EBP2	T8EF1 T8EF2	T8EFP1 T8EFP2	T8EP1 T8EP2	T8EPP1 T8EPP2	T8KC1 T8KC2	T8KCP1 T8KCP2
Communication system name		CC-Link ver1.10		PROFIBUS-DP (V0)		EtherCAT		EtherNet/IP		DeviceNet		CC-Link IEF Basic		CC-Link IE Field		PROFINET		IO-LINK	
Power supply voltage	Unit side	24 VDC ±10% (*Only T8D is 11 to 25 VDC)																	
	Valve side	24 VDC + 10%, -5%																	
Current consumption	Unit side	60 mA or less (when all output points are ON)		60 mA or less (when all output points are ON)		110 mA or less (when all output points are ON)		120 mA or less (when all output points are ON)		70 mA or less (when all output points are ON)		130 mA or less (when all output points are ON)		140 mA or less (when all output points are ON)		130 mA or less (when all output points are ON)		50 mA or less (when all output points are ON)	
	Valve side	T8□1: 15 mA or less T8□2: 20 mA or less (when all output points are ON) Load current is not included								15 mA or less (when all output points are ON) Load current is not included									
Output points		T8□1: 16 points, T8□2: 32 points																	
Occupied number		1 station																	
Operation display		LED (power and communication status)																	
Output style		NPN output	PNP output	NPN output	PNP output	NPN output	PNP output	NPN output	PNP output	NPN output	PNP output	NPN output	PNP output	NPN output	PNP output	NPN output	PNP output	NPN output	PNP output

M$^{3}_{4}$GA1/2/3-T*(D) Series

Reduced wiring manifold; body piping

How to order

Manifold model No.

M 4GA1 1 0R - C6 - T30 W H D - ○ - 3 - P70

3-port manifold model No.

M 3GA1 1 0R - C6 - T30 W H D - ○ - 3 - P70

● Discrete valve for mounting base

4GA1 1 9R - C6 - A2N ○ H —— 3 - P70

● 3-port discrete valve for mounting base

3GA1 1 9R - C6 - A2N ○ H —— 3 - P70

Ⓐ Model No.

Ⓑ Solenoid position

Ⓒ Port size

"A2N" indicates the A type (facing down) connector with a lamp/ surge suppressor and no lead wire.

Ⓓ Reduced wiring
Zener diode is used for a surge suppressor.

Ⓔ Terminal and connector pin wiring

Ⓕ Option

Ⓖ Mount

Ⓗ Station No.

Ⓘ Voltage

Ⓙ Clean specs.

● Refer to page 717 for the model No. of cables with a D sub-connector cable.
● Refer to page 713 for the model No. of the cable for a flat cable connector.

Precautions for model No. selection

*1: Select M4GA*80R when mixing with the 3, 5-port valves. Select M3GA*80R when mixing with the masking plate.
*2: Combinations with an external pilot (K) are not supported. Dimensions are the same as the respective 2-position double solenoid.
*3: The push-in fitting cannot be mixed with the discrete valve's 4 (A) or 2 (B) port.
*4: Blank ... Wired based on the type of valve used.
W* ... Wired for the double solenoid regardless of the type of valve used.
***5: For the single type, a spare wiring (A-type socket assembly) is attached on the cap side.**
For the discrete valve (A2N), a holder for holding the socket assembly is attached. Refer to page 596 for details.

*Always indicate "manifold specifications" (page 609 to 623).

Code	Content		Ⓐ Model No. 3GA1	3GA2	3GA3	4GA1	4GA2	4GA3
Ⓑ Solenoid position								
1	2-position single					●	●	●
2	2-position double					●	●	●
3	3-position all ports closed					●	●	●
4	3-position ABR connection					●	●	●
5	3-position P/A/B connection					●	●	●
1	2-position single normally closed	(*1)	●	●	●			
11	2-position single normally open	(*1)	●	●	●			
66	Dual 3-port valve integrated (*1, *2)	A side valve: Normally closed B side valve: Normally closed	●	●				
67		A side valve: Normally closed B side valve: Normally open	●	●				
76		A side valve: Normally open B side valve: Normally closed	●	●				
77		A side valve: Normally open B side valve: Normally open	●	●				
8	Mixed manifold (In case of multiple solenoid positions)		●	●	●	●	●	●
Ⓒ Port size								
Port	4 (A)/2 (B) port		P/R1/R2 port (2)=Rc1/8 (3)=Rc1/4 (4)=Rc3/8					
CF	ø1.8 barbed fitting applicable tube UP-9102-**)		(2)			(2)		
C18	ø1.8 push-in fitting (applicable tube UP-9402-**)		(2)			(2)		
C4	ø4 push-in fitting		(2)	(3)		(2)	(3)	
C6	ø6 push-in fitting		(2)	(3)	(4)	(2)	(3)	(4)
C8	ø8 push-in fitting			(3)	(4)		(3)	(4)
C10	ø10 push-in fitting				(4)			(4)
CX	Push-in fitting mix	(*3)	(2)	(3)	(4)	(2)	(3)	(4)
M5	M5		(2)			(2)		
06	Rc1/8			(3)			(3)	
08	Rc1/4				(4)			(4)
Port	4 (A)/2 (B) port		P/R1/R2 port (5)=1/8NPT (6)=1/4NPT (7)=3/8NPT					
C3N	ø1/8" push-in fitting		⑤			⑤		
C4N	ø5/32" push-in fitting		⑤			⑤		
C6N	ø1/4" push-in fitting			⑥			⑥	
C8N	ø5/16" push-in fitting			⑥	⑦		⑥	⑦
C10N	ø3/8" push-in fitting				⑦			⑦
CXN	Push-in fitting mix	(*3)	⑤	⑥	⑦	⑤	⑥	⑦
M5N	M5		⑤			⑤		
O6N	NPT1/8			⑥			⑥	
O8N	NPT1/4	(*4)			⑦			⑦
Port	4 (A)/2 (B) port		P/R1/R2 port (2)=Rc1/8 (3)=Rc1/4 (4)=Rc3/8					
C4G	ø4 push-in fitting		⑧	⑨		⑧	⑨	
C6G	ø6 push-in fitting		⑧	⑨		⑧	⑨	
C8G	ø8 push-in fitting			⑨	⑩		⑨	⑩
C10G	ø10 push-in fitting				⑩			⑩
CXG	Push-in fitting mix	(*3)	⑧	⑨	⑩	⑧	⑨	⑩
M5G	M5		⑧			⑧		
O6G	G1/8			⑨			⑨	
O8G	G1/4				⑩			⑩
Ⓓ Reduced wiring (lamp and surge suppressor provided as standard)								
Refer to the next page for electrical connections.								
Ⓔ Terminal and connector pin wiring								
Blank	Standard wiring	(*4)	●	●	●	●	●	●
W	Double wiring	(*4)	●	●	●	●	●	●
W1	Double wiring (with single spare wiring)	(*4, *5)	●	●	●	●	●	●
Ⓕ Option								
Refer to the next page for options.								
Ⓖ Mount								
Blank	Direct mount		●	●	●	●	●	●
D	DIN rail mount		●	●	●	●	●	●
Ⓗ Station No.								
2	2 stations		●	●	●	●	●	●
to	to							
20	Refer to page 540 for the max. station number per port size.							
Ⓘ Voltage								
3	24 VDC		●	●	●	●	●	●
4	12 VDC		●	●	●	●	●	●

Ⓙ Clean room specifications (*12, 13, 14)

	Structure	Material restriction						
P70	Exhaust treatment	-	●	●	●	●	●	●
P74	Exhaust treatment	Copper-/silicon-/halogen-based materials (fluorine, chlorine, bromine) are prohibited	○	○	○	○	○	○

is not available.

			Ⓐ Model No.					
			3GA1	3GA2	3GA3	4GA1	4GA2	4GA3
Ⓓ Reduced wiring (lamp and surge suppressor provided as standard) 12/24 VDC								
T10	Common terminal block (M3 thread)	Left side specifications	●	●	●	●	●	●
T10R		Right side specifications	●	●	●	●	●	●
T11	Common terminal block (clamping)	Left side specifications	●	●	●	●	●	●
T11R		Right side specifications	●	●	●	●	●	●
T30	D sub-connector	Left side specifications	●	●	●	●	●	●
T30R		Right side specifications	●	●	●	●	●	●
T50	20 pin flat cable connector (with power supply terminal)	Left side specifications	●	●	●	●	●	●
T50R		Right side specifications	●	●	●	●	●	●
T51	20 pin flat cable connector (without power supply terminal)	Left side specifications	●	●	●	●	●	●
T51R		Right side specifications	●	●	●	●	●	●
T52	10 pin flat cable connector (without power supply terminal)	Left side specifications	●	●	●	●	●	●
T52R		Right side specifications	●	●	●	●	●	●
T53	26 pin flat cable connector (without power supply terminal)	Left side specifications	●	●	●	●	●	●
T53R		Right side specifications	●	●	●	●	●	●
Ⓓ Serial transmission (lamp and surge suppressor provided as standard) 24 VDC								
T6G1	CC-Link	NPN 16 points	●	●	●	●	●	●
T8G1	CC-Link	NPN 16 points	●	●	●	●	●	●
T8G2		NPN 32 points	●	●	●	●	●	●
T8GP1		PNP 16 points	●	●	●	●	●	●
T8GP2		PNP 32 points	●	●	●	●	●	●
T8P1	PROFIBUS-DP	NPN 16 points	●	●	●	●	●	●
T8P2		NPN 32 points	●	●	●	●	●	●
T8PP1		PNP 16 points	●	●	●	●	●	●
T8PP2		PNP 32 points	●	●	●	●	●	●
T8EC1	EtherCAT	NPN 16 points	●	●	●	●	●	●
T8EC2		NPN 32 points	●	●	●	●	●	●
T8ECP1		PNP 16 points	●	●	●	●	●	●
T8ECP2		PNP 32 points	●	●	●	●	●	●
T8EN1	EtherNet/IP	NPN 16 points	●	●	●	●	●	●
T8EN2		NPN 32 points	●	●	●	●	●	●
T8ENP1		PNP 16 points	●	●	●	●	●	●
T8ENP2		PNP 32 points	●	●	●	●	●	●
T8D1	DeviceNet	NPN 16 points	●	●	●	●	●	●
T8D2		NPN 32 points	●	●	●	●	●	●
T8DP1		PNP 16 points	●	●	●	●	●	●
T8DP2		PNP 32 points	●	●	●	●	●	●
T8EB1	CC-Link IEF Basic	NPN 16 points	●	●	●	●	●	●
T8EB2		NPN 32 points	●	●	●	●	●	●
T8EBP1		PNP 16 points	●	●	●	●	●	●
T8EBP2		PNP 32 points	●	●	●	●	●	●
T8EF1	CC-Link IE Field	NPN 16 points	●	●	●	●	●	●
T8EF2		NPN 32 points	●	●	●	●	●	●
T8EFP1		PNP 16 points	●	●	●	●	●	●
T8EFP2		PNP 32 points	●	●	●	●	●	●
T8EP1	PROFINET	NPN 16 points	●	●	●	●	●	●
T8EP2		NPN 32 points	●	●	●	●	●	●
T8EPP1		PNP 16 points	●	●	●	●	●	●
T8EPP2		PNP 32 points	●	●	●	●	●	●
T8KC1	IO-Link	NPN 16 points	●	●	●	●	●	●
T8KC2		NPN 32 points	●	●	●	●	●	●
T8KCP1		PNP 16 points	●	●	●	●	●	●
T8KCP2		PNP 32 points	●	●	●	●	●	●
A2N	Without lead wire (no socket)	with surge suppressor and indicator lamp	●	●	●	●	●	●

Ⓕ Option								
Blank	Manual override of non-locking/locking common		●	●	●	●	●	●
M	Manual override of non-locking		●	●	●	●	●	●
H	With exhaust check valve	(*6)	●	●	●	●	●	●
K	External pilot	(*7)	●	●	●	●	●	●
A	Ozone/coolant proof		●	●	●	●	●	●
S	Surgeless	(*8)	●	●	●	●	●	●
E	Low exoergic/energy circuit	(*8) (*9)	●	●	●	●	●	●
F	Built-in A/B port filter	(*10)	●	●	●	●	●	●
Z1	Air supply spacer	(*11)	●	●	●	●	●	●
Z3	Exhaust spacer	(*11)	●	●	●	●	●	●

Ozone proof specifications

Cutting oil prohibited specifications

Can be selected with "How to order" Item option "A".

⚠ Precautions for model No. selection

***6: 3-position all ports closed and PAB connection are not provided with the exhaust check valve (H). Refer to page 751 for details on the exhaust check valve.**
*7: For details of vacuum using with the external pilot (K), consult CKD.
*8: Selecting a combination of surgeless "S" and the low exoergic/energy-saving circuit "E" is not allowed.
*9: Applicable to surgeless specifications
*10: P port is equipped with a filter as standard.
***11: The mounting position and the quantity of spacers should be specified in the manifold specifications of each catalog. Stacking multiple spacers is not supported. Combination with the masking plate is not supported. Refer to pages 592 to 595 for details.**
*12: A (ozone compatible) and Ⓗ clean room specifications P74 cannot be combined.
*13: Specifications which do not allow copper-based/silicon-based/halogen-based materials apply to the main valve section.
*14: P74 Series is a custom order product.

Manifold components explanation and parts list

- T10 / T10R
- T11 / T11R
- T30 / T30R
- T50 / T50R
- T51 / T51R
- T52 / T52R
- T53 / T53R

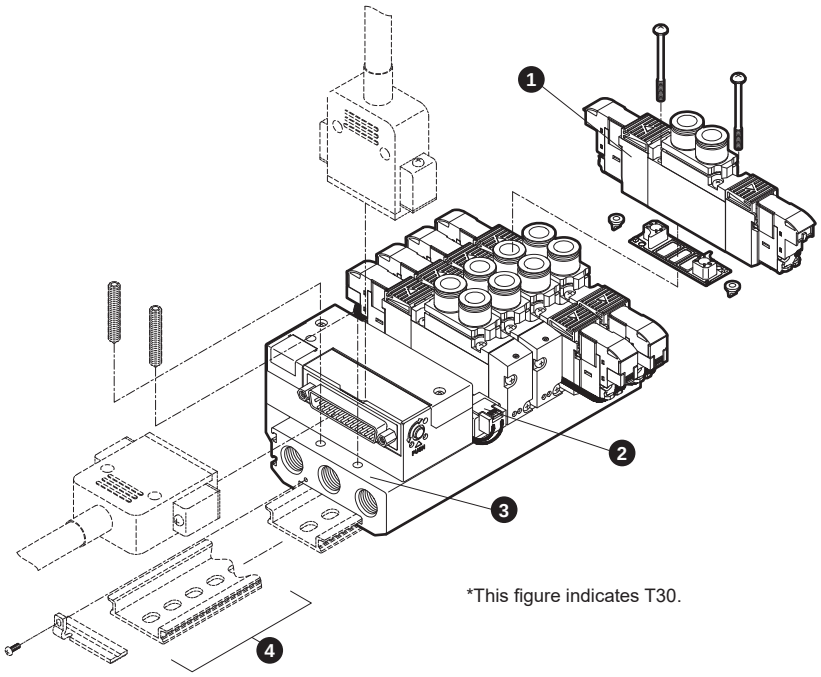

*This figure indicates T30.

- T6G1

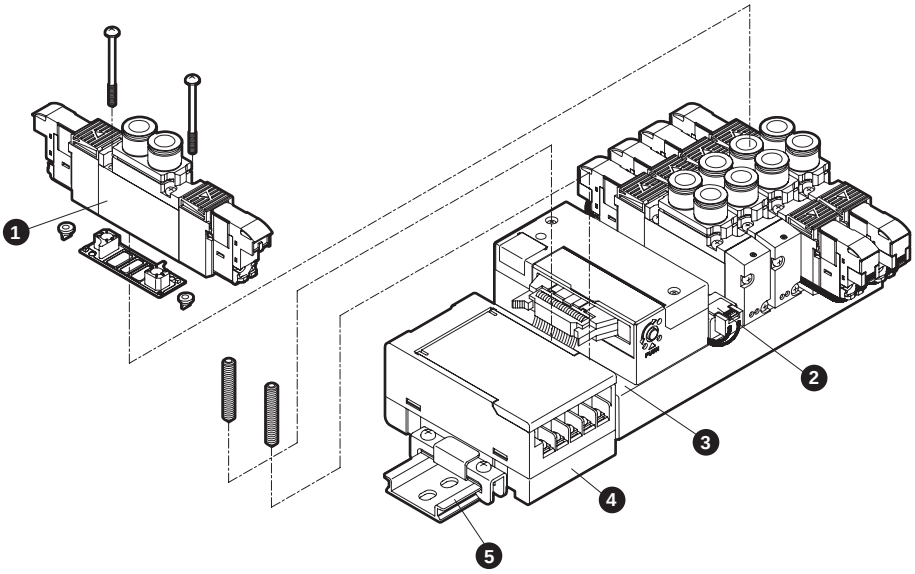

- T8*

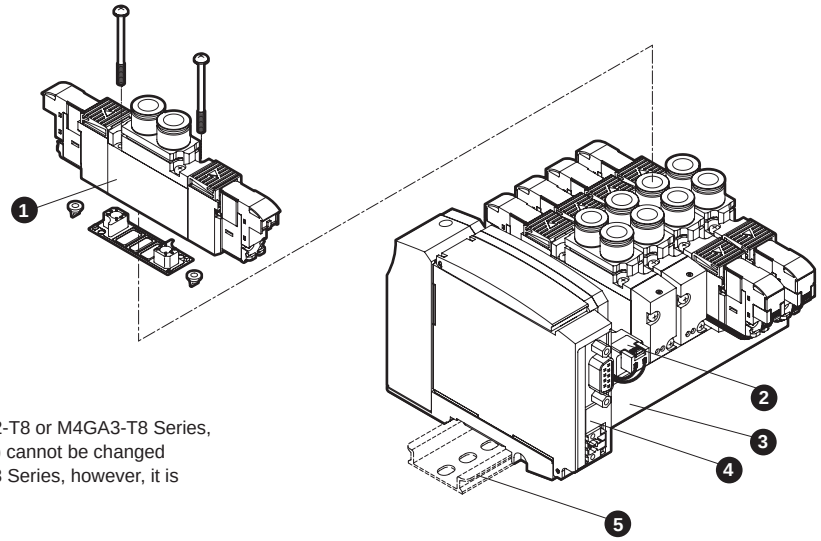

* When purchasing M4GA2-T8 or M4GA3-T8 Series, its mount (direct, DIN rail) cannot be changed afterward. For M4GA1-T8 Series, however, it is changeable.

Main components list

No.	Component name		Model No.	Descriptions	Remarks
1	Discrete valve for mounting base		4GA□□9R- [Port size] -A2N [Option] - [Voltage] - P70 P74 Solenoid position Series flow rate size	Discrete valve Gasket Set screw 2 PR check valve 2	Details on page 542
2	Masking plate	3G1/4G1	4G1R-MP-P70	Masking plate Gasket Set screw 2	* 3G3/4G3 have two PR check valves.
		3G2/4G2	4G2R-MP-P70		
		3G3/4G3	4G3R-MP-P70		
3	Manifold base assembly		M4GA□R-00- [T56] - [Option] - [Station No.] - P70 Series flow rate size	Manifold base Electrical block	
4	Serial transmission slave unit		4GR-OPP3 - [Wiring method] 4GR-OPP7 - [Wiring method]	Serial transmission slave unit	Details on page 560
5	DIN rail kit		4GA□R-BAA [Rail length] - [option D] Series flow rate size		Details on page 599

Parts list

No.	Parts name	Model No.
-	Coil assembly	4GR-A2N - □ - COIL - [Voltage] - P70 Blank: Standard A: Ozone/cutting oil compatible S: Surgeless E: Low exoergic/energy-saving circuit K: External pilot
-	A type connector Socket assembly Details on page 737	Series flow rate size 4G □ R- SOCKET-ASSY-A □ □ - [Row No.] - P70 Blank: Left side, R: Right side A: aSOL side, B: bSOL side n: Specify the position of the valve to be connected

No.	Parts name	Model No.		
-	Cartridge push-in fittings and related parts	4G1	ø1.8 barbed	4G1R-JOINT-CF-P70
			ø1.8 straight	4G1R-JOINT-C18-P70
			ø4 straight	4G1R-JOINT-C4-P70
			ø6 straight	4G1R-JOINT-C6-P70
			ø1/8" straight	4G1R-JOINT-C3N-P70
			ø5/32" straight	4G1R-JOINT-C4N-P70
			Plug cartridge	4G1R-JOINT-CPG-P70
		4G2	ø4 straight	4G2R-JOINT-C4-P70
			ø6 straight	4G2R-JOINT-C6-P70
			ø8 straight	4G2R-JOINT-C8-P70
			ø1/4" straight	4G2R-JOINT-C6N-P70
			ø5/16" straight	4G2R-JOINT-C8N-P70
			Plug cartridge	4G2R-JOINT-CPG-P70
		4G3	ø6 straight	4G3R-JOINT-C6-P70
			ø8 straight	4G3R-JOINT-C8-P70
			ø10 straight	4G3R-JOINT-C10-P70
			ø5/16" straight	4G3R-JOINT-C8N-P70
			ø3/8" straight	4G3R-JOINT-C10N-P70
			Plug cartridge	4G3R-JOINT-CPG-P70

SCPD3
SCM
SSD2
MDC2
SMG
LCM
LCR
LCG
LCX
STM
STG
STR2
MRL2
GRC
Cylinder switch
MN3E MN4E
4GA/B
M4GA/B
MN4GA/B
F.R (module unit)
Clean F.R
Precision R
Press gauge Diff. press gauge
Electro-pneumatic R
Speed controller
Auxiliary valve
Fitting/ tube
Clean air unit
Pressure sensor
Flow rate sensor
Valve for air blow
Ending

Dimensions CAD

M4GA1-P7*

* This drawing shows the T30. Refer to pages 558 to 559 for detailed dimensions of the electric block.
* For the 2-position single 3-port valve, the port A or port B is a plug. The dimension of the dual 3-port valve integrated is the same as that of the double.
* Refer to page 755 for details on the mounting holes.

● Reduced wiring left side (T10/T11/T30/T50/T51/T52/T53)

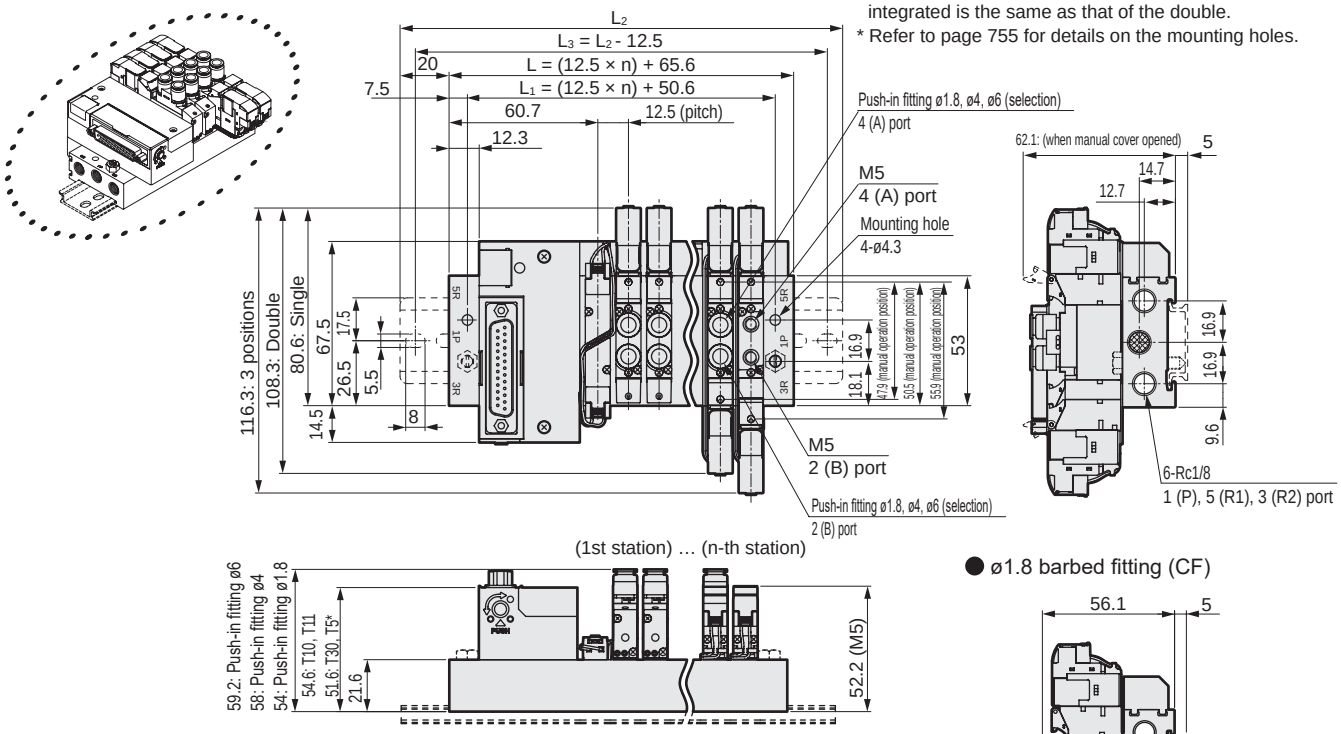

● ø1.8 barbed fitting (CF)

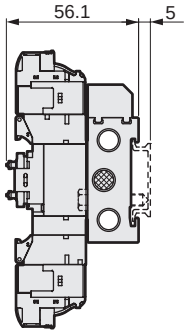

● Reduced wiring right side (T10R/T11R/T30R/T50R/T51R/T52R/T53R)

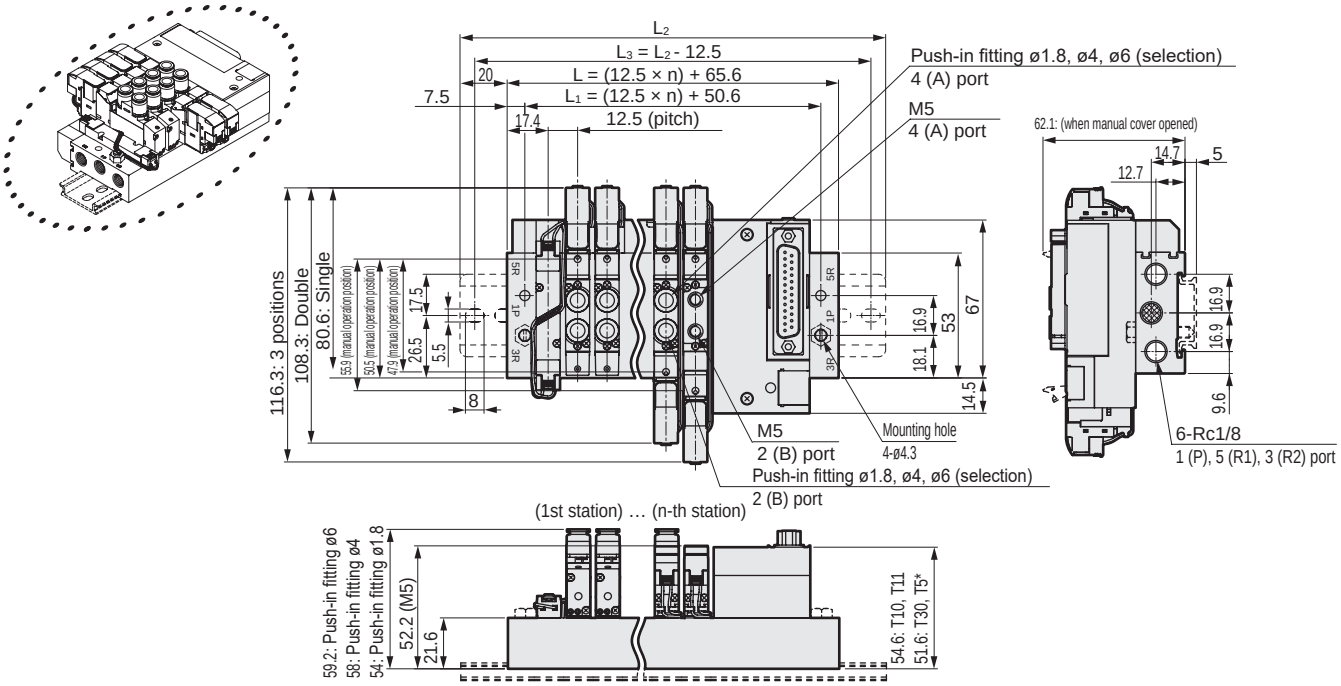

Station No.	2	3	4	5	6	7	8	9	10	11	12	13	14	15	16	17	18	19	20
L	90.6	103.1	115.6	128.1	140.6	153.1	165.6	178.1	190.6	203.1	215.6	228.1	240.6	253.1	265.6	278.1	290.6	303.1	315.6
L_1	75.6	88.1	100.6	113.1	125.6	138.1	150.6	163.1	175.6	188.1	200.6	213.1	225.6	238.1	250.6	263.1	275.6	288.1	300.6
L_2	137.5	150.0	162.5	175.0	187.5	200.0	212.5	225.0	237.5	250.0	262.5	275.0	287.5	300.0	312.5				
L_3	125.0	137.5	150.0	162.5	175.0	187.5	200.0	212.5	225.0	237.5	250.0	262.5	275.0	287.5	300.0				

Dimensions

M4GA1-P7*

* This drawing shows the T30. Refer to pages 558 to 559 for detailed dimensions of the electric block.
* For 2-position single 3-port valve, port A or port B is a plug.
* Refer to page 755 for details on the mounting holes.

● Reduced wiring left side (T10/T11/T30/T50/T51/T52/T53)
External pilot (K)

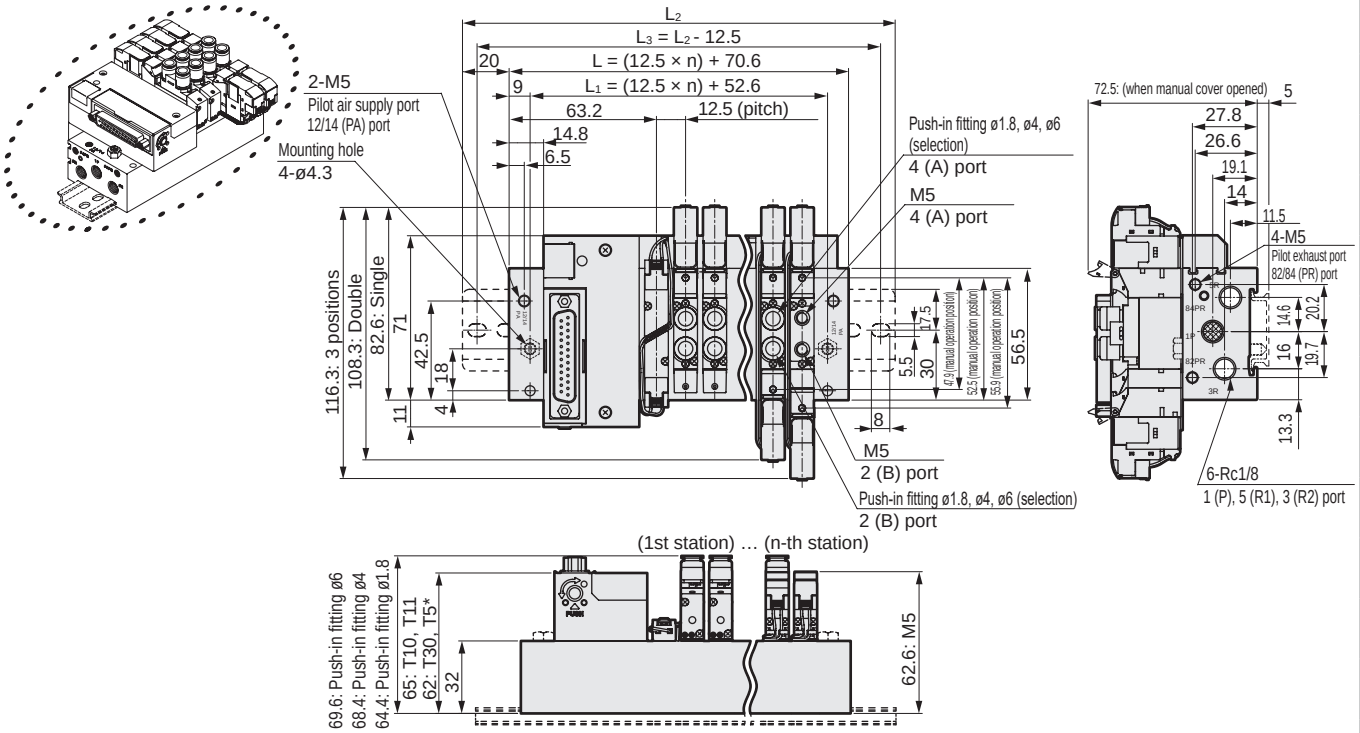

● Reduced wiring right side (T10R/T11R/T30R/T50R/T51R/T52R/T53R)
External pilot (K)

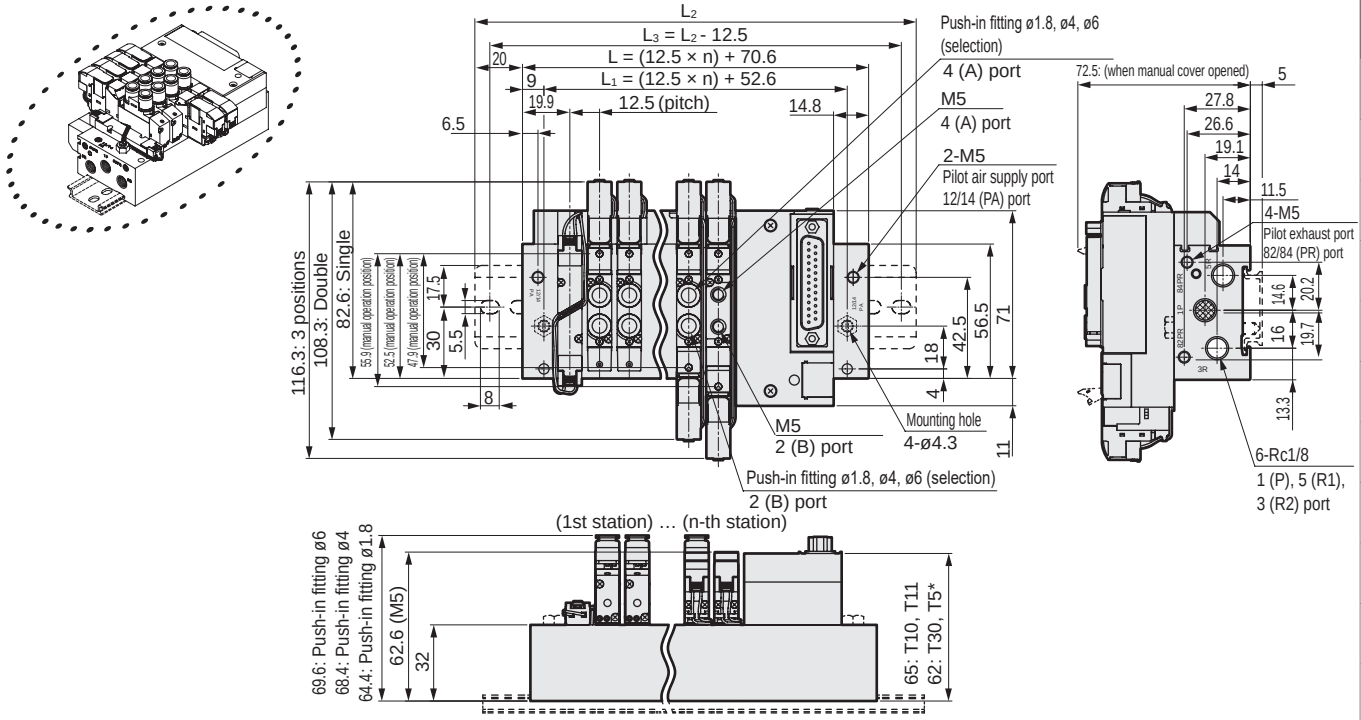

Station No.	2	3	4	5	6	7	8	9	10	11	12
L	95.6	108.1	120.6	133.1	145.6	158.1	170.6	183.1	195.6	208.1	220.6
L_1	77.6	90.1	102.6	115.1	127.6	140.1	152.6	165.1	177.6	190.1	202.6
L_2	137.5	150.0	162.5	175.0	187.5	200.0	212.5	225.0	237.5	250.0	262.5
L_3	125.0	137.5	150.0	162.5	175.0	187.5	200.0	212.5	225.0	237.5	250.0

M4GA1-T6D Series

Reduced wiring manifold; direct piping; serial transmission

Dimensions CAD

M4GA1-P7*

* With the 2-position single 3-port valve, either the A port or B port will be plugged. The dimension of the dual 3-port valve integrated is the same as that of the double type.

● Serial transmission (T6G1)
DIN rail mounting (D)

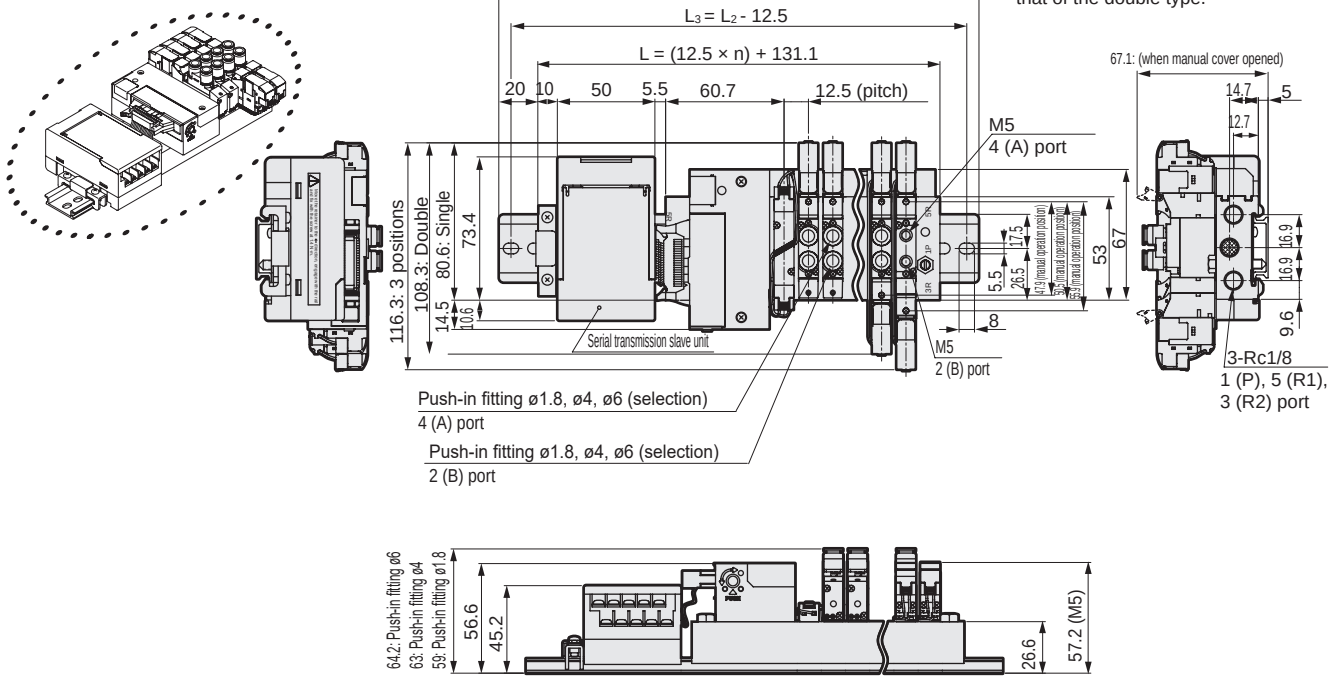

Station No.	2	3	4	5	6	7	8	9	10	11	12	13	14	15	16
L	156.1	168.6	181.1	193.6	206.1	218.6	231.1	243.6	256.1	268.6	281.1	293.6	306.1	318.6	331.1
L_2	200.0	212.5	225.0	237.5	250.0	262.5	275.0	287.5	300.0	312.5	325.0	337.5	350.0	362.5	375.0
L_3	187.5	200.0	212.5	225.0	237.5	250.0	262.5	275.0	287.5	300.0	312.5	325.0	337.5	350.0	362.5

M4GA1-P7*

● Serial transmission (T6G1)
DIN rail mounting (D); external pilot (K)

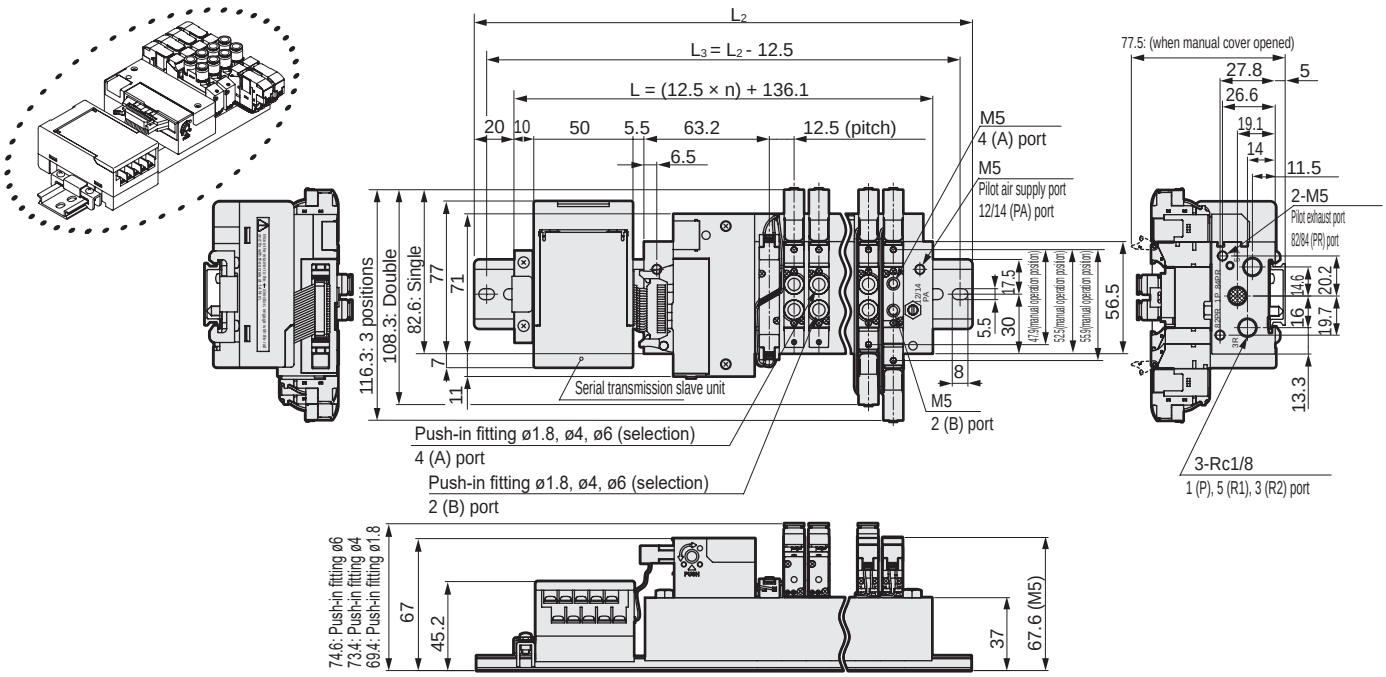

Station No.	2	3	4	5	6	7	8	9	10	11	12
L	161.1	173.6	186.1	198.6	211.1	223.6	236.1	248.6	261.1	273.6	286.1
L_2	212.5	225.0	237.5	250.0	262.5	275.0	287.5	300.0	312.5	325.0	337.5
L_3	200.0	212.5	225.0	237.5	250.0	262.5	275.0	287.5	300.0	312.5	325.0

Dimensions

M4GA1-P7*

* Refer to page 755 for details on the mounting holes.

● Serial transmission (T8□)
DIN rail mounting (D)

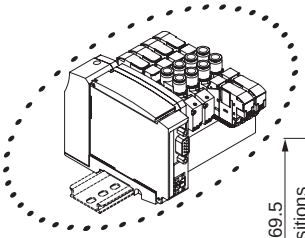

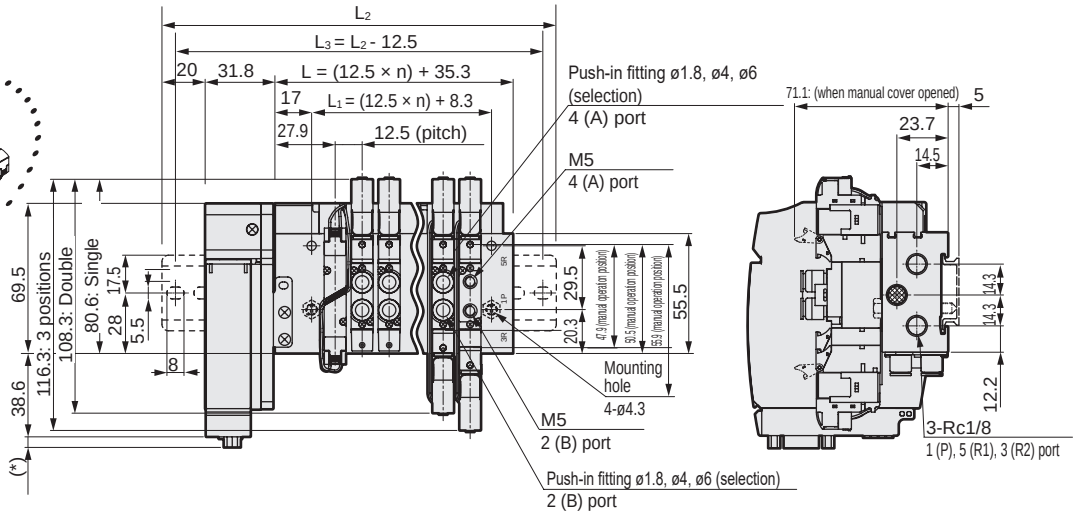

Serial transmission	(*) Dimensions
T8G□	1.0
T8P□	4.9
T8E□	1.5
T8D□	1.0
T8K□	1.0

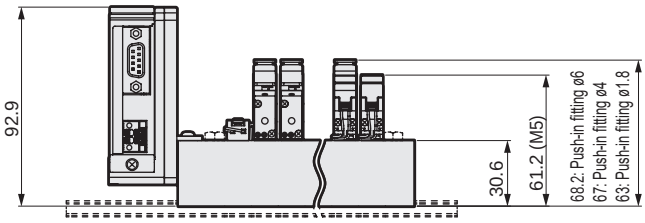

Station No.	2	3	4	5	6	7	8	9	10	11	12	13	14	15	16	17	18	19	20
L	60.3	72.8	85.3	97.8	110.3	122.8	135.3	147.8	160.3	172.8	185.3	197.8	210.3	222.8	235.3	247.8	260.3	272.8	285.3
L_1	33.3	45.8	58.3	70.8	83.3	95.8	108.3	120.8	133.3	145.8	158.3	170.8	183.3	195.8	208.3	220.8	233.3	245.8	258.3
L_2	137.5	150.0	162.5	175.0	187.5	200.0	212.5	225.0	237.5	250.0	262.5	275.0	287.5	300.0	312.5				
L_3	125.0	137.5	150.0	162.5	175.0	187.5	200.0	212.5	225.0	237.5	250.0	262.5	275.0	287.5	300.0				

M4GA1-P7*

● Serial transmission (T8□)
DIN rail mounting (D); external pilot (K)

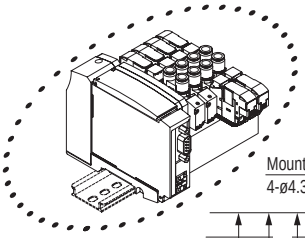

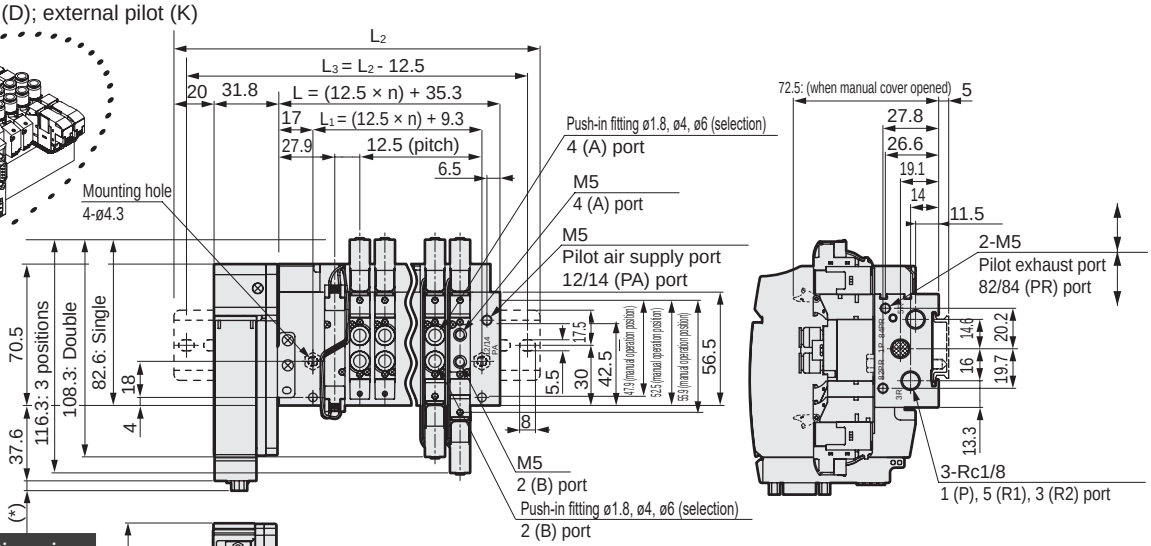

Serial transmission	(*) Dimensions
T8G□	1.0
T8P□	4.9
T8E□	1.5
T8D□	1.0
T8K□	1.0

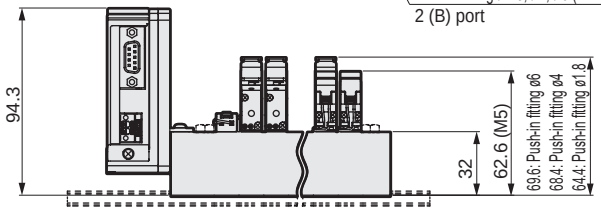

Station No.	2	3	4	5	6	7	8	9	10	11	12
L	60.3	72.8	85.3	97.8	110.3	122.8	135.3	147.8	160.3	172.8	185.3
L_1	34.3	46.8	59.3	71.8	84.3	96.8	109.3	121.8	134.3	146.8	159.3
L_2	137.5	150.0	162.5	175.0	187.5	200.0	212.5	225.0	237.5	250.0	262.5
L_3	125.0	137.5	150.0	162.5	175.0	187.5	200.0	212.5	225.0	237.5	250.0

SCPD3
SCM
SSD2
MDC2
SMG
LCM
LCR
LCG
LCX
STM
STG
STR2
MRL2
GRC
Cylinder switch
MN3E MN4E
4GA/B
M4GA/B
MN4GA/B
F.R (module unit)
Clean F.R
Precision R
Press gauge Diff. press gauge
Electro-pneumatic R
Speed controller
Auxiliary valve
Fitting/ tube
Clean air unit
Pressure sensor
Flow rate sensor
Valve for air blow
Ending

Dimensions CAD

M4GA2-P7*

* This drawing shows the T50. Refer to pages 558 to 559 for detailed dimensions of the electric block.
* For the 2-position single 3-port valve, the port A or port B is a plug. The dimension of the dual 3-port valve integrated is the same as that of the double type.
* Refer to page 754 for details on the mounting holes.

● Reduced wiring left side (T10/T11/T30/T50/T51/T52/T53)

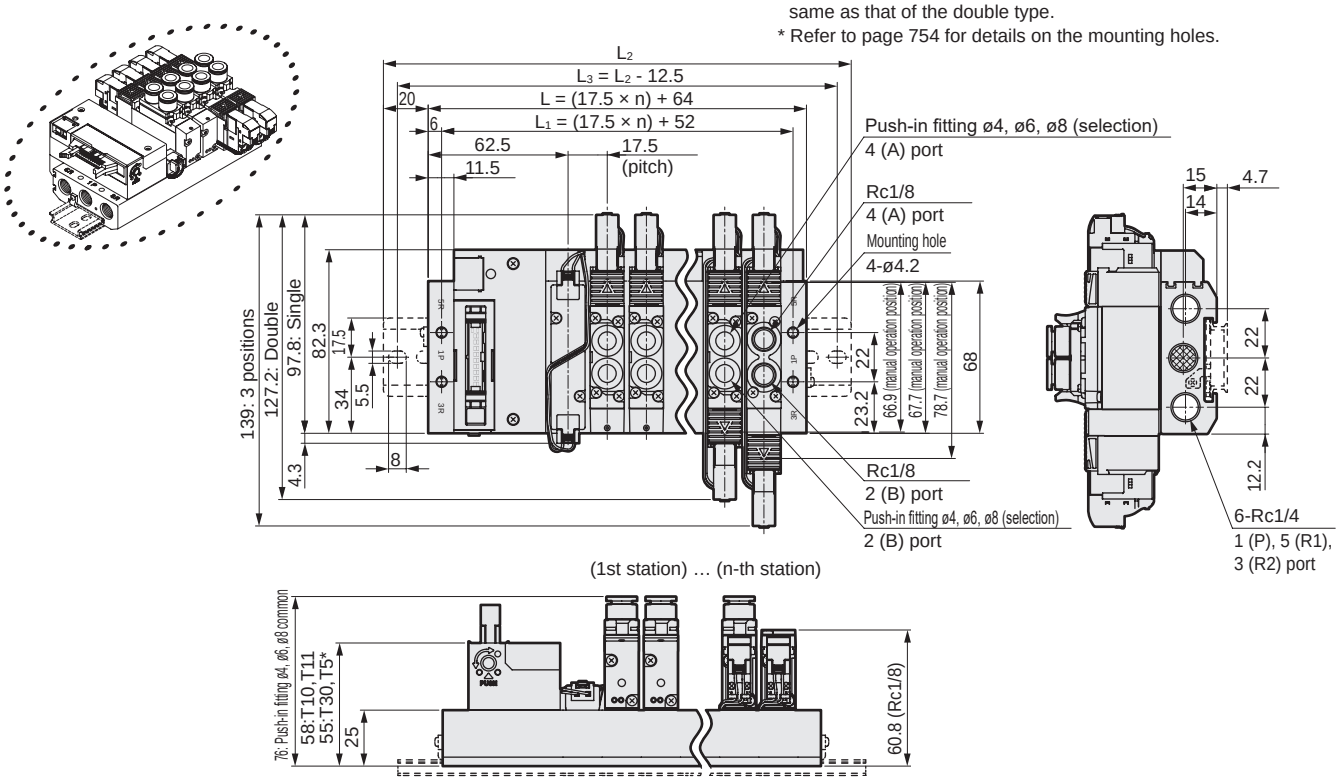

● Reduced wiring right side (T10R/T11R/T30R/T50R/T51R/T52R/T53R)

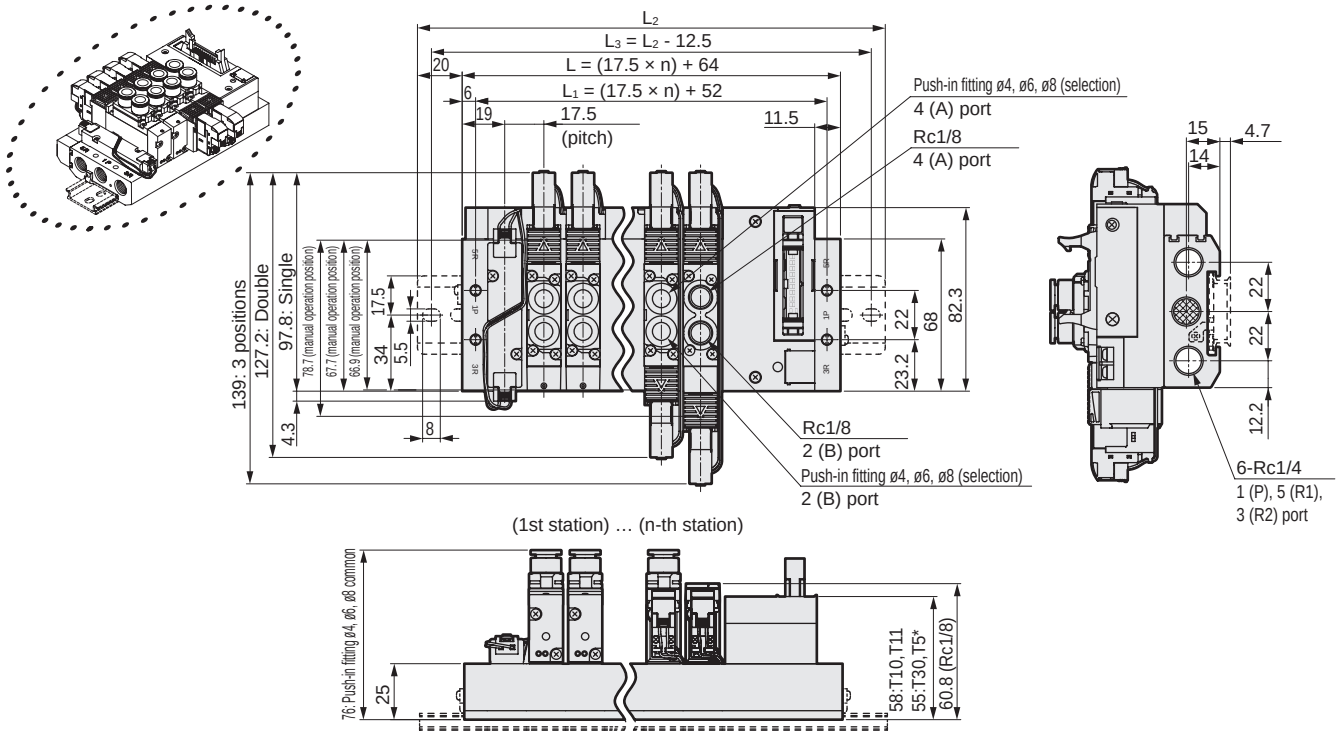

Station No.	2	3	4	5	6	7	8	9	10	11	12	13	14	15	16	17	18	19	20
L	99.0	116.5	134.0	151.5	169.0	186.5	204.0	221.5	239.0	256.5	274.0	291.5	309.0	326.5	344.0	361.5	379.0	396.5	414.0
L_1	87.0	104.5	122.0	139.5	157.0	174.5	192.0	209.5	227.0	244.5	262.0	279.5	297.0	314.5	332.0	349.5	367.0	384.5	402.0
L_2	150.0	162.5	175.0	200.0	212.5	237.5	250.0	262.5	287.5	300.0	325.0	337.5	350.0	375.0	387.5				
L_3	137.5	150.0	162.5	187.5	200.0	225.0	237.5	250.0	275.0	287.5	312.5	325.0	337.5	362.5	375.0				

Dimensions

M4GA2-P7*

* This drawing shows the T30. Refer to pages 558 to 559 for detailed dimensions of the electric block.
* For 2-position single 3-port valve, port A or port B is a plug.
* Refer to page 754 for details on the mounting holes.

● Reduced wiring left side (T10/T11/T30/T50/T51/T52/T53)
External pilot (K)

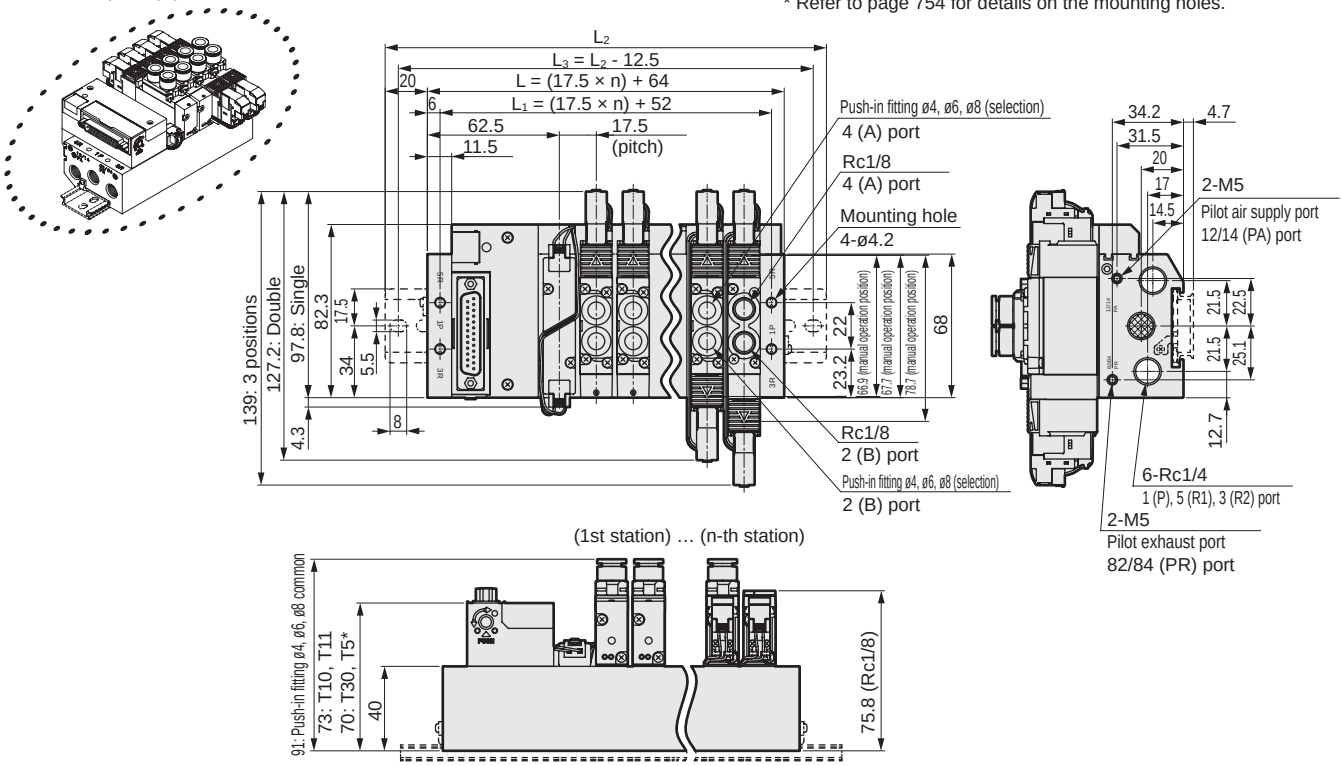

● Reduced wiring right side (T10R/T11R/T30R/T50R/T51R/T52R/T53R)
External pilot (K)

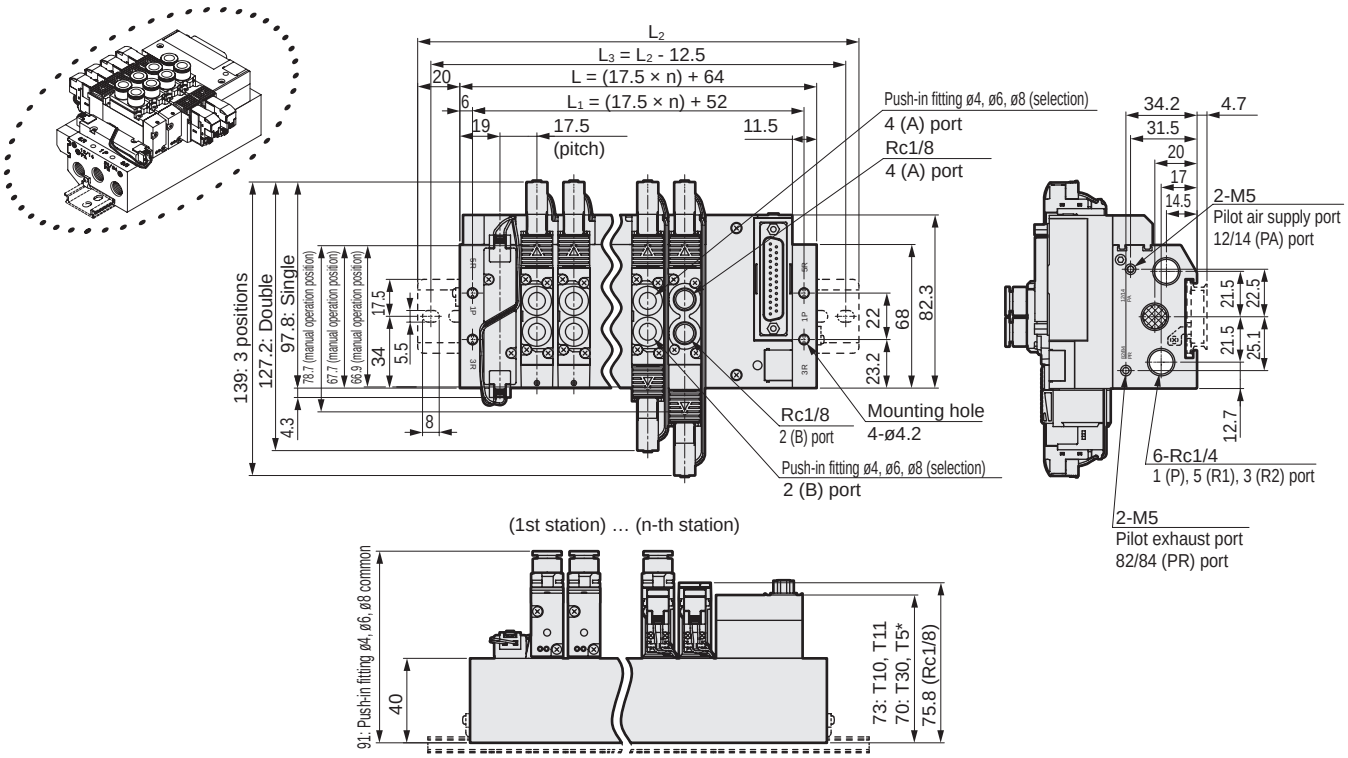

Station No.	2	3	4	5	6	7	8	9	10	11	12	13	14	15	16	17	18	19	20
L	99.0	116.5	134.0	151.5	169.0	186.5	204.0	221.5	239.0	256.5	274.0	291.5	309.0	326.5	344.0	361.5	379.0	396.5	414.0
L_1	87.0	104.5	122.0	139.5	157.0	174.5	192.0	209.5	227.0	244.5	262.0	279.5	297.0	314.5	332.0	349.5	367.0	384.5	402.0
L_2	150.0	162.5	175.0	200.0	212.5	237.5	250.0	262.5	287.5	300.0	325.0	337.5	350.0	375.0	387.5				
L_3	137.5	150.0	162.5	187.5	200.0	225.0	237.5	250.0	275.0	287.5	312.5	325.0	337.5	362.5	375.0				

Dimensions CAD

M4GA2-P7*

* For the 2-position single 3-port valve, the port A or port B is a plug. The dimension of the dual 3-port valve integrated is the same as that of the double type.

● Serial transmission (T6G1)
DIN rail mounting (D)

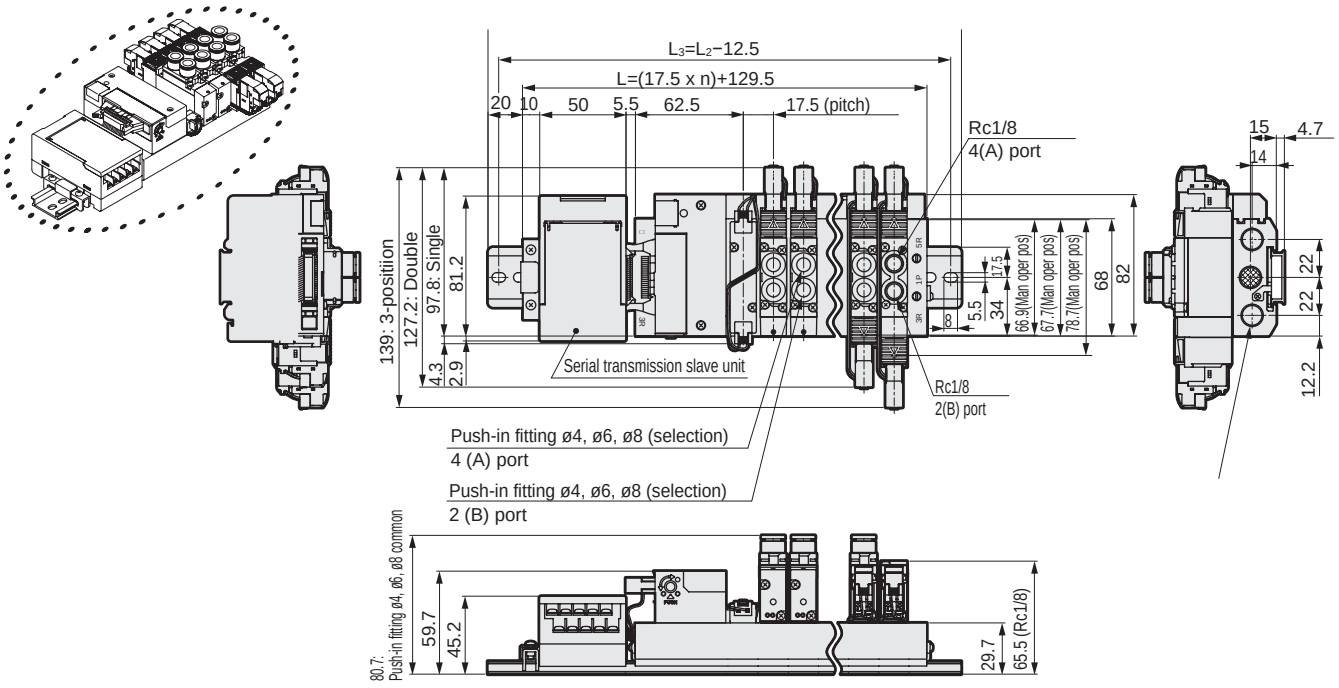

● Serial transmission (T6G1)
DIN rail mounting (D); external pilot (K)

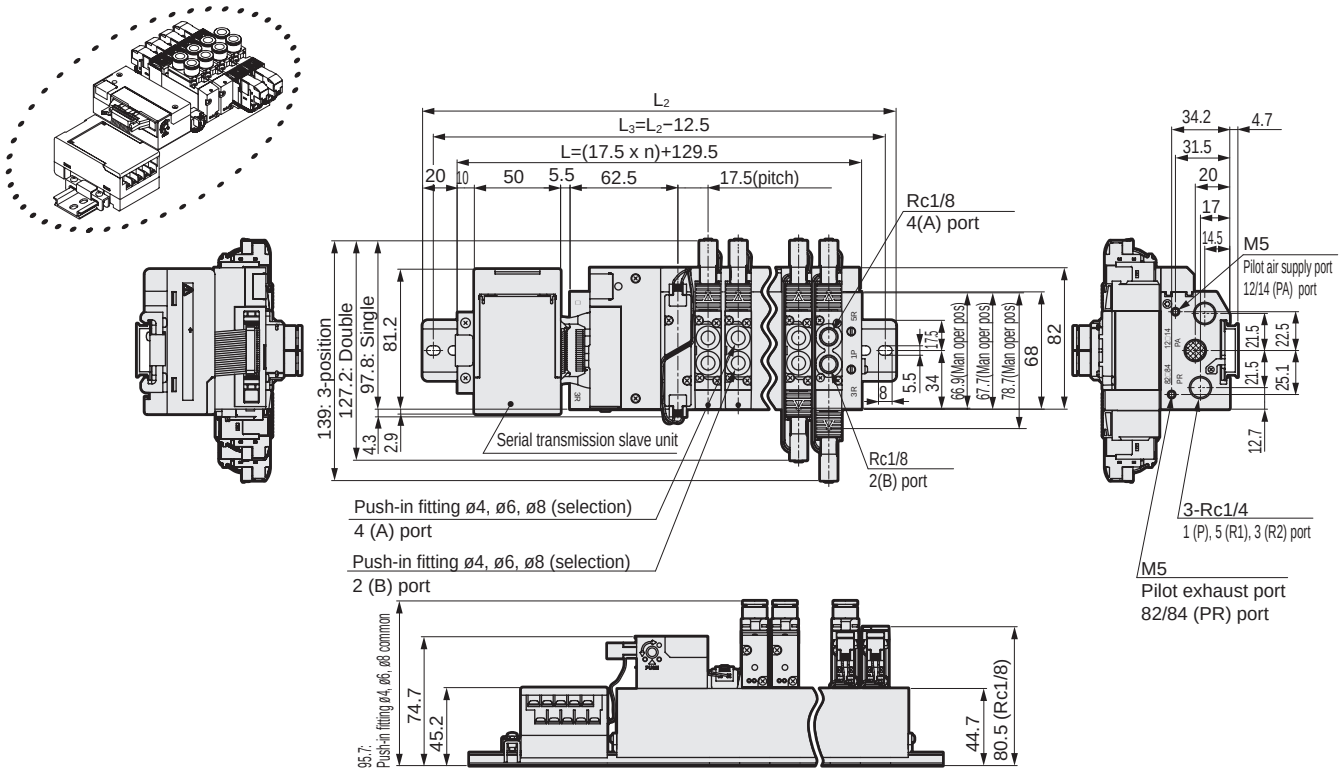

Station No.	2	3	4	5	6	7	8	9	10	11	12	13	14	15	16
L	164.5	182.0	199.5	217.0	234.5	252.0	269.5	287.0	304.5	322.0	339.5	357.0	374.5	392.0	409.5
L_2	212.5	225.0	250.0	262.5	275.0	300.0	312.5	337.5	350.0	362.5	387.5	400.0	425.0	437.5	450.0
L_3	200.0	212.5	237.5	250.0	262.5	287.5	300.0	325.0	337.5	350.0	375.0	387.5	412.5	425.0	437.5

Dimensions

M4GA2-P7*

* Refer to page 754 for details on the mounting holes.

● Serial transmission (T8□)
DIN rail mounting (D)

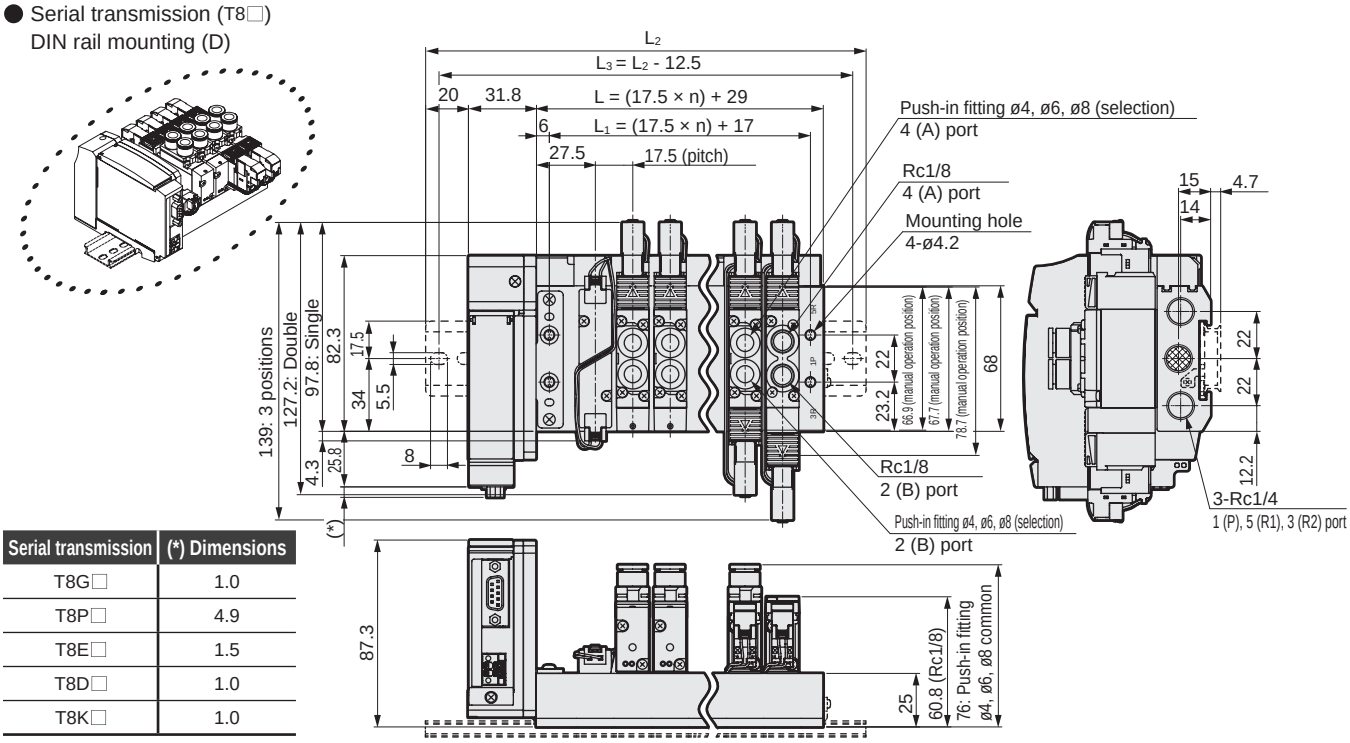

Serial transmission	(*) Dimensions
T8G□	1.0
T8P□	4.9
T8E□	1.5
T8D□	1.0
T8K□	1.0

Station No.	2	3	4	5	6	7	8	9	10	11	12	13	14	15	16	17	18	19	20
L	64.0	81.5	99.0	116.5	134.0	151.5	169.0	186.5	204.0	221.5	239.0	256.5	274.0	291.5	309.0	326.5	344.0	361.5	379.0
L_1	52.0	69.5	87.0	104.5	122.0	139.5	157.0	174.5	192.0	209.5	227.0	244.5	262.0	279.5	297.0	314.5	332.0	349.5	367.0
L_2	137.5	162.5	175.0	200.0	212.5	225.0	250.0	262.5	287.5	300.0	312.5	337.5	350.0	375.0	387.5				
L_3	125.0	150.0	162.5	187.5	200.0	212.5	237.5	250.0	275.0	287.5	300.0	325.0	337.5	362.5	375.0				

M4GA2-P7*

● Serial transmission (T8□)
DIN rail mounting (D); external pilot (K)

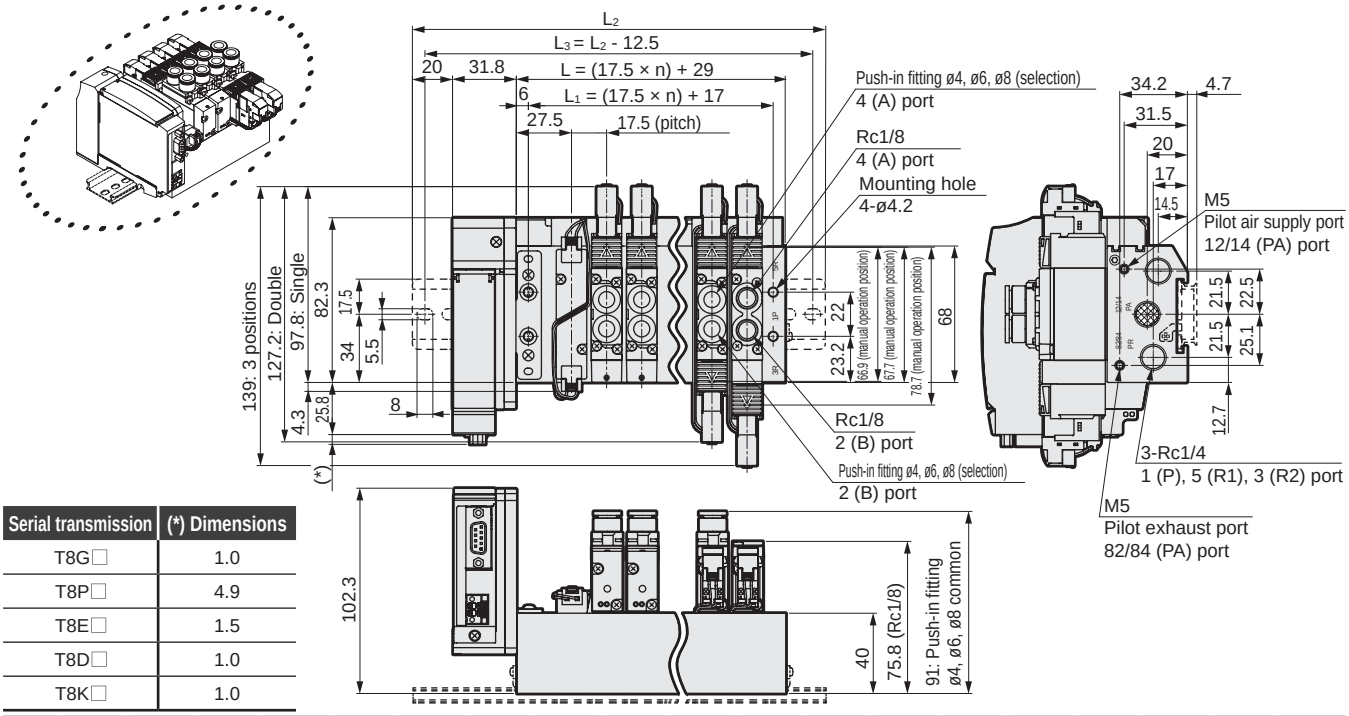

Serial transmission	(*) Dimensions
T8G□	1.0
T8P□	4.9
T8E□	1.5
T8D□	1.0
T8K□	1.0

Station No.	2	3	4	5	6	7	8	9	10	11	12	13	14	15	16	17	18	19	20
L	64.0	81.5	99.0	116.5	134.0	151.5	169.0	186.5	204.0	221.5	239.0	256.5	274.0	291.5	309.0	326.5	344.0	361.5	379.0
L_1	52.0	69.5	87.0	104.5	122.0	139.5	157.0	174.5	192.0	209.5	227.0	244.5	262.0	279.5	297.0	314.5	332.0	349.5	367.0
L_2	137.5	162.5	175.0	200.0	212.5	225.0	250.0	262.5	287.5	300.0	312.5	337.5	350.0	375.0	387.5				
L_3	125.0	150.0	162.5	187.5	200.0	212.5	237.5	250.0	275.0	287.5	300.0	325.0	337.5	362.5	375.0				

SCPD3
SCM
SSD2
MDC2
SMG
LCM
LCR
LCG
LCX
STM
STG
STR2
MRL2
GRC
Cylinder switch
MN3E MN4E
4GA/B
M4GA/B
MN4GA/B
F.R (module unit)
Clean F.R
Precision R
Press gauge Diff. press gauge
Electro-pneumatic R
Speed controller
Auxiliary valve
Fitting/ tube
Clean air unit
Pressure sensor
Flow rate sensor
Valve for air blow
Ending

Dimensions CAD

M4GA3-P7*

* This drawing shows the T50. Refer to pages 558 to 559 for detailed dimensions of the electric block.
* For 2-position single 3-port valve, port A or port B is a plug.
* Refer to page 754 for details on the mounting holes.

● Reduced wiring left side (T10/T11/T30/T50/T51/T52/T53)

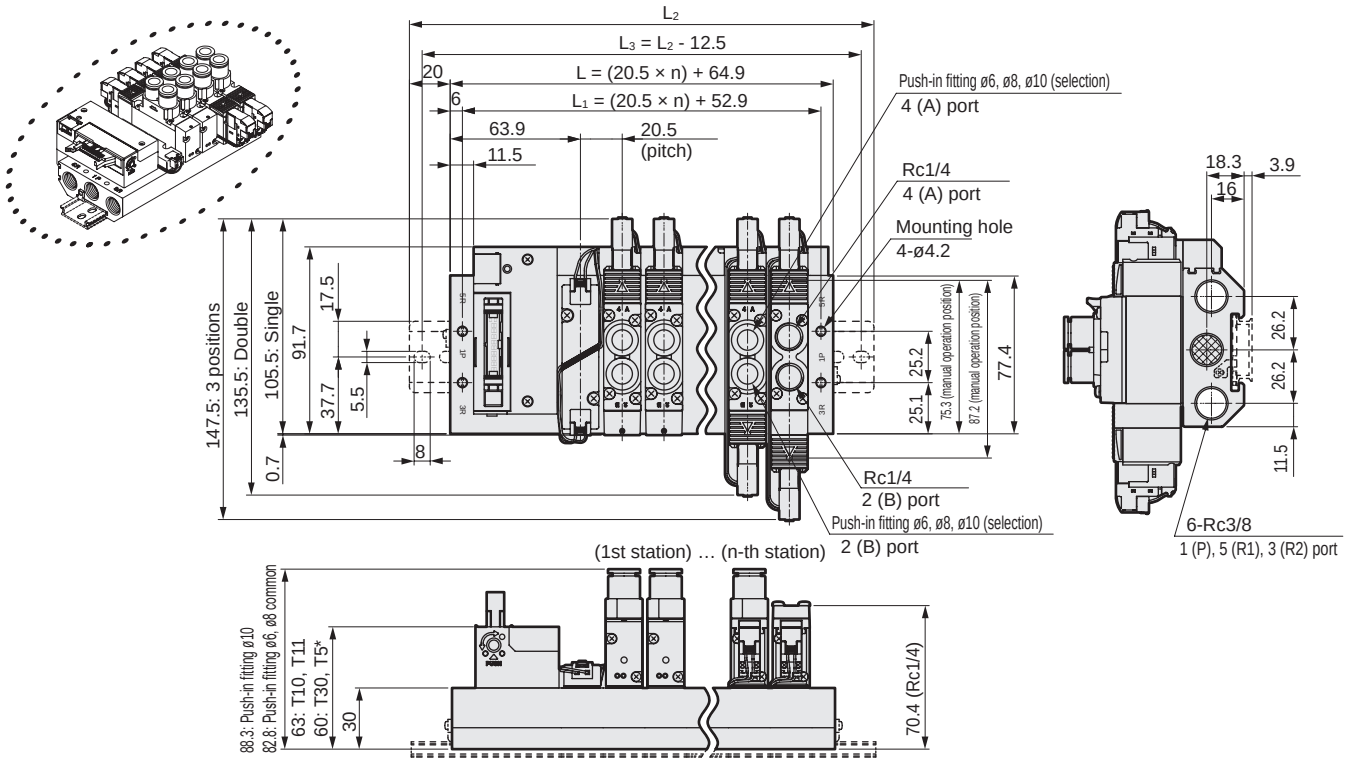

● Reduced wiring right side (T10R/T11R/T30R/T50R/T51R/T52R/T53R)

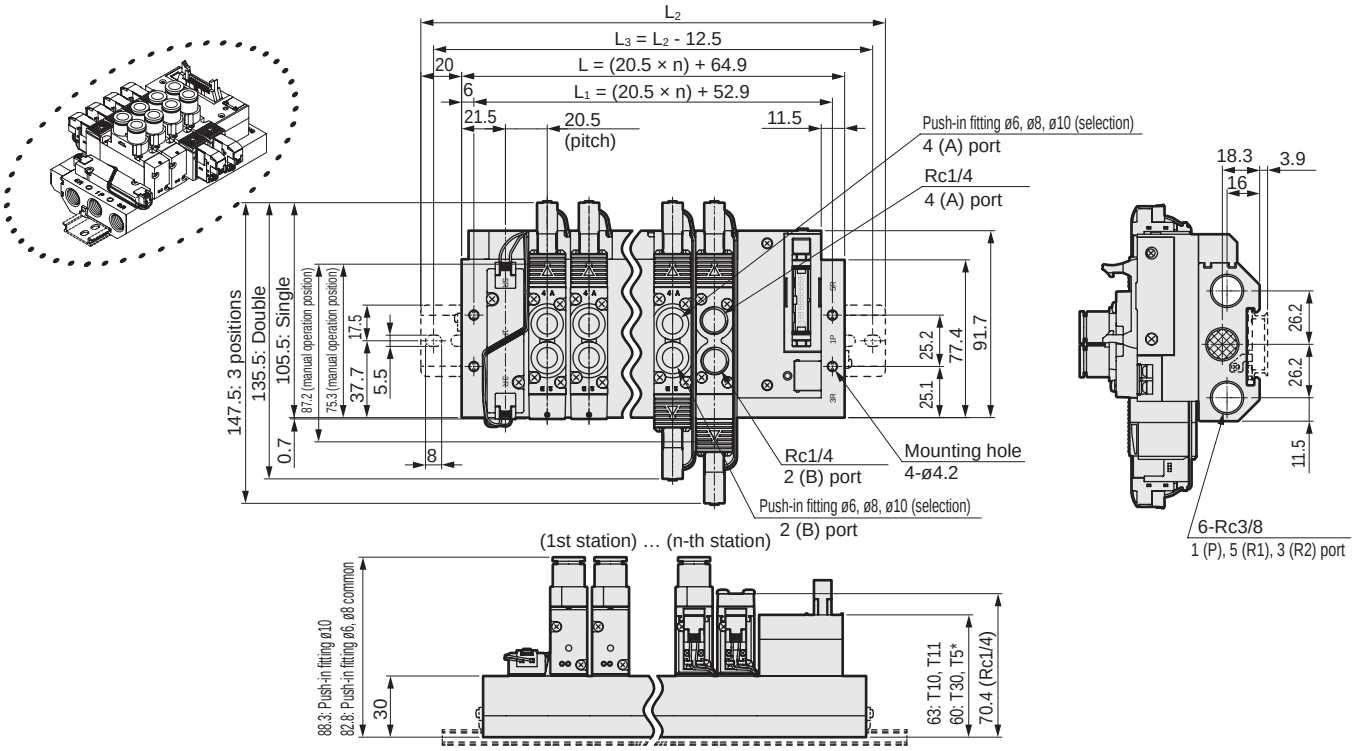

Station No.	2	3	4	5	6	7	8	9	10	11	12	13	14	15	16
L	105.9	126.4	146.9	167.4	187.9	208.4	228.9	249.4	269.9	290.4	310.9	331.4	351.9	372.4	392.9
L_1	93.9	114.4	134.9	155.4	175.9	196.4	216.9	237.4	257.9	278.4	298.9	319.4	339.9	360.4	380.9
L_2	150.0	175.0	187.5	212.5	237.5	250.0	275.0	300.0	312.5	337.5	362.5	375.0	400.0	412.5	437.5
L_3	137.5	162.5	175.0	200.0	225.0	237.5	262.5	287.5	300.0	325.0	350.0	362.5	387.5	400.0	425.0

Dimensions

M4GA3-P7*

● Reduced wiring left side (T10/T11/T30/T50/T51/T52/T53)
External pilot (K)

* This drawing shows the T30. Refer to pages 558 to 559 for detailed dimensions of the electric block.
* For 2-position single 3-port valve, port A or port B is a plug.
* Refer to page 754 for details on the mounting holes.

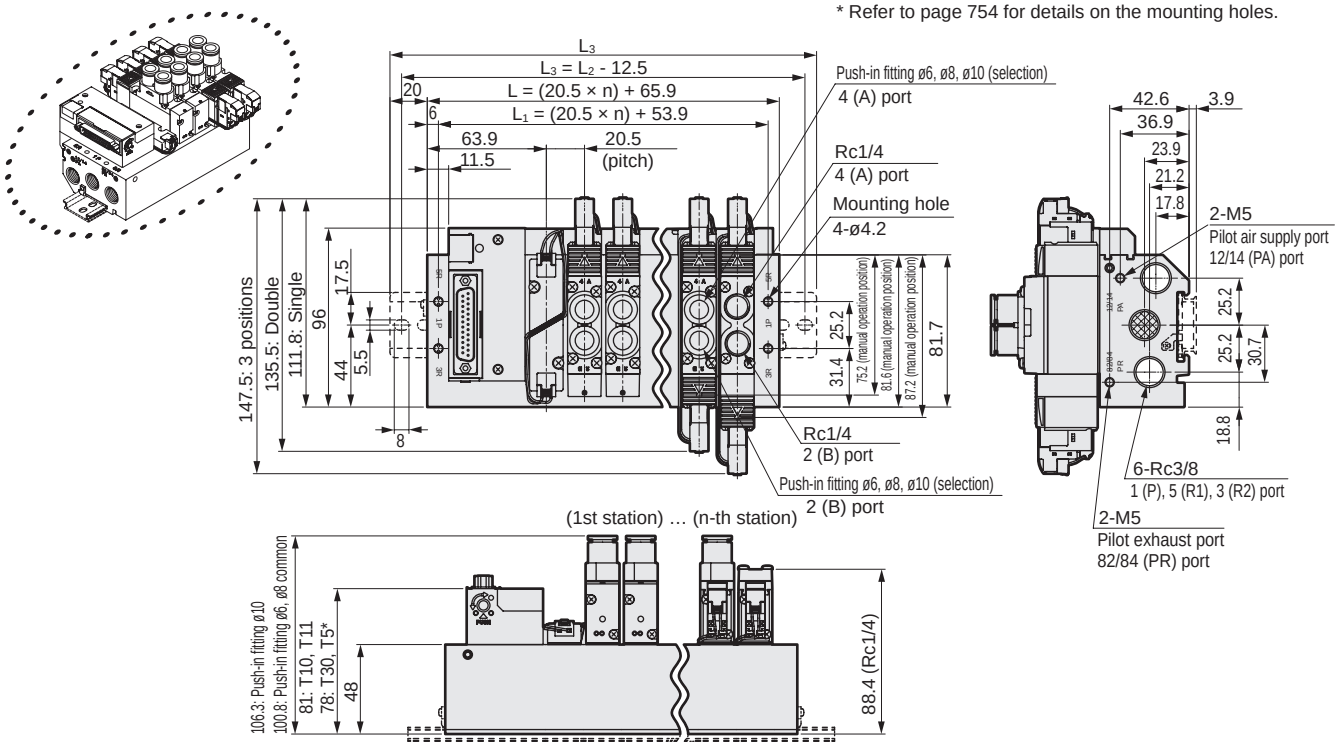

● Reduced wiring right side (T10R/T11R/T30R/T50R/T51R/T52R/T53R)
External pilot (K)

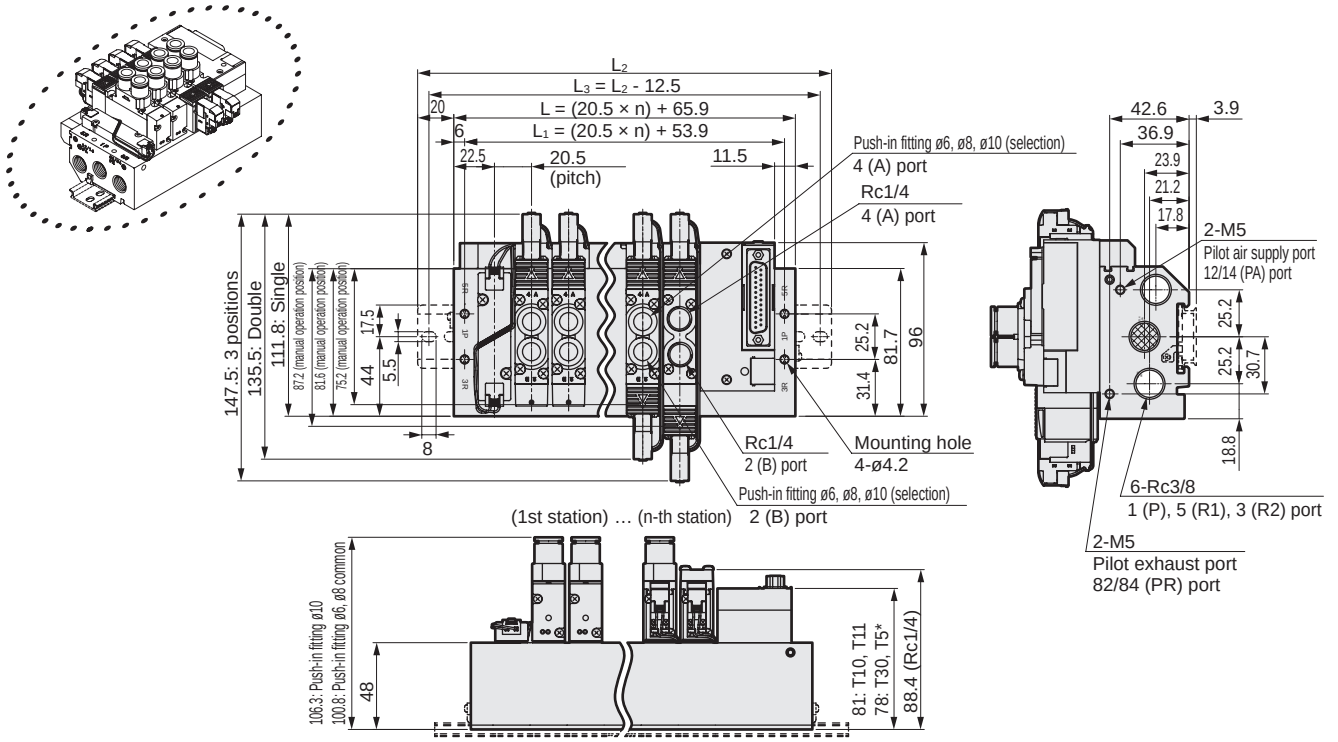

Station No.	2	3	4	5	6	7	8	9	10	11	12	13	14	15	16
L	106.9	127.4	147.9	168.4	188.9	209.4	229.9	250.4	270.9	291.4	311.9	332.4	352.9	373.4	393.9
L_1	94.9	115.4	135.9	156.4	176.9	197.4	217.9	238.4	258.9	279.4	299.9	320.4	340.9	361.4	381.9
L_2	150.0	175.0	200.0	212.5	237.5	250.0	275.0	300.0	312.5	337.5	362.5	375.0	400.0	412.5	437.5
L_3	137.5	162.5	187.5	200.0	225.0	237.5	262.5	287.5	300.0	325.0	350.0	362.5	387.5	400.0	425.0

M4GA3-T6G1 Series

Reduced wiring manifold; direct piping; serial transmission

Dimensions CAD

M4GA3-P7*

● Serial transmission (T6G1)
DIN rail mounting (D)

* With the 2-position single 3-port valve, either the A port or B port will be plugged.

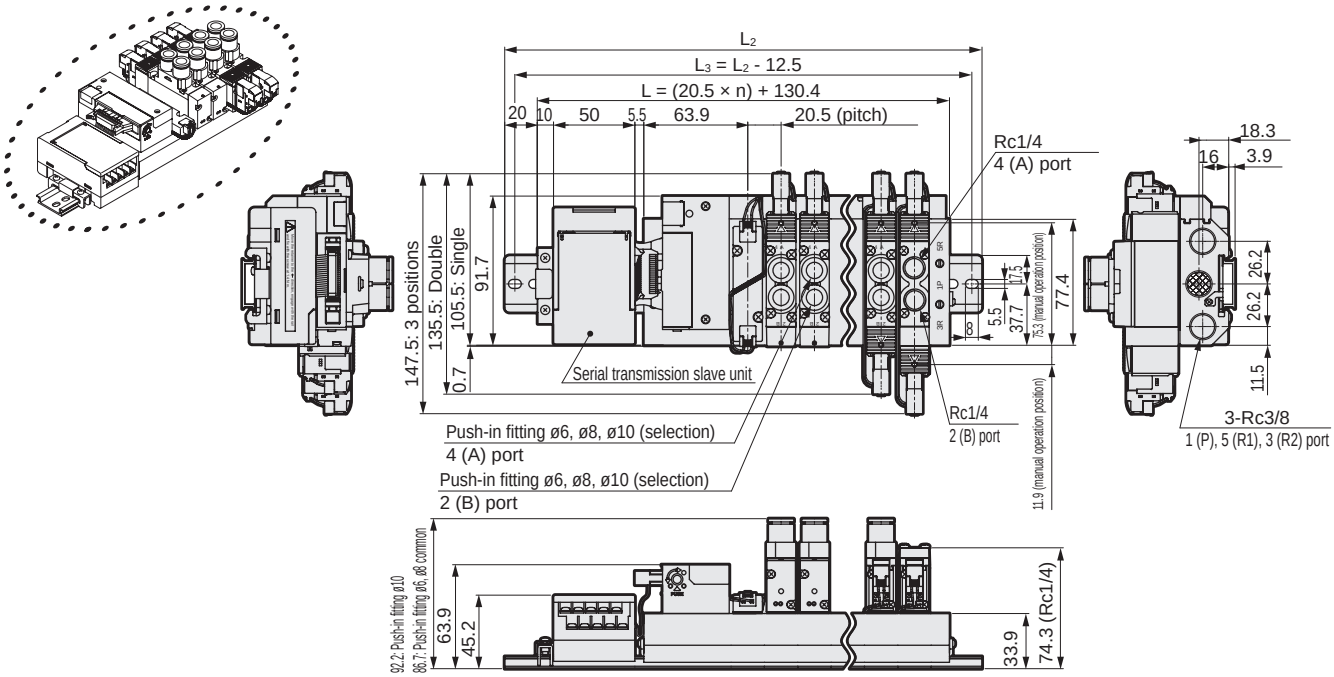

Station No.	2	3	4	5	6	7	8	9	10	11	12	13	14	15	16
L	171.4	191.9	212.4	232.9	253.4	273.9	294.4	314.9	335.4	355.9	376.4	396.9	417.4	437.9	458.4
L_2	212.5	237.5	262.5	275.0	300.0	325.0	337.5	362.5	387.5	400.0	425.0	437.5	462.5	487.5	500.0
L_3	200.0	225.0	250.0	262.5	287.5	312.5	325.0	350.0	375.0	387.5	412.5	425.0	450.0	475.0	487.5

M4GA3-P7*

● Serial transmission (T6G1)
DIN rail mounting (D);
external pilot (K)

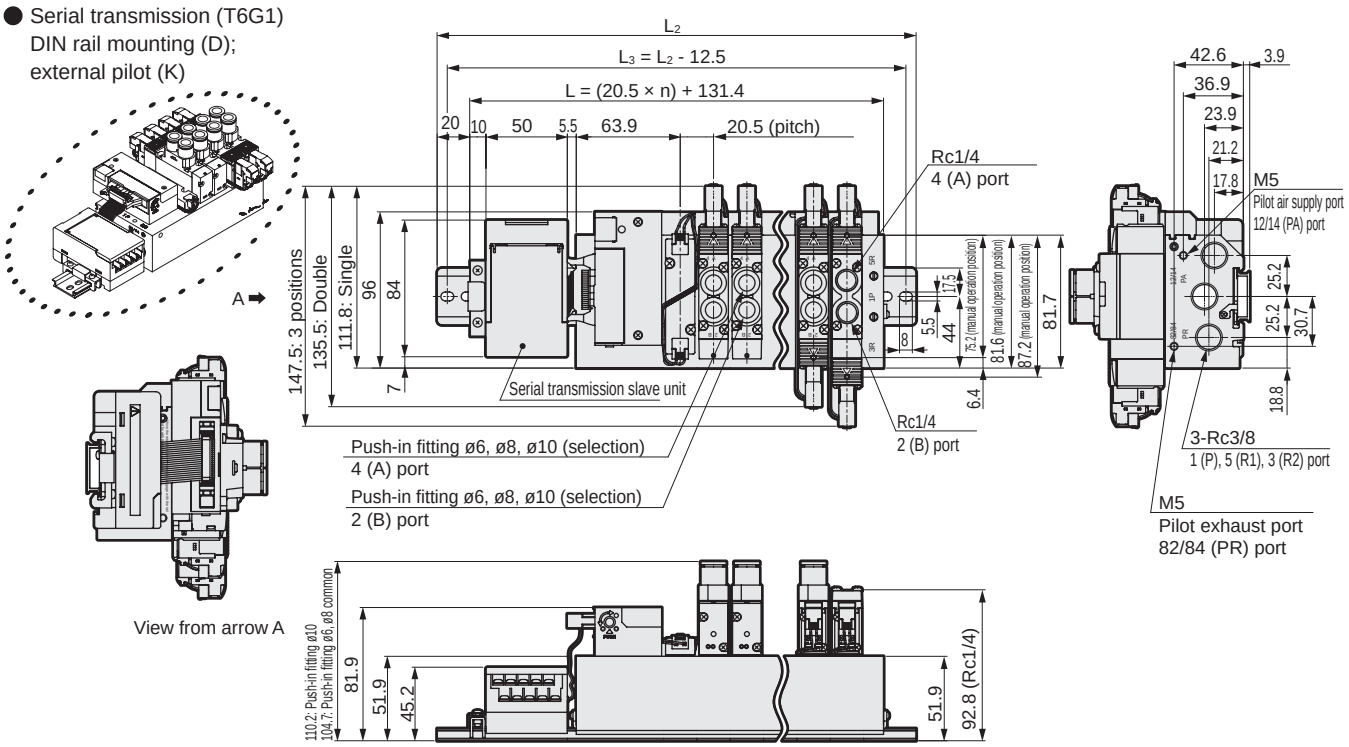

Station No.	2	3	4	5	6	7	8	9	10	11	12	13	14	15	16
L	172.4	192.9	213.4	233.9	254.4	274.9	295.4	315.9	336.4	356.9	377.4	397.9	418.4	438.9	459.4
L_2	212.5	237.5	262.5	275.0	300.0	325.0	337.5	362.5	387.5	400.0	425.0	437.5	462.5	487.5	500.0
L_3	200.0	225.0	250.0	262.5	287.5	312.5	325.0	350.0	375.0	387.5	412.5	425.0	450.0	475.0	487.5

Dimensions

M4GA3-P7*

* Refer to page 754 for details on the mounting holes.

● Serial transmission (T8□)
DIN rail mounting (D)

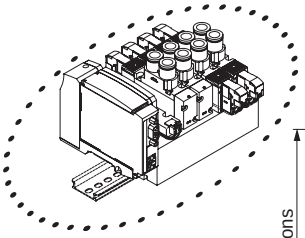

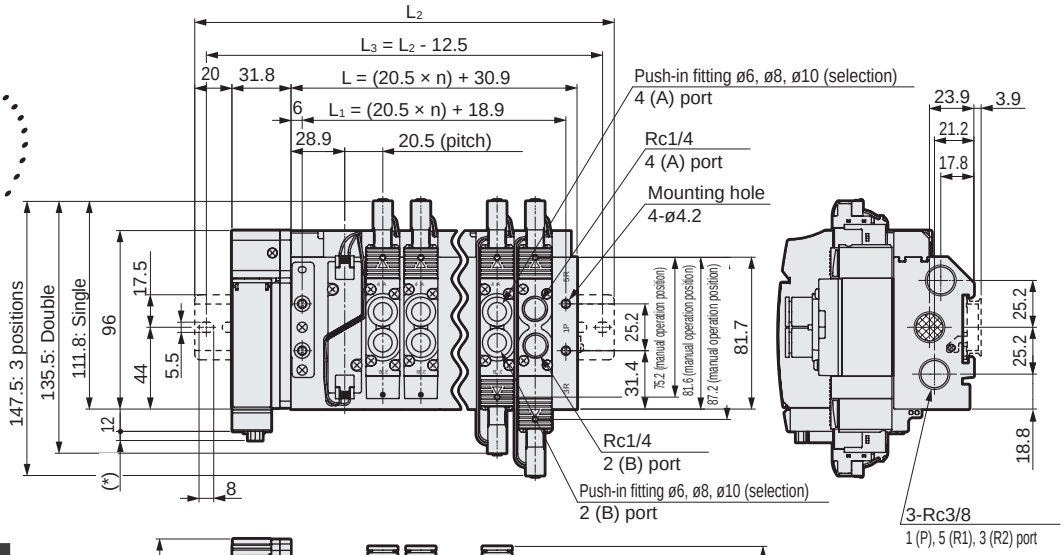

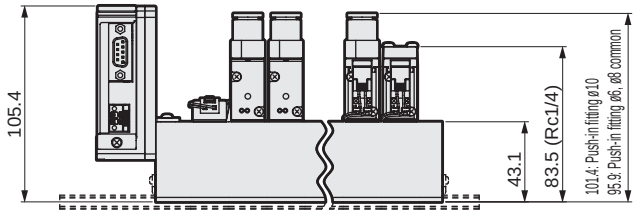

Serial transmission	(*) Dimensions
T8G□	1.0
T8P□	4.9
T8E□	1.5
T8D□	1.0
T8K□	1.0

Station No.	2	3	4	5	6	7	8	9	10	11	12	13	14	15	16
L	71.9	92.4	112.9	133.4	153.9	174.4	194.9	215.4	235.9	256.4	276.9	297.4	317.9	338.4	358.9
L_1	59.9	80.4	100.9	121.4	141.9	162.4	182.9	203.4	223.9	244.4	264.9	285.4	305.9	326.4	346.9
L_2	150.0	175.0	187.5	212.5	237.5	250.0	275.0	287.5	312.5	337.5	350.0	375.0	400.0	412.5	437.5
L_3	137.5	162.5	175.0	200.0	225.0	237.5	262.5	275.0	300.0	325.0	337.5	362.5	387.5	400.0	425.0

M4GA3-P7*

● Serial transmission (T8□)
DIN rail mounting (D); external pilot (K)

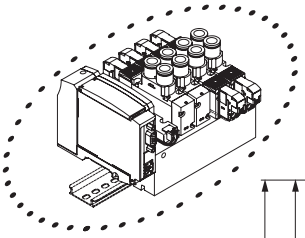

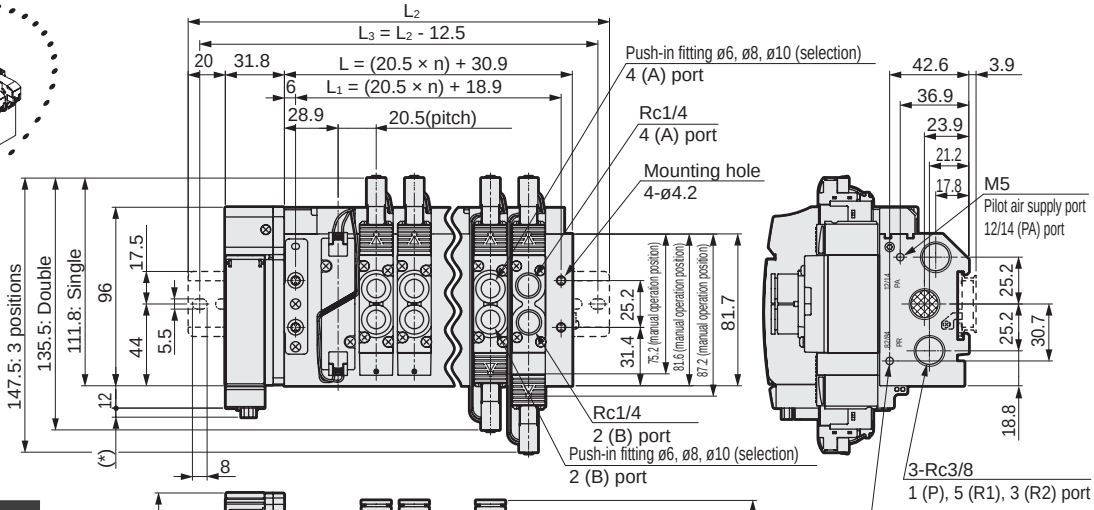

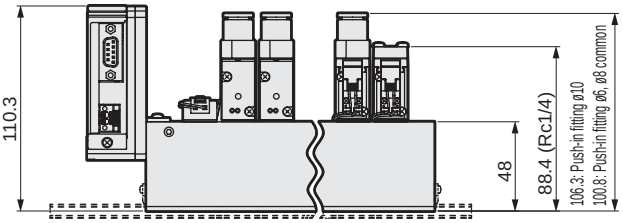

Serial transmission	(*) Dimensions
T8G□	1.0
T8P□	4.9
T8E□	1.5
T8D□	1.0
T8K□	1.0

Station No.	2	3	4	5	6	7	8	9	10	11	12	13	14	15	16
L	71.9	92.4	112.9	133.4	153.9	174.4	194.9	215.4	235.9	256.4	276.9	297.4	317.9	338.4	358.9
L_1	59.9	80.4	100.9	121.4	141.9	162.4	182.9	203.4	223.9	244.4	264.9	285.4	305.9	326.4	346.9
L_2	150.0	175.0	187.5	212.5	237.5	250.0	275.0	287.5	312.5	337.5	350.0	375.0	400.0	412.5	437.5
L_3	137.5	162.5	175.0	200.0	225.0	237.5	262.5	275.0	300.0	325.0	337.5	362.5	387.5	400.0	425.0

SCPD3
SCM
SSD2
MDC2
SMG
LCM
LCR
LCG
LCX
STM
STG
STR2
MRL2
GRC
Cylinder switch
MN3E MN4E
4GA/B
M4GA/B
MN4GA/B
F.R (module unit)
Clean F.R
Precision R
Press gauge Diff. press gauge
Electro-pneumatic R
Speed controller
Auxiliary valve
Fitting/ tube
Clean air unit
Pressure sensor
Flow rate sensor
Valve for air blow
Ending

Electric block part: dimensions

● Common terminal block (M3 thread) T10

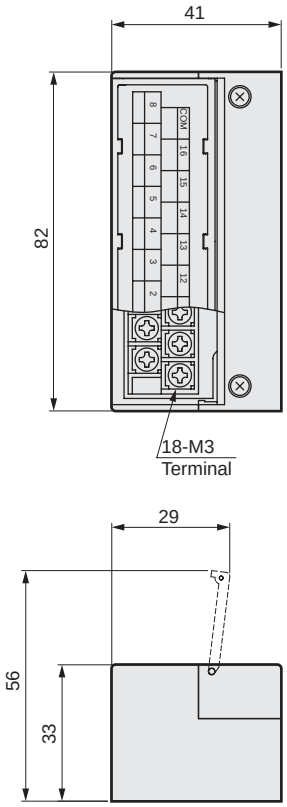

● Common terminal block (clamping) T11

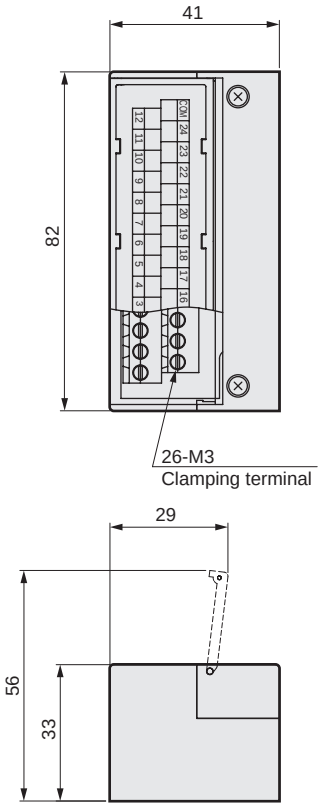

● D sub-connector T30

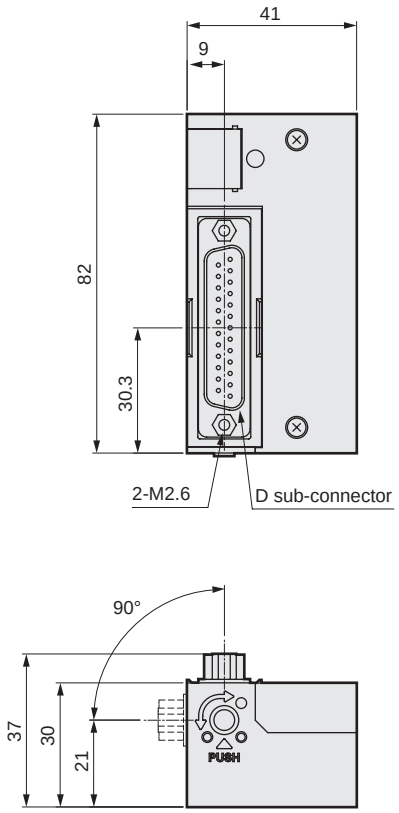

● 20 pin flat cable connector (with power supply terminal) T50

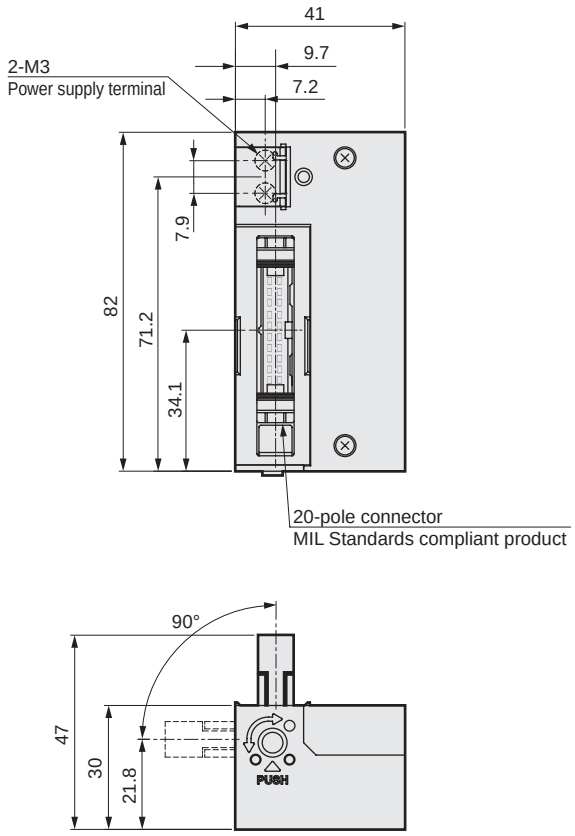

Electric block part: dimensions

● 20 pin flat cable connector (without power supply terminal)
T51

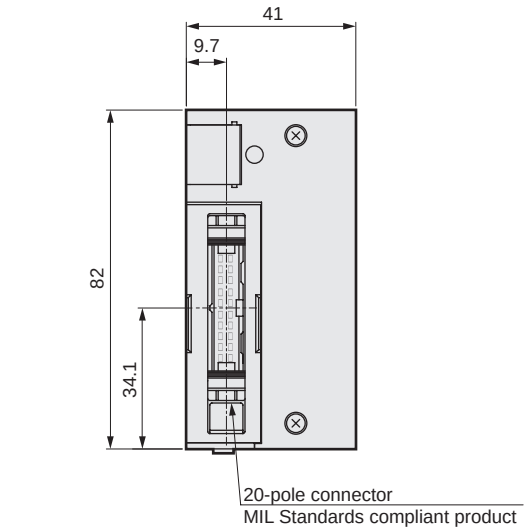

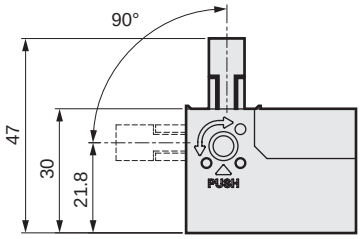

● 10 pin flat cable connector (without power supply terminal)
T52

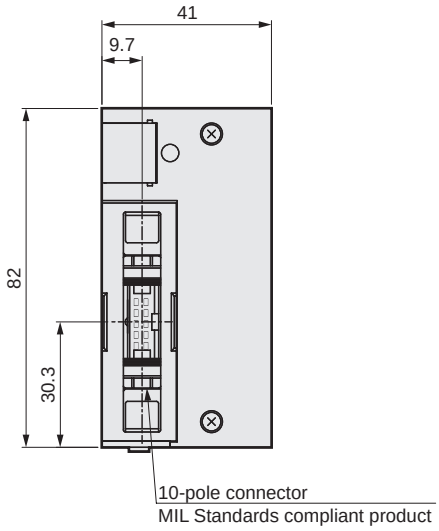

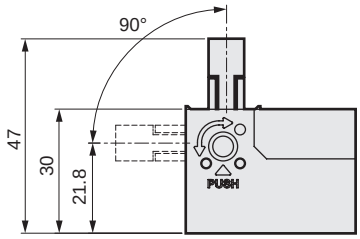

● 26 pin flat cable connector (without power supply terminal)
T53

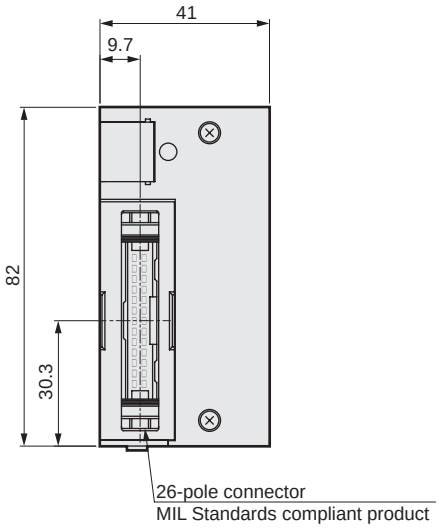

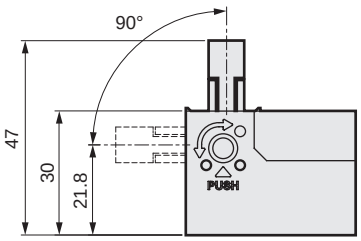

● Discrete serial transmission slave unit (connector type)

4GR - OPP3 - 1G

Ⓐ Wiring method

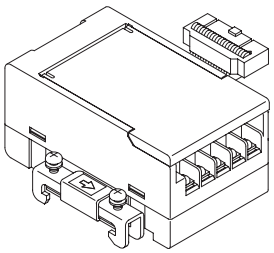

Code	Content			
Ⓐ Wiring method				
1G	T6G1	CC-Link	NPN	16 points

● Discrete serial transmission slave unit (thin slot type)

4GR - OPP7 - 2G

Ⓐ Wiring method

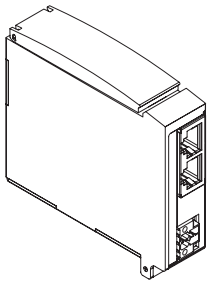

Code	Content			
Ⓐ Wiring method				
1G	T8G1	CC-Link	NPN	16 points
2G	T8G2			32 points
1G-P	T8GP1		PNP	16 points
2G-P	T8GP2			32 points
1P	T8P1	PROFIBUS-DP	NPN	16 points
2P	T8P2			32 points
1P-P	T8PP1		PNP	16 points
2P-P	T8PP2			32 points
1EC	T8EC1	EtherCAT	NPN	16 points
2EC	T8EC2			32 points
1EC-P	T8ECP1		PNP	16 points
2EC-P	T8ECP2			32 points
1EN	T8EN1	EtherNet/IP	NPN	16 points
2EN	T8EN2			32 points
1EN-P	T8ENP1		PNP	16 points
2EN-P	T8ENP2			32 points
1D	T8D1	DeviceNet	NPN	16 points
2D	T8D2			32 points
1D-P	T8DP1		PNP	16 points
2D-P	T8DP2			32 points
1EB	T8EB1	CC-Link IEF Basic	NPN	16 points
2EB	T8EB2			32 points
1EB-P	T8EBP1		PNP	16 points
2EB-P	T8EBP2			32 points
1EF	T8EF1	CC-Link IE Field	NPN	16 points
2EF	T8EF2			32 points
1EF-P	T8EFP1		PNP	16 points
2EF-P	T8EFP2			32 points
1EP	T8EP1	PROFINET	NPN	16 points
2EP	T8EP2			32 points
1EP-P	T8EPP1		PNP	16 points
2EP-P	T8EPP2			32 points
1KC	T8KC1	IO-Link	NPN	16 points
2KC	T8KC2			32 points
1KC-P	T8KCP1		PNP	16 points
2KC-P	T8KCP2			32 points

MEMO

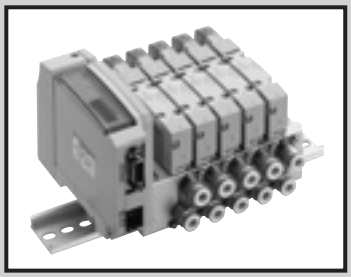

Reduced wiring manifold
Base piping
Direct mount DIN rail mount

M3GB1/2-T* (D) Series
M4GB1/2/3-T* (D) Series

● Applicable cylinder bore size: ø20 to ø100

RoHS CAD

JIS symbol

● Dual 3-port valve integrated

(A side valve: NC, B side valve: NC)

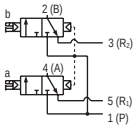

(A side valve: NC, B side valve: NO)

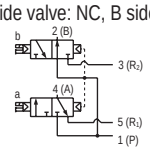

(A side valve: NO, B side valve: NC)

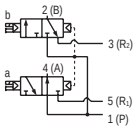

(A side valve: NO, B side valve: NO)

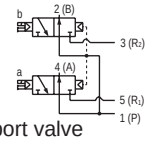

● 5-port valve

2-position single

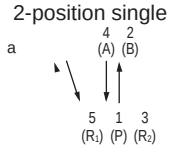

2-position double

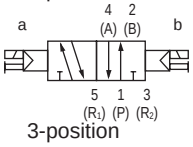

3-position
All ports closed

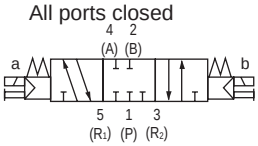

3-position A/B/R connection

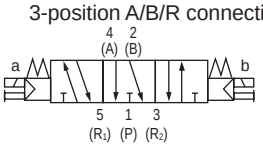

3 positions P/A/B connection

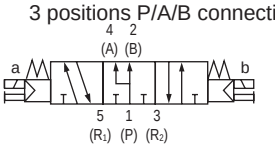

Structure and material restriction

	Structure	Material restriction			Model No.
P7 Series	Dust generation preventing				– P70
	Dust generation preventing	Copper-based materials prohibited	Silicon-based materials prohibited	Halogen-based materials prohibited (fluorine, chlorine, bromine)	– P74 Custom order product

Manifold common specifications

Descriptions		
Manifold		Reduced wiring integrated base
Mounting method		Direct mount DIN rail mount
Supply and exhaust method		Common supply/common exhaust (With internal exhaust check valve)
Pilot exhaust method	Internal pilot	Main valve/pilot valve common exhaust (Pilot exhaust check valve integrated)
	External pilot	Main valve/pilot valve individual exhaust
Piping direction		Lateral base
Valve and operation		Pilot operated soft spool valve
Working fluid		Compressed air
Max. working pressure MPa		0.7
Min. working pressure MPa		0.2 (*3)
Proof pressure MPa		1.05
Ambient temperature °C		-5 to 55 (no freezing)
Fluid temperature °C		5 to 55
Manual operating device		Common for non-locking/locking (standard)
Lubrication (*1)		Not required
Degree of protection (*2)		Dust proof
Vibration resistance m/s²		50 or less
Shock resistance m/s²		300 or less
Atmosphere		Containing corrosive gas is not permissible

Electrical specifications

Descriptions				
Rated voltage V		T1□, T30□, T5□		T6G1, T8□
		DC24	DC12	DC24
Voltage fluctuation range (*4)		±10%		+10%, –5%
Holding current A	Standard	0.017	0.034	0.017
	Low exoergic/ energy-saving circuit built-in	0.005	0.010	0.005
Power consumption W	Standard	0.4		
	Low exoergic/ energy-saving circuit built-in	0.1		
Thermal class		B		
Surge suppressor (*5)		Zener diode		
Indicator		LED		

*1: Use the turbine oil Class 1 ISO VG32 for lubrication. Excessive or intermittent lubrication results in unstable operation.
*2: Avoid water drops or oil, etc. during use.
*3: The working pressure range is 0 to 0.7 MPa when the external pilot (option Code: K) is selected. Set the external pilot pressure between 0.2 and 0.7 MPa.
*4: As for T6G1 and T8□ (serial transmission), because a voltage drop may occur due to the internal circuit design, be careful to check for the voltage fluctuation range.
*5 When selecting the type of low exoergic/energy-saving circuit built-in or surgeless, a diode is used.

Common specifications

Descriptions		M3GB1/M4GB1	M3GB2/M4GB2	M3GB3/M4GB3
Port size	A/B port	Barbed fitting ø1.8 Push-in fitting ø1.8, ø4, ø6, ø8 (*6) M5	Push-in fitting ø4, ø6, ø8, ø10 (*6) Rc1/8	Push-in fitting ø6, ø8, ø10 Rc1/4
	P/R1/R2 port	Rc1/8	Rc1/4	Rc3/8

*6: This is a custom order product.

T1 □, T30 □, T5 □

Descriptions		M3GB1/M4GB1		M3GB2/M4GB2		M3GB3/M4GB3	
		Direct mount	DIN rail mount	Direct mount	DIN rail mount	Direct mount	DIN rail mount
Max. station number	Standard (Internal pilot)	20 stations	16 stations	20 stations	16 stations	16 stations	
	External pilot	12 stations					
Manifold base Weight calculation formula (n: station No.) g	Standard	43n + 335	45n + 348	80n + 398	82n + 431	124n + 548	126n + 582
	External pilot	44n + 330	46n + 344	88n + 433	90n + 467	129n + 577	131n + 606

T6G1

Descriptions		M3GB1/M4GB1	M3GB2/M4GB2	M3GB3/M4GB3
		DIN rail mount	DIN rail mount	DIN rail mount
Max. station number	Standard (Internal pilot)	16 stations	16 stations	16 stations
	External pilot	12 stations		
Manifold base Weight calculation formula (n: station No.) g	Standard	45n + 495	82n + 578	126n + 729
	External pilot	46n + 491	90n + 615	131n + 753

T8 □

Descriptions		M3GB1/M4GB1		M3GB2/M4GB2		M3GB3/M4GB3	
		Direct mount	DIN rail mount	Direct mount	DIN rail mount	Direct mount	DIN rail mount
Max. station number	Standard (Internal pilot)	20 stations	16 stations	20 stations	16 stations	16 stations	
	External pilot	12 stations					
Manifold base Weight calculation formula (n: station No.) g	Standard	46n + 305	49n + 332	83n + 318	86n + 350	128n + 384	132n + 416
	External pilot	48n + 312	51n + 339	91n + 336	94n + 368	146n + 417	150n + 449

Manifold base weight stands for a value for the screw connection specifications when a DIN rail, electrical component block, or slave unit is equipped.
The max. station number of the manifold is limited by the max. number of solenoid for each of the following wiring specifications.

Flow characteristics

Model No.	Solenoid position		P → A/B C [dm³/(s·bar)]	P → A/B b	A/B → R1/R2 C [dm³/(s·bar)]	A/B → R1/R2 b
M3GB1 M4GB1	Dual 3-port valve integrated		0.86	0.35	1.1 (0.67)	0.22 (0.23)
	2-position		1.1	0.22	1.2 (0.70)	0.20 (0.10)
	3-position	All ports closed	0.98	0.22	1.1 —	0.24 —
		ABR connection	0.97	0.35	1.3 (0.68)	0.22 (0.24)
		PAB connection	1.1	0.38	1.1 —	0.21 —
M3GB2 M4GB2	Dual 3-port valve integrated		1.7	0.44	2.1 (1.6)	0.32 (0.30)
	2-position		2.4	0.34	2.7 (1.7)	0.24 (0.31)
	3-position	All ports closed	2.2	0.34	2.4 —	0.29 —
		ABR connection	2.2	0.34	2.8 (1.8)	0.24 (0.27)
		PAB connection	2.4	0.29	2.4 —	0.29 —
M4GB3	2-position		3.5	0.34	3.8 (2.6)	0.11 (0.27)
	3-position	All ports closed	3.1	0.33	3.3 —	0.22 —
		ABR connection	3.0	0.30	3.8 (2.7)	0.11 (0.22)
		PAB connection	3.6	0.36	3.3 —	0.28 —

Note 1: Effective cross-sectional area S and sonic conductance C are converted as S ≈ 5.0 × C. Note 2: Values in ( ) apply when the exhaust check valve attached.

Wiring specifications

Descriptions	T10□ Common terminal block	T11□ Common terminal block	T30□ D sub-connector	T50□ Flat cable 20 pin	T51□ Flat cable 20 pin	T52□ Flat cable 10 pin	T53□ Flat cable 26 pin
Connector and terminal block specifications	M3 thread tightening 18 terminals	clamping 26 terminals	D sub-connector 25 pin	MIL-C-83503 standards conformed Pressure welding socket 20 pin	MIL-C-83503 standards conformed Pressure welding socket 20 pin	MIL-C-83503 standards conformed Pressure welding socket 10 pin	MIL-C-83503 standards conformed Pressure welding socket 26 pin
Max. number of solenoid	16 points	24 points	24 points	16 points	18 points	8 points	24 points
Manifold internal wiring	Details on pages 714 to 721						

Electric block position
Blank : Left side
R : Right side

Left side: T□

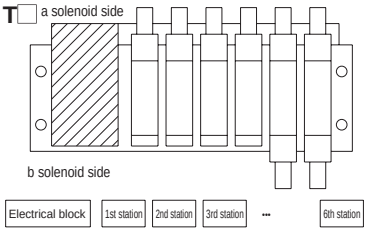

Right side: T□R

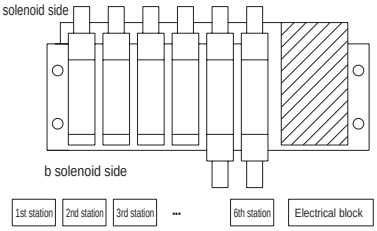

Arrangement
Blank : Standard sequential
W : Double wiring

(Example) T50□

Manifold specifications

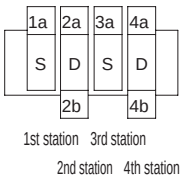

Standard wiring (sequential): Blank

Connector pin No.	1	2	3	4	5	6
Valve solenoid No.	1a	2a	2b	3a	4a	4b

Double wiring: W

Connector pin No.	1	2	3	4	5	6	7	8
Valve solenoid No.	1a	Void	2a	2b	3a	Void	4a	4b

Serial transmission slave unit specifications

Download the communication configuration file from the CKD website (https://www.ckd.co.jp/en/).

Item		T6G1
Network name		CC-Link ver 1.10
Power supply voltage	Unit side	24 VDC ±10%
	Valve side	24 VDC +10% -5%
Current consumption	Unit side	100 mA or less (when all output points are ON)
	Valve side	15 mA or less (when all output points are OFF)
Output points		16 points
Occupied number		1 station
Operation display		LED (power and communication status)

Item		T8G1 T8G2	T8GP1 T8GP2	T8P1 T8P2	T8PP1 T8PP2	T8EC1 T8EC2	T8ECP1 T8ECP2	T8EN1 T8EN2	T8ENP1 T8ENP2	T8D1 T8D2	T8DP1 T8DP2	T8EB1 T8EB2	T8EBP1 T8EBP2	T8EF1 T8EF2	T8EFP1 T8EFP2	T8EP1 T8EP2	T8EPP1 T8EPP2	T8KC1 T8KC2	T8KCP1 T8KCP2
Communication system name		CC-Link ver1.10		PROFIBUS-DP (V0)		EtherCAT		EtherNet/IP		DeviceNet		CC-Link IEF Basic		CC-Link IE Field		PROFINET		IO-LINK	
Power supply voltage	Unit side	24 VDC ±10% (*Only T8D is 11 to 25 VDC)																	
	Valve side	24 VDC + 10%, -5%																	
Current consumption	Unit side	60 mA or less (when all output points are ON)		60 mA or less (when all output points are ON)		110 mA or less (when all output points are ON)		120 mA or less (when all output points are ON)		70 mA or less (when all output points are ON)		130 mA or less (when all output points are ON)		140 mA or less (when all output points are ON)		130 mA or less (when all output points are ON)		50 mA or less (when all output points are ON)	
	Valve side	T8□1: 15 mA or less T8□2: 20 mA or less (when all output points are ON) Load current is not included								15 mA or less (when all output points are ON) Load current is not included									
Output points		T8□1: 16 points, T8□2: 32 points																	
Occupied number		1 station																	
Operation display		LED (power and communication status)																	
Output style		NPN output	PNP output	NPN output	PNP output	NPN output	PNP output	NPN output	PNP output	NPN output	PNP output	NPN output	PNP output	NPN output	PNP output	NPN output	PNP output	NPN output	PNP output

M4GB1/2/3-T* (D) Series

Reduced wiring manifold; base piping

How to order

Manifold model No.

M 4GB1 1 0 R - C6 - T30 W H D - ○ - 3 - P70

3-port manifold model No.

M 3GB1 66 0 R - C6 - T30 W H D - ○ - 3 - P70

● Discrete valve for mounting base

4GB1 1 9 R - 00 - A2N ○ H —— 3 - P70

● 3-port discrete valve for mounting base

3GB1 66 9 R - 00 - A2N ○ H —— 3 - P70

Ⓑ Solenoid position

Ⓐ Model No.

Ⓒ Port size
*3
*4

Ⓓ Reduced wiring

Ⓔ Terminal and connector pin wiring

Ⓕ Option

Ⓖ Mount

Ⓗ Station No.

Ⓘ Voltage

Ⓙ Clean room specifications

●Refer to page 717 for the model No. of cables with D-sub-connector.

●Refer to page 713 for the model No. of cables for flat cable connector.

Ⓑ Solenoid position

			Ⓐ Model No. 3GB1	3GB2	4GB1	4GB2	4GB3
1	2-position single				●	●	●
2	2-position double				●	●	●
3	3-position all ports closed				●	●	●
4	3-position ABR connection				●	●	●
5	3-position PAB connection				●	●	●
66	Dual 3-port valve integrated *1, *2	A side valve: Normally closed B side valve: Normally closed	●	●			
67		A side valve: Normally closed B side valve: Normally open	●	●			
76		A side valve: Normally open B side valve: Normally closed	●	●			
77		A side valve: Normally open B side valve: Normally open	●	●			
8	Mixed manifold (In case of multiple solenoid positions)		●	●	●	●	●

Ⓒ Port size

Port	4 (A)/2 (B) port		P/R1/R2 port (2)=Rc1/8 (3)=Rc1/4 (4)=Rc3/8				
CF	ø1.8 barbed fitting (applicable tube UP-9102-**)		(2)		(2)		
C18	ø1.8 push-in fitting (applicable tube UP-9402-**)		(2)		(2)		
C4	ø4 push-in fitting		(2)	(3)	(2)	(3)	
C6	ø6 push-in fitting		(2)	(3)	(2)	(3)	(4)
C8	ø8 push-in fitting	*5	(2)	(3)	(2)	(3)	(4)
C10	ø10 push-in fitting	*5		(3)		(3)	(4)
CL18	ø1.8 radial facing-up push-in fitting (applicable tube UP-9402-**)				(2)		
CL4	ø4 radial facing-up push-in fitting				(2)		
CL6	ø6 radial facing-up push-in fitting				(2)	(3)	
CL8	ø8 radial facing-up push-in fitting					(3)	(4)
CL10	ø10 radial facing-up push-in fitting						(4)
CD18	ø1.8 radial facing-down push-in fitting (applicable tube UP-9402-**)		(2)		(2)		
CD4	ø4 radial facing-down push-in fitting		(2)		(2)		
CD6	ø6 radial facing-down push-in fitting		(2)	(3)	(2)	(3)	
CD8	ø8 radial facing-down push-in fitting			(3)		(3)	(4)
CD10	ø10 radial facing-down push-in fitting						(4)
CX	Push-in fitting mix		(2)	(3)	(2)	(3)	(4)
M5	M5		(2)		(2)		
06	Rc1/8			(3)		(3)	
08	Rc1/4						(4)
Port	**4 (A)/2 (B) port**		**P/R1/R2 port (5)=1/8NPT (6)=1/4NPT (7)=3/8NPT**				
C3N	ø1/8" push-in fitting		(5)		(5)		
C4N	ø5/32" push-in fitting		(5)		(5)		
C6N	ø1/4" push-in fitting			(6)		(6)	
C8N	ø5/16" push-in fitting			(6)		(6)	(7)
C10N	ø3/8" push-in fitting						(7)
CL3N	Radial ø1/8" push-in fitting upward	(*6)			(5)		
CL4N	Radial ø5/32" push-in fitting upward	(*6)			(5)		
CL6N	Radial ø1/4" push-in fitting upward	(*6)				(6)	
CL8N	Radial ø5/16" push-in fitting upward	(*6)				(6)	
CXN	Push-in fitting mix		(5)	(6)	(5)	(6)	(7)
M5N	M5		(5)		(5)		
06N	NPT1/8			(6)		(6)	
08N	NPT1/4	(*6)					(7)
Port	**4 (A)/2 (B) port**		**P/R1/R2 port (8)=G1/8 (9)=G1/4 (10)=G3/8**				
C4G	ø4 push-in fitting		(8)	(9)	(8)	(9)	
C6G	ø6 push-in fitting		(8)	(9)	(8)	(9)	
C8G	ø8 push-in fitting			(9)		(9)	(10)
C10G	ø10 push-in fitting						(10)
CL4G	ø4 radial push-in fitting upward	(*6)			(8)		
CL6G	ø6 radial push-in fitting upward	(*6)			(8)	(9)	
CL8G	ø8 radial push-in fitting upward	(*6)				(9)	
CXG	Push-in fitting mix		(8)	(9)	(8)	(9)	
M5G	M5		(8)		(8)		
06G	G1/8			(9)		(9)	
08G	G1/4						(10)
00	Discrete valve for integrated base		●	●	●	●	●

Ⓓ Reduced wiring

Refer to the next page for electrical connections.

is not available.

Precautions for model No. selection

*1: Select M4GA*80R when mixing with the 3, 5-port valves.
Select M3GB*80R when mixing with the masking plate.

*2: Combination with the external pilot (K) is not supported. Dimensions are the same as the respective 2-position double solenoid.

3: CL radial push-in fitting (facing up) will only support single solenoid manifolds. The port A is a long elbow and the port B is short elbow.

*4: For radial push-in fitting, A/B port sizes do not differ.

*5: C8 for 4G1, C10 for 4G2 are custom order products. They do not support push-in fitting mix.

*6: Made-to-order product.

M4GB1/2/3-T* (D) Series

Reduced wiring manifold; base piping

			Ⓐ Model No.				
			3GB1	3GB2	4GB1	4GB2	4GB3
Ⓓ Reduced wiring (lamp and surge suppressor provided as standard) 12/24 VDC							
T10	Common terminal block (M3 thread)	Left side specifications	●	●	●	●	●
T10R		Right side specifications	●	●	●	●	●
T11	Common terminal block (clamping)	Left side specifications	●	●	●	●	●
T11R		Right side specifications	●	●	●	●	●
T30	D sub-connector	Left side specifications	●	●	●	●	●
T30R		Right side specifications	●	●	●	●	●
T50	20 pin flat cable connector (with power supply terminal)	Left side specifications	●	●	●	●	●
T50R		Right side specifications	●	●	●	●	●
T51	20 pin flat cable connector (without power supply terminal)	Left side specifications	●	●	●	●	●
T51R		Right side specifications	●	●	●	●	●
T52	10 pin flat cable connector (without power supply terminal)	Left side specifications	●	●	●	●	●
T52R		Right side specifications	●	●	●	●	●
T53	26 pin flat cable connector (without power supply terminal)	Left side specifications	●	●	●	●	●
T53R		Right side specifications	●	●	●	●	●
Ⓓ Serial transmission (lamp and surge suppressor provided as standard) 24 VDC							
T6G1	CC-Link	NPN 16 points	●	●	●	●	●
T8G1	CC-Link	NPN 16 points	●	●	●	●	●
T8G2		NPN 32 points	●	●	●	●	●
T8GP1		PNP 16 points	●	●	●	●	●
T8GP2		PNP 32 points	●	●	●	●	●
T8P1	PROFIBUS-DP	NPN 16 points	●	●	●	●	●
T8P2		NPN 32 points	●	●	●	●	●
T8PP1		PNP 16 points	●	●	●	●	●
T8PP2		PNP 32 points	●	●	●	●	●
T8EC1	EtherCAT	NPN 16 points	●	●	●	●	●
T8EC2		NPN 32 points	●	●	●	●	●
T8ECP1		PNP 16 points	●	●	●	●	●
T8ECP2		PNP 32 points	●	●	●	●	●
T8EN1	EtherNet/IP	NPN 16 points	●	●	●	●	●
T8EN2		NPN 32 points	●	●	●	●	●
T8ENP1		PNP 16 points	●	●	●	●	●
T8ENP2		PNP 32 points	●	●	●	●	●
T8D1	DeviceNet	NPN 16 points	●	●	●	●	●
T8D2		NPN 32 points	●	●	●	●	●
T8DP1		PNP 16 points	●	●	●	●	●
T8DP2		PNP 32 points	●	●	●	●	●
T8EB1	CC-Link IEF Basic	NPN 16 points	●	●	●	●	●
T8EB2		NPN 32 points	●	●	●	●	●
T8EBP1		PNP 16 points	●	●	●	●	●
T8EBP2		PNP 32 points	●	●	●	●	●
T8EF1	CC-Link IE Field	NPN 16 points	●	●	●	●	●
T8EF2		NPN 32 points	●	●	●	●	●
T8EFP1		PNP 16 points	●	●	●	●	●
T8EFP2		PNP 32 points	●	●	●	●	●
T8EP1	PROFINET	NPN 16 points	●	●	●	●	●
T8EP2		NPN 32 points	●	●	●	●	●
T8EPP1		PNP 16 points	●	●	●	●	●
T8EPP2		PNP 32 points	●	●	●	●	●
T8KC1	IO-Link	NPN 16 points	●	●	●	●	●
T8KC2		NPN 32 points	●	●	●	●	●
T8KCP1		PNP 16 points	●	●	●	●	●
T8KCP2		PNP 32 points	●	●	●	●	●
A2N	Without lead wire (no socket)	with surge suppressor and indicator lamp	●	●	●	●	●
Ⓔ Terminal and connector pin wiring							
Blank	Standard wiring	(*7)	●	●	●	●	●
W	Double wiring	(*7)	●	●	●	●	●
W1	Double wiring (with single spare wiring)	(*7) (*8)	●	●	●	●	●
Ⓕ Option							
Blank	Manual override of non-locking/locking common		●	●	●	●	●
M	Manual override of non-locking		●	●	●	●	●
H	With exhaust check valve	(*9)	●	●	●	●	●
K	External pilot	(*10)	●	●	●	●	●
A	Ozone/coolant proof		●	●	●	●	●
S	Surgeless	(*11)	●	●	●	●	●
E	Low exoergic/energy circuit	(*11) (*12)	●	●	●	●	●
F	Port A/B filter integrated	(*13)	●	●	●	●	●
Z1	Air supply spacer	(*14)	●	●	●	●	●
Z3	Exhaust spacer	(*14)	●	●	●	●	●
Ⓖ Mount							
Blank	Direct mount		●	●	●	●	●
D	DIN rail mount		●	●	●	●	●
Ⓗ Station No.							
2 to 20	2 stations to Refer to page 562 for the max. station number per port size.		●	●	●	●	●
Ⓘ Voltage							
3	24 VDC		●	●	●	●	●
4	12 VDC		●	●	●	●	●

Ⓙ Clean room specifications (*14, 15, 16)							
	Structure	Material restriction					
P70	Exhaust treatment	-	●	●	●	●	●
P74	Exhaust treatment	Copper-/silicon-/halogen-based materials (fluorine, chlorine, bromine) are prohibited.	○	○	○	○	○

Ozone proof specifications

Cutting oil prohibited specifications

This can be set by selecting option "A" of Ⓕ in How to order.

*7: Blank ... Wired based on the type of valve used.
W* ... Wired for the double solenoid irrespective of valve used.

***8: For the single type, spare wiring (A-type socket assembly) is attached on the cap side. For the discrete valve (A2N), a holder for retaining the socket assembly is attached. Refer to page 596 for details.**

***9: 3-position all ports closed and PAB connection are not provided with the exhaust check valve (H). Refer to page 751 for details on the exhaust check.**

*10: Contact CKD when using a vacuum with the external pilot (K).

*11: Selecting a combination of surgeless "S" and the low exoergic/energy-saving circuit "E" is not allowed.

*12: Applicable to surgeless specifications

*13: P port is equipped with a filter as standard.

***14: Indicate the mounting positions and quantity of the spacers in the manifold specifications. Stacking multiple spacers is not supported. Combination with the masking plate is not supported. Refer to pages 592 to 595 for details.**

*15: A (ozone compatible) and Ⓙ clean room specifications P74 cannot be combined.

*16: Specifications which do not allow copper-based/silicon-based/halogen-based materials apply to the main valve section.

*17: P74 Series is a custom order product.

Manifold components explanation and parts list

- T10 / T10R
- T11 / T11R
- T30 / T30R
- T50 / T50R
- T51 / T51R
- T52 / T52R
- T53 / T53R

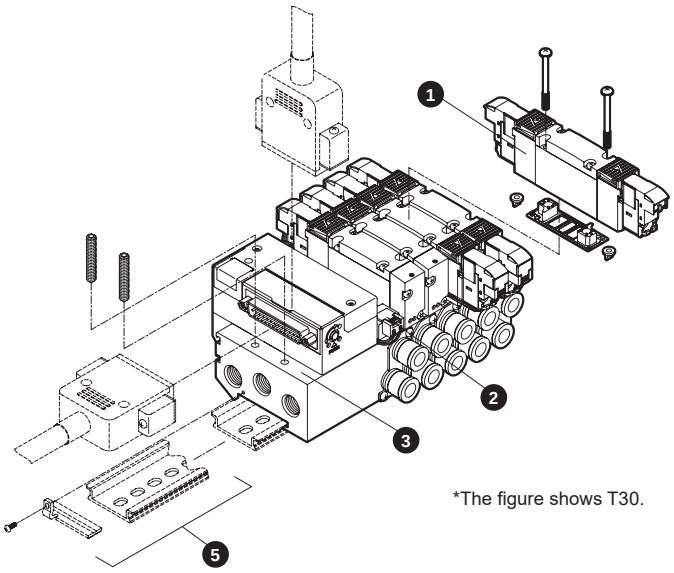

*The figure shows T30.

- T6G1

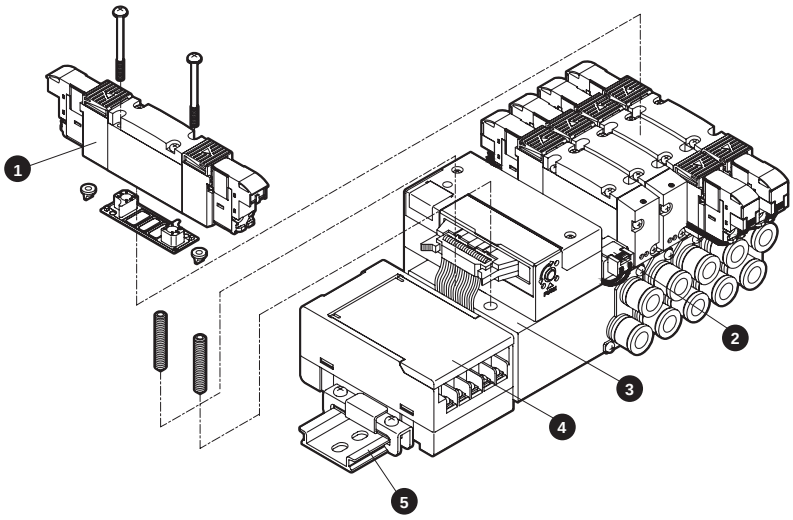

- T8□

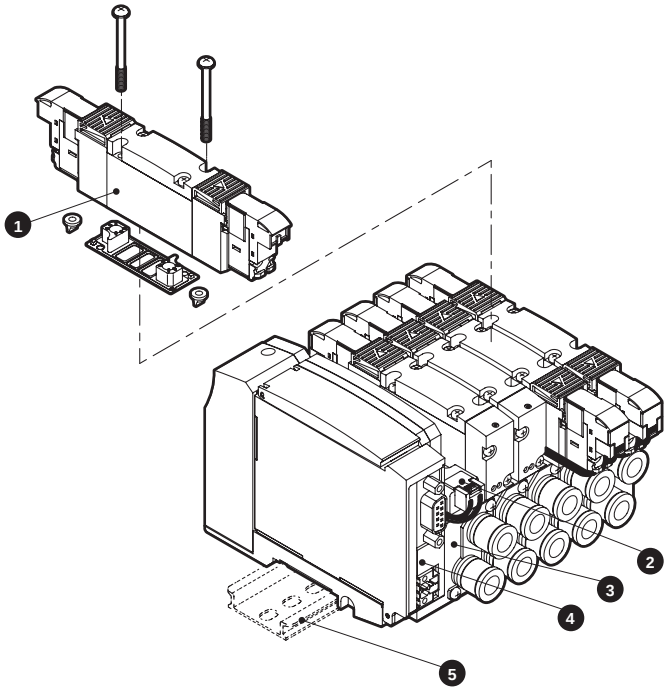

When purchasing M4GB2-T8 or M4GB3-T8 Series, its mount (direct, DIN rail) cannot be changed afterwards. For M4GB1-T8 Series, however, it is changeable.

Main components list

No.	Component name		Model No.	Descriptions	Remarks
1	Discrete valve for mounting base		3/4 GB□□9R-00-A2N Option - Voltage -P70 -P74 Solenoid position Series flow rate size	Discrete valve Gasket Set screw 2 PR check valve 2	Details on page 564
2	Masking plate	3G1/4G1	4G1R-MP-P70	Masking plate Gasket Set screw 2	* 3G3/4G3 has two PR check valves.
		3G2/4G2	4G2R-MP-P70		
		3G2/4G3	4G3R-MP-P70		
3	Manifold base assembly		M4GB□R - Port size - T56 - Option - Station No. - P70 Series flow rate size	Manifold base Electrical block	
4	Serial transmission slave unit		4GR-OPP3- Wiring method	Discrete serial transmission slave unit (connector type)	Details on page 591
			4GR-OPP7- Wiring method	Discrete serial transmission slave unit (thin slot type)	
5	DIN rail kit		4GB□R-BAA Rail length - Option D Series flow rate size		Details on page 599

Parts list

No.	Parts name	Model No.
-	Coil assembly	4GR-A2N- □ COIL- Voltage - P70 Blank: standard A: Ozone/cutting oil compatible S: Surgeless E: Low exoergic/energy-saving circuit K: External pilot
-	A connector Socket assembly Details on page 737	Series flow rate size 4GR□-SOCKET-ASSY-A□□-Row No. - P70 Blank: Left side, R: Right side A: aSOL side, B: bSOL side n: Specify the position of the valve to be connected

No.	Parts name			Model No.
-	Cartridge push-in fitting and related parts	4G1	ø1.8 barbed	4G1R-JOINT-CF-P70
			ø1.8 straight	4G1R-JOINT-C18-P70
			ø4 straight	4G1R-JOINT-C4-P70
			ø6 straight	4G1R-JOINT-C6-P70
			ø8 straight (*1)	4G1R-JOINT-C8-P70
			ø1.8 elbow	4G1R-JOINT-CL18,CLL18-P70
			ø4 elbow	4G1R-JOINT-CL4,CLL4-P70
			ø6 elbow	4G1R-JOINT-CL6,CLL6-P70
			ø1/8" straight	4G1R-JOINT-C3N-P70
			ø5/32" straight	4G1R-JOINT-C4N-P70
			ø1/8" elbow (*2)	4G1R-JOINT-CL3N,CLL3N-P70
			ø5/32" elbow (*2)	4G1R-JOINT-CL4N,CLL4N-P70
			Plug cartridge	4G1R-JOINT-CPG-P70
		4G2	ø4 straight	4G2R-JOINT-C4-P70
			ø6 straight	4G2R-JOINT-C6-P70
			ø8 straight	4G2R-JOINT-C8-P70
			ø10 straight (*3)	4G2R-JOINT-C10-P70
			ø6 elbow	4G2R-JOINT-CL6,CLL6-P70
			ø8 elbow	4G2R-JOINT-CL8,CLL8-P70
			ø1/4" straight	4G2R-JOINT-C6N-P70
			ø5/16" straight	4G2R-JOINT-C8N-P70
			ø1/4" elbow (*2)	4G2R-JOINT-CL6N,CLL6N-P70
			ø5/16" elbow (*2)	4G2R-JOINT-CL8N,CLL8N-P70
			Plug cartridge	4G2R-JOINT-CPG-P70
		4G3	ø6 straight	4G3R-JOINT-C6-P70
			ø8 straight	4G3R-JOINT-C8-P70
			ø10 straight	4G3R-JOINT-C10-P70
			ø8 elbow	4G3R-JOINT-CL8,CLL8-P70
			ø10 elbow	4G3R-JOINT-CL10,CLL10-P70
			ø5/16" straight	4G3R-JOINT-C8N-P70
			ø3/8" straight	4G3R-JOINT-C10N-P70

*1:M4GB1-C8 dedicated parts.
*2: Made to order.
*3:4G3 ø10 straight and common products.

SCPD3
SCM
SSD2
MDC2
SMG
LCM
LCR
LCG
LCX
STM
STG
STR2
MRL2
GRC
Cylinder switch
MN3E MN4E
4GA/B
M4GA/B
MN4GA/B
F.R (module unit)
Clean F.R
Precision R
Press gauge Diff. press gauge
Electro-pneumatic R
Speed controller
Auxiliary valve
Fitting/ tube
Clean air unit
Pressure sensor
Flow rate sensor
Valve for air blow
Ending

Dimensions CAD

M4GB1-P7*

***1 This drawing shows the T50. Refer to page 590 for detailed dimensions of the electric block.**
*2 The dimension of the dual 3-port valve integrated is the same as that of the double type.
*Refer to page 755 for details on mounting holes.

● Reduced wiring left side (T10/T11/T30/T50/T51/T52/T53)

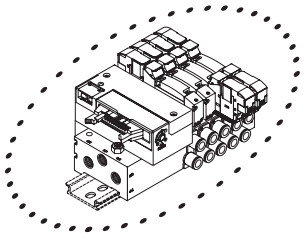

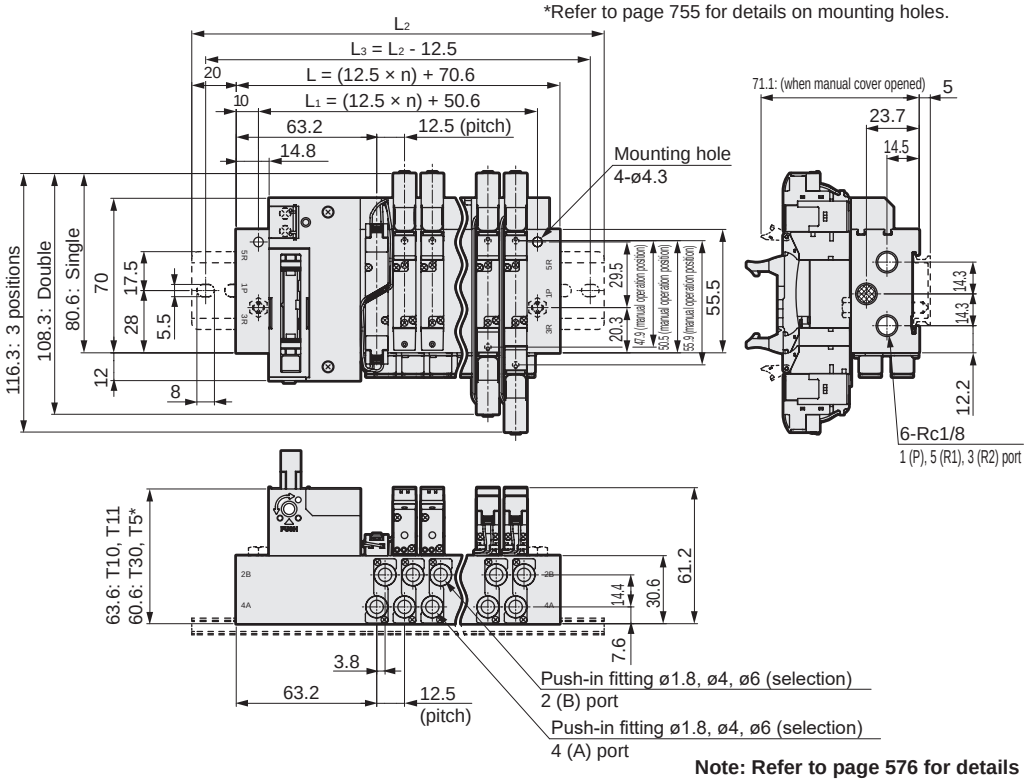

Note: Refer to page 576 for details on the push-in fitting elbow (facing up/down).

● Reduced wiring right side (T10R/T11R/T30R/T50R/T51R/T52R/T53R)

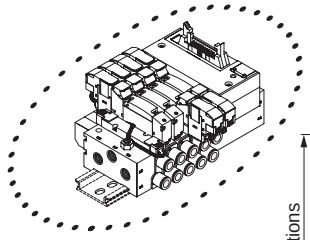

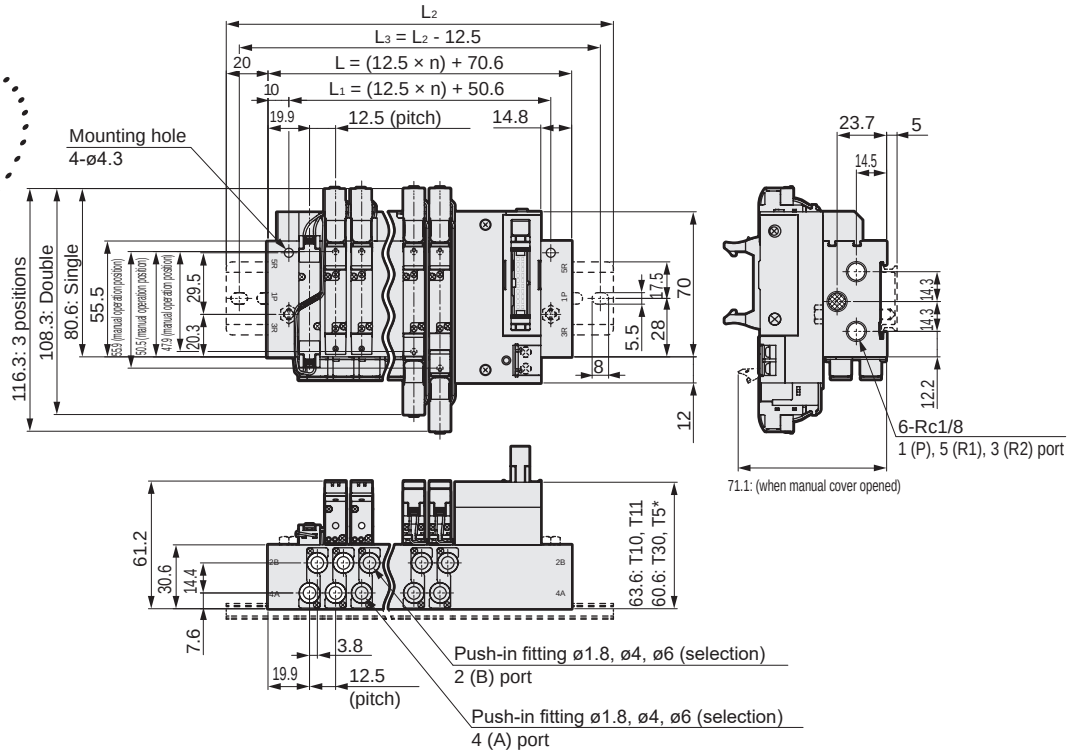

Station No.	2	3	4	5	6	7	8	9	10	11	12	13	14	15	16	17	18	19	20
L	95.6	108.1	120.6	133.1	145.6	158.1	170.6	183.1	195.6	208.1	220.6	233.1	245.6	258.1	270.6	283.1	295.6	308.1	320.6
L1	75.6	88.1	100.6	113.1	125.6	138.1	150.6	163.1	175.6	188.1	200.6	213.1	225.6	238.1	250.6	263.1	275.6	288.1	300.6
L2	137.5	150.0	162.5	175.0	187.5	200.0	212.5	225.0	237.5	250.0	262.5	275.0	287.5	300.0	312.5				
L3	125.0	137.5	150.0	162.5	175.0	187.5	200.0	212.5	225.0	237.5	250.0	262.5	275.0	287.5	300.0				

Dimensions

M4GB1-C8-P7*

*Refer to page 755 for details on mounting holes.

● Reduced wiring left side (T10/T11/T30/T50/T51/T52/T53)

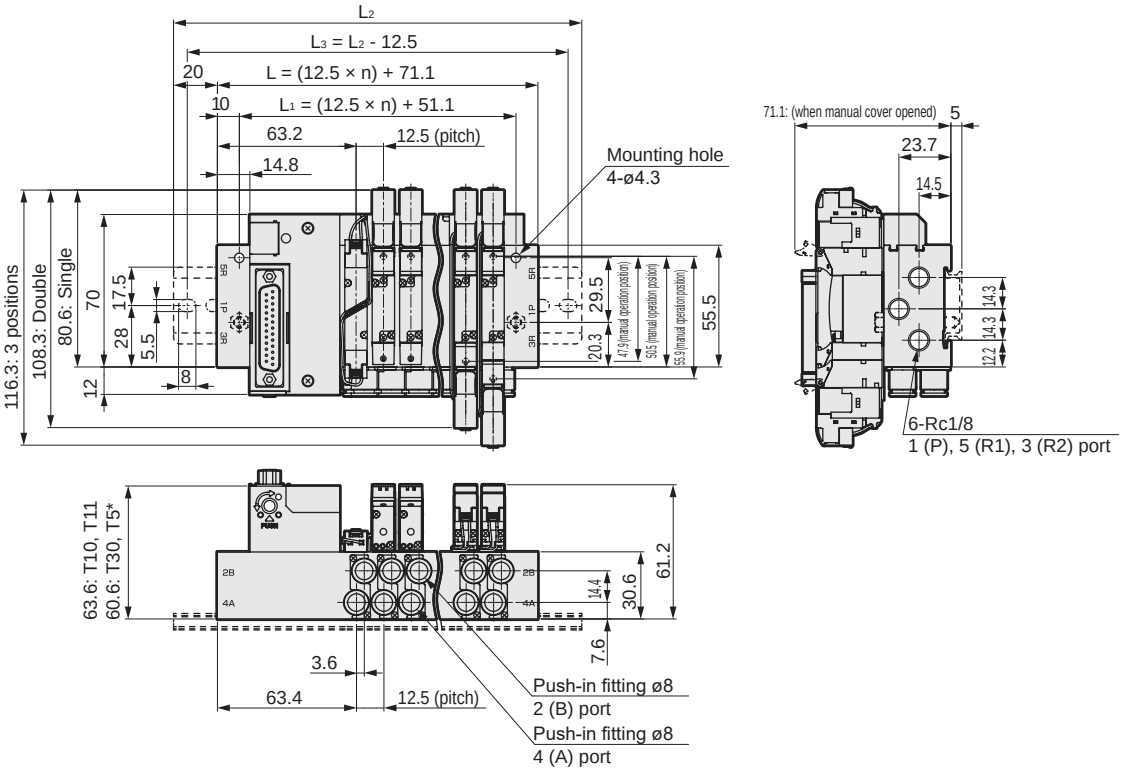

● Reduced wiring right side (T10R/T11R/T30R/T50R/T51R/T52R/T53R)

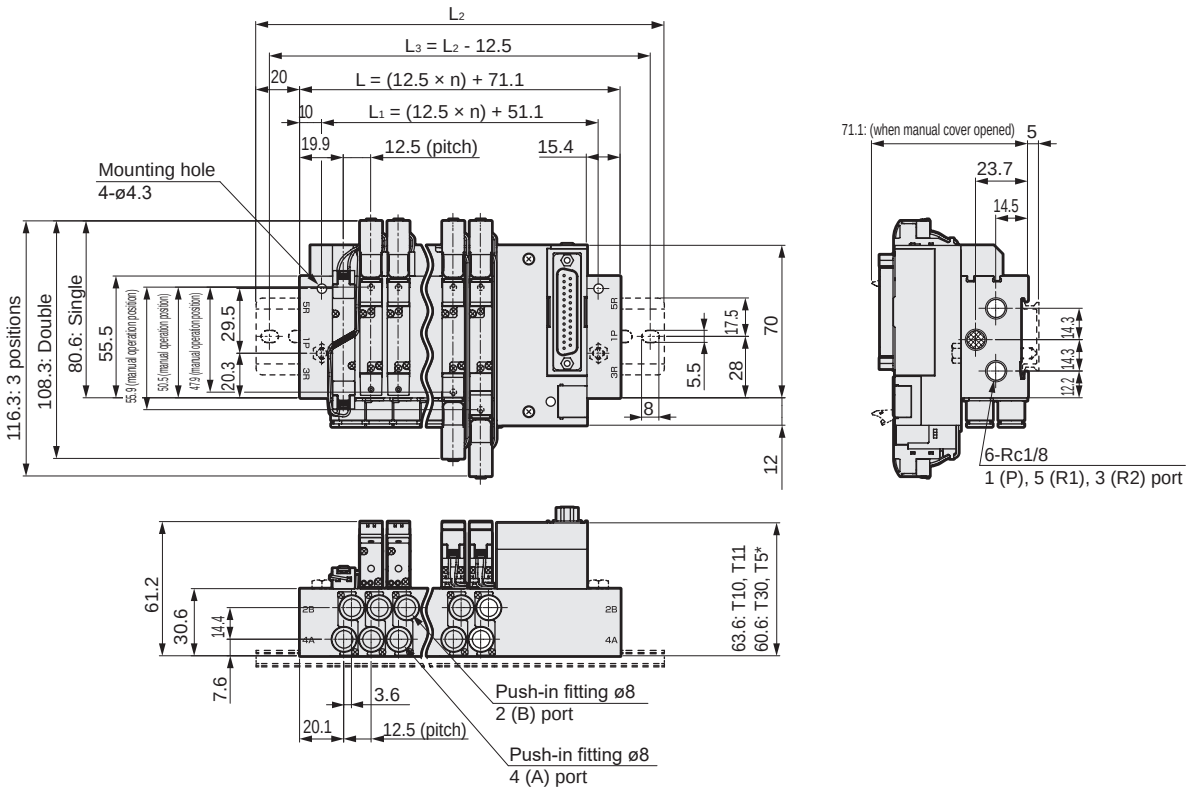

Station No.	2	3	4	5	6	7	8	9	10	11	12	13	14	15	16	17	18	19	20
L	96.1	108.6	121.1	133.6	146.1	158.6	171.1	183.6	196.1	208.6	221.1	233.6	246.1	258.6	271.1	283.6	296.1	308.6	321.1
L1	76.1	88.6	101.1	113.6	126.1	138.6	151.1	163.6	176.1	188.6	201.1	213.6	226.1	238.6	251.1	263.6	276.1	288.6	301.1
L2	137.5	150.0	162.5	175.0	187.5	200.0	212.5	225.0	237.5	250.0	262.5	275.0	287.5	300.0	312.5				
L3	125.0	137.5	150.0	162.5	175.0	187.5	200.0	212.5	225.0	237.5	250.0	262.5	275.0	287.5	300.0				

SCPD3
SCM
SSD2
MDC2
SMG
LCM
LCR
LCG
LCX
STM
STG
STR2
MRL2
GRC
Cylinder switch
MN3E MN4E
4GA/B
M4GA/B
MN4GA/B
F.R (module unit)
Clean F.R
Precision R
Press gauge Diff. press gauge
Electro-pneumatic R
Speed controller
Auxiliary valve
Fitting/ tube
Clean air unit
Pressure sensor
Flow rate sensor
Valve for air blow
Ending

Dimensions CAD

M4GB1-P7*

*** This drawing shows the T30. Refer to page 590 for detailed dimensions of the electric block.**
*** Refer to page 755 for details on mounting holes.**

● Reduced wiring left side (T10/T11/T30/T50/T51/T52/T53)
External pilot (K)

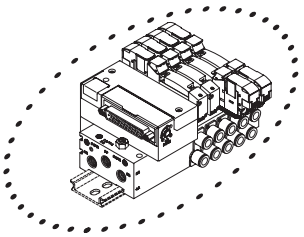

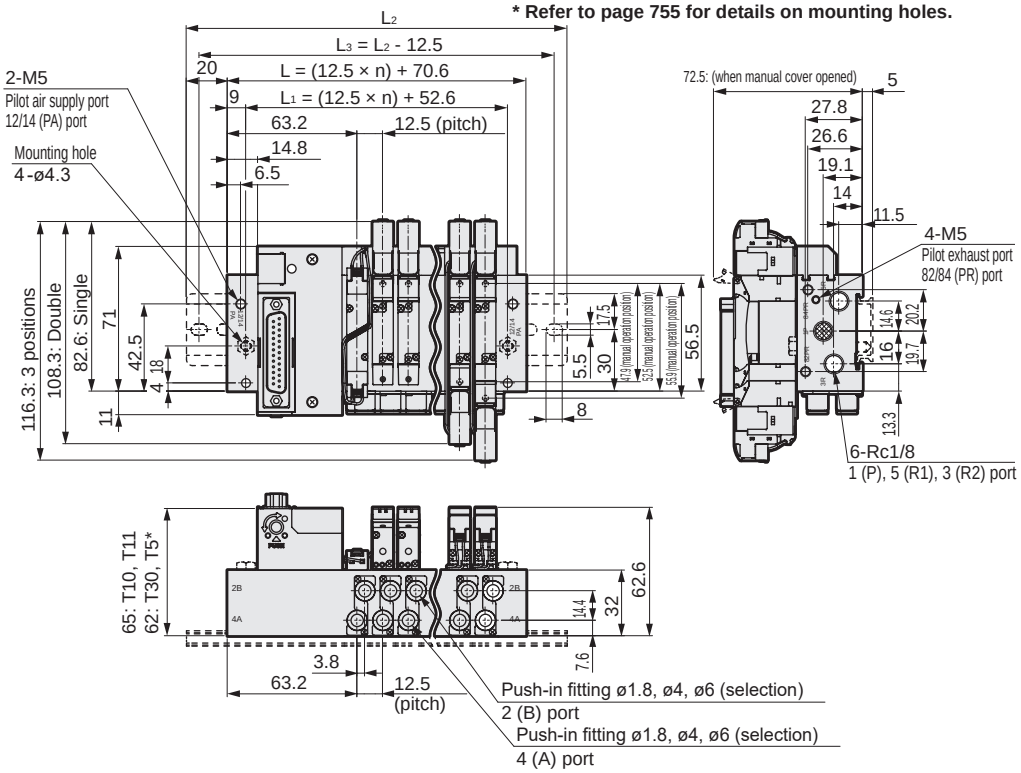

*** Refer to page 576 for details on the push-in fitting elbow (facing up/down).**

● Reduced wiring right side (T10R/T11R/T30R/T50R/T51R/T52R/T53R)
External pilot (K)

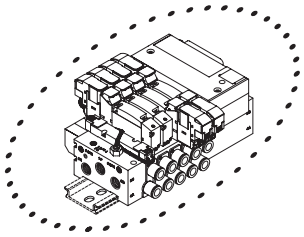

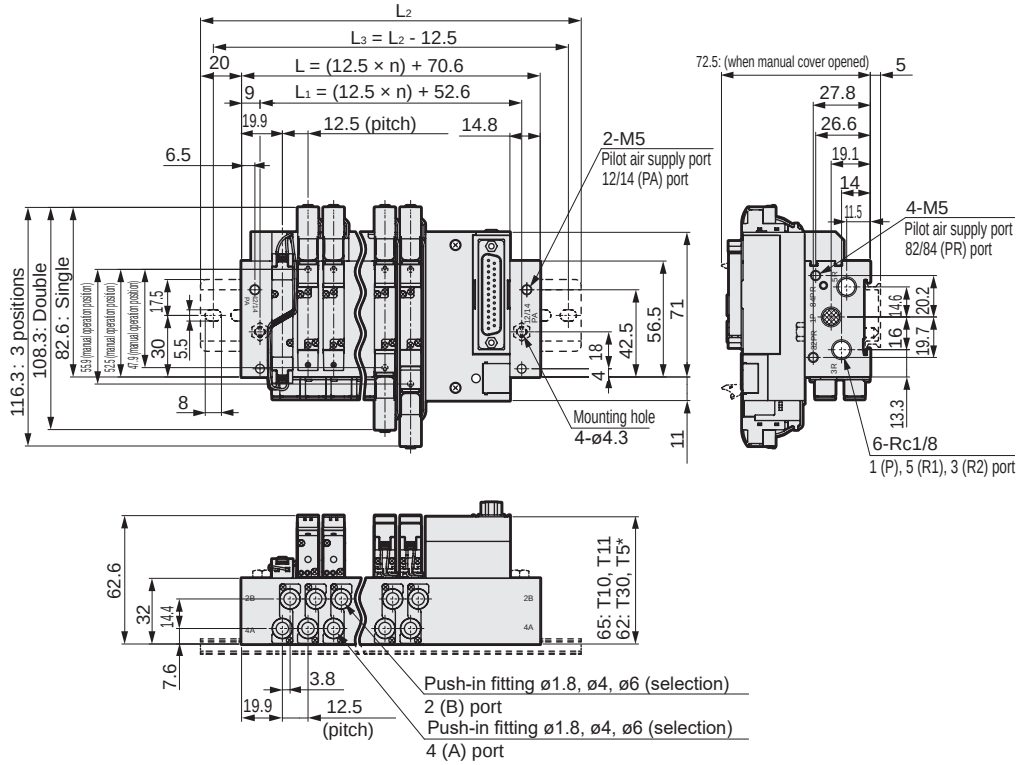

Station No.	2	3	4	5	6	7	8	9	10	11	12
L	95.6	108.1	120.6	133.1	145.6	158.1	170.6	183.1	195.6	208.1	220.6
L_1	77.6	90.1	102.6	115.1	127.6	140.1	152.6	165.1	177.6	190.1	202.6
L_2	137.5	150.0	162.5	175.0	187.5	200.0	212.5	225.0	237.5	250.0	262.5
L_3	125.0	137.5	150.0	162.5	175.0	187.5	200.0	212.5	225.0	237.5	250.0

Dimensions

M4GB1-C8-P7*

*Refer to page 755 for details on mounting holes.

● Reduced wiring left side (T10/T11/T30/T50/T51/T52/T53)
External pilot (K)

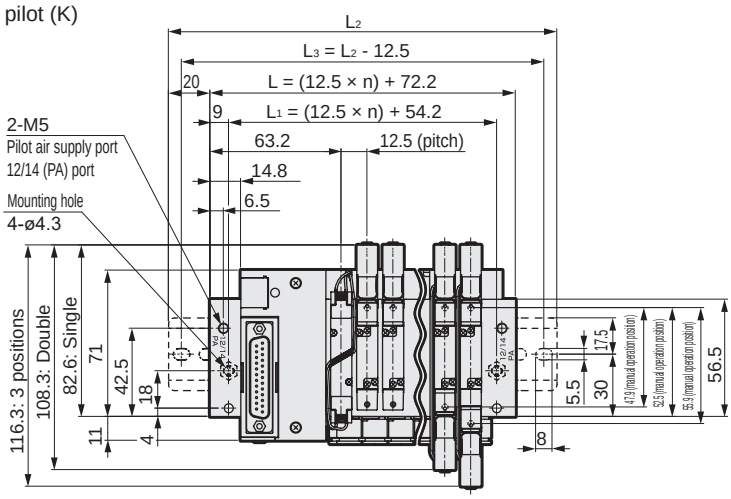

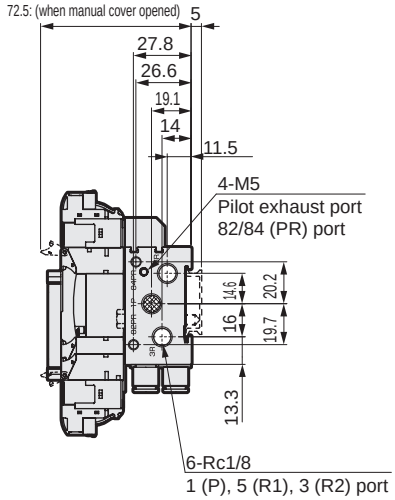

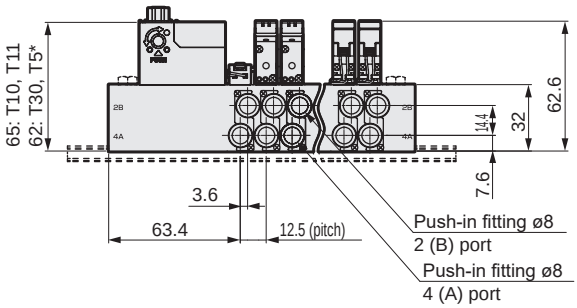

● Reduced wiring right side (T10R/T11R/T30R/T50R/T51R/T52R/T53R)
External pilot (K)

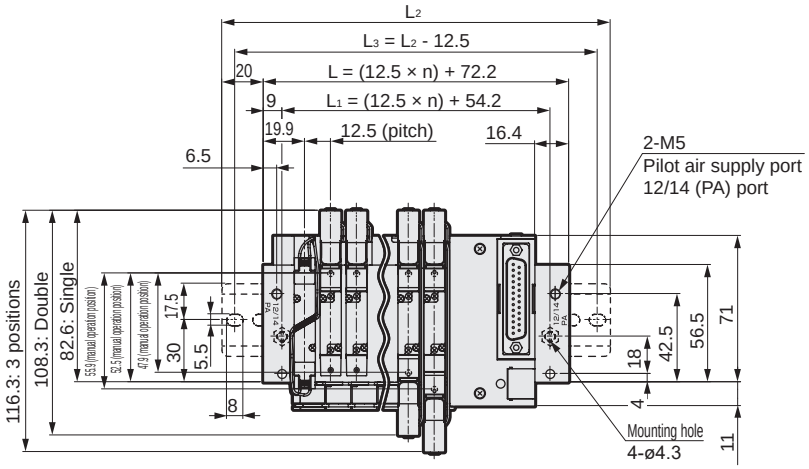

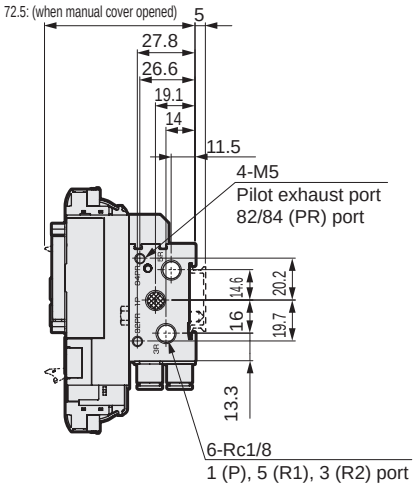

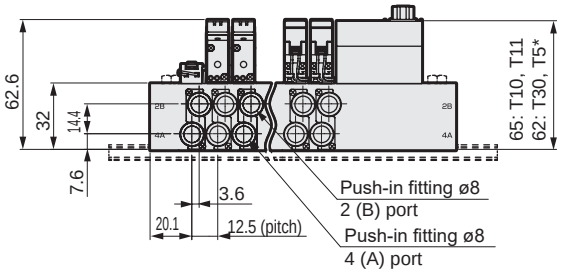

Station No.	2	3	4	5	6	7	8	9	10	11	12
L	97.2	109.7	122.2	134.7	147.2	159.7	172.2	184.7	197.2	209.7	222.2
L_1	79.2	91.7	104.2	116.7	129.2	141.7	154.2	166.7	179.2	191.7	204.2
L_2	137.5	150.0	162.5	175.0	187.5	200.0	212.5	225.0	237.5	250.0	262.5
L_3	125.0	137.5	150.0	162.5	175.0	187.5	200.0	212.5	225.0	237.5	250.0

SCPD3
SCM
SSD2
MDC2
SMG
LCM
LCR
LCG
LCX
STM
STG
STR2
MRL2
GRC
Cylinder switch
MN3E MN4E
4GA/B
M4GA/B
MN4GA/B
F.R (module unit)
Clean F.R
Precision R
Press gauge Diff. press gauge
Electro-pneumatic R
Speed controller
Auxiliary valve
Fitting/ tube
Clean air unit
Pressure sensor
Flow rate sensor
Valve for air blow
Ending

Dimensions CAD

M4GB1-P7*

● Serial transmission (T6G1)
DIN rail mounting (D)

* The dual 3-port valve integrated has the same dimensions as the double model.

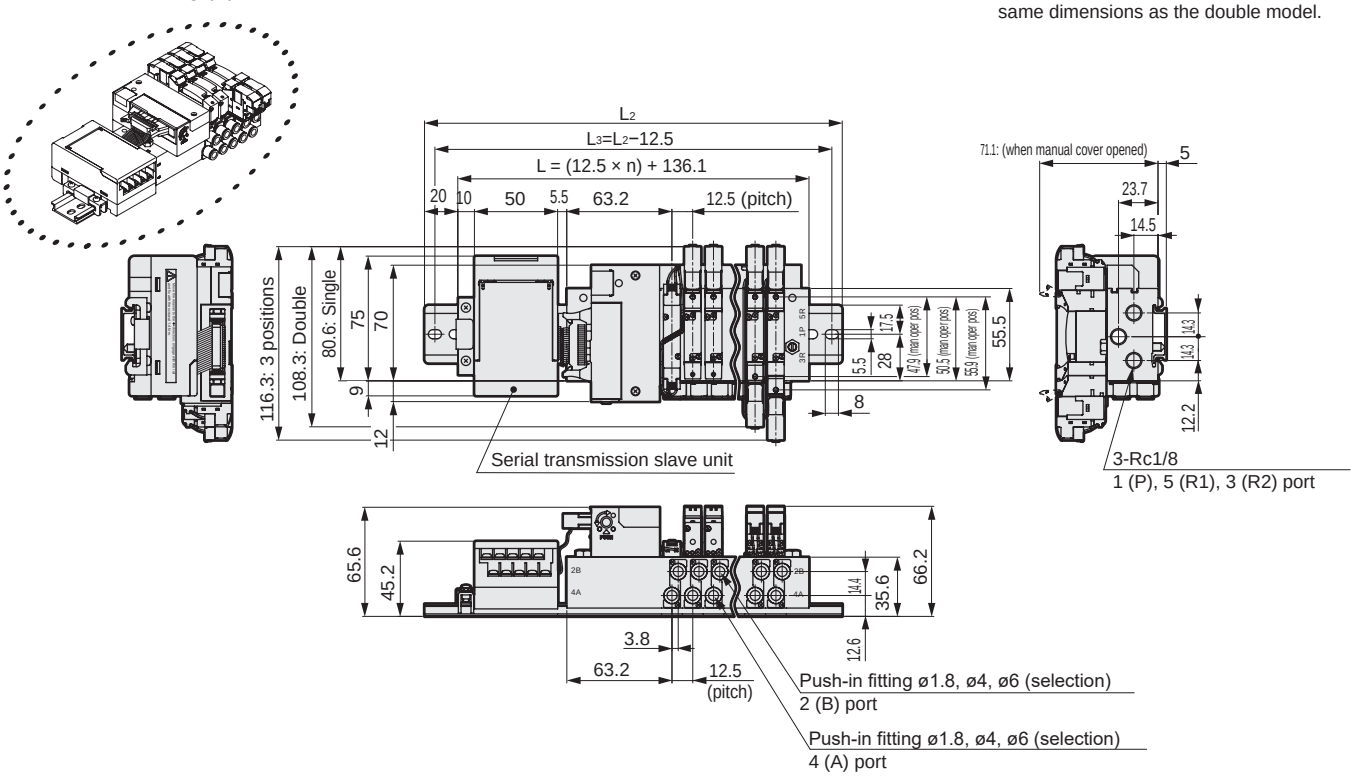

● Serial transmission (T6G1)
DIN rail mounting (D); external pilot (K)

Note: Refer to page 576 for details on the push-in fitting elbow (facing up/down).

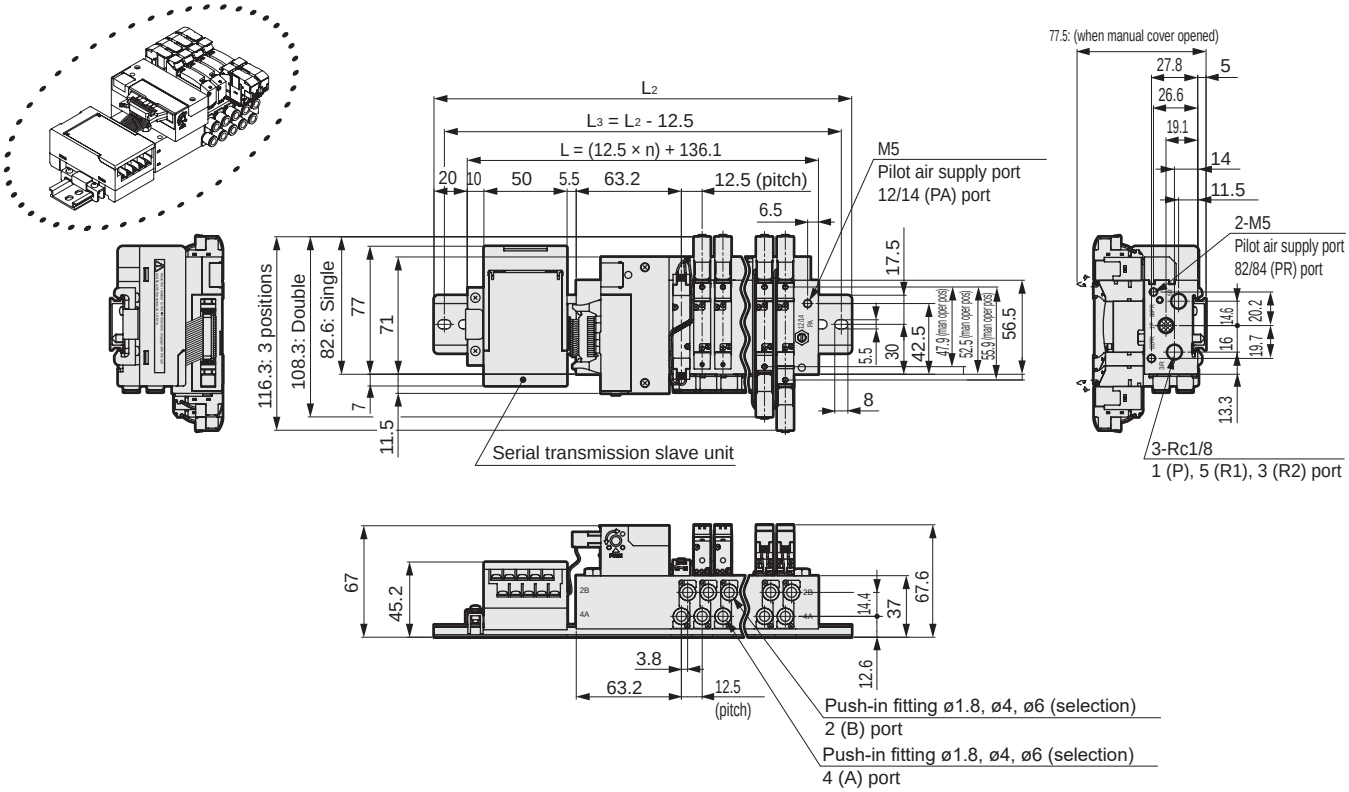

Station No.	2	3	4	5	6	7	8	9	10	11	12	13	14	15	16
L	161.1	173.6	186.1	198.6	211.1	223.6	236.1	248.6	261.1	273.6	286.1	298.6	311.1	323.6	336.1
L2	212.5	225.0	237.5	250.0	262.5	275.0	287.5	300.0	312.5	325.0	337.5	350.0	362.5	375.0	387.5
L3	200.0	212.5	225.0	237.5	250.0	262.5	275.0	287.5	300.0	312.5	325.0	337.5	350.0	362.5	375.0

Dimensions

M4GB1-C8-P7*

Note: Dedicated manifold base.

● Serial transmission (T6G1)
DIN rail mounting (D)

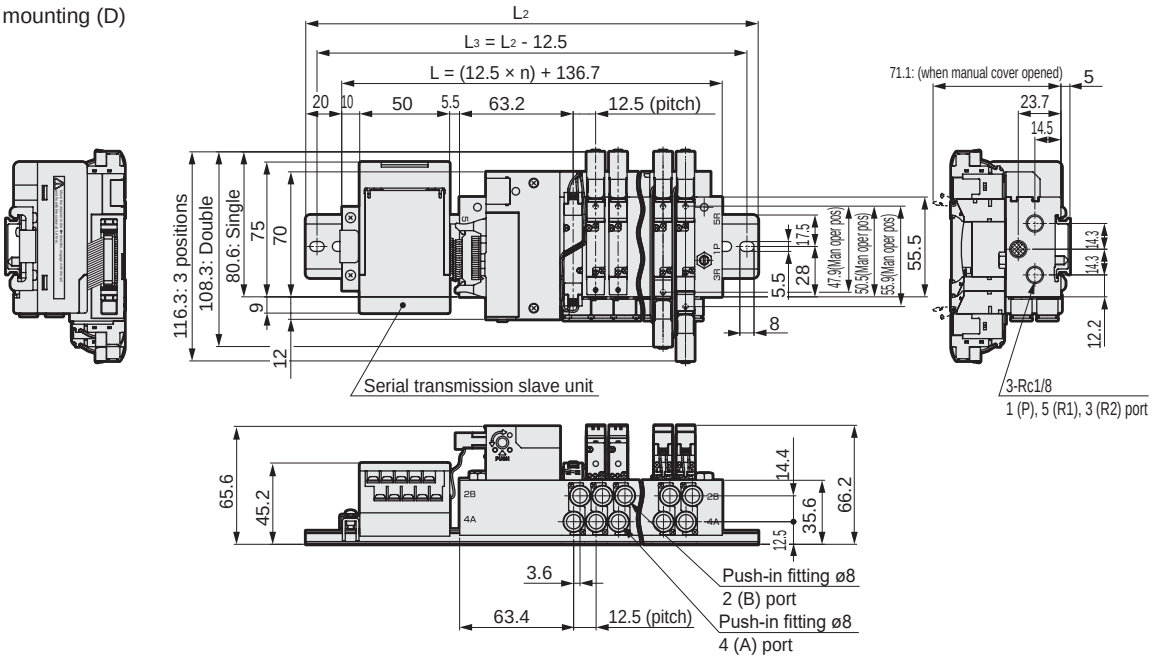

Station No.	2	3	4	5	6	7	8	9	10	11	12	13	14	15	16
L	161.7	174.2	186.7	199.2	211.7	224.2	236.7	249.2	261.7	274.2	286.7	299.2	311.7	324.2	336.7
L_2	212.5	225.0	237.5	250.0	262.5	275.0	287.5	300.0	312.5	325.0	337.5	350.0	362.5	375.0	387.5
L_3	200.0	212.5	225.0	237.5	250.0	262.5	275.0	287.5	300.0	312.5	325.0	337.5	350.0	362.5	375.0

● Serial transmission (T6G1)
DIN rail mounting (D); external pilot (K)

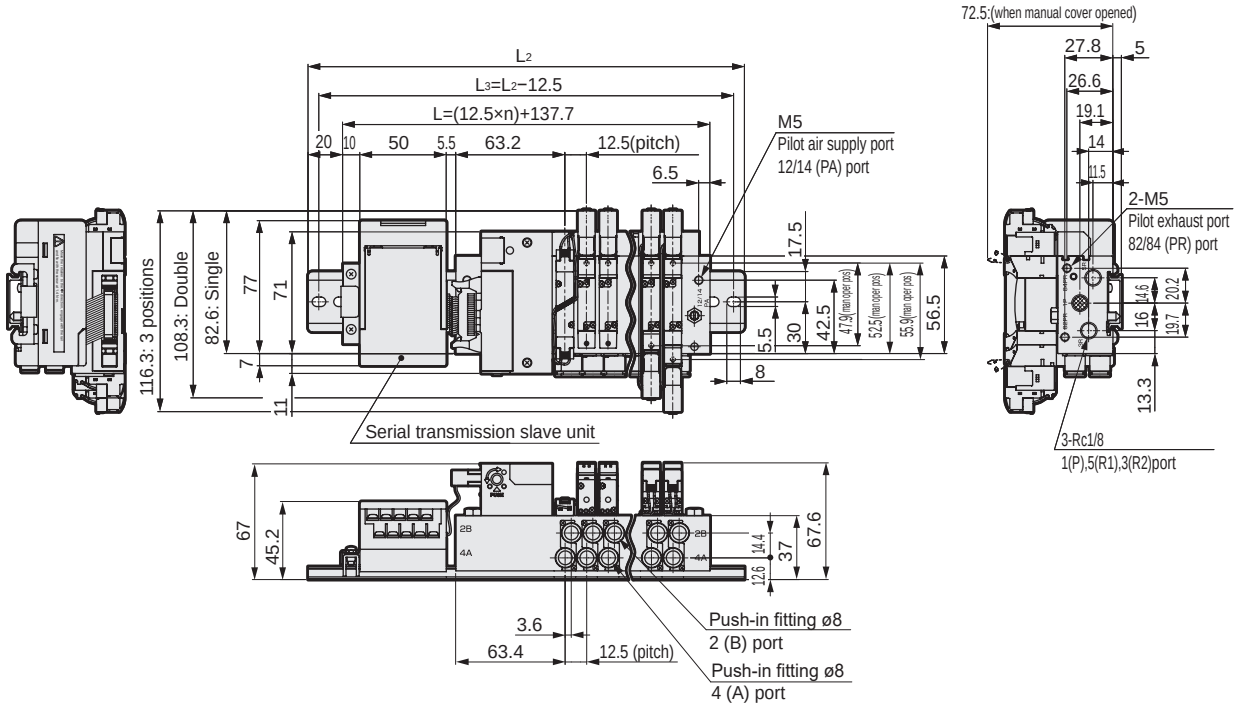

Station No.	2	3	4	5	6	7	8	9	10	11	12
L	162.8	175.3	187.8	200.3	212.8	225.3	237.8	250.3	262.8	275.3	287.8
L_2	212.5	225.0	237.5	250.0	262.5	275.0	287.5	300.0	312.5	325.0	337.5
L_3	200.0	212.5	225.0	237.5	250.0	262.5	275.0	287.5	300.0	312.5	325.0

M4GB1-T8* Series

Reduced wiring manifold; base piping; serial transmission

Dimensions CAD

M4GB1-P7*

*Refer to page 755 for details on mounting holes.

● Serial transmission (T8□)
DIN rail mounting (D)

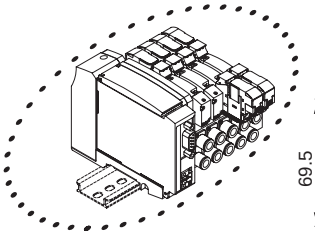

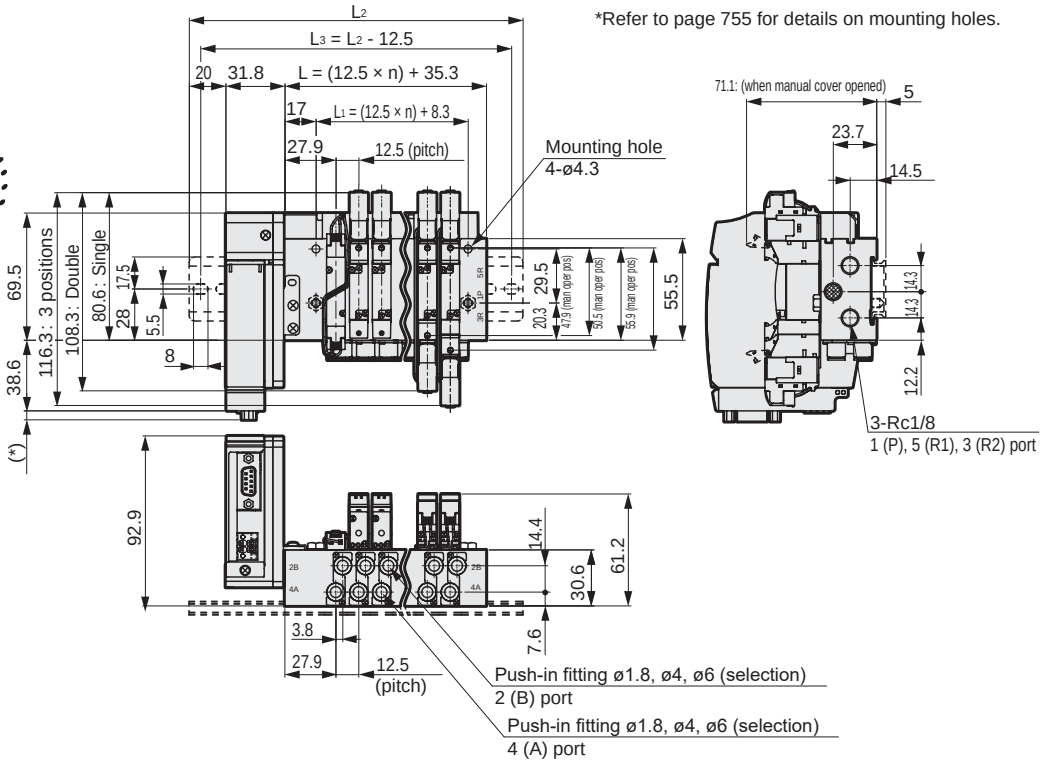

Serial transmission	(*) Dimensions
T8G□	1.0
T8P□	4.9
T8E□	1.5
T8D□	1.0
T8K□	1.0

Station No.	2	3	4	5	6	7	8	9	10	11	12	13	14	15	16	17	18	19	20
L	60.3	72.8	85.3	97.8	110.3	122.8	135.3	147.8	160.3	172.8	185.3	197.8	210.3	222.8	235.3	247.8	260.3	272.8	285.3
L_1	33.3	45.8	58.3	70.8	83.3	95.8	108.3	120.8	133.3	145.8	158.3	170.8	183.3	195.8	208.3	220.8	233.3	245.8	258.3
L_2	137.5	150.0	162.5	175.0	187.5	200.0	212.5	225.0	237.5	250.0	262.5	275.0	287.5	300.0	312.5				
L_3	125.0	137.5	150.0	162.5	175.0	187.5	200.0	212.5	225.0	237.5	250.0	262.5	275.0	287.5	300.0				

● Serial transmission (T8□)
DIN rail mounting (D); external pilot (K)

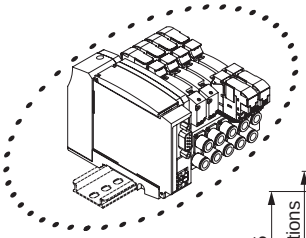

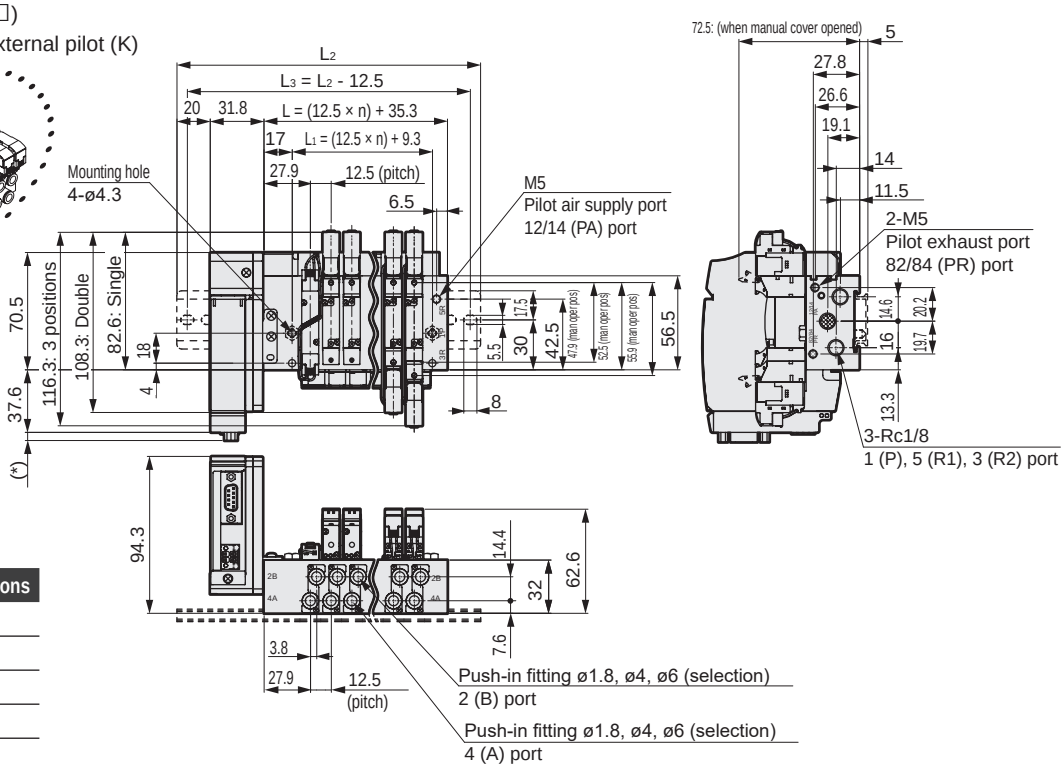

Serial transmission	(*) Dimensions
T8G□	1.0
T8P□	4.9
T8E□	1.5
T8D□	1.0
T8K□	1.0

Station No.	2	3	4	5	6	7	8	9	10	11	12
L	60.3	72.8	85.3	97.8	110.3	122.8	135.3	147.8	160.3	172.8	185.3
L_1	34.3	46.8	59.3	71.8	84.3	96.8	109.3	121.8	134.3	146.8	159.3
L_2	137.5	150.0	162.5	175.0	187.5	200.0	212.5	225.0	237.5	250.0	262.5
L_3	125.0	137.5	150.0	162.5	175.0	187.5	200.0	212.5	225.0	237.5	250.0

Dimensions

M4GB1-C8-P7*

● Reduced wiring left side (T8□)

*Refer to page 755 for details on mounting holes.

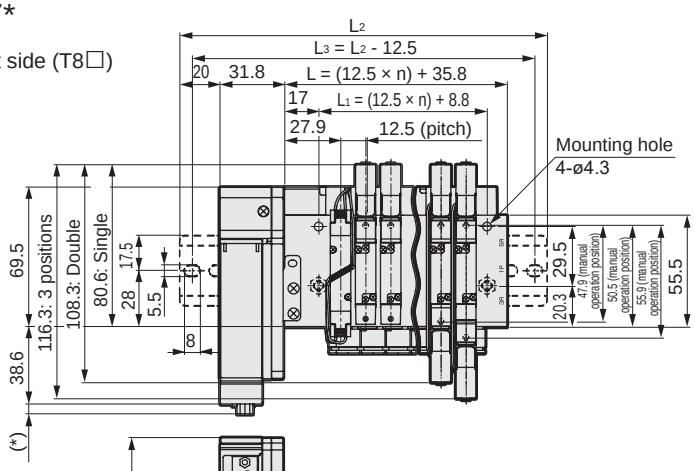

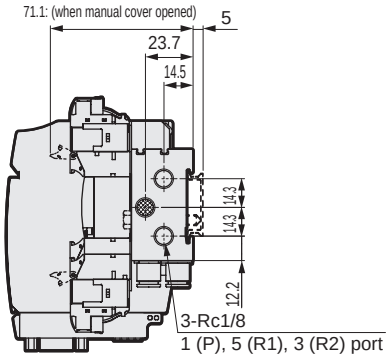

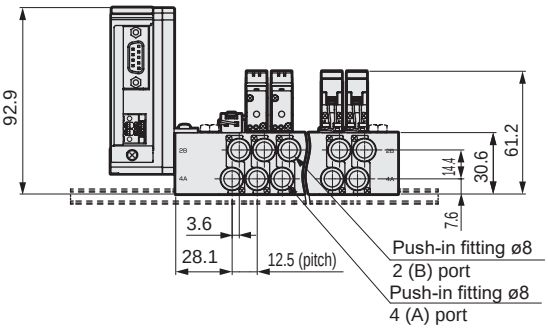

Serial transmission	(*) Dimensions
T8G□	1.0
T8P□	4.9
T8E□	1.5
T8D□	1.0
T8K□	1.0

Station No.	2	3	4	5	6	7	8	9	10	11	12	13	14	15	16	17	18	19	20
L	60.8	73.3	85.8	98.3	110.8	123.3	135.8	148.3	160.8	173.3	185.8	198.3	210.8	223.3	235.8	248.3	260.8	273.3	285.8
L_1	33.8	46.3	58.8	71.3	83.8	96.3	108.8	121.3	133.8	146.3	158.8	171.3	183.8	196.3	208.8	221.3	233.8	246.3	258.8
L_2	137.5	150.0	162.5	175.0	187.5	200.0	212.5	225.0	237.5	250.0	262.5	275.0	287.5	300.0	312.5				
L_3	125.0	137.5	150.0	162.5	175.0	187.5	200.0	212.5	225.0	237.5	250.0	262.5	275.0	287.5	300.0				

● Reduced wiring left side (T8□)
External pilot (K)

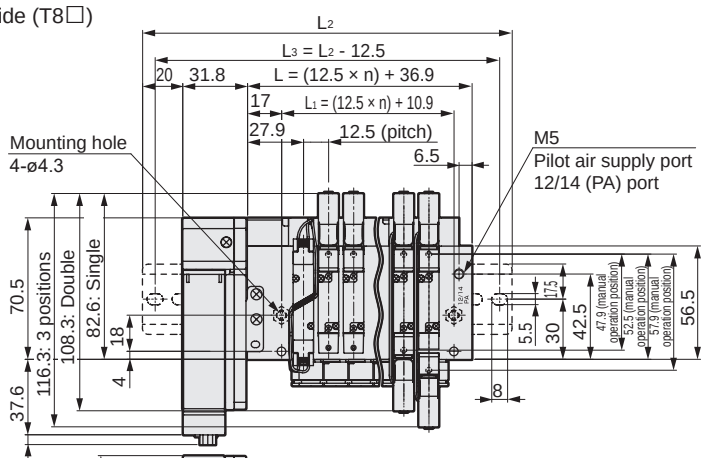

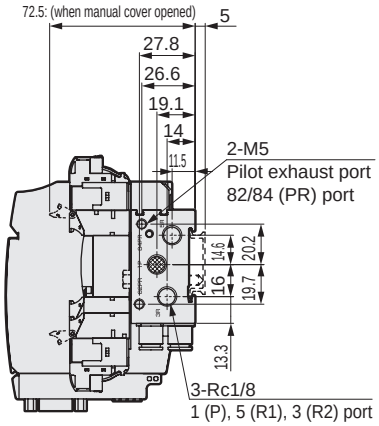

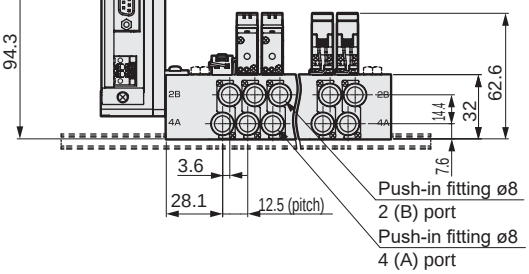

Serial transmission	(*) Dimensions
T8G□	1.0
T8P□	4.9
T8E□	1.5
T8D□	1.0
T8K□	1.0

Station No.	2	3	4	5	6	7	8	9	10	11	12
L	61.9	74.4	86.9	99.4	111.9	124.4	136.9	149.4	161.9	174.4	186.9
L_1	35.9	48.4	60.9	73.4	85.9	98.4	110.9	123.4	135.9	148.4	160.9
L_2	137.5	150.0	162.5	175.0	187.5	200.0	212.5	225.0	237.5	250.0	262.5
L_3	125.0	137.5	150.0	162.5	175.0	187.5	200.0	212.5	225.0	237.5	250.0

Dimensions

M4GB1

● Straight fitting

● ø1.8 (CF) ● ø1.8 (C18) ● ø4 (C4) ● ø6 (C6) ● ø8 (C8)

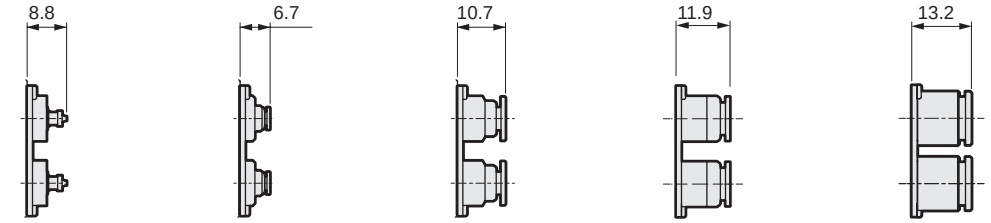

● Straight fitting, single plug

● ø1.8 (CFNC) ● ø1.8 (C18NC) ● ø4 (C4NC) ● ø6 (C6NC) ● ø8 (C8NC) ● ø1.8 (CFNO) ● ø1.8 (C18NO) ● ø4 (C4NO) ● ø6 (C6NO) ● ø8 (C8NO)

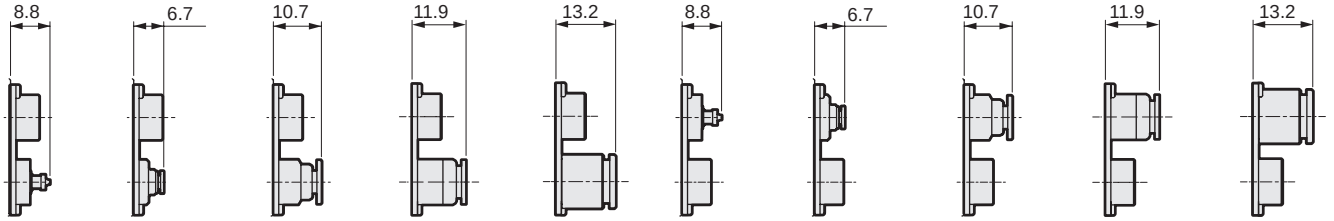

● Radial fitting (facing up)

● ø1.8 (CL18) ● ø4 (CL4) ● ø6 (CL6)

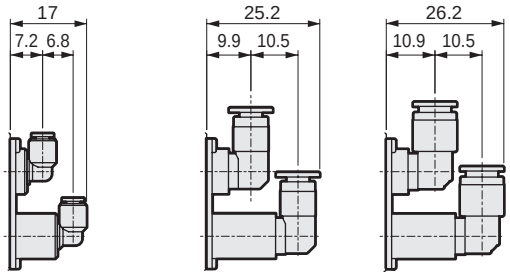

● Radial fitting (facing down)

● ø1.8 (CD18) ● ø4 (CD4) ● ø6 (CD6)

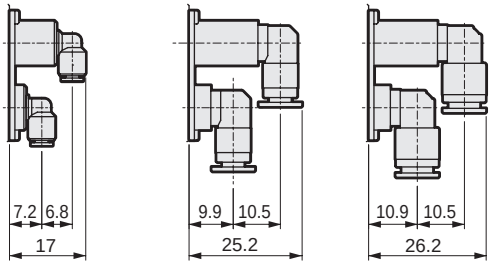

● Radial fitting (facing up), single plug

● ø1.8 (CL18NC) ● ø4 (CL4NC) ● ø6 (CL6NC) ● ø1.8 (CL18NO) ● ø4 (CL4NO) ● ø6 (CL6NO)

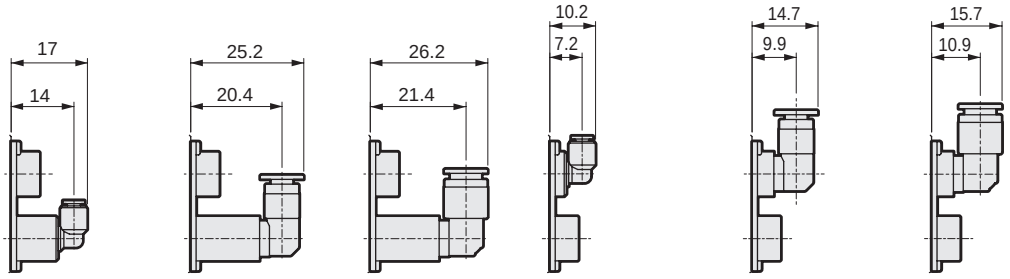

● Radial push-in fitting (facing down), single plug

● ø1.8 (CD18NC) ● ø4 (CD4NC) ● ø6 (CD6NC) ● ø1.8 (CD18NO) ● ø4 (CD4NO) ● ø6 (CD6NO)

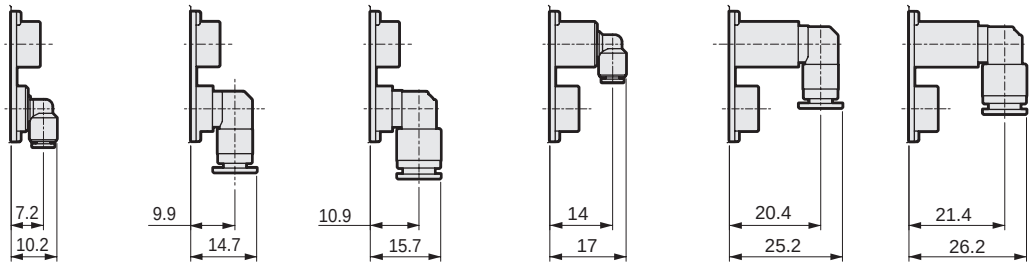

Dimensions

● Fitting straight

● ø1/8 inch(C3N)

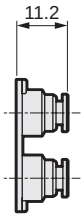

● ø5/32 inch(C4N)

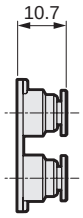

● Straight fitting, single plug

● ø1/8 inch(C3NCN)

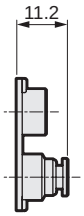

● ø5/32 inch(C4NCN)

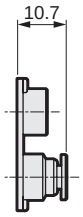

● ø1/8 inch(C3NON)

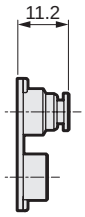

● ø5/32 inch(C4NON)

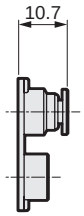

● L fitting (upward)

● ø1/8 inch(CL3N)

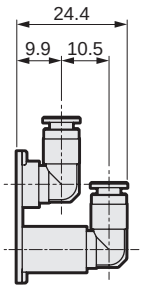

● ø5/32 inch(CL4N)

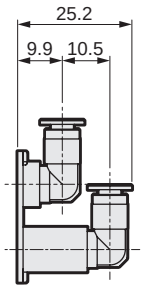

● ø1/8 inch(CD3N)

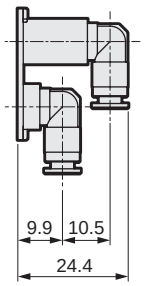

● ø5/32 inch(CD4N)

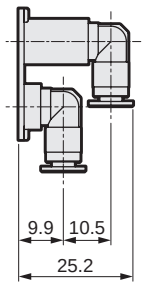

● L fitting (upward), single plug

● ø1/8 inch(CL3NCN)

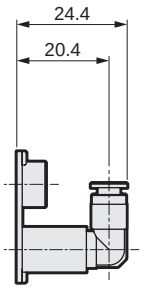

● ø5/32 inch(CL4NCN)

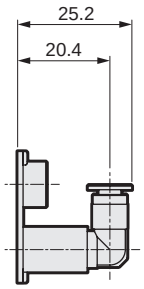

● ø1/8 inch(CL3NON)

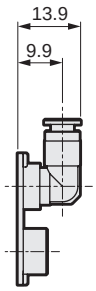

● ø5/32 inch(CL4NON)

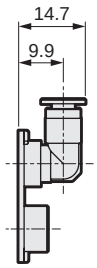

● Radial push-in fitting (downward), single plug

● ø1/8 inch(CD3NCN)

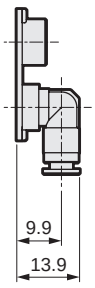

● ø5/32 inch(CD4NCN)

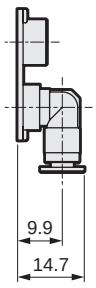

● ø1/8 inch(CD3NON)

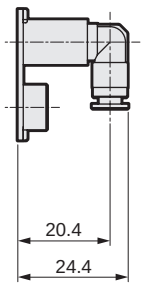

● ø5/32 inch(CD4NON)

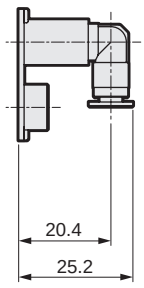

M4GB2-T* Series

Reduced wiring manifold; base piping

Dimensions CAD

M4GB2-P7*

***1 This drawing shows the T10. Refer to page 590 for detailed dimensions of the electric block.**

*2 The dimension of the dual 3-port valve integrated is the same as that of the double type.

*Refer to page 754 for details on mounting holes.

● Reduced wiring left side (T10/T11/T30/T50/T51/T52/T53)

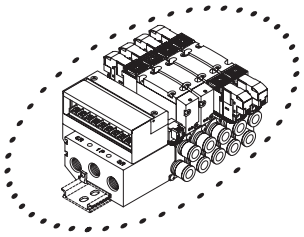

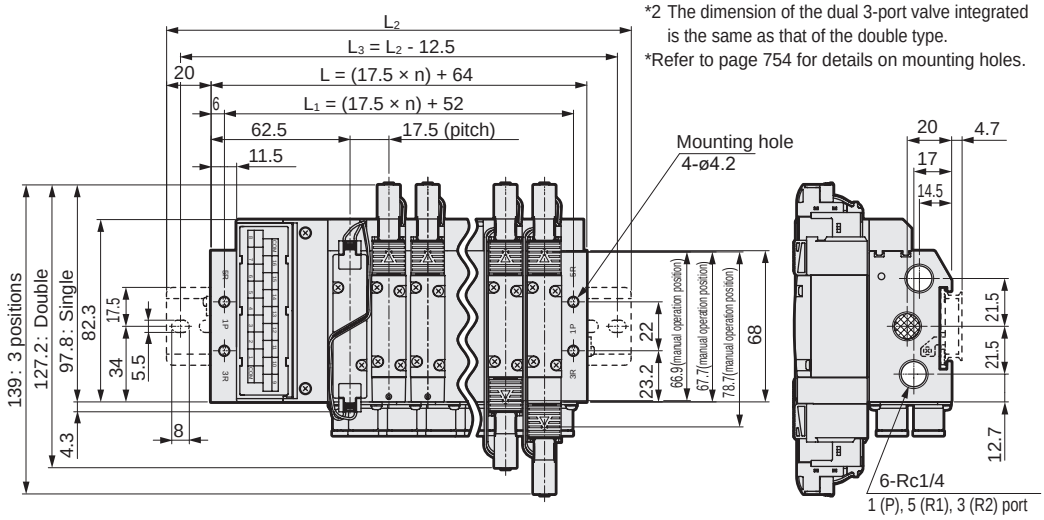

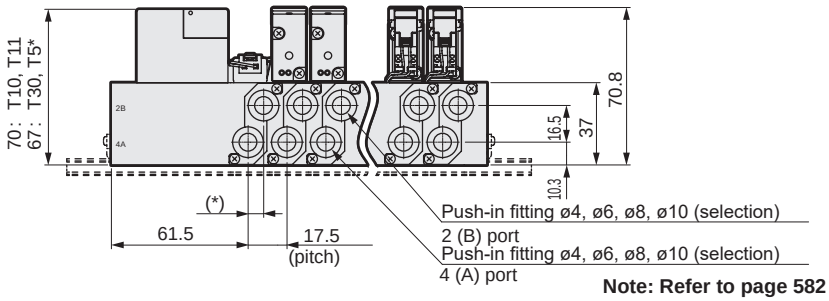

A/B port size	* Dimensions
ø4, ø6, ø8	7
ø10	8.1

Note: Refer to page 582 for details on the push-in fitting elbow (facing up/down).

● Reduced wiring right side (T10R/T11R/T30R/T50R/T51R/T52R/T53R)

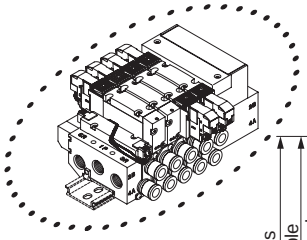

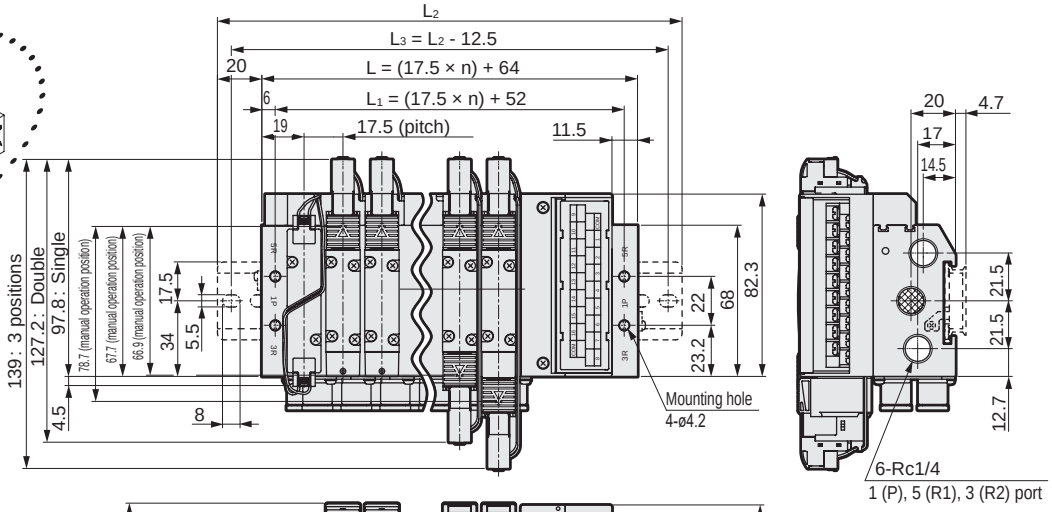

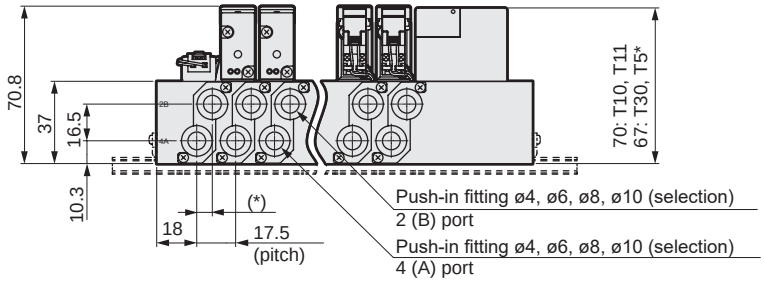

A/B port size	* Dimensions
ø4, ø6, ø8	7
ø10	8.1

Station No.	2	3	4	5	6	7	8	9	10	11	12	13	14	15	16	17	18	19	20
L	99.0	116.5	134.0	151.5	169.0	186.5	204.0	221.5	239.0	256.5	274.0	291.5	309.0	326.5	344.0	361.5	379.0	396.5	414.0
L_1	87.0	104.5	122.0	139.5	157.0	174.5	192.0	209.5	227.0	244.5	262.0	279.5	297.0	314.5	332.0	349.5	367.0	384.5	402.0
L_2	150.0	162.5	175.0	200.0	212.5	237.5	250.0	262.5	287.5	300.0	325.0	337.5	350.0	375.0	387.5				
L_3	137.5	150.0	162.5	187.5	200.0	225.0	237.0	250.0	275.0	287.5	312.5	325.0	337.5	362.5	375.0				

Dimensions

M4GB2-P7*

*** This drawing shows the T30. Refer to page 590 for detailed dimensions of the electric block.**
*** Refer to page 754 for details on mounting holes.**

● Reduced wiring left side (T10/T11/T30/T50/T51/T52/T53)
External pilot (K)

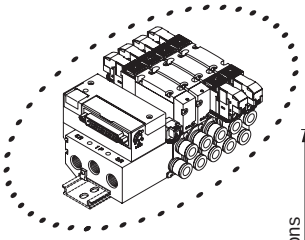

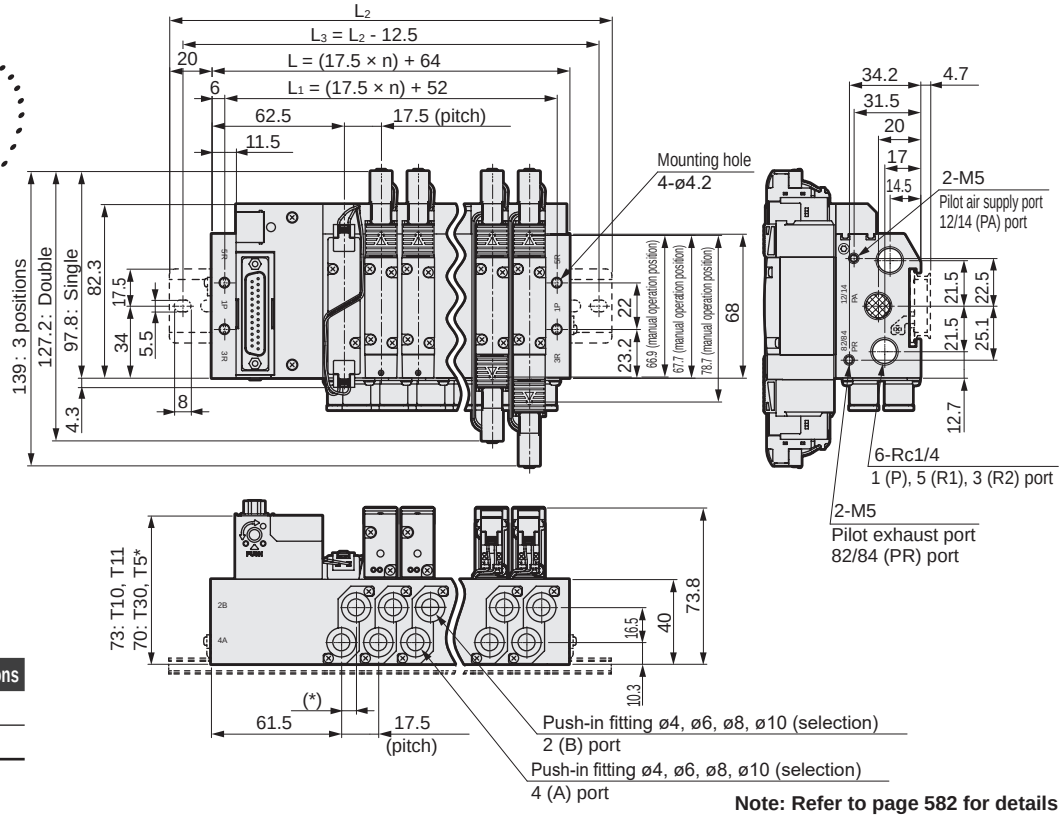

A/B port size	* Dimensions
ø4, ø6, ø8	7
ø10	8.1

Note: Refer to page 582 for details on the push-in fitting elbow (facing up/down).

● Reduced wiring right side (T10R/T11R/T30R/T50R/T51R/T52R/T53R)
External pilot (K)

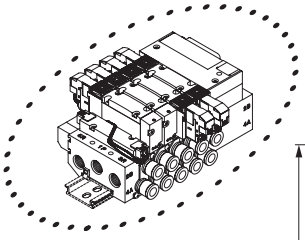

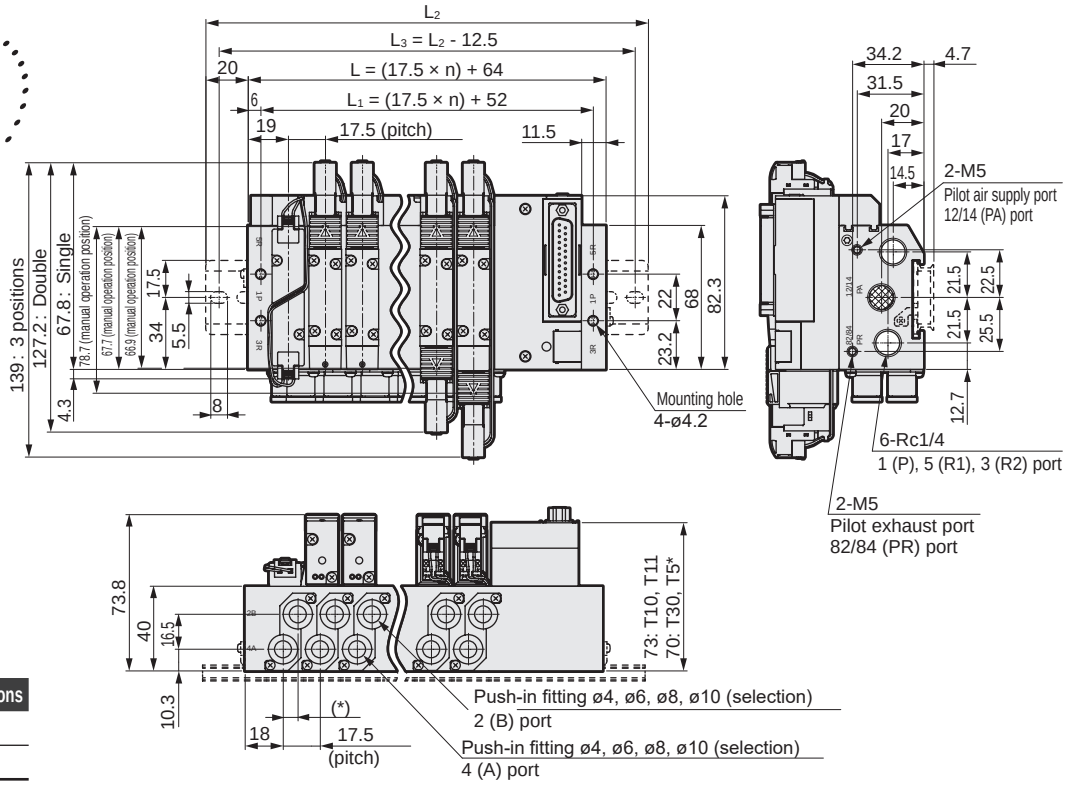

A/B port size	* Dimensions
ø4, ø6, ø8	7
ø10	8.1

Station No.	2	3	4	5	6	7	8	9	10	11	12	13	14	15	16	17	18	19	20
L	99.0	116.5	134.0	151.5	169.0	186.5	204.0	221.5	239.0	256.5	274.0	291.5	309.0	326.5	344.0	361.5	379.0	396.5	414.0
L_1	87.0	104.5	122.0	139.5	157.0	174.5	192.0	209.5	227.0	244.5	262.0	279.5	297.0	314.5	332.0	349.5	367.0	384.5	402.0
L_2	150.0	162.5	175.0	200.0	212.5	237.5	250.0	262.5	287.5	300.0	325.0	337.5	350.0	375.0	387.5				
L_3	137.5	150.0	162.5	187.5	200.0	225.0	237.5	250.0	275.0	287.5	312.5	325.0	337.5	362.5	375.0				

SCPD3
SCM
SSD2
MDC2
SMG
LCM
LCR
LCG
LCX
STM
STG
STR2
MRL2
GRC
Cylinder switch
MN3E MN4E
4GA/B
M4GA/B
MN4GA/B
F.R (module unit)
Clean F.R
Precision R
Press gauge Diff. press gauge
Electro-pneumatic R
Speed controller
Auxiliary valve
Fitting/ tube
Clean air unit
Pressure sensor
Flow rate sensor
Valve for air blow
Ending

Dimensions CAD

M4GB2-P7*

● Serial transmission (T6G1)
DIN rail mounting (D)

*The dimension of the dual 3-port valve integrated is the same as that of the double type.

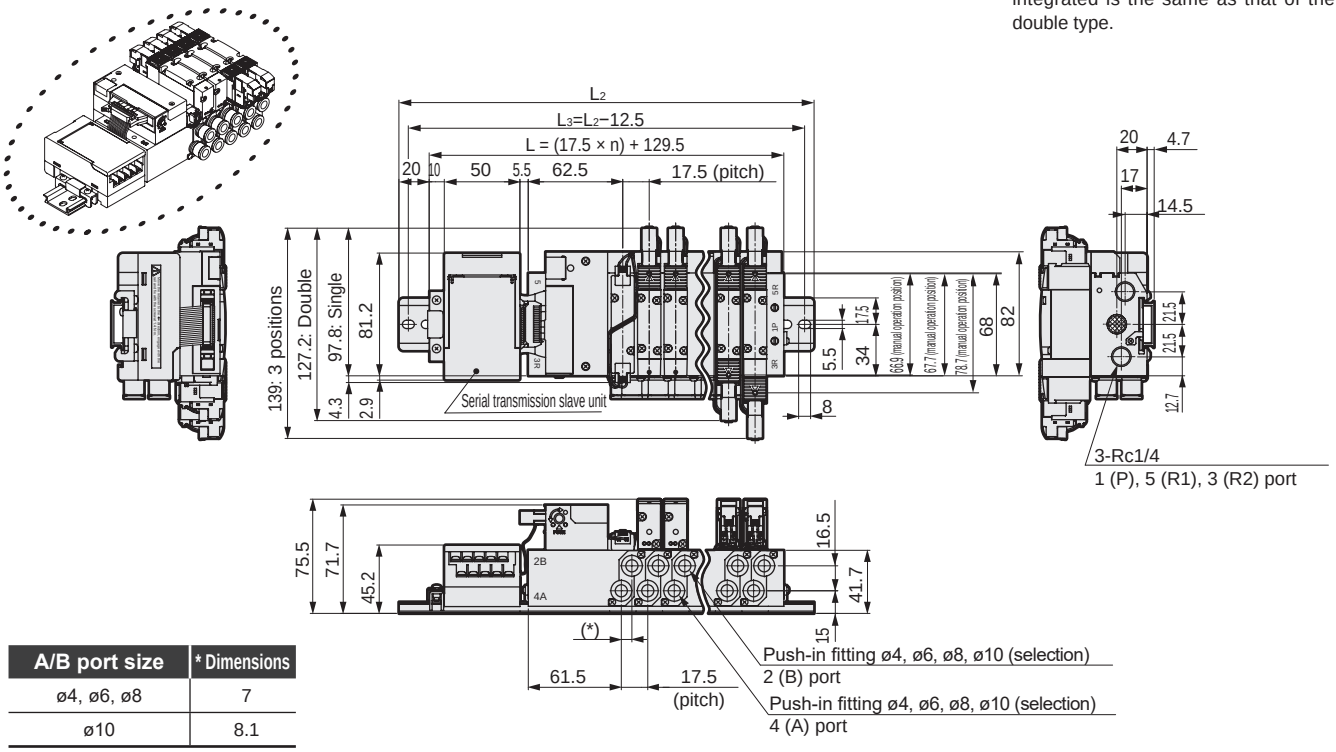

A/B port size	* Dimensions
ø4, ø6, ø8	7
ø10	8.1

Note: Refer to page 582 for details on the push-in fitting elbow (facing up/down).

● Serial transmission (T6G1)
DIN rail mounting (D); external pilot (K)

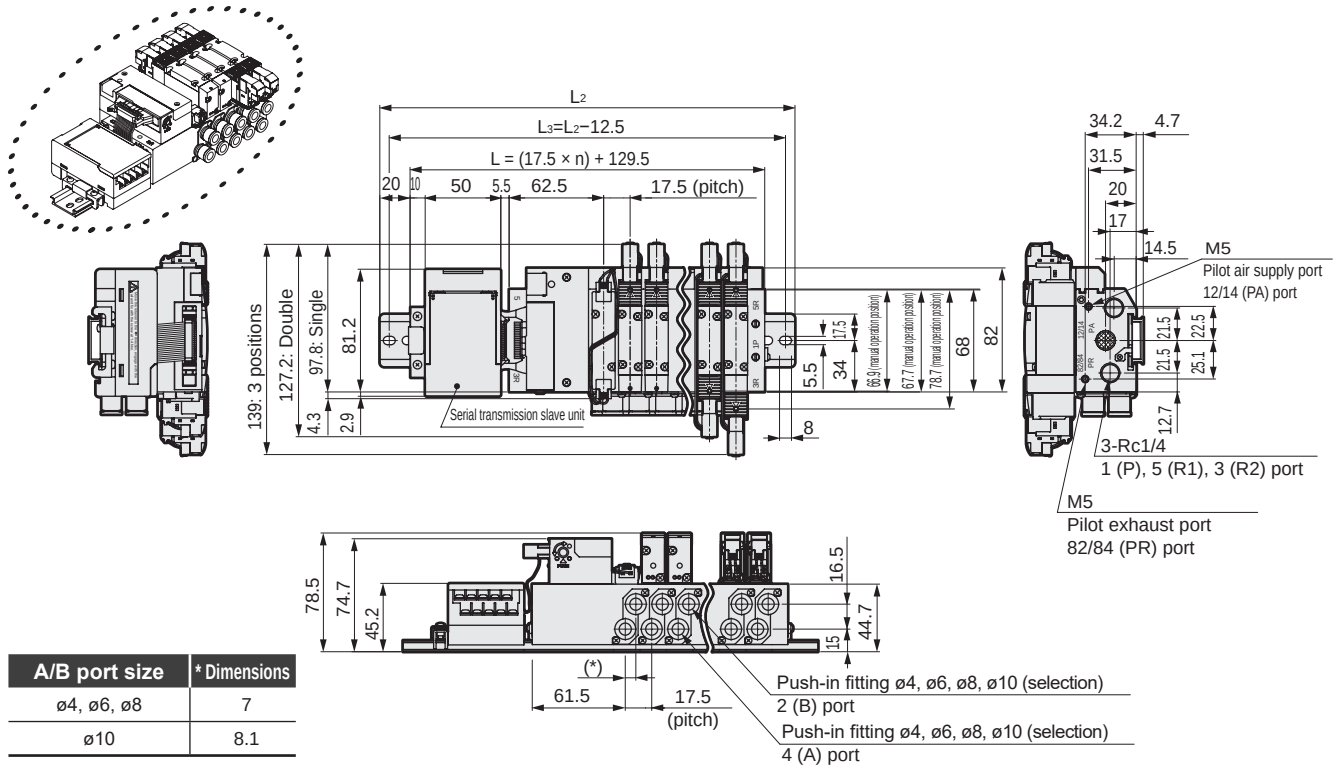

A/B port size	* Dimensions
ø4, ø6, ø8	7
ø10	8.1

Station No.	2	3	4	5	6	7	8	9	10	11	12	13	14	15	16
L	164.5	182.0	199.5	217.0	234.5	252.0	269.5	287.0	304.5	322.0	339.5	357.0	374.5	392.0	409.5
L2	212.5	225.0	250.0	262.5	275.0	300.0	312.5	337.5	350.0	362.5	387.5	400.0	425.0	437.5	450.0
L3	200.0	212.5	237.5	250.0	262.5	287.5	300.0	325.0	337.5	350.0	375.0	387.5	412.5	425.0	437.5

Dimensions

M4GB2-P7*

● Serial transmission (T8□)
DIN rail mounting (D)

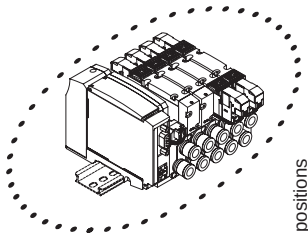

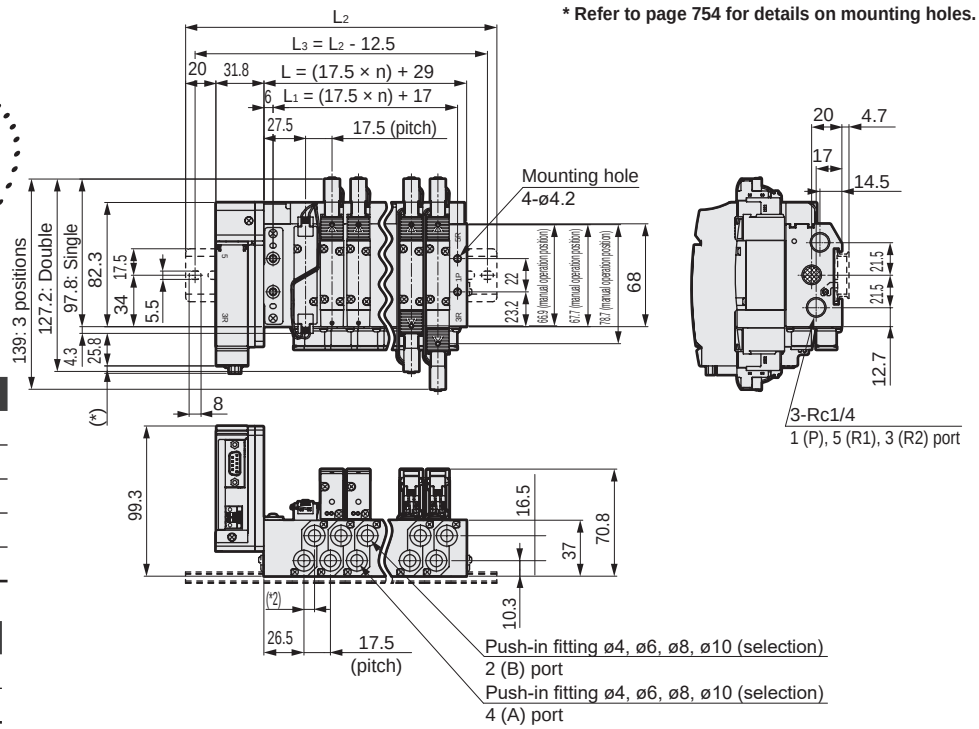

Serial transmission	(*) Dimensions
T8G□	1.0
T8P□	4.9
T8E□	1.5
T8D□	1.0
T8K□	1.0

*2

A/B port size	*2 Dimensions
ø4, ø6, ø8	7
ø10	8.1

Station No.	2	3	4	5	6	7	8	9	10	11	12	13	14	15	16	17	18	19	20
L	64.0	81.5	99.0	116.5	134.0	151.5	169.0	186.5	204.0	221.5	239.0	256.5	274.0	291.5	309.0	326.5	344.0	361.5	379.0
L_1	52.0	69.5	87.0	104.5	122.0	139.5	157.0	174.5	192.0	209.5	227.0	244.5	262.0	279.5	297.0	314.5	332.0	349.5	367.0
L_2	137.5	162.5	175.0	200.0	212.5	225.0	250.0	262.5	287.5	300.0	312.5	337.5	350.0	375.0	387.5				
L_3	125.0	150.0	162.5	187.5	200.0	212.5	237.5	250.0	275.0	287.5	300.0	325.0	337.5	362.5	375.0				

● Serial transmission (T8□)
DIN rail mounting (D); external pilot (K)

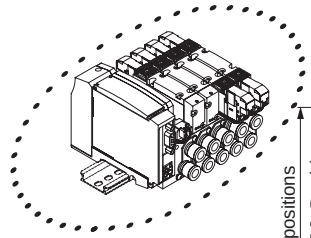

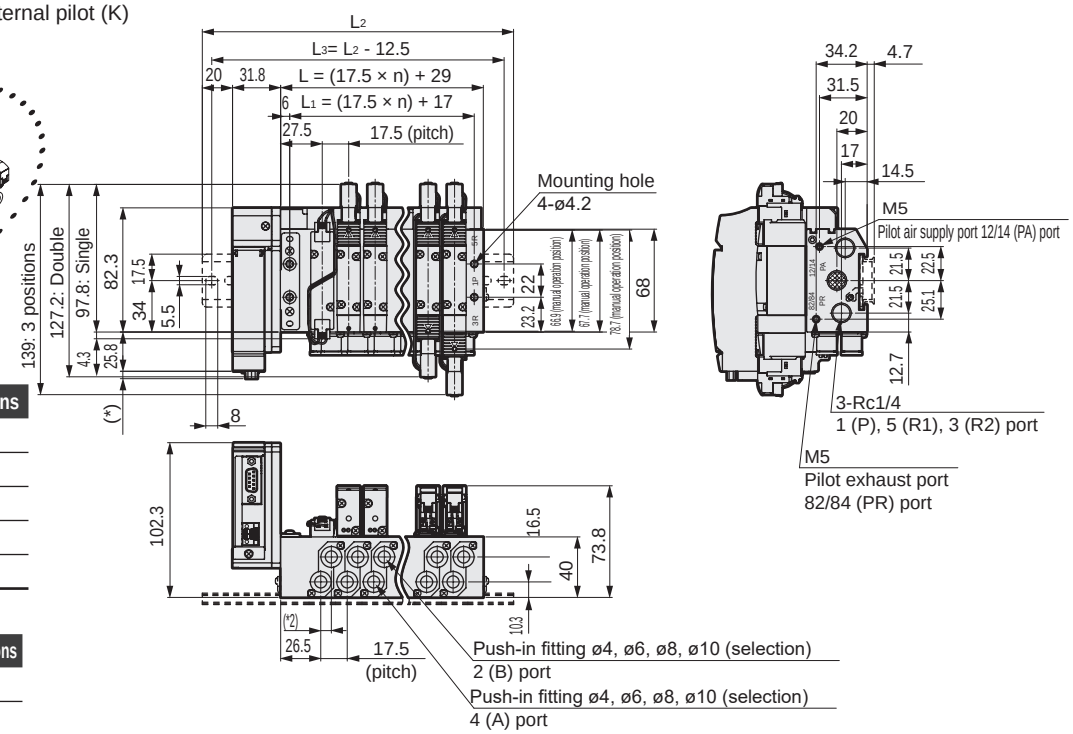

Serial transmission	(*) Dimensions
T8G□	1.0
T8P□	4.9
T8E□	1.5
T8D□	1.0
T8K□	1.0

*2

A/B port size	*2 Dimensions
ø4, ø6, ø8	7
ø10	8.1

Station No.	2	3	4	5	6	7	8	9	10	11	12	13	14	15	16	17	18	19	20
L	64.0	81.5	99.0	116.5	134.0	151.5	169.0	186.5	204.0	221.5	239.0	256.5	274.0	291.5	309.0	326.5	344.0	361.5	379.0
L_1	52.0	69.5	87.0	104.5	122.0	139.5	157.0	174.5	192.0	209.5	227.0	244.5	262.0	279.5	297.0	314.5	332.0	349.5	367.0
L_2	137.5	162.5	175.0	200.0	212.5	225.0	250.0	262.5	287.5	300.0	312.5	337.5	350.0	375.0	387.5				
L_3	125.0	150.0	162.5	187.5	200.0	212.5	237.5	250.0	275.0	287.5	300.0	325.0	337.5	362.5	375.0				

Dimensions

M4GB2

● Straight fitting
● ø4 (C4) ● ø6 (C6) ● ø8 (C8) ● ø10 (C10)

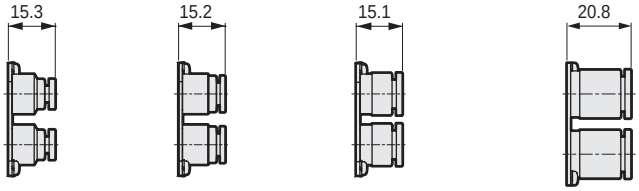

● Straight fitting, single plug
● ø4 (C4NC) ● ø6 (C6NC) ● ø8 (C8NC) ● ø10 (C10NC) ● ø4 (C4NO) ● ø6 (C6NO) ● ø8 (C8NO) ● ø10 (C10NO)

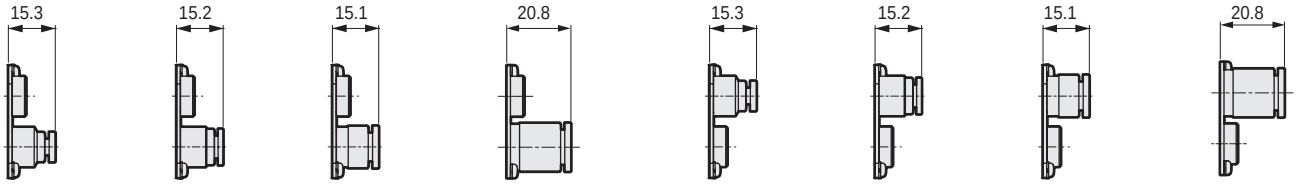

● Radial fitting (facing up)
● ø6 (L6) ● ø8 (CL8)

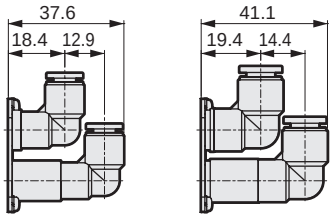

● Radial fitting (facing down)
● ø6 (CD6) ● ø8 (CD8)

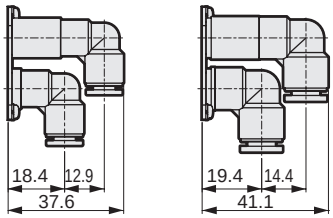

● Radial fitting (facing up), single plug
● ø6 (CL6NC) ● ø8 (CL8NC) ● ø6 (CL6NO) ● ø8 (CL8NO)

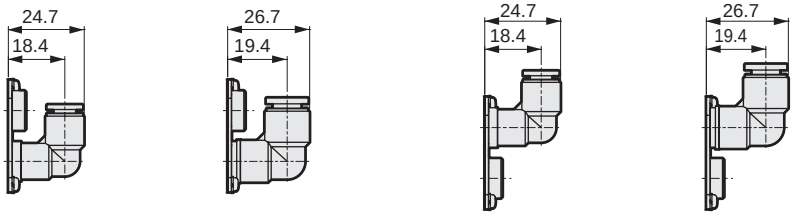

● Radial fitting (facing down), single plug
● ø6 (CD6NC) ● ø8 (CD8NC) ● ø6 (CD6NO) ● ø8 (CD8NO)

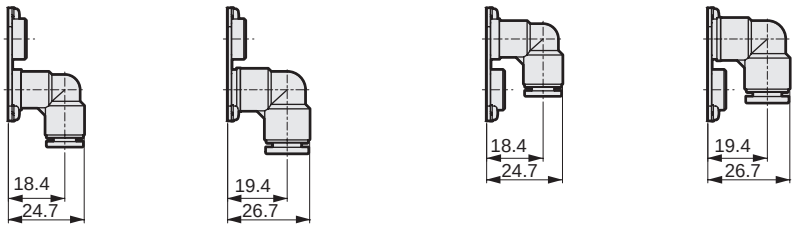

Dimensions

● Fitting straight

● ø1/4" (C6N)

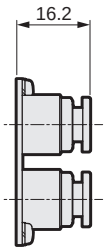

● ø5/16" (C8N)

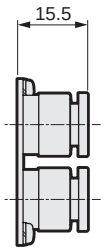

● Straight fitting, single plug

● ø1/4 inch (C6NCN)

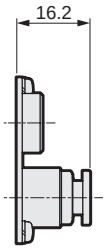

● ø5/16 inch (C8NCN)

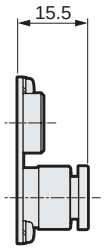

● ø1/4" (C6NON)

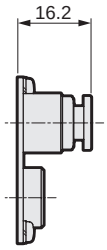

● ø5/16" (C8NON)

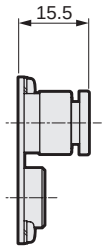

● L fitting (upward)

● ø1/4 inch (CL6N)

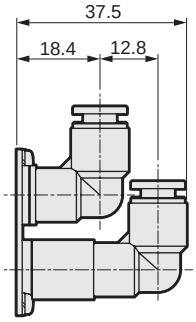

● ø5/16 inch (CL8N)

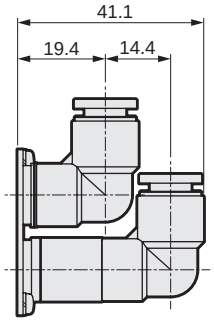

● ø1/8 inch (CD6N)

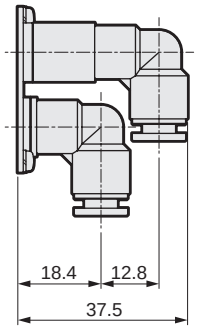

● ø5/32 inch (CD8N)

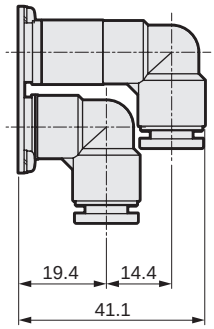

● L fitting (upward), single plug

● ø1/4 inch (CL6NCN)

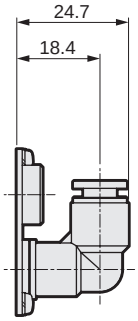

● ø5/16 inch (CL8NCN)

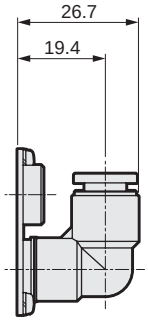

● ø1/4" (CL6NON)

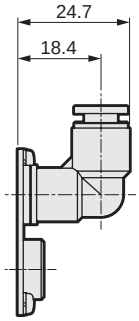

● ø5/16" (CL8NON)

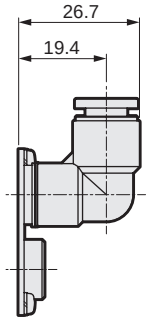

● L fitting (downward), single plug

● ø1/4 inch (CD6NCN)

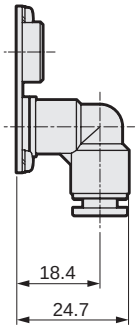

● ø5/16 inch (CD8NCN)

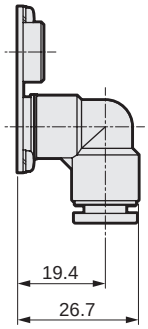

● ø1/4" (CD6NON)

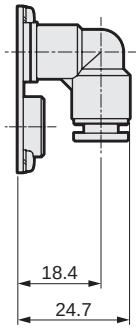

● ø5/16" (CD8NON)

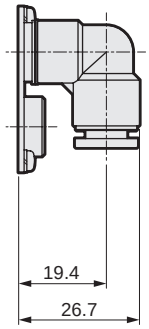

SCPD3
SCM
SSD2
MDC2
SMG
LCM
LCR
LCG
LCX
STM
STG
STR2
MRL2
GRC
Cylinder switch
MN3E MN4E
4GA/B
M4GA/B
MN4GA/B
F.R (module unit)
Clean F.R
Precision R
Press gauge Diff. press gauge
Electro-pneumatic R
Speed controller
Auxiliary valve
Fitting/ tube
Clean air unit
Pressure sensor
Flow rate sensor
Valve for air blow
Ending

Dimensions CAD

M4GB3-P7*

*** This drawing shows the T10. Refer to page 590 for detailed dimensions of the electric block.**
*** Refer to page 754 for details on mounting holes.**

● Reduced wiring left side (T10/T11/T30/T50/T51/T52/T53)

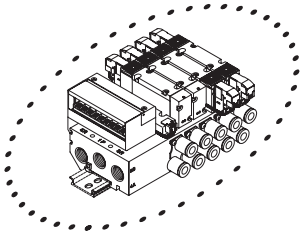

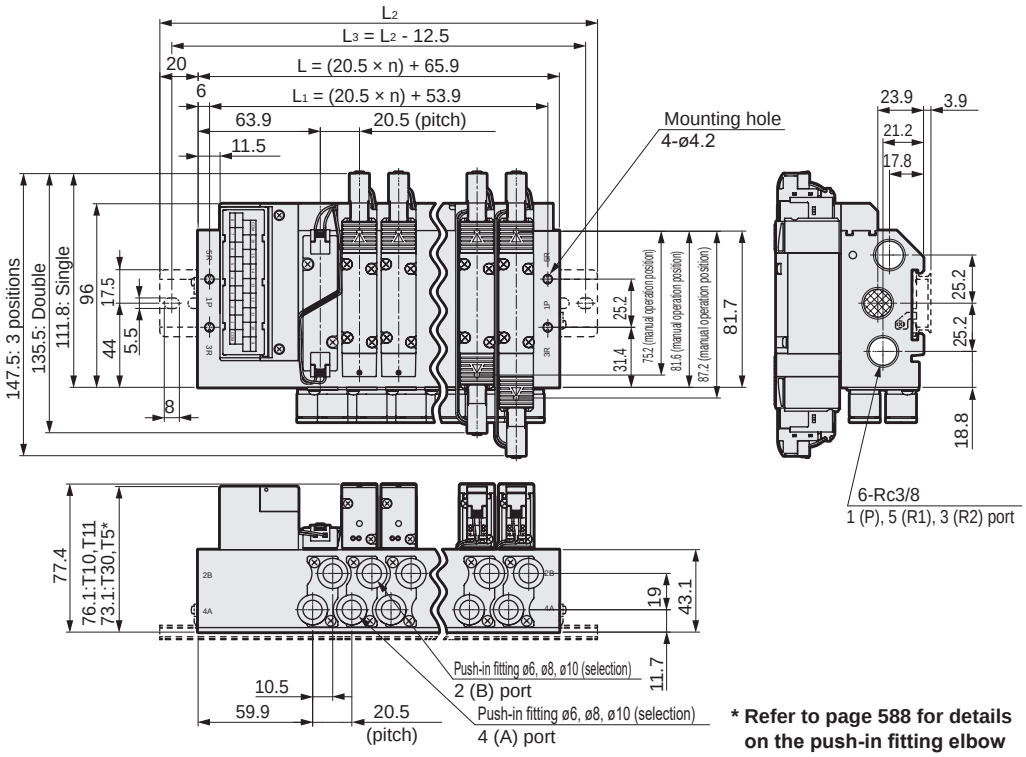

*** Refer to page 588 for details on the push-in fitting elbow (facing up/down).**

● Reduced wiring right side (T10R/T11R/T30R/T50R/T51R/T52R/T53R)

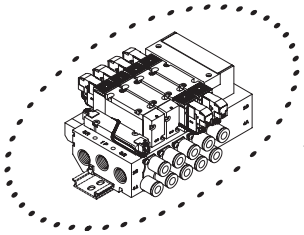

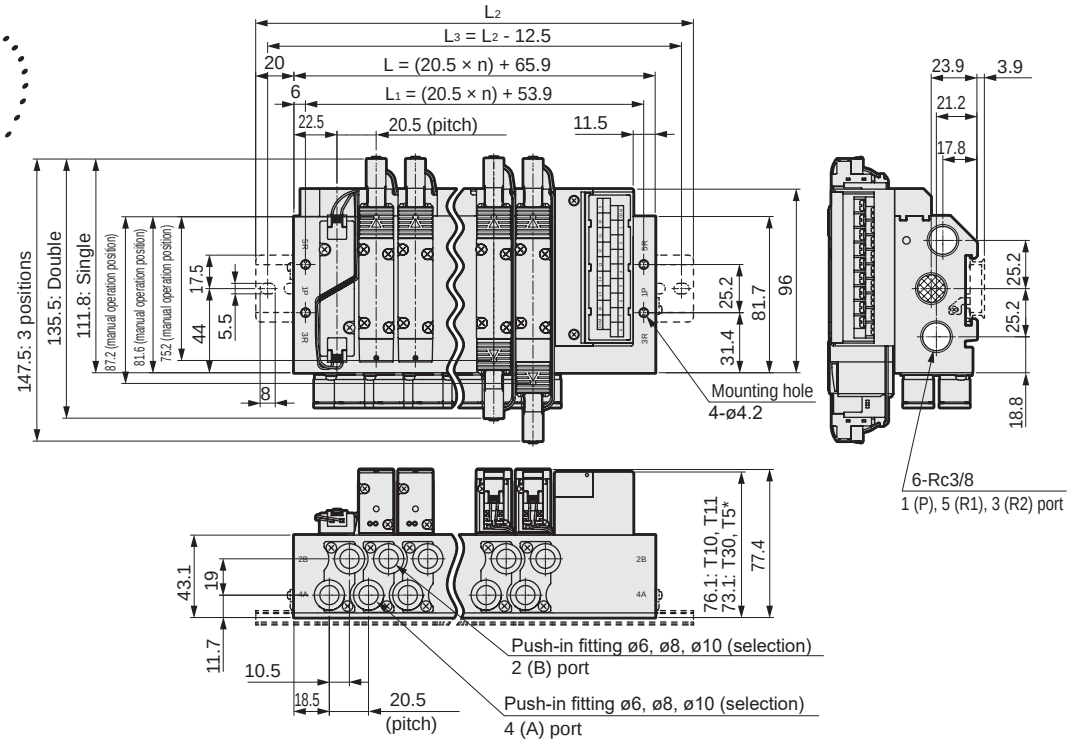

Station No.	2	3	4	5	6	7	8	9	10	11	12	13	14	15	16
L	106.9	127.4	147.9	168.4	188.9	209.4	229.9	250.4	270.9	291.4	311.9	332.4	352.9	373.4	393.9
L_1	94.9	115.4	135.9	156.4	176.9	197.4	217.9	238.4	258.9	279.4	299.9	320.4	340.9	361.4	381.9
L_2	150.0	175.0	200.0	212.5	237.5	250.0	275.0	300.0	312.5	337.5	362.5	375.0	400.0	412.5	437.5
L_3	137.5	162.5	187.5	200.0	225.0	237.5	262.5	287.5	300.0	325.0	350.0	362.5	387.5	400.0	425.0

Dimensions

M4GB3-P7*

*** This drawing shows the T30. Refer to page 590 for detailed dimensions of the electric block.**
*** Refer to page 754 for details on mounting holes.**

● Reduced wiring left side (T10/T11/T30/T50/T51/T52/T53)
External pilot (K)

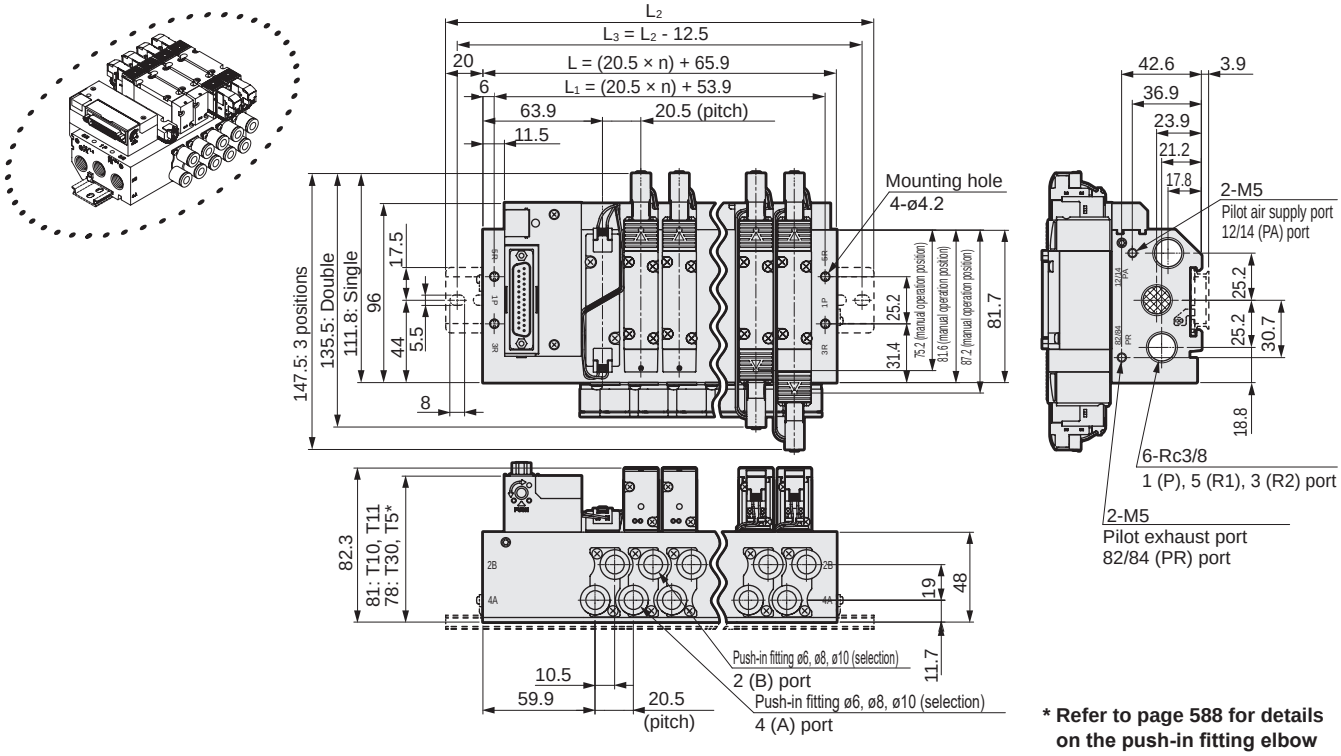

*** Refer to page 588 for details on the push-in fitting elbow (facing up/down).**

● Reduced wiring right side (T10R/T11R/T30R/T50R/T51R/T52R/T53R)
External pilot (K)

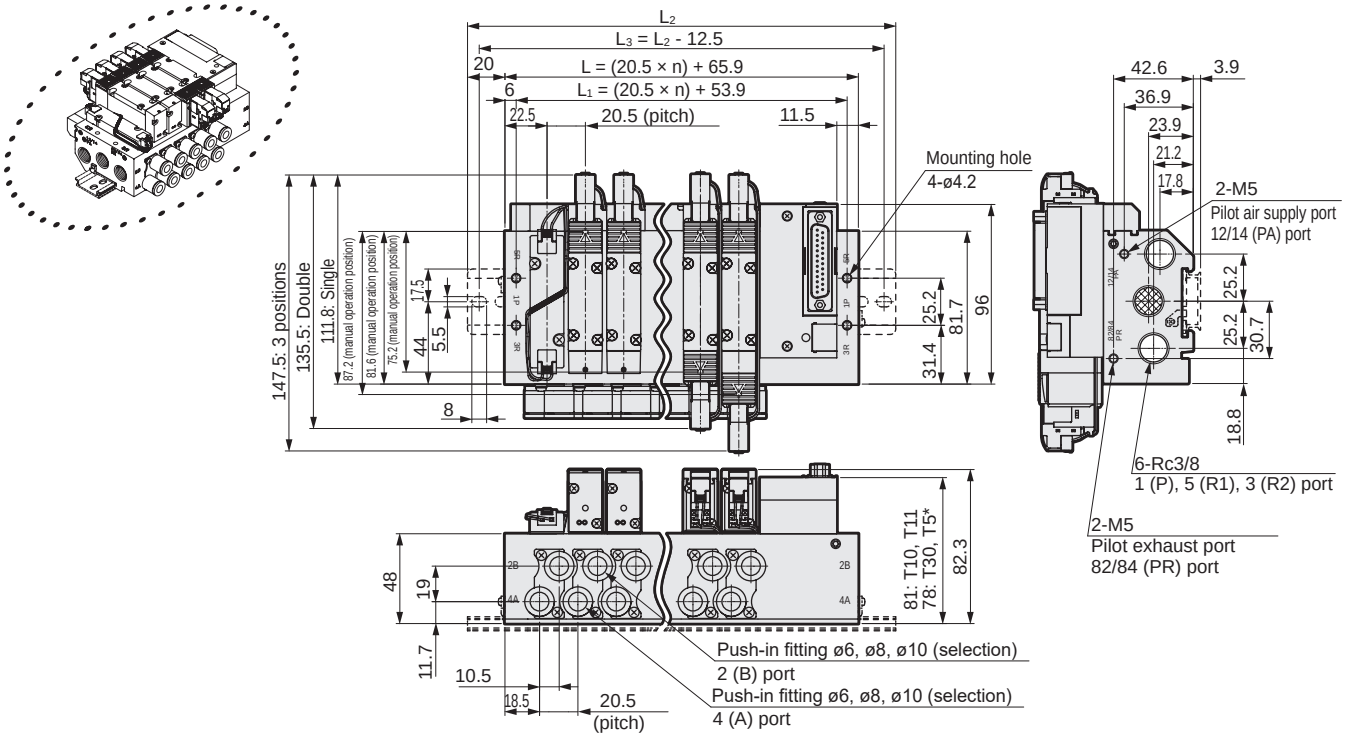

Station No.	2	3	4	5	6	7	8	9	10	11	12	13	14	15	16
L	106.9	127.4	147.9	168.4	188.9	209.4	229.9	250.4	270.9	291.4	311.9	332.4	352.9	373.4	393.9
L_1	94.9	115.4	135.9	156.4	176.9	197.4	217.9	238.4	258.9	279.4	299.9	320.4	340.9	361.4	381.9
L_2	150.0	175.0	200.0	212.5	237.5	250.0	275.0	300.0	312.5	337.5	362.5	375.0	400.0	412.5	437.5
L_3	137.5	162.5	187.5	200.0	225.0	237.5	262.5	287.5	300.0	325.0	350.0	362.5	387.5	400.0	425.0

SCPD3
SCM
SSD2
MDC2
SMG
LCM
LCR
LCG
LCX
STM
STG
STR2
MRL2
GRC
Cylinder switch
MN3E MN4E
4GA/B
M4GA/B
MN4GA/B
F.R (module unit)
Clean F.R
Precision R
Press gauge Diff. press gauge
Electro-pneumatic R
Speed controller
Auxiliary valve
Fitting/ tube
Clean air unit
Pressure sensor
Flow rate sensor
Valve for air blow
Ending

Dimensions CAD

M4GB3-P7*

● Serial transmission (T6G1)
DIN rail mounting (D)

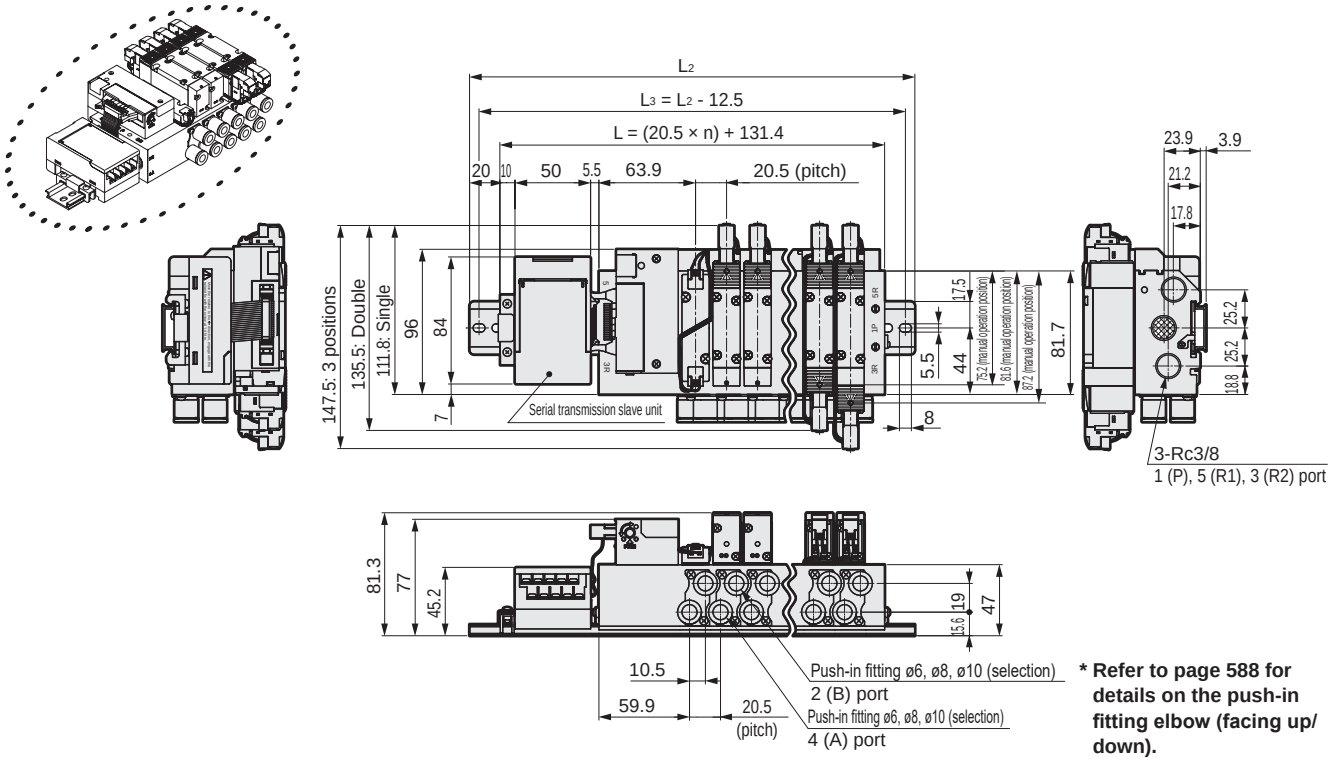

*** Refer to page 588 for details on the push-in fitting elbow (facing up/ down).**

● Serial transmission (T6G1)
DIN rail mounting (D); external pilot (K)

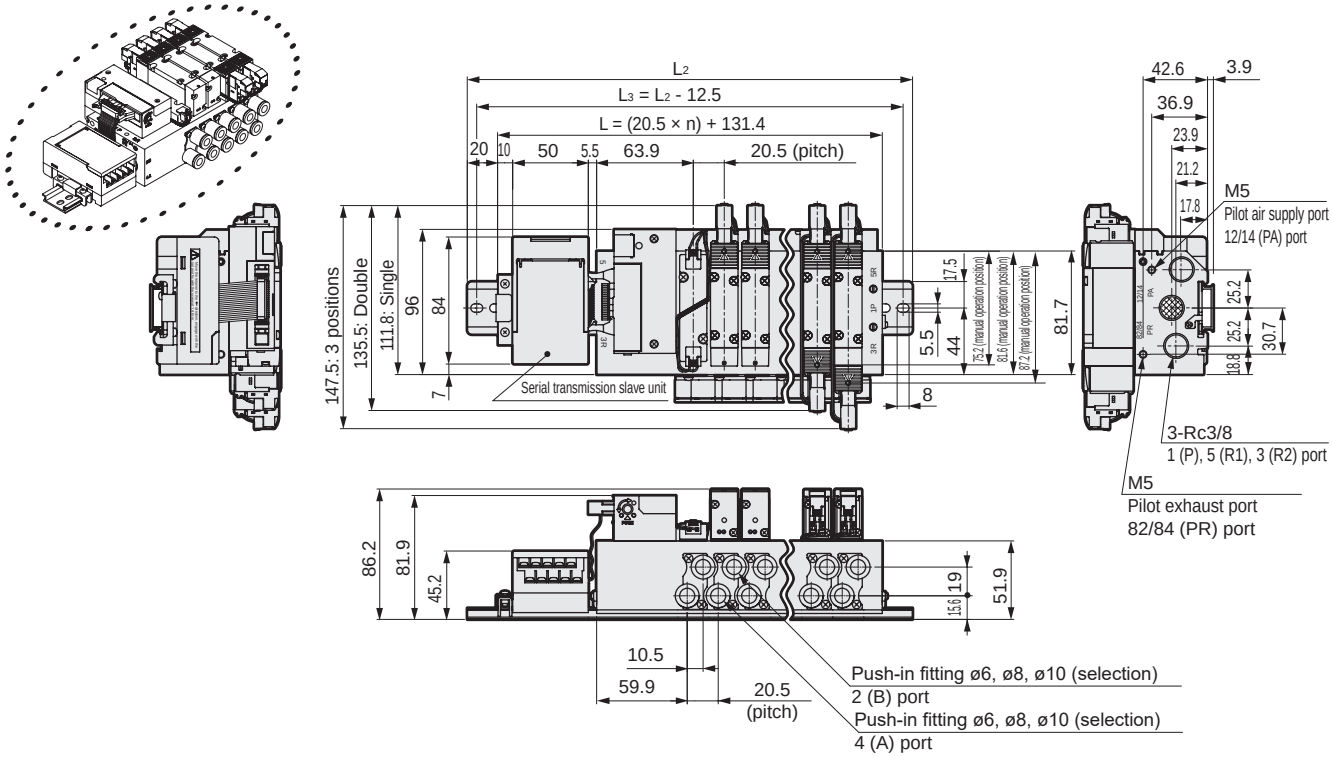

Station No.	2	3	4	5	6	7	8	9	10	11	12	13	14	15	16
L	172.4	192.9	213.4	233.9	254.4	274.9	295.4	315.9	336.4	356.9	377.4	397.9	418.4	438.9	459.4
L2	212.5	237.5	262.5	275.0	300.0	325.0	337.5	362.5	387.5	400.0	425.0	450.0	462.5	487.5	500.0
L3	200.0	225.0	250.0	262.5	287.5	312.5	325.0	350.0	375.0	387.5	412.5	437.5	450.0	475.0	487.5

Dimensions

M4GB3-P7*

* Refer to page 754 for details on mounting holes.

● Serial transmission (T8☐)
DIN rail mounting (D)

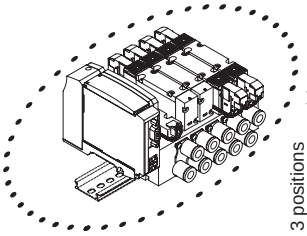

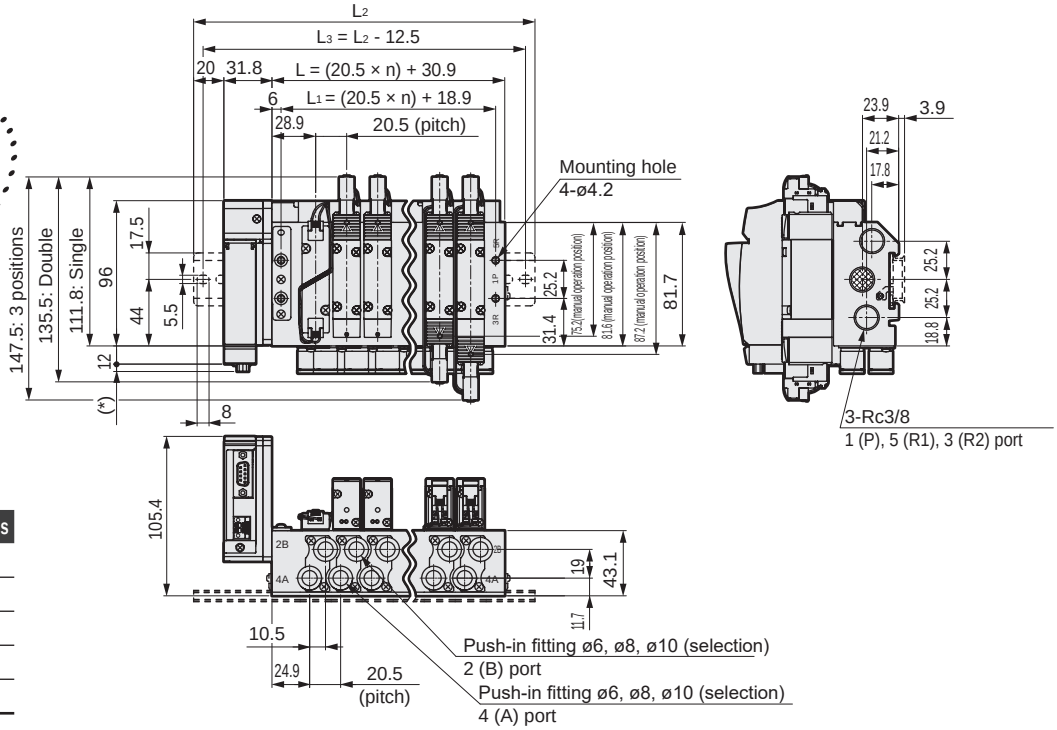

Serial transmission	* Dimensions
T8G☐	1.0
T8P☐	4.9
T8E☐	1.5
T8D☐	1.0
T8K☐	1.0

Station No.	2	3	4	5	6	7	8	9	10	11	12	13	14	15	16
L	71.9	92.4	112.9	133.4	153.9	174.4	194.9	215.4	235.9	256.4	276.9	297.4	317.9	338.4	358.9
L_1	59.9	80.4	100.9	121.4	141.9	162.4	182.9	203.4	223.9	244.4	264.9	285.4	305.9	326.4	346.9
L_2	150.0	175.0	187.5	212.5	237.5	250.0	275.0	287.5	312.5	337.5	350.0	375.0	400.0	412.5	437.5
L_3	137.5	162.5	175.0	200.0	225.0	237.5	262.5	275.0	300.0	325.0	337.5	362.5	387.5	400.0	425.0

● Serial transmission (T8☐)
DIN rail mounting (D); external pilot (K)

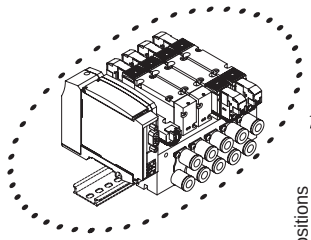

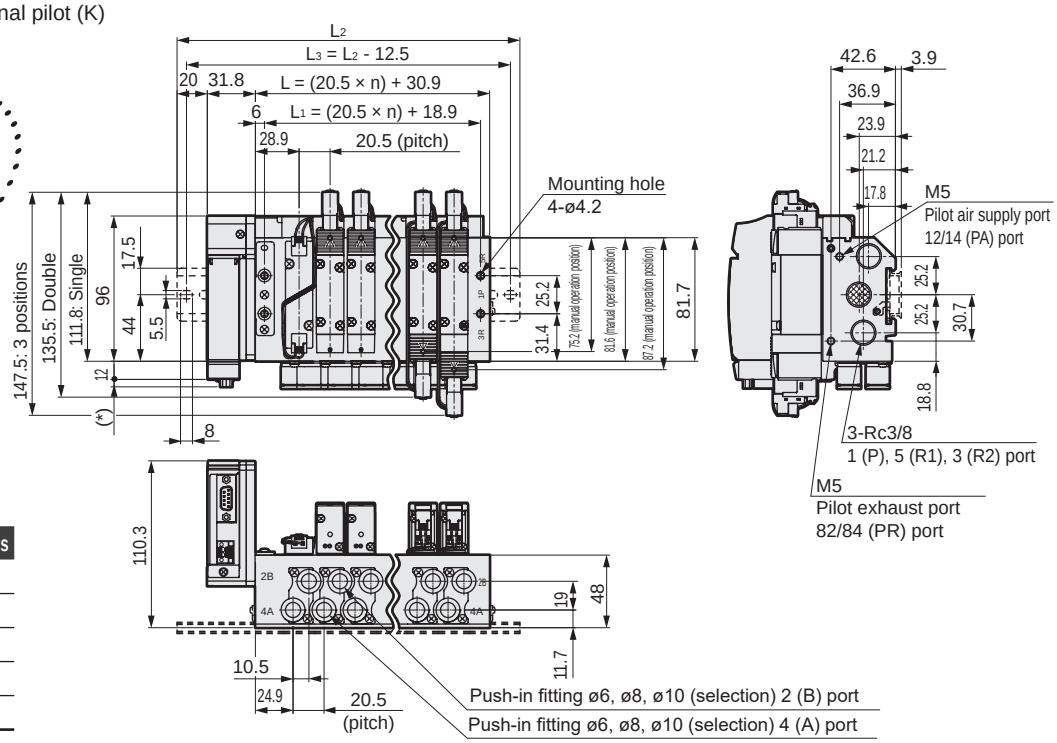

Serial transmission	* Dimensions
T8G☐	1.0
T8P☐	4.9
T8E☐	1.5
T8D☐	1.0
T8K☐	1.0

Station No.	2	3	4	5	6	7	8	9	10	11	12	13	14	15	16
L	71.9	92.4	112.9	133.4	153.9	174.4	194.9	215.4	235.9	256.4	276.9	297.4	317.9	338.4	358.9
L_1	59.9	80.4	100.9	121.4	141.9	162.4	182.9	203.4	223.9	244.4	264.9	285.4	305.9	326.4	346.9
L_2	150.0	175.0	187.5	212.5	237.5	250.0	275.0	287.5	312.5	337.5	350.0	375.0	400.0	412.5	437.5
L_3	137.5	162.5	175.0	200.0	225.0	237.5	262.5	275.0	300.0	325.0	337.5	362.5	387.5	400.0	425.0

SCPD3
SCM
SSD2
MDC2
SMG
LCM
LCR
LCG
LCX
STM
STG
STR2
MRL2
GRC
Cylinder switch
MN3E MN4E
4GA/B
M4GA/B
MN4GA/B
F.R (module unit)
Clean F.R
Precision R
Press gauge Diff. press gauge
Electro-pneumatic R
Speed controller
Auxiliary valve
Fitting/ tube
Clean air unit
Pressure sensor
Flow rate sensor
Valve for air blow
Ending

Dimensions

M4GB3

● Straight fitting

● ø6 (C6) ● ø8 (C8) ● ø10 (C10)

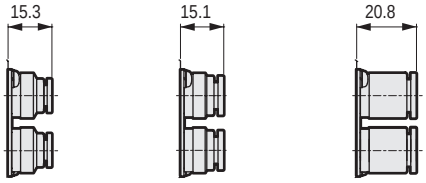

● Straight fitting, single plug

● ø6 (C6NC) ● ø8 (C8NC) ● ø10 (C10NC) ● ø6 (C6NO) ● ø8 (C8NO) ● ø10 (C10NO)

● Radial fitting (facing up)

● ø8 (CL8) ● ø10 (CL10)

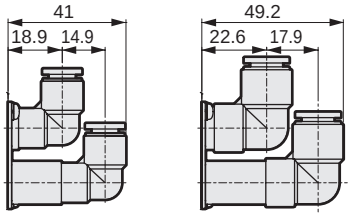

● Radial fitting (facing down)

● ø8 (CD8) ● ø10 (CD10)

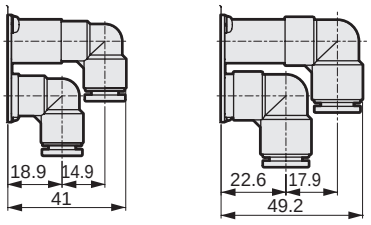

● Radial fitting (facing up), single plug

● ø8 (CL8NC) ● ø10 (CL10NC) ● ø8 (CL8NO) ● ø10 (CL10NO)

● Radial fitting (facing down), single plug

● ø8 (CD8NC) ● ø10 (CD10NC) ● ø8 (CD8NO) ● ø10 (CD10NO)

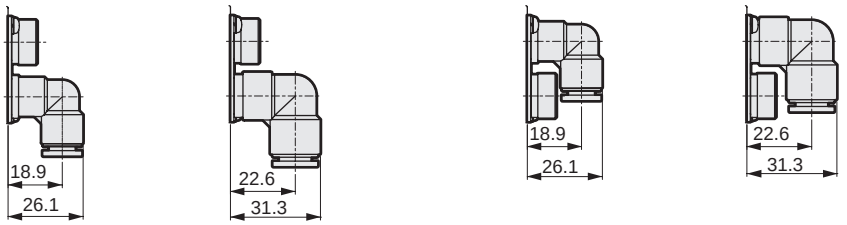

Dimensions

● Fitting straight

● ø5/16" (C8N)

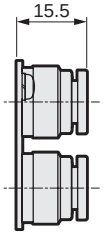

● ø3/8" (C10N)

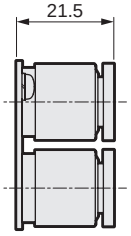

● Straight fitting, single plug

● ø5/16 inch (C8NCN)

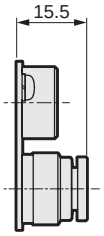

● ø3/8 inch (C10NCN)

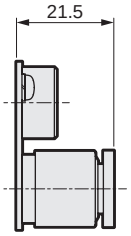

● ø5/16" (C8NON)

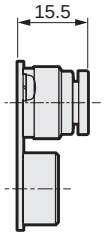

● ø3/8" (C10NON)

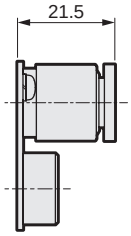

● L fitting (upward)

● ø5/16 inch (CL8N)

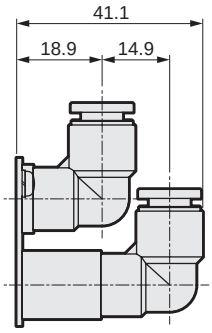

● ø3/8 inch (CL10N)

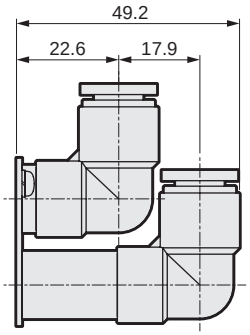

● ø5/16 inch (CD8N)

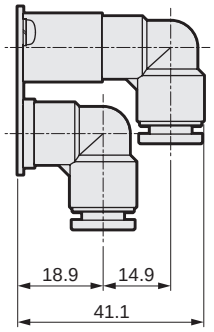

● ø3/8 inch (CD10N)

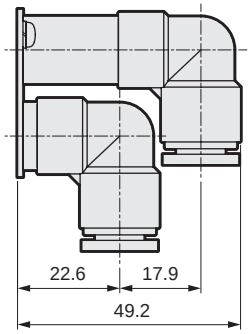

● L fitting (upward), single plug

● ø5/16 inch (CL8NCN)

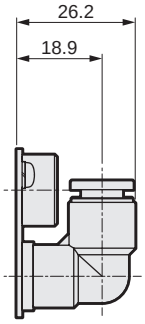

● ø3/8 inch (CL10NCN)

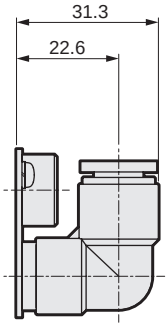

● ø5/16" (CL8NON)

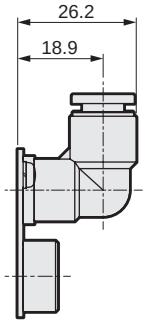

● ø3/8" (CL10NON)

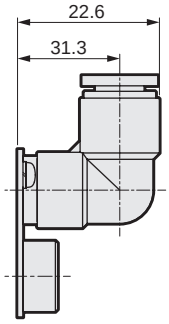

● L fitting (downward), single plug

● ø5/16 inch (CD8NCN)

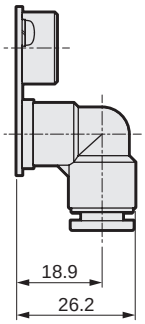

● ø3/8 inch (CD10NCN)

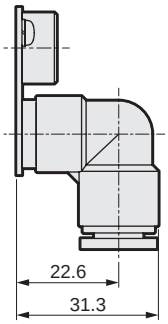

● ø5/16" (CD8NON)

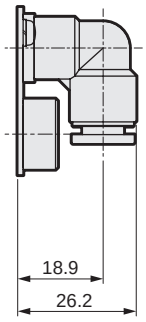

● ø3/8" (CD10NON)

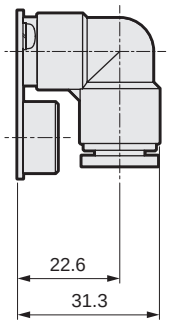

Reduced wiring section: dimensions

● Common terminal block (M3 thread) T10

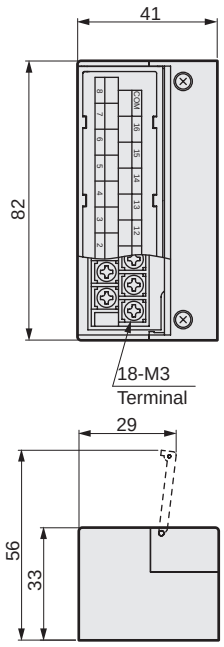

● Common terminal block (clamping) T11

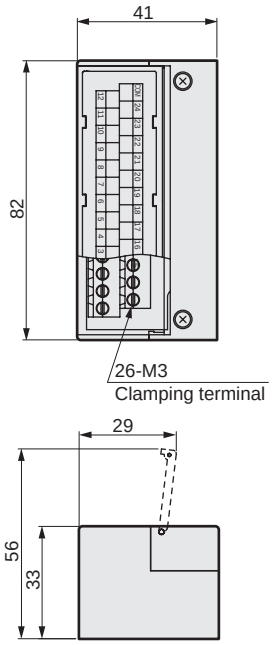

● D sub-connector T30

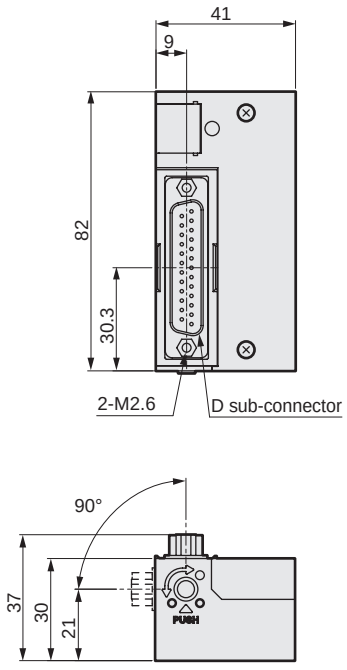

● 20 pin flat cable connector (with power supply terminal) T50

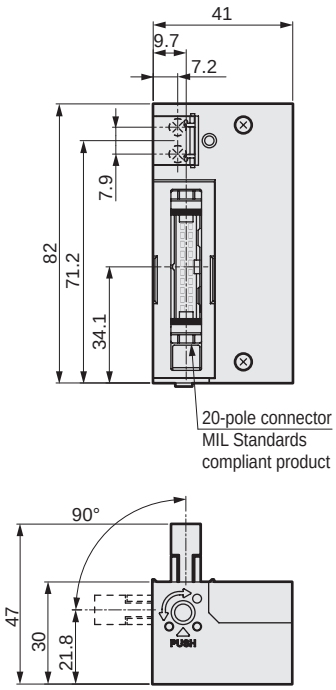

● 20 pin flat cable connector (without power supply terminal) T51

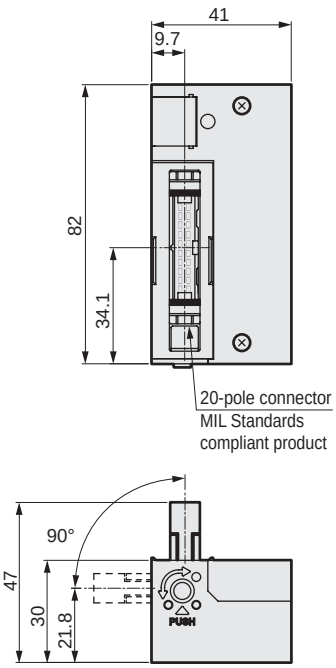

● 10 pin flat cable connector (without power supply terminal) T52

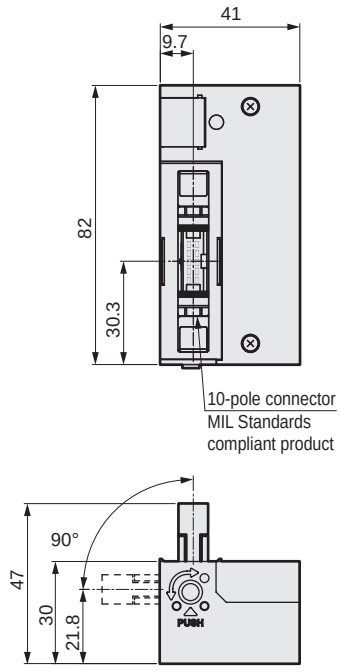

● 26 pin flat cable connector (without power supply terminal) T53

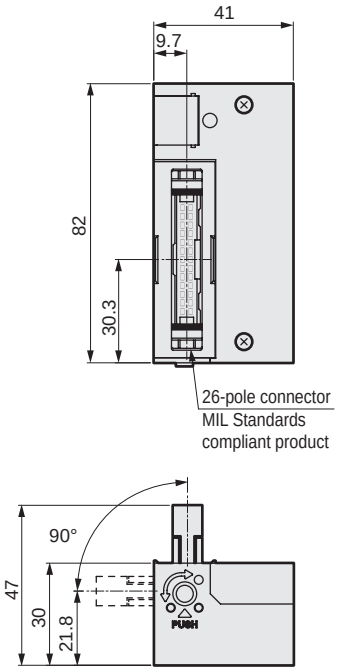

● Discrete serial transmission slave unit (connector type)

4GR - OPP3 - 1G

Ⓐ Wiring method

Code	Content			
Ⓐ Wiring method				
1G	T6G1	CC-Link	NPN	16 points

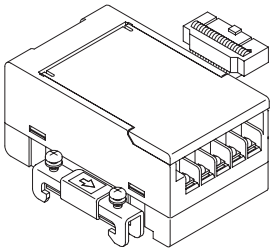

● Discrete serial transmission slave unit (thin slot type)

4GR - OPP7 - 2G

Ⓐ Wiring method

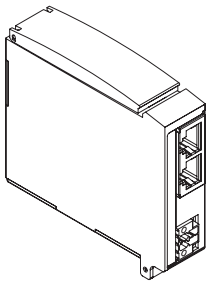

Code	Content			
Ⓐ Wiring method				
1G	T8G1	CC-Link	NPN	16 points
2G	T8G2			32 points
1G-P	T8GP1		PNP	16 points
2G-P	T8GP2			32 points
1P	T8P1	PROFIBUS-DP	NPN	16 points
2P	T8P2			32 points
1P-P	T8PP1		PNP	16 points
2P-P	T8PP2			32 points
1EC	T8EC1	EtherCAT	NPN	16 points
2EC	T8EC2			32 points
1EC-P	T8ECP1		PNP	16 points
2EC-P	T8ECP2			32 points
1EN	T8EN1	EtherNet/IP	NPN	16 points
2EN	T8EN2			32 points
1EN-P	T8ENP1		PNP	16 points
2EN-P	T8ENP2			32 points
1D	T8D1	DeviceNet	NPN	16 points
2D	T8D2			32 points
1D-P	T8DP1		PNP	16 points
2D-P	T8DP2			32 points
1EB	T8EB1	CC-Link IEF Basic	NPN	16 points
2EB	T8EB2			32 points
1EB-P	T8EBP1		PNP	16 points
2EB-P	T8EBP2			32 points
1EF	T8EF1	CC-Link IE Field	NPN	16 points
2EF	T8EF2			32 points
1EF-P	T8EFP1		PNP	16 points
2EF-P	T8EFP2			32 points
1EP	T8EP1	PROFINET	NPN	16 points
2EP	T8EP2			32 points
1EP-P	T8EPP1		PNP	16 points
2EP-P	T8EPP2			32 points
1KC	T8KC1	IO-Link	NPN	16 points
2KC	T8KC2			32 points
1KC-P	T8KCP1		PNP	16 points
2KC-P	T8KCP2			32 points

Related products

● Air supply spacer

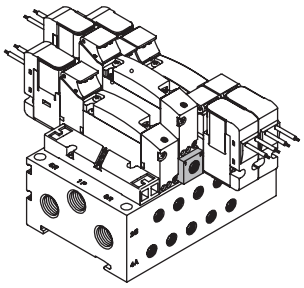

Specifications

Model No.	P→A/B		A/B→R		Weight g
	C [dm³/(s·bar)]	b	C [dm³/(s·bar)]	b	
4G1	0.70	0.23	0.93	0.16	8
4G2	1.6	0.17	1.8	0.16	35
4G3	2.6	0.22	3.1	0.14	56

Note 1: The values are with the valve mounted.
Note 2: Effective cross-sectional area S and sonic conductance C are converted as S ≒ 5.0 × C.

How to order discrete units

● Air supply spacer

Air supply spacer model No.

4G 3 R-P- GWS10 A - P70

Ⓐ Air supply spacer model No.
Ⓑ Port size
Ⓒ Set screw
Ⓓ Clean room specifications

Code	Content	Valve model No. 4GA1	4GB1	4GA2	4GB2	4GA3	4GB3
Ⓐ Air supply spacer model No.							
1	For 4G1	●					
2	For 4G2			●			
3	For 4G3					●	
Ⓑ Port size							
Blank	M5(4G1), Rc1/8(4G2), Rc1/4(4G3)	●		●		●	
GWS4	ø4 fitting	●					
GWS6	ø6 fitting	●		●			
GWS8	ø8 fitting			●		●	
GWS10	ø10 fitting					●	
06N	1/8NPT			●			
08N	1/4NPT					●	
06G	G1/8			●			
08G	G1/4					●	
Ⓒ Set screw							
Blank		●		●		●	
A	4GA3 A/B port: Rc1/4 thread					● (*1)	
Ⓓ Clean room specifications							
	Structure / Material restriction						
P70	Exhaust treatment / -	●		●		●	

is not available.

Attached product: Set screw 2 (*2), PR check valve 2, body gasket 1

⚠ Precautions for model No. selection

*1: Specify "A" only when using with 4GA3*9R-08 for mounting base. (The valve set screw length differs.)
*2: Specify the air supply spacer mounting position and quantity in manifold specifications of each catalog.
*3: If the A/B port fitting is the elbow (facing up), turn the air supply port of the air supply spacer toward the reverse side (a solenoid side).
*4: If the elbow (facing up) A/B port fitting is used for the reduced wiring manifold, the air supply spacer cannot be selected.
*5: Combination with the masking plate is not supported.

Related products

● Air supply spacer

Dimensions

● 4G1

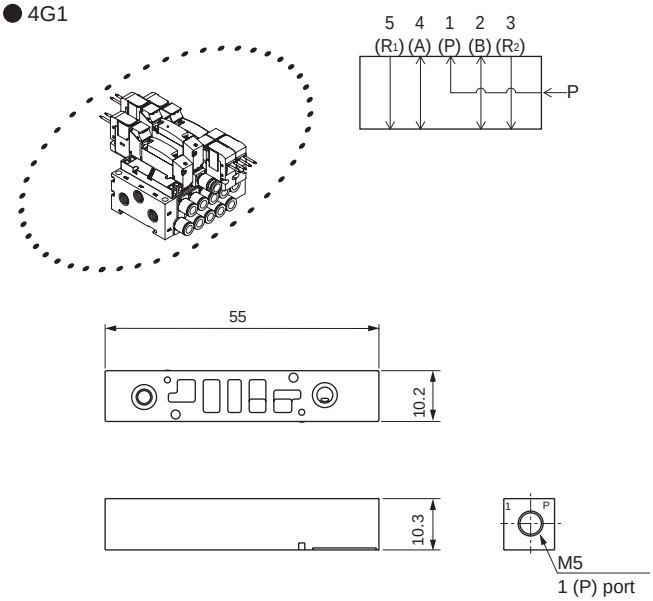

● 4G2

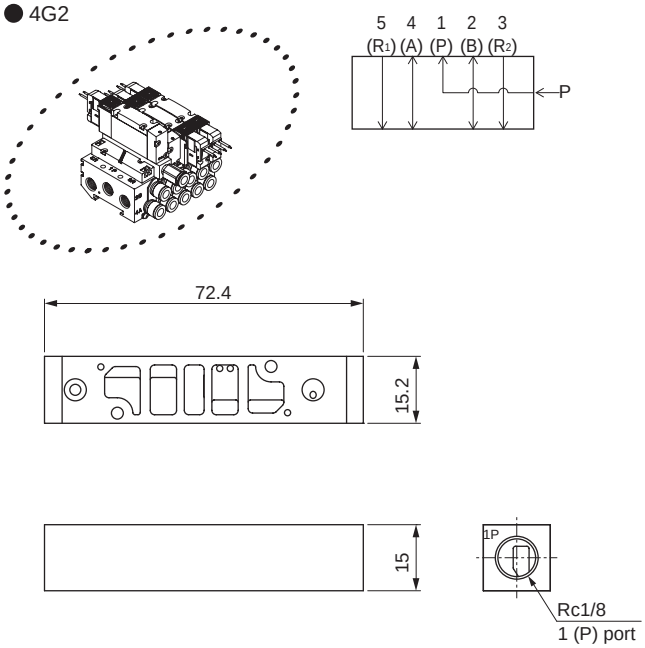

Dimensions when mounted

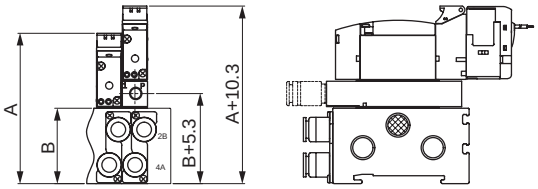

Dimensions when mounted

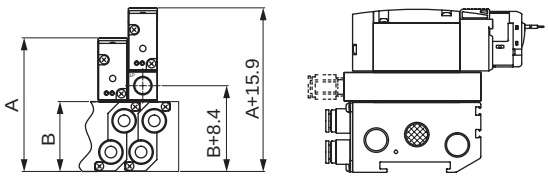

● 4G3

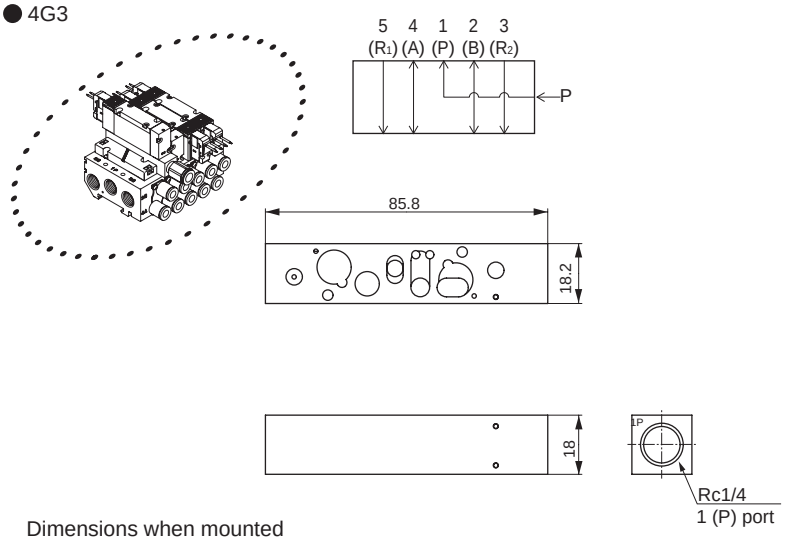

Dimensions when mounted

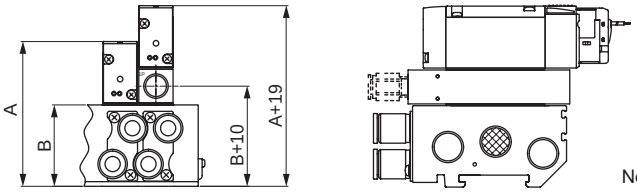

Note: For A and B dimensions, check the dimensions of respective specifications.

SCPD3
SCM
SSD2
MDC2
SMG
LCM
LCR
LCG
LCX
STM
STG
STR2
MRL2
GRC
Cylinder switch
MN3E MN4E
4GA/B
M4GA/B
MN4GA/B
F.R (module unit)
Clean F.R
Precision R
Press gauge Diff. press gauge
Electro-pneumatic R
Speed controller
Auxiliary valve
Fitting/ tube
Clean air unit
Pressure sensor
Flow rate sensor
Valve for air blow
Ending

Related products

● Exhaust spacer

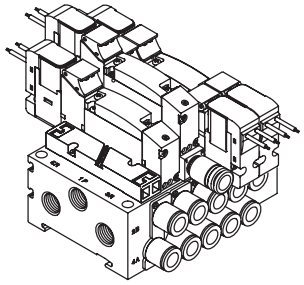

Specifications

Model No.	P→A/B		A/B→R		Weight g
	C [dm³/(s·bar)]	b	C [dm³/(s·bar)]	b	
4G1	0.94	0.28	0.68	0.33	7
4G2	1.5	0.24	1.9	0.24	34
4G3	3.4	0.21	2.9	0.27	58

Note 1: The values are with the valve mounted.
Note 2: Effective cross-sectional area S and sonic conductance C are converted as S ≈ 5.0 × C.

How to order discrete units

● Exhaust spacer

Exhaust spacer model No.

4G 3 R - R - GWS10 A - P70

- Ⓐ Exhaust spacer model No.
- Ⓑ Port size
- Ⓒ Set screw
- Ⓓ Clean room specifications

Code	Content	Valve model No. 4GA1	4GB1	4GA2	4GB2	4GA3	4GB3
Ⓐ Air supply spacer model No.							
1	For 4G1	●					
2	For 4G2			●			
3	For 4G3					●	
Ⓑ Port size							
Blank	M5(4G1), Rc1/8(4G2), Rc1/4(4G3)	●		●		●	
GWS4	ø4 fitting	●					
GWS6	ø6 fitting	●		●			
GWS8	ø8 fitting			●		●	
GWS10	ø10 fitting					●	
06N	1/8NPT			●			
06G	G1/8			●			
08G	G1/4					●	
Ⓒ Set screw							
Blank		●		●		●	
A	4GA3 A/B port: Rc1/4 thread					● (*1)	
Ⓓ Clean room specifications							
	Structure / Material restriction						
P70	Exhaust treatment / -	●		●		●	

is not available.

Attached product: Set screw 2 (*2), PR check valve 2, body gasket 1

⚠ Precautions for model No. selection

*1: Specify "A" only when using with 4GA3*9R-08 for mounting base. (The valve set screw length differs.)
*2: Indicate the mounting positions and quantity of the exhaust spacers in the manifold specifications of each catalog.
*3: When the A/B port fitting is an elbow (upward), the exhaust port of the exhaust spacer will be faced towards the opposite side (a solenoid side).
*4: With the reduced wiring manifold, when the A/B port fitting is an elbow (upward), the exhaust spacer cannot be selected.
*5: Combination with the masking plate is not supported.

Related products

● Exhaust spacer

Dimensions

● 4G1

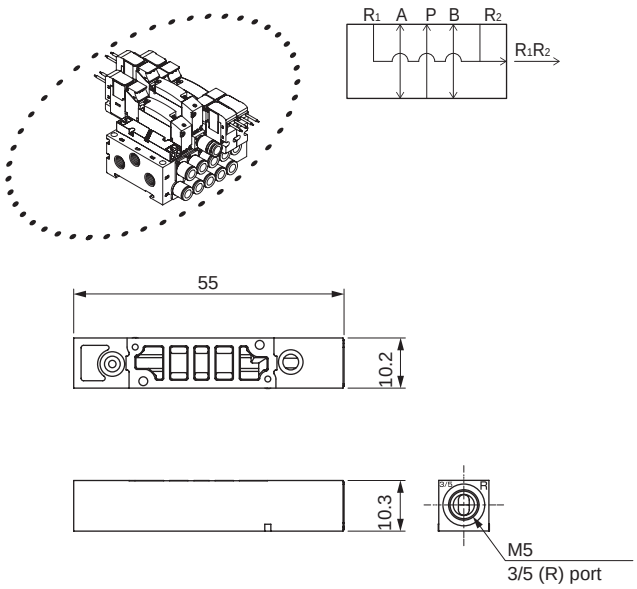

● 4G2

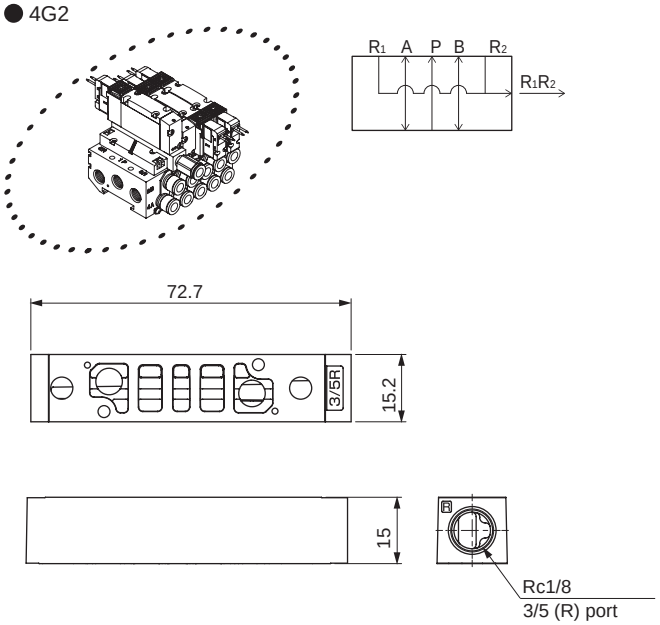

Dimensions when mounted

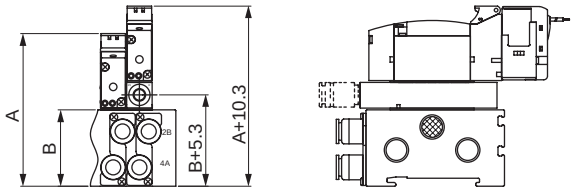

Dimensions when mounted

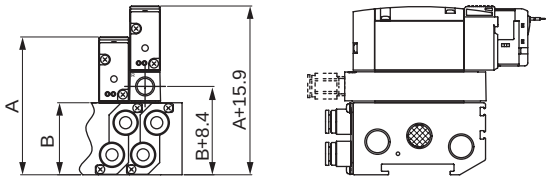

● 4G3

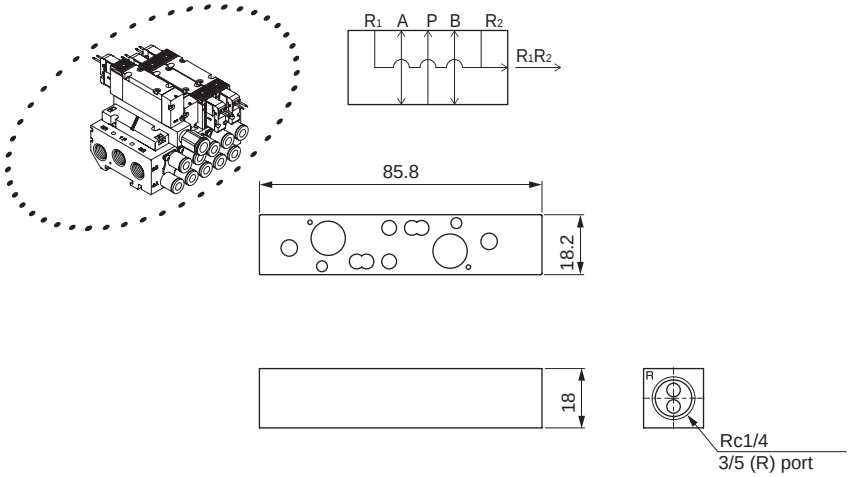

Dimensions when mounted

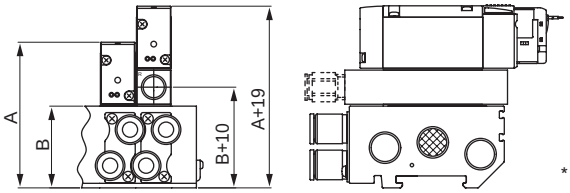

* For A and B dimensions, check the dimensions of respective specifications.

Related products

● Double wiring (single spare wiring)

For manifold

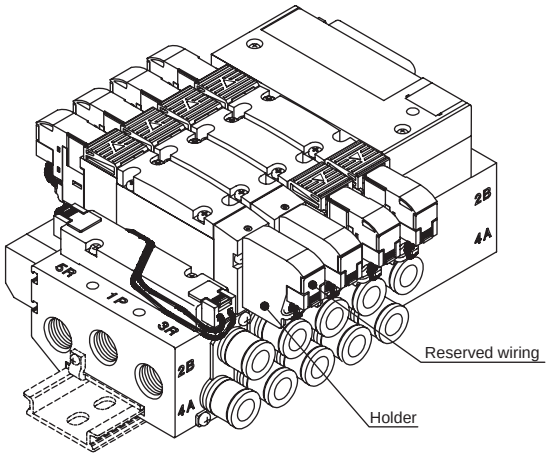

For discrete valve (A2N)

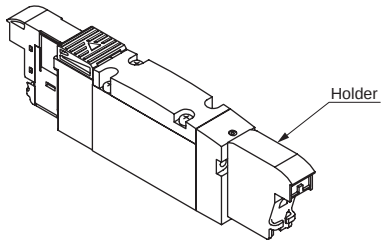

A holder for retaining the socket assembly is attached.
(A-type socket assembly is not attached.)
This is used to impose and retain the socket assembly that is no longer required when the valve is changed from the double solenoid to the single solenoid.

For the single solenoid, spare wiring (holder and A-type socket assembly) is attached on the cap side.
This is used when the valve is changed from the double solenoid to the single solenoid.
Without the need to fix up the A-type socket assembly separately, valve change work becomes easier.

How to order

● Model No. with manifold installed (example)

M 4GA1 1 0 R - C6 - T30 W1 H - 10 - 3 - P70

- A Model No.
- B Solenoid position
- C Port size
- D Reduced wiring
- E Terminal and connector pin wiring
- F Option
- G Station No.
- H Voltage
- I Clean room specifications

Code	Content
E Terminal and connector pin wiring	
W1	Double wiring (with single spare wiring)

* For details of model No., refer to How to order of individual series.

Related products

● Blanking plug

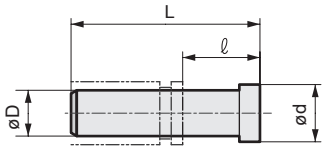

Model No.	D	L	ℓ	d
GWP4-B-P70	ø4	27	16	6
GWP6-B-P70	ø6	29	11.5	8
GWP8-B-P70	ø8	33	14	10
GWP10-B-P70	ø10	40	18.5	12

PG-P2-B (for ø1.8)

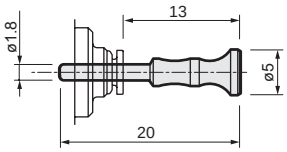

● Plug type

Part name	Model No.	Compatible bore size	Appearance
Threaded plug	4G1R-M5P	M5	(FPL-M5)
	4G2R-06P-P70	Rc1/8	Hexagon socket plug
	4G3R-08P-P70	Rc1/4	
	4G3R-10P-P70	Rc3/8	
	4G2R-06NP-P70	NPT1/8	
	4G3R-08NP-P70	NPT1/4	
	4G3R-10NP-P70	NPT3/8	
	4G2R-06GP-P70	G1/8	
	4G3R-08GP-P70	G1/4	
	4G3R-10GP-P70	G3/8	

● DIN rail

N4GR-BAA L2 -P70

Rail length

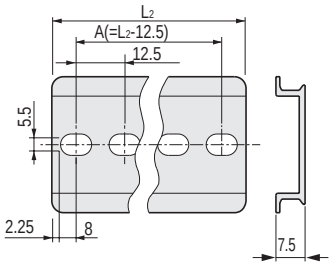

*1: Rail lengths not included in the list are made to order products.

L1: Manifold length		L2: Rail length	A: Mounting pitch
35	47.5 or less	87.5	75
Over 47.5	60 or less	100	87.5
60	72.5	112.5	100
72.5	85	125	112.5
85	97.5	137.5	125
97.5	110	150	137.5
110	122.5	162.5	150
122.5	135	175	162.5
135	147.5	187.5	175
147.5	160	200	187.5
160	172.5	212.5	200
172.5	185	225	212.5
185	197.5	237.5	225
197.5	210	250	237.5
210	222.5	262.5	250
222.5	235	275	262.5
235	247.5	287.5	275
247.5	260	300	287.5
260	272.5	312.5	300
272.5	285	325	312.5
285	297.5	337.5	325
297.5	310	350	337.5
310	322.5	362.5	350
322.5	335	375	362.5
335	347.5	387.5	375
347.5	360	400	387.5
360	372.5	412.5	400
372.5	385	425	412.5
385	397.5	437.5	425
397.5	410	450	437.5
410	422.5	462.5	450
422.5	435	475	462.5
435	447.5	487.5	475
447.5	460	500	487.5
460	472.5	512.5	500
472.5	485	525	512.5
485	497.5	537.5	525
497.5	510	550	537.5

If the length exceeds 510, calculate using a multiple of 12.5.

● Push-in fitting tube remover
ø1.8/ø4 for push-in fitting
4GR-EOT18-4

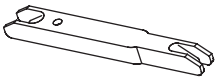

Push-in fitting for ø4/ø6
4GR-EOT4-6

SCPD3
SCM
SSD2
MDC2
SMG
LCM
LCR
LCG
LCX
STM
STG
STR2
MRL2
GRC
Cylinder switch
MN3E MN4E
4GA/B
M4GA/B
MN4GA/B
F.R (module unit)
Clean F.R
Precision R
Press gauge Diff. press gauge
Electro-pneumatic R
Speed controller
Auxiliary valve
Fitting/ tube
Clean air unit
Pressure sensor
Flow rate sensor
Valve for air blow
Ending

Related parts

(1) Mounting plate (P) kit

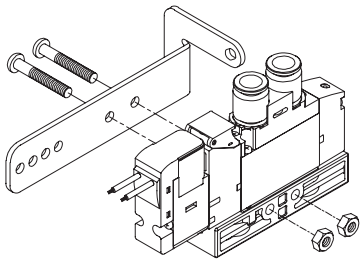

Mounting (P) kit

Model No.	Kit model No.	Accessory part
3GA1/4GA1	4G1R-MOUNT-PLATE-KIT-P70	Mounting plate, set screw 2, nut 2
3GA2/4GA2	4G2R-MOUNT-PLATE-KIT-P70	Mounting plate, set screw 2
3GA3/4GA3	4G3R-MOUNT-PLATE-KIT-P70	Mounting plate, set screw 2

(2) Discrete cartridge push-in fitting related part

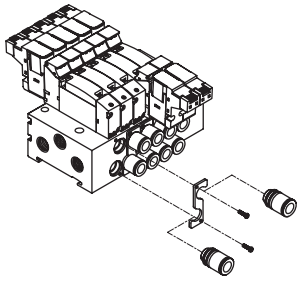

Fitting stopper plate kit

Model No.	Kit model No.
M4G1	4G1R-JNT-STP-PLATE-KIT-*1-P70
M4G2	4G2R-JNT-STP-PLATE-KIT-*2-P70
M4G3	4G3R-JNT-STP-PLATE-KIT−P70

*1: For C8, specify “C8.”
*2: For C10, specify “C10.”

(3) Adapter related kit

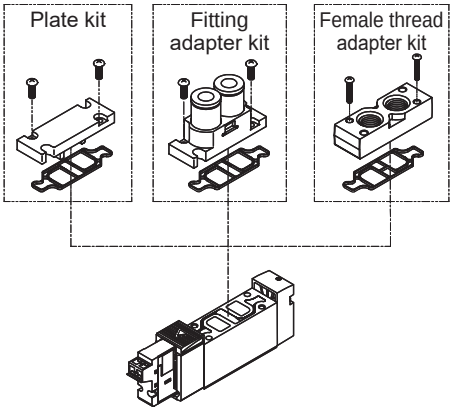

Plate kit

Model No.	Kit model No.	Accessory part
3GB1/4GB1	4G1R-PLATE-KIT-P70	Plate, gasket, set screw 2
3GB2/4GB2	4G2R-PLATE-KIT-P70	Plate, gasket, set screw 2
4GB3	4G3R-PLATE-KIT-P70	Plate, gasket, set screw 2

Fitting adapter kit

4G1 R - JNT - ADAPTOR - KIT - C4 NC - F - P70

Ⓐ Model No.
Ⓑ Port size
Ⓒ NC/NO
Ⓓ Option
Clean room specifications

		Ⓐ Model No. 3G1	3G2	3G3	4G1	4G2	4G3
Ⓑ Port size							
CF	ø1.8 barbed	●			●		
C18	ø1.8 straight	●			●		
C4	ø4 straight	●	●			●	
C6	ø6 straight	●	●	●		●	●
C8	ø8 straight		●	●		●	●
C10	ø10 straight			●			●
C3N	ø1/8 inch straight	●			●		
C4N	ø5/32 inch straight	●			●		
C6N	ø1/4 inch straight		●			●	
C8N	ø5/16 inch straight		●	●		●	●
C10N	ø3/8 inch straight			●			●
Ⓒ NC/NO							
NC	For 3GA*10	●	●	●			
N0	For 3GA*110	●	●	●			
Blank	3GA*10, 3GA*110 excluded	●	●		●	●	●
Ⓓ Option							
Blank		●	●	●	●	●	●
F	A/B port filter integrated	●	●	●	●	●	●

Note: Fitting adapter (with fitting), gasket and set screws (2) are included.

Female thread adapter kit

Model No.	Kit model No.	Accessory part
3GA1/4GA1	4G1R-FML-ADAPTOR-KIT- Port size - Option - P70	Female thread adapter, gasket, set screw 2
3GA2/4GA2	4G2R-FML-ADAPTOR-KIT- Port size - Option - P70	Female thread adapter, gasket, set screw 2
3GA3/4GA3	4G3R-FML-ADAPTOR-KIT- Port size - Option - P70	Female thread adapter, gasket, set screw 2, body set screw 2

Specify the Option “F” when using the built-in A/B port filter.

Related parts

(4) Manifold related parts

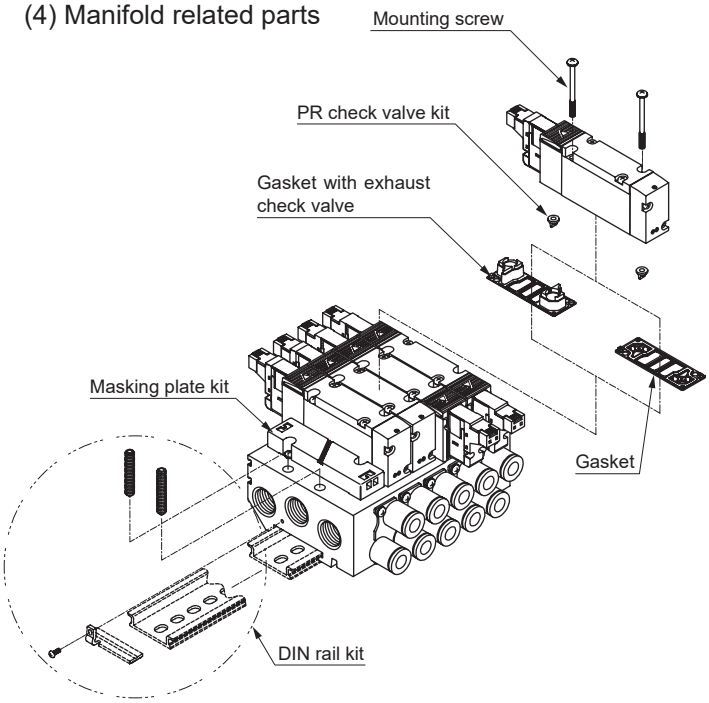

Masking plate kit

Model No.	Model No.	Descriptions	Remarks
M3G1/M4G1	4G1R-MP-P70	Masking plate Gasket Set screw 2	* 3G3/4G3 has two PR check valves.
M3G2/M4G2	4G2R-MP-P70		
M3G3/M4G3	4G3R-MP-P70		

Gasket

Model No.	Part model No.
3G1/4G1	4G1R-GASKET-P70
3G1/4G1 (For masking plate)	4G1R-MP-GASKET-P70
3G2/4G2	4G2R-GASKET-P70
3G2/4G2 (For masking plate)	4G2R-MP-GASKET-P70
3G3/4G3	4G3R-GASKET-P70

Gasket with exhaust check valve

Model No.	Part model No.
3G1/4G1	4G1R-CHECK-VALVE-P70
3G2/4G2	4G2R-CHECK-VALVE-P70
3G3/4G3	4G3R-CHECK-VALVE-P70

PR check valve kit (2 per set)

Model No.	Kit model No.
3G1/4G1	4G1R-PR-P70
3G2/4G2	4G2R-PR-P70
3G3/4G3	4G3R-PR-P70

Set screw (10 per set)

Model No.	Part model No.
3G1/4G1	4G1R-SET-SCREW-P70
3G2/4G2	4G2R-SET-SCREW-P70
3G3/4G3	4G3R-SET-SCREW-P70
3GA3/4GA3 (for 08 port size)	4G3R-SET-SCREW-L-P70

DIN rail kit

Model No.	Model No.	Descriptions
M4G1	4GA1R-BAA Length - Option D - P70	DIN rail, set screw 2, lock nut 2
	4GB1R-BAA Length - Option D - P70	
M4G2	4GA2R-BAA Length - Option D - P70	DIN rail/holder 2 tapping screw 2, set screw 4
	4GB2R-BAA Length - Option D - P70	
M4G3	4GA3R-BAA Length - Option D - P70	
	4GB3R-BAA Length - Option D - P70	

Specify the length "0" when the DIN rail is not required.
Specify the Option "K" when using with the manifold base for external pilot.

Set the DIN rail length, referring to the current manifold dimensions and DIN rail length quick reference list (page 701).

SCPD3
SCM
SSD2
MDC2
SMG
LCM
LCR
LCG
LCX
STM
STG
STR2
MRL2
GRC
Cylinder switch
MN3E MN4E
4GA/B
M4GA/B
MN4GA/B
F.R (module unit)
Clean F.R
Precision R
Press gauge Diff. press gauge
Electro-pneumatic R
Speed controller
Auxiliary valve
Fitting/ tube
Clean air unit
Pressure sensor
Flow rate sensor
Valve for air blow
Ending

Related parts

(5) Sub-plate

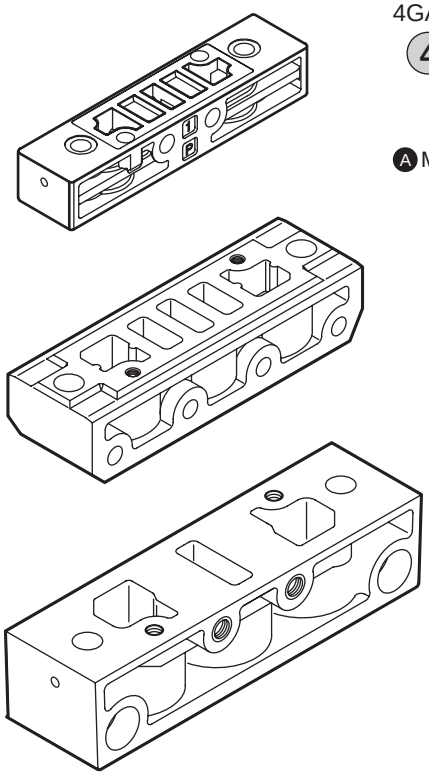

4GA piping adaptor

4G1 R - ADAPTOR - M5 - ◯ - P70

Ⓐ Model No.

Ⓑ Port size

Ⓒ Option

Ⓐ Model No.		4G1	4G2	4G3
Ⓑ Port size (P/R1/R2 port)				
M5	M5	●		
06	Rc1/8		●	
08	Rc1/4			●
06N	1/8NPT		●	
08N	1/4NPT			○
06G	G1/8		●	
08G	G1/4			○
Ⓒ Option				
P	With mounting plate (attached)	●	●	●

is not available.
○ Custom order products. Contact CKD for details.

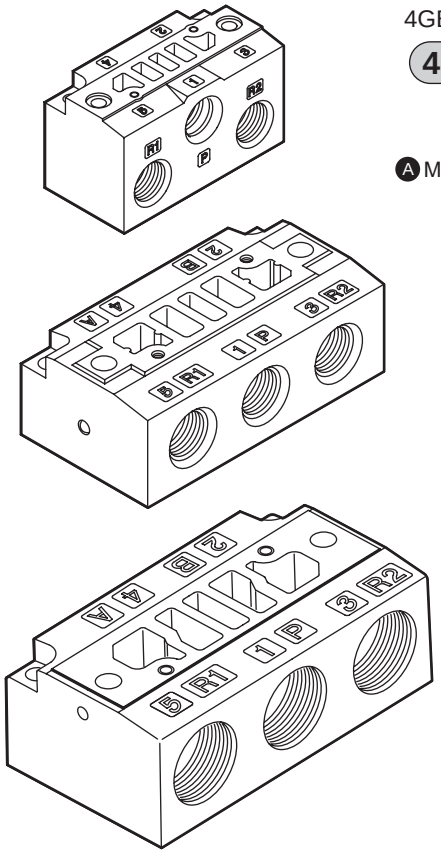

4GB discrete sub-plate

4G1 R - SUB - BASE - 06 - ◯ - P70

Ⓐ Model No.

Ⓑ Port size

Ⓒ Option

Ⓐ Model No.		4G1	4G2	4G3
Ⓑ Port size (A/B/P/R1/R2 port)				
06	Rc1/8	●		
08	Rc1/4		●	●
10	Rc3/8			●
06N	1/8NPT	○		
08N	1/4NPT		○	○
10N	3/8NPT			○
06G	G1/8	○		
08G	G1/4		○	○
010G	G3/8			○
Ⓒ Option				
K	External pilot	●	●	●
F	A/B port filter integrated *1	●	●	●

*1: P port is equipped with a filter as standard.

is not available.
○ Custom order products. Contact CKD for details.

Related parts

(6) Manifold sub-plate kit individual wiring

● M4GA sub-plate

M4GA1 R - 00 - ( ) - 2 - P70

Ⓐ Model No.
Ⓑ Port size *1
Ⓒ Option
Ⓓ Station No.

Code	Content
Ⓐ Model No.	
M4GA1	Metal base, 4G1 size, direct piping
M4GA2	Metal base, 4G2 size, direct piping
M4GA3	Metal base, 4G3 size, direct piping
Ⓑ Port size	
00	Rc thread
00N	NPT thread
00G	G thread
Ⓒ Option	
Blank	
K	External pilot
Ⓓ Station No.	
2	2 stations
to	to
20	Refer to the specifications page for the max. station number.

Note 1: Port sizes of P/R1/R2 ports

● M4GB1 sub-plate

M4GB1R - CL4 - ( ) D - 2 - P70

Ⓐ Port size
Ⓑ Option
Ⓒ Mount
Ⓓ Station No.

Code	Content	
Ⓐ Port size		
Port	**4 (A)/2 (B) port**	**P/R1/R2 port**
CF	ø1.8 barbed fitting (applicable tube UP-9102-**)	Rc1/8
C18	ø1.8 push-in fitting (applicable tube UP-9402-**)	
C4	ø4 push-in fitting	
C6	ø6 push-in fitting	
C8	ø8 push-in fitting (*1)	
CL18	ø1.8 radial facing-up push-in fitting (applicable tube UP-9402-**)	
CL4	ø4 radial facing-up push-in fitting	
CL6	ø6 radial facing-up push-in fitting	
CD18	ø1.8 radial facing-down push-in fitting (applicable tube UP-9402-**)	
CD4	ø4 radial facing-down push-in fitting	
CD6	ø6 radial facing-down push-in fitting	
M5	M5	
Port	**4 (A)/2 (B) port**	**P/R1/R2 port**
C3N	ø1/8 inch push-in fitting	1/8NPT
C4N	ø5/32 inch push-in fitting	
CL3N	ø1/8 inch radial facing-up push-in fitting (*1)	
CL4N	ø5/32 inch radial facing-up push-in fitting (*1)	
M5N	M5	
Port	**4 (A)/2 (B) port**	**P/R1/R2 port**
C4G	ø4 push-in fitting	G1/8
C6G	ø6 push-in fitting	
CL4G	ø4 radial facing-up push-in fitting (*1)	
CL6G	ø6 radial facing-up push-in fitting (*1)	
M5G	M5	
Ⓑ Option		
Blank		
K	External pilot	
F	Built-in port A/B filter (*2)	
Ⓒ Mount		
Blank	Direct mount	
D	DIN rail mount (*3)	
Ⓓ Station No.		
2	2 stations	
to	to	
20	Refer to the specifications page for the max. station number.	

*1: This is a custom order product.
*2: P port is equipped with a filter as standard.
*3: The DIN rail kit should be arranged separately.

SCPD3
SCM
SSD2
MDC2
SMG
LCM
LCR
LCG
LCX
STM
STG
STR2
MRL2
GRC
Cylinder switch
MN3E MN4E
4GA/B
M4GA/B
MN4GA/B
F.R (module unit)
Clean F.R
Precision R
Press gauge Diff. press gauge
Electro-pneumatic R
Speed controller
Auxiliary valve
Fitting/ tube
Clean air unit
Pressure sensor
Flow rate sensor
Valve for air blow
Ending

Related parts

(6) Manifold sub-plate kit individual wiring

● M4GB2/M4GB3 sub-plate

M4GB2 R - CL4 - ( ) - 2 - P70

Ⓑ Port size

Ⓒ Option

Ⓓ Station No.

Code	Content	Ⓐ Model No. M4GB2	Ⓐ Model No. M4GB3
Ⓑ Port size			
Port	**4 (A)/2 (B) port**	**P/R1/R2 port (1)=Rc1/4 (2)=Rc3/8**	
C4	ø4 push-in fitting	(1)	
C6	ø6 push-in fitting	(1)	(2)
C8	ø8 push-in fitting	(1)	(2)
C10	ø10 push-in fitting (*1)	(1)	(2)
CL6	ø6 radial facing-up push-in fitting	(1)	
CL8	ø8 radial facing-up push-in fitting	(1)	(2)
CL10	ø10 radial facing-up push-in fitting		(2)
CD6	ø6 radial facing-down push-in fitting	(1)	
CD8	ø8 radial facing-down push-in fitting	(1)	(2)
CD10	ø10 radial facing-down push-in fitting		(2)
06	Rc1/8	(1)	
08	Rc1/4		(2)
Port	**4 (A)/2 (B) port**	**P/R1/R2 port (3)=1/4NPT (4)=3/8NPT**	
C6N	ø1/4 inch push-in fitting	(3)	
C8N	ø5/16 inch push-in fitting	(3)	(4)
C10N	ø3/8 inch push-in fitting		(4)
CL6N	ø1/4 inch radial facing-up push-in fitting (*1)	(3)	
CL8N	ø5/16 inch radial facing-up push-in fitting (*1)	(3)	
06N	1/8NPT	(3)	
08N	1/4NPT (*1)		(4)
Port	**4 (A)/2 (B) port**	**P/R1/R2 port (5)=G1/4 (6)=G3/8**	
C4G	ø4 push-in fitting	(5)	
C6G	ø6 push-in fitting	(5)	
C8G	ø8 push-in fitting	(5)	(6)
C10G	ø10 push-in fitting		(6)
CL6G	ø6 radial facing-up push-in fitting (*1)	(5)	
CL8G	ø8 radial facing-up push-in fitting (*1)	(5)	
06G	G1/8	(5)	
08G	G1/4		(6)

Ⓒ Option	
Blank	
K	External pilot
F	Built-in port A/B filter (*2)

Ⓓ Station No.	
2	2 stations
to	to
20	Refer to the specifications page for the max. station number.

*1: This is a custom order product.
*2: P port is equipped with a filter as standard.
*3: The direct mount type and DIN rail mount type are the same.
*4: The DIN rail kit needs to be prepared separately.

Related parts

(7) Manifold sub-plate kit reduced wiring

● M4GA sub-plate

M4GA1 R - 00 - ( ) - ( ) ( ) - 2 - P70

Ⓐ Model No.
Ⓑ Port size
Ⓒ Reduced wiring
Ⓓ Option
Ⓔ Mount
Ⓕ Station No.

Code	Content	
Ⓐ Model No.		
M4GA1	Metal base, 4G1 size, direct piping	
M4GA2	Metal base, 4G2 size, direct piping	
M4GA3	Metal base, 4G3 size, direct piping	
Ⓑ Port size		
00	M5/Rc	
00N	NPT	
00G	G thread	
Ⓒ Reduced wiring		
T10	Common terminal block (M3 thread)	left
T10R		right
T11	Common terminal block (clamping)	left
T11R		right
T30	D sub-connector	left
T30R		right
T50	20 pin flat cable connector (with power supply terminal)	left
T50R		right
T51	20 pin flat cable connector (without power supply terminal)	left
T51R		right
T52	10 pin flat cable connector (without power supply terminal)	left
T52R		right
T53	26 pin flat cable connector (without power supply terminal)	left
T53R		right
T56	20 pin flat cable connector (without power supply terminal) For serial transmission slave unit OPP3 connection	left
T81	For serial transmission slave unit OPP7 connection 16 points	left
T82	For serial transmission slave unit OPP7 connection 32 points	left
Ⓓ Option		
Blank		
K	External pilot	
Ⓔ Mount		**(*1)**
Blank	Direct mount	
D	DIN rail mount	(*2)
Ⓕ Station No.		
2	2 stations	
to	to	
20	Refer to the specifications page for the max. station number.	

*1: When T8 is used for M4GA2R and M4GA3R, mount should be specified.
*2: The DIN rail kit should be arranged separately.

Related parts

(7) Manifold sub-plate kit reduced wiring

● M4GB sub-plate

M4GB1 R - CL4 - T10 - ○ ○ - 2 - P70

Ⓐ Model No. Ⓑ Port size

Code	Content	Ⓐ Model No. M4GB1	M4GB2	M4GB3
Ⓐ Model No.				
M4GB1	Metal base 4G1 size base piping			
M4GB2	Metal base 4G2 size base piping			
M4GB3	Metal base 4G3 size base piping			
Ⓑ Port size				
Port	**4(A)/2(B)Port**	**P/R1/R2Port ①=Rc1/8 ②=Rc1/4 ③=Rc3/8**		
CF	ø1.8 barbed fitting (applicable tube UP-9102-**)	(1)		
C18	ø1.8 push-in fitting (applicable tube UP-9402-**)	(1)		
C4	ø4 push-in fitting	(1)	(2)	
C6	ø6 push-in fitting	(1)	(2)	(3)
C8	ø8 push-in fitting (*5)(*6)	(1)	(2)	(3)
C10	ø10 push-in fitting (*5)(*6)		(2)	(3)
CL18	ø1.8 radial facing-up push-in fitting (applicable tube UP-9402-**)	(1)		
CL4	ø4 radial facing-up push-in fitting	(1)		
CL6	ø6 radial facing-up push-in fitting	(1)	(2)	
CL8	ø8 radial facing-up push-in fitting		(2)	(3)
CL10	ø10 radial facing-up push-in fitting			(3)
CD18	ø1.8 radial facing-down push-in fitting (applicable tube UP-9402-**)	(1)		
CD4	ø4 radial facing-down push-in fitting	(1)		
CD6	ø6 radial facing-down push-in fitting	(1)	(2)	
CD8	ø8 radial facing-down push-in fitting		(2)	(3)
CD10	ø10 radial facing-down push-in fitting			(3)
M5	M5	(1)		
06	Rc1/8		(2)	
08	Rc1/4			(3)
Port	**4(A)/2(B)Port**	**P/R1/R2Port ④NPT=1/8 ⑤NPT=1/4 ⑥NPT=3/8**		
C3N	ø1/8" push-in fitting	(4)		
C4N	ø5/32" push-in fitting	(4)		
C6N	ø1/4" push-in fitting		(5)	
C8N	ø5/16" push-in fitting		(5)	(6)
C10N	ø3/8" push-in fitting			(6)
CL3N	Radial ø1/8" push-in fitting upward (*6)	(4)		
CL4N	Radial ø5/32" push-in fitting upward (*6)	(4)		
CL6N	Radial ø1/4" push-in fitting upward (*6)		(5)	
CL8N	Radial ø5/16" push-in fitting upward (*6)		(5)	
CXN	Push-in fitting mix	(4)	(5)	(6)
M5N	M5	(4)		
06N	NPT1/8		(5)	
08N	NPT1/4 *6			(6)
Port	**4(A)/2(B)Port**	**P/R1/R2Port ⑦=G1/8 ⑧=G1/4 ⑨=G3/8**		
C4G	ø4 push-in fitting	(7)	(8)	
C6G	ø6 push-in fitting	(7)	(8)	
C8G	ø8 push-in fitting		(8)	(9)
C10G	ø10 push-in fitting			(9)
CL4G	ø4 radial push-in fitting upward (*6)	(7)		
CL6G	ø6 radial push-in fitting upward (*6)	(7)	(8)	
CL8G	ø8 radial push-in fitting upward (*6)		(8)	
CXG	Push-in fitting mix	(7)	(8)	
M5G	M5	(7)		
06G	G1/8		(8)	
08G	G1/4			(9)

Ⓒ Reduced wiring

Ⓒ Reduced wiring		
T10	Common terminal block (M3 thread)	left
T10R		right
T11	Common terminal block (clamping)	left
T11R		right
T30	D sub-connector	left
T30R		right
T50	20 pin flat cable connector (with power supply terminal)	left
T50R		right
T51	20 pin flat cable connector (without power supply terminal)	left
T51R		right
T52	10 pin flat cable connector (without power supply terminal)	left
T52R		right
T53	26 pin flat cable connector (without power supply terminal)	left
T53R		right
T56	20 pin flat cable connector (without power supply terminal)For serial transmission slave unit OPP3 connection	left
T81	For serial transmission slave unit OPP7 connection (16-point output)	left
T82	For serial transmission slave unit OPP7 connection (32-point output)	left

Ⓓ Option

Ⓓ Option		
Blank	No option	
K	External pilot	
F	Built-in port A/B filter	(*1)

Ⓔ Mount

Ⓔ Mount		*2
Blank	Direct mount	
D	DIN rail mount	(*3)

Ⓕ Station No.

Ⓕ Station No.	
2	2 stations
to	to
20	Refer to the specifications page for the max. station number.

*1: P port is equipped with a filter as standard.
*2: When T8 is used for M4GB2R and M4GB3R, mount should be specified.
*3: The DIN rail kit should be arranged separately.

Related parts

(8) Coil assembly

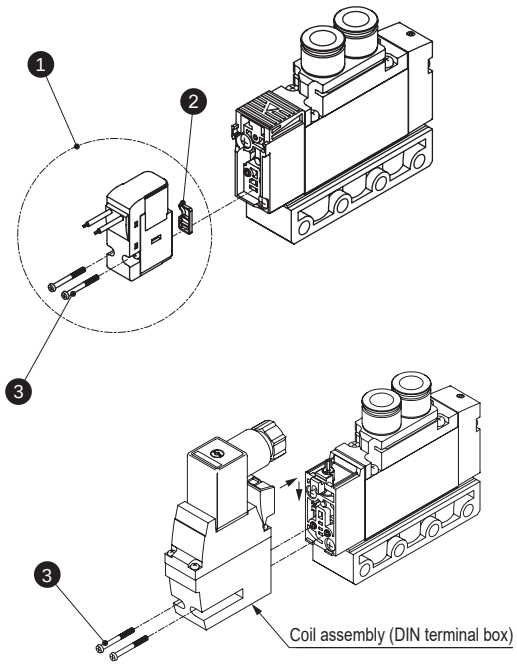

No.	Part name	Model No.
1	Coil assembly	4GR - electrical connections - □ - COIL - voltage -P70 Blank: Standard A: Ozone proof S: Surgeless *1 E: Low exoergic/energy circuit *1, *2 K: External pilot specifications E* : E type connector E*J : Socket with cover B* : DIN terminal box Blank: Grommet lead wire B includes the DIN terminal box

1: E2 type and E2*J type connectors support 12/24 VDC only.
In addition, surgeless “S” and low exoergic/energy circuit “E” cannot be selected together.
*2: Surgeless specifications.

(9) Lead wire related parts

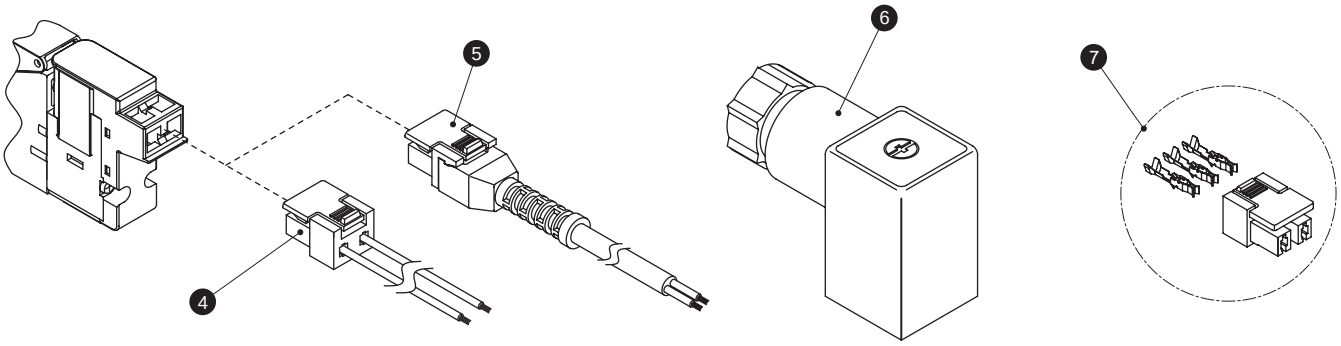

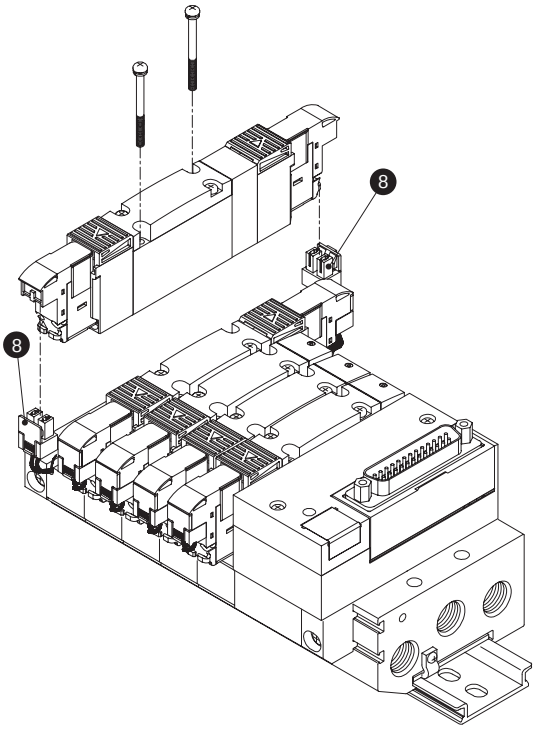

Socket assembly, DIN terminal box assembly

No.	Part name	Model No.
4	E type connector socket assembly	4GR-SOCKET-ASSY-E**- Voltage -P70
5	Socket assembly with cover	4GR-SOCKET-ASSY-E**J-P70
6	DIN terminal box assembly	4GR-TERMINAL-BOX- Voltage -P70

Socket set

No.	Part model No.
7	4GR-SOCKET-SET-P70

A type connector socket assembly

No.	Part model No.
8	4G[*1]R-SOCKET-ASSY-A[*2][*3]-[*4]-P70

*1 Series flow rate size
*2 Blank: Left side, R: Right side
*3 A: aSOL side, B: bSOL side
*4 Row No.
Note: Refer to “Selection of model No. of socket assembly for expansion” (page 737) for selection.

MEMO

M4GA1 to 3/M4GB1 to 3 Series

How to fill out metal base M4G series manifold specifications sheet

● Manifold model No. (example)

M [4] G (A/B) 1 [8] 0R- [CX] - [T30] [ ] - [9] - [3] - [P70]

Solenoid valves | Solenoid position | Port size | Electrical connections | Terminal connector pin array | Station No. | Voltage | Clean-room specifications

Precautions for fitting mix CX

The A/B port fitting can be selected freely by indicating "CX" in the port size area.

Selectable cartridge fittings	
4G1	CF, C18, C4, C6, C8, X (plug)
4G2	C4, C6, C8, C10, X (plug)
4G3	C6, C8, C10, X (plug)

* A/B port fitting mix with the body piping is not supported. 4G1 C8 and 4G2 C10 base piping are custom orders. Fitting mix CX supports only the combinations of C8 and X (plug) for 4G1 and C10 and X (plug) for 4G2.

Solenoid valve model No.	Fitting CX A	Fitting CX B	1	2	3	4	5	6	7	8	9	10	11	12	13	14	15	16	17	18	19	20	21	22	23	24	Quantity
4G B 1 1 9R- CX	C6	X	○	○																							2
4G B 1 1 9R- C6					○	○																					2
4G B 1 2 9R- C6							○	○																			2
4G B 1 5 9R- CX	C6	C4							○	○																	2
4G 1 9R-																											
3G A 1 9R-																											
3G A 1 9R-																											
Masking plate 4G1R-MP(S)																											
Masking plate 4G1R-MP(D)											○																1

Installation position

Indicate X for a plug

Fill in "CX" when changing the fitting combination

Mounting rail		Accessory	Blanking plug				Thread plug	
	L_2=		PG-P2-B		GWP4-B		4G1R-M5P	
	* Write an integer multiple of 12.5.		GWP6-B		GWP8-B			
			Cable with D sub-	4GR-CABLE-D0□-□		Push-in fitting tube remover (attached as standard) □✓Not required (check the box)		

Place a check here if the tube remover (standard attached product) is not required.

M4GB1*OR-C8 does not come with a removal tool.

* A reference circuit diagram for the above manifold (example) is shown on the next page.

From the manifold specifications sheets for each model, select and fill out the appropriate form.

● Individual wiring...M4G1 A/B (page 609), M4G2 A/B (page 610), M4G3 A/B (page 611)

● Reduced wiring

- Common terminal block (T1*), D sub-connector (T30): M4G A/B 1(page 612), M4G A/B 2(page 613), M4G A/B 3(page 614)
- Flat cable connector (T5*): M4G A/B 1(page 615), M4G A/B 2(page 616), M4G A/B 3(page 617)
- Serial transmission (T6G1): M4G A/B 1(page 618), M4G A/B 2(page 619), M4G A/B 3(page 620)
- Serial transmission (T8*): M4G A/B 1(page 621), M4G A/B 2(page 622), M4G A/B 3(page 623)

How to use base piping M4GB*10 as a 3-port valve

This can be used as the NO/NC by attaching a plug cartridge on one side of the A/B port.
Indicate "X" in the fitting CX column.

Switching method	Plug mounting port
NC (Normally closed)	B
NO (Normally open)	A

For female thread specifications, indicate the required number of plugs in the "Thread plug" area at the end.
Female threads and cartridge fitting cannot be used together in one manifold set.

*1: Select the silencer mounting after confirming the dimensions.
*2: Use SLW-8S for the M4GA2 DIN rail mount. Interference occurs if SLW-8A is used.

Elbow specifications

●The push-in L fitting (upward) is used only for the single solenoid manifold. Port A is a long elbow and port B a short elbow.
●A/B port sizes do not differ for elbow specifications.

M4GA1 to 3/M4GB1 to 3 Series

How to fill out wiring specifications sheet

This is not required for standard wiring and double wiring.

● Wiring specifications (example)

Complete these specifications when specifying the wiring order and additional cables.

Connector pin No.		Mounting position																
T30/T30R	T50/T50R/T6*	1	2	3	4	5	6	7	8	9	10	11	12	13	14	15	16	17
1	1	a																
14	2		a															
2	3			a														
15	4																	
3	5				a													
16	6																	
4	7					a												
17	8					b												
5	9 - power supply						a											
18	10 + (COM) power supply						b											
6	11							a										
19	12							b										
7	13								a									
20	14								b									
8	15									(a)								
21	16									(b)								
9	17																	
22	18																	
10	19 - power supply																	
23	20 + (COM) power supply																	
11																		
24																		
12																		
25																		
13 (COM)																		

Auxiliary cable wiring
Caution (1)

* When T50 wiring is used, the COM polarity is + (plus).
* When T50 wiring is used, connector pin No. 9, 10, 19, and 20 cannot be specified because they are used for the external input power supply.
* Wiring is sequential from connector pin No. 1 in standard wiring. Contact CKD for the special wiring order.

Cautions for auxiliary wiring

(1) Reserved wire(s) is/are provided on the masking plate for the reduced wiring manifold. (Refer to page 596)
The number of auxiliary wires can be specified by selecting the masking plate in specifications.
4G*R - MP (S)...1
4G*R - MP (D)...2
Indicate (a) or (b) in manifold specifications for masking plate reserved wires.

References circuit diagram The simplified circuit diagram of the manifold model No. (example) on the previous page is shown below.

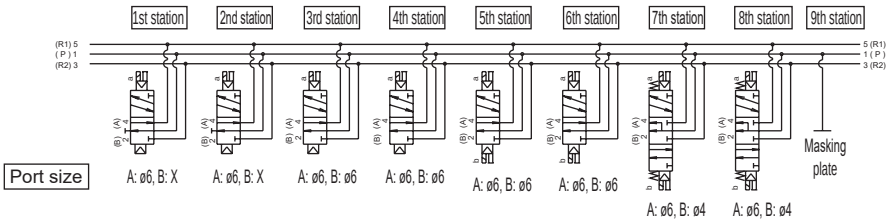

* Manifold stations are set in order from the left with the piping port facing toward you.

M4G$^{A}_{B}$1 manifold specifications

Issue date / /

Company

Contact

Purchase order No.

● Contact ● Quantity set(s) ● Request date /

Slip No.	Order No.

● Manifold model No.

M [ ] G$^{A}_{B}$1 [ ] 0R- [ ] - [ ] [ ] [ ] - [ ] - [ ] - [ ]

Type of solenoid valve / Solenoid position / Port size / Electrical connections / Other options / Mount / Station No. / Voltage / Clean room specs

Solenoid valve model No.	Fitting CX A	Fitting CX B	Valve mounting position 1	2	3	4	5	6	7	8	9	10	11	12	13	14	15	16	17	18	19	20	21	22	23	24	Qty.
4G [ ] 1 [ ] 9R- [ ] - [ ]																											
4G [ ] 1 [ ] 9R- [ ] - [ ]																											
4G [ ] 1 [ ] 9R- [ ] - [ ]																											
4G [ ] 1 [ ] 9R- [ ] - [ ]																											
4G [ ] 1 [ ] 9R- [ ] - [ ]																											
3G [ ] 1 [ ] 9R- [ ] - [ ]																											
3G [ ] 1 [ ] 9R- [ ] - [ ]																											
Masking plate 4G1R-MP- [ ]																											
Air supply spacer 4G1R-P- [ ]																											
Exhaust spacer 4G1R-R- [ ]																											

Mounting rail		Accessories	Blanking plug								Threaded plug	
	L_2 = [ ] * Write an integer multiple of 12.5.		PG-P2-B		GWP4-B		GWP6-B		GWP8-B		4G1R-M5P	
			Push-in fitting tube remover (standard) Not required (check)									

* C8 of M4GB1 is not provided with an extractor.

M4G2 individual wiring

M4G$^{A}_{B}$2 manifold specifications

Issue date / /

Company

Contact

Purchase order No.

● Contact ● Quantity set(s) ● Request date /

Slip No.	Order No.

● Manifold model No.

M ☐ G$^{A}_{B}$2 ☐ 0R- ☐ - ☐ ☐ ☐ - ☐ - ☐ - ☐

Type of solenoid valve | Solenoid position | Port size | Electrical connections | Other options | Mount | Station No. | Voltage | Clean room specs

Solenoid valve model No.	Fitting CX A	Fitting CX B	Valve mounting position 1	2	3	4	5	6	7	8	9	10	11	12	13	14	15	16	17	18	19	20	21	22	23	24	Qty.
4G ☐ 2 ☐ 9R- ☐ - ☐																											
4G ☐ 2 ☐ 9R- ☐ - ☐																											
4G ☐ 2 ☐ 9R- ☐ - ☐																											
4G ☐ 2 ☐ 9R- ☐ - ☐																											
4G ☐ 2 ☐ 9R- ☐ - ☐																											
3G ☐ 2 ☐ 9R- ☐ - ☐																											
3G ☐ 2 ☐ 9R- ☐ - ☐																											
Masking plate 4G2R-MP- ☐																											
Air supply spacer 4G2R-P- ☐																											
Exhaust spacer 4G2R-R																											

Mounting rail	L_2 = ☐ * Write an integer multiple of 12.5.	Accessories	Blanking plug								Threaded plug	
			GWP4-B		GWP6-B		GWP8-B		GWP10-B		4G2R-06P	

* Applicable only when B-type is selected.

M4G3 individual wiring

M4G$^{A}_{B}$3 manifold specifications

Issue date / /

Company

Contact

Purchase order No.

● Contact ● Quantity set(s) ● Request date /

Slip No.	Order No.

● Manifold model No.

M [ ] G$^{A}_{B}$3 [ ] 0R - [ ] - [ ] [ ] [ ] - [ ] - [ ] - [ ]

Type of solenoid valve / Solenoid position / Port size / Electrical connections / Other options / Mount / Station No. / Voltage / Clean room specifications

Solenoid valve model No.	Fitting CX A	Fitting CX B	Valve mounting position 1	2	3	4	5	6	7	8	9	10	11	12	13	14	15	16	17	18	19	20	21	22	23	24	Qty.
4G [ ] 3 [ ] 9R- [ ]																											
4G [ ] 3 [ ] 9R- [ ]																											
4G [ ] 3 [ ] 9R- [ ]																											
4G [ ] 3 [ ] 9R- [ ]																											
4G [ ] 3 [ ] 9R- [ ]																											
3GA3 [ ] 9R- [ ]																											
3GA3 [ ] 9R- [ ]																											
Masking plate 4G3R-MP- [ ]																											
Air supply spacer 4G3R-P- [ ]																											
Exhaust spacer 4G3R-R- [ ]																											

Mounting rail	L_2 = [ ] * Write an integer multiple of 12.5.	Accessories	Blanking plug						Threaded plug	
			GWP6-B		GWP8-B		GWP10-B		4G3R-08P	

M4G1 reduced wiring

M4G$^{A}_{B}$1-T1/3 manifold specifications

Issue date / /
Company
Contact
Purchase order No.

● Contact ● Quantity set(s) ● Request date /

Slip No.	Order No.

● Manifold model No.

M [ ] G$^{A}_{B}$1 [ ] 0R- [ ] - [ ] [ ] [ ] [ ] - [ ] - [ ] - [ ]

Type of solenoid valve | Solenoid position | Port size | Reduced wiring | Terminal connector pin layout | Option | Mount | Station No. | Voltage | Clean room specifications

Solenoid valve model No.	Fitting CX A	Fitting CX B	Valve mounting position 1	2	3	4	5	6	7	8	9	10	11	12	13	14	15	16	17	18	19	20	21	22	23	24	Qty.
4G [ ] 1 [ ] 9R- [ ] - [ ]																											
4G [ ] 1 [ ] 9R- [ ] - [ ]																											
4G [ ] 1 [ ] 9R- [ ] - [ ]																											
4G [ ] 1 [ ] 9R- [ ] - [ ]																											
4G [ ] 1 [ ] 9R- [ ] - [ ]																											
3G [ ] 1 [ ] 9R- [ ] - [ ]																											
3G [ ] 1 [ ] 9R- [ ] - [ ]																											
Masking plate 4G1R-MP (S) - [ ]																											
Masking plate 4G1R-MP (D) - [ ]																											
Air supply spacer 4G1R-P- [ ]																											
Exhaust spacer 4G1R-R- [ ]																											

Mounting rail	L_2= [ ] * Write an integer multiple of 12.5.	Accessories	Blanking plug								Threaded plug	
			PG-P2-B		GWP4-B		GWP6-B		GWP8-B		4G1R-M5P	
			Cable with D sub-connector		4GR-CABLE-D0□-□		Push-in fitting tube remover (standard)				Not required (check)	

* C8 of M4GB1 is not provided with an extractor.

● Wiring specification (Not required for standard wiring and double wiring. Complete these specifications when specifying the wiring order and additional cables)

Connector pin No. T10/T10R	T11/T11R	T30/T30R	Mounting position 1	2	3	4	5	6	7	8	9	10	11	12	13	14	15	16	17	18	19	20	21	22	23	24
1	1	1																								
2	2	14																								
3	3	2																								
4	4	15																								
5	5	3																								
6	6	16																								
7	7	4																								
8	8	17																								
9	9	5																								
10	10	18																								
11	11	6																								
12	12	19																								
13	13	7																								
14	14	20																								
15	15	8																								
16	16	21																								
COM	17	9																								
COM	18	22																								
	19	10																								
	20	23																								
	21	11																								
	22	24																								
	23	12																								
	24	25																								
	COM	13 (COM)																								
	COM																									

M4G2 reduced wiring

M4G$^{A}_{B}$2-T1/3 manifold specifications

Issue date / /

Company

Contact

Purchase order No.

● Contact ● Quantity set(s) ● Request date /

Slip No.	Order No.

● Manifold model No.

M ☐ G$^{A}_{B}$2 ☐ 0R- ☐ - ☐ ☐ ☐ ☐ - ☐ - ☐ - ☐

Type of solenoid valve | Solenoid position | Port size | Reduced wiring | Terminal connector pin layout | Option | Mount | Station No. | Voltage | Clean room specifications

Solenoid valve model No.	Fitting CX A	Fitting CX B	Valve mounting position 1	2	3	4	5	6	7	8	9	10	11	12	13	14	15	16	17	18	19	20	21	22	23	24	Qty.
4G ☐ 2 ☐ 9R- ☐ - ☐																											
4G ☐ 2 ☐ 9R- ☐ - ☐																											
4G ☐ 2 ☐ 9R- ☐ - ☐																											
4G ☐ 2 ☐ 9R- ☐ - ☐																											
4G ☐ 2 ☐ 9R- ☐ - ☐																											
3G ☐ 2 ☐ 9R- ☐ - ☐																											
3G ☐ 2 ☐ 9R- ☐ - ☐																											
Masking plate 4G2R-MP (S) - ☐																											
Masking plate 4G2R-MP (D) - ☐																											
Air supply spacer 4G2R-P- ☐																											
Exhaust spacer 4G2R-R- ☐																											

Mounting rail	L_2= ☐ * Write an integer multiple of 12.5.	Accessories	Blanking plug								Threaded plug	
			GWP4-B		GWP6-B		GWP8-B		GWP10-B		4G2R-06P	
			Cable with D sub-connector		4GR-CABLE-D0☐-☐							

* Applicable only when B-type is selected.

● Wiring specification (Not required for standard wiring and double wiring. Complete these specifications when specifying the wiring order and additional cables)

Connector pin No. T10/T10R	T11/T11R	T30/T30R	Mounting position 1	2	3	4	5	6	7	8	9	10	11	12	13	14	15	16	17	18	19	20	21	22	23	24
1	1	1																								
2	2	14																								
3	3	2																								
4	4	15																								
5	5	3																								
6	6	16																								
7	7	4																								
8	8	17																								
9	9	5																								
10	10	18																								
11	11	6																								
12	12	19																								
13	13	7																								
14	14	20																								
15	15	8																								
16	16	21																								
COM	17	9																								
COM	18	22																								
	19	10																								
	20	23																								
	21	11																								
	22	24																								
	23	12																								
	24	25																								
	COM	13 (COM)																								
	COM																									

M4G3 reduced wiring

M4G$^{A}_{B}$3-T1/3 manifold specifications

Issue date / /
Company
Contact
Purchase order No.

● Contact ● Quantity set(s) ● Request date /

Slip No.	Order No.

● Manifold model No.

M [ ] G$^{A}_{B}$3 [ ] 0R- [ ] - [ ] [ ] [ ] [ ] - [ ] - [ ] - [ ]

Type of solenoid valve | Solenoid position | Port size | Reduced wiring | Terminal connector pin layout | Option | Mount | Station No. | Voltage | Clean room specifications

Solenoid valve model No.	Fitting CX A	Fitting CX B	1	2	3	4	5	6	7	8	9	10	11	12	13	14	15	16	17	18	19	20	21	22	23	24	Qty.
4G [ ] 3 [ ] 9R- [ ]																											
4G [ ] 3 [ ] 9R- [ ]																											
4G [ ] 3 [ ] 9R- [ ]																											
4G [ ] 3 [ ] 9R- [ ]																											
4G [ ] 3 [ ] 9R- [ ]																											
3GA3 [ ] 9R- [ ]																											
3GA3 [ ] 9R- [ ]																											
Masking plate 4G3R-MP (S) - [ ]																											
Masking plate 4G3R-MP (D) - [ ]																											
Air supply spacer 4G3R-P- [ ]																											
Exhaust spacer 4G3R-R- [ ]																											

Valve mounting position

Mounting rail	L_2= [ ] * Write an integer multiple of 12.5.

Accessories	Blanking plug						Threaded plug	
	GWP6-B		GWP8-B		GWP10-B		4G3R-08P	
	Cable with D sub-connector		4GR-CABLE-D0□-□					

● Wiring specification (Not required for standard wiring and double wiring. Complete these specifications when specifying the wiring order and additional cables)

Connector pin No. T10/T10R	T11/T11R	T30/T30R	Mounting position 1	2	3	4	5	6	7	8	9	10	11	12	13	14	15	16	17	18	19	20	21	22	23	24
1	1	1																								
2	2	14																								
3	3	2																								
4	4	15																								
5	5	3																								
6	6	16																								
7	7	4																								
8	8	17																								
9	9	5																								
10	10	18																								
11	11	6																								
12	12	19																								
13	13	7																								
14	14	20																								
15	15	8																								
16	16	21																								
COM	17	9																								
COM	18	22																								
	19	10																								
	20	23																								
	21	11																								
	22	24																								
	23	12																								
	24	25																								
	COM	13 (COM)																								
	COM																									

M4G1 reduced wiring

M4G$^{A}_{B}$1-T5 manifold specifications

Issue date / /

Company

Contact

Purchase order No.

● Contact ● Quantity set(s) ● Request date /

Slip No.	Order No.

● Manifold model No.

M [ ] G$^{A}_{B}$1 [ ] 0R- [ ] - [ ] [ ] [ ] [ ] - [ ] - [ ] - [ ]

Type of solenoid valve | Solenoid position | Port size | Reduced wiring | Terminal connector pin layout | Option | Mount | Station No. | Voltage | Clean room specifications

Solenoid valve model No.	Fitting CX A	Fitting CX B	Valve mounting position 1	2	3	4	5	6	7	8	9	10	11	12	13	14	15	16	17	18	19	20	21	22	23	24	Qty.
4G [ ] 1 [ ] 9R- [ ] - [ ]																											
4G [ ] 1 [ ] 9R- [ ] - [ ]																											
4G [ ] 1 [ ] 9R- [ ] - [ ]																											
4G [ ] 1 [ ] 9R- [ ] - [ ]																											
4G [ ] 1 [ ] 9R- [ ] - [ ]																											
3G [ ] 1 [ ] 9R- [ ] - [ ]																											
3G [ ] 1 [ ] 9R- [ ] - [ ]																											
Masking plate 4G1R-MP (S) - [ ]																											
Masking plate 4G1R-MP (D) - [ ]																											
Air supply spacer 4G1R-P- [ ]																											
Exhaust spacer 4G1R-R- [ ]																											

Mounting rail	Accessories	Blanking plug								Threaded plug	
L2= [ ] * Write an integer multiple of 12.5.		PG-P2-B		GWP4-B		GWP6-B		GWP8-B		4G1R-M5P	
		Push-in fitting tube remover (standard) ☐Not required (check)									

* C8 of M4GB1 is not provided with an extractor.

● Wiring specification (Not required for standard wiring and double wiring. Complete these specifications when specifying the wiring order and additional cables)

Connector pin No. T50/T50R	T51/T51R	T52/T52R	T53/T53R	Mounting position 1	2	3	4	5	6	7	8	9	10	11	12	13	14	15	16	17	18	19	20	21	22	23	24
1	1	1	1																								
2	2	2	2																								
3	3	3	3																								
4	4	4	4																								
5	5	5	5																								
6	6	6	6																								
7	7	7	7																								
8	8	8	8																								
9 - power supply	9	9 COM	9																								
10 + (COM) power supply	10	10 COM	10																								
11	11		11																								
12	12		12																								
13	13		13																								
14	14		14																								
15	15		15																								
16	16		16																								
17	17		17																								
18	18		18																								
19 - power supply	19 COM		19																								
20 + (COM) power supply	20 COM		20																								
			21																								
			22																								
			23																								
			24																								
			25 COM																								
			26 COM																								

* When T50 wiring is used, the COM polarity is + (positive).
* When T50 wiring is used, connector pin No. 9, 10, 19, and 20 cannot be specified because they are used for the external input power supply.

M4G2 reduced wiring

M4G$^{A}_{B}$2-T5 manifold specifications

Issue date / /
Company
Contact
Purchase order No.

● Contact ● Quantity set(s) ● Request date /

Slip No.	Order No.

● Manifold model No.

M [ ] G$^{A}_{B}$2 [ ] 0R- [ ] - [ ] [ ] [ ] [ ] - [ ] - [ ] - [ ]

Type of solenoid valve | Solenoid position | Port size | Reduced wiring | Terminal connector pin layout | Option | Mount | Station No. | Voltage | Clean room specifications

Solenoid valve model No.	Fitting CX A	Fitting CX B	Valve mounting position 1	2	3	4	5	6	7	8	9	10	11	12	13	14	15	16	17	18	19	20	21	22	23	24	Qty.
4G [ ] 2 [ ] 9R- [ ] - [ ]																											
4G [ ] 2 [ ] 9R- [ ] - [ ]																											
4G [ ] 2 [ ] 9R- [ ] - [ ]																											
4G [ ] 2 [ ] 9R- [ ] - [ ]																											
4G [ ] 2 [ ] 9R- [ ] - [ ]																											
3G [ ] 2 [ ] 9R- [ ] - [ ]																											
3G [ ] 2 [ ] 9R- [ ] - [ ]																											
Masking plate 4G2R-MP (S) - [ ]																											
Masking plate 4G2R-MP (D) - [ ]																											
Air supply spacer 4G2R-P- [ ]																											
Exhaust spacer 4G2R-R- [ ]																											

Mounting rail	L_2 = [ ] * Write an integer multiple of 12.5.	Accessories	Blanking plug								Threaded plug	
			GWP4-B		GWP6-B		GWP8-B		GWP10-B		4G2R-06P	

* C8 of M4GB1 is not provided with an extractor.

● Wiring specification (Not required for standard wiring and double wiring. Complete these specifications when specifying the wiring order and additional cables)

Connector pin No. T50/T50R	T51/T51R	T52/T52R	T53/T53R	Mounting position 1	2	3	4	5	6	7	8	9	10	11	12	13	14	15	16	17	18	19	20	21	22	23	24
1	1	1	1																								
2	2	2	2																								
3	3	3	3																								
4	4	4	4																								
5	5	5	5																								
6	6	6	6																								
7	7	7	7																								
8	8	8	8																								
9 - power supply	9	9 COM	9																								
10 + (COM) power supply	10	10 COM	10																								
11	11		11																								
12	12		12																								
13	13		13																								
14	14		14																								
15	15		15																								
16	16		16																								
17	17		17																								
18	18		18																								
19 - power supply	19 COM		19																								
20 + (COM) power supply	20 COM		20																								
			21																								
			22																								
			23																								
			24																								
			25 COM																								
			26 COM																								

* When T50 wiring is used, the COM polarity is + (positive).
* When T50 wiring is used, connector pin No. 9, 10, 19, and 20 cannot be specified because they are used for the external input power supply.

M4G3 reduced wiring

M4G$^{A}_{B}$3-T5 manifold specifications

Issue date / /

Company

Contact

Purchase order No.

● Contact ● Quantity set(s) ● Request date /

Slip No.	Order No.

● Manifold model No.

M [ ] G$^{A}_{B}$3 [ ] 0R- [ ] - [ ] [ ] [ ] [ ] - [ ] - [ ] - [ ]

Type of solenoid valve / Solenoid position / Port size / Reduced wiring / Terminal connector pin layout / Option / Mount / Station No. / Voltage / Clean room specifications

Solenoid valve model No.	Fitting CX A	Fitting CX B	Valve mounting position 1	2	3	4	5	6	7	8	9	10	11	12	13	14	15	16	17	18	19	20	21	22	23	24	Qty.
4G [ ] 3 [ ] 9R- [ ]																											
4G [ ] 3 [ ] 9R- [ ]																											
4G [ ] 3 [ ] 9R- [ ]																											
4G [ ] 3 [ ] 9R- [ ]																											
4G [ ] 3 [ ] 9R- [ ]																											
3GA3 [ ] 9R- [ ]																											
3GA3 [ ] 9R- [ ]																											
Masking plate 4G3R-MP (S) - [ ]																											
Masking plate 4G3R-MP (D) - [ ]																											
Air supply spacer 4G3R-P- [ ]																											
Exhaust spacer 4G3R-R- [ ]																											

Mounting rail	L_2 = [ ] * Write an integer multiple of 12.5.	Accessories	Blanking plug						Threaded plug	
			GWP6-B		GWP8-B		GWP10-B		4G3R-08P	

● Wiring specification (Not required for standard wiring and double wiring. Complete these specifications when specifying the wiring order and additional cables)

Connector pin No. T50/T50R	T51/T51R	T52/T52R	T53/T53R	Mounting position 1	2	3	4	5	6	7	8	9	10	11	12	13	14	15	16	17	18	19	20	21	22	23	24
1	1	1	1																								
2	2	2	2																								
3	3	3	3																								
4	4	4	4																								
5	5	5	5																								
6	6	6	6																								
7	7	7	7																								
8	8	8	8																								
9 - power supply	9	9 COM	9																								
10 + (COM) power supply	10	10 COM	10																								
11	11		11																								
12	12		12																								
13	13		13																								
14	14		14																								
15	15		15																								
16	16		16																								
17	17		17																								
18	18		18																								
19 - power supply	19 COM		19																								
20 + (COM) power supply	20 COM		20																								
			21																								
			22																								
			23																								
			24																								
			25 COM																								
			26 COM																								

* When T50 wiring is used, the COM polarity is + (positive).
* When T50 wiring is used, connector pin No. 9, 10, 19, and 20 cannot be specified because they are used for the external input power supply.

M4G1 serial transmission

M4G$^{A}_{B}$1-T6G1 Manifold specifications sheet

Issued / /
Company
Contact
Order No.

● Contact ● Quantity set(s) ● Delivery date /

Slip No.	Order No.

● Manifold model No.

M [ ] G$^{A}_{B}$1 [ ] 0R- [ ] - T6G1 [ ] [ ] D - [ ] - 3 - [ ]

Type of solenoid valve / Solenoid position / Port size / Serial transmission / Terminal connector pin layout / Option / Station No. / Voltage / Clean room specifications

Solenoid valve model No.	Fitting CX A	Fitting CX B	Valve mounting position 1	2	3	4	5	6	7	8	9	10	11	12	13	14	15	16	Qty.
4G [ ] 1 [ ] 9R- [ ] - [ ]																			
4G [ ] 1 [ ] 9R- [ ] - [ ]																			
4G [ ] 1 [ ] 9R- [ ] - [ ]																			
4G [ ] 1 [ ] 9R- [ ] - [ ]																			
4G [ ] 1 [ ] 9R- [ ] - [ ]																			
3G [ ] 1 [ ] 9R- [ ] - [ ]																			
3G [ ] 1 [ ] 9R- [ ] - [ ]																			
Masking plate 4G1R-MP (S) - [ ]																			
Masking plate 4G1R-MP (D) - [ ]																			
Air supply spacer 4G1R-P- [ ]																			
Exhaust spacer 4G1R-R- [ ]																			

Mounting rail	Accessories							
L2= [ ] * Write an integer multiple of 12.5.	Blanking plug						Threaded plug	
	PG-P2-B		GWP4-B		GWP6-B		GWP8-B		4G1R-M5P	
	Push-in fitting tube remover (standard)	☐Not required (check)						

* C8 of M4GB1 is not provided with an extractor.

● Wiring specifications sheet (Not required for standard wiring/double wiring. Complete these specifications when specifying the wiring order and additional cables)

Connector pin No.		Installation position 1	2	3	4	5	6	7	8	9	10	11	12	13	14	15	16
T6G1																	
T6G1: CC-Link 16 points	1																
	2																
	3																
	4																
	5																
	6																
	7																
	8																
	9																
	10 COM																
	11																
	12																
	13																
	14																
	15																
	16																
	17																
	18																
	19																
	20 COM																

M4G2 serial transmission

M4G$^{A}_{B}$2-T6G1 Manifold specifications sheet

Issued / /
Company
Contact
Order No.

● Contact ● Quantity set(s) ● Delivery date /

Slip No.	Order No.

● Manifold model No.

M [ ] G $^{A}_{B}$ 2 [ ] 0R- [ ] - T6G1 [ ] [ ] D- [ ] - 3 - [ ]

Solenoid valve | Solenoid position | Port size | Serial transmission | Terminal/connector pin array | Option | Station No. | Voltage | Clean room specifications

Solenoid valve model No.	Fitting CX A	Fitting CX B	Valve mounting position 1	2	3	4	5	6	7	8	9	10	11	12	13	14	15	16	Qty.
4G [ ] 2 [ ] 9R- [ ] - [ ]																			
4G [ ] 2 [ ] 9R- [ ] - [ ]																			
4G [ ] 2 [ ] 9R- [ ] - [ ]																			
4G [ ] 2 [ ] 9R- [ ] - [ ]																			
4G [ ] 2 [ ] 9R- [ ] - [ ]																			
3G [ ] 2 [ ] 9R- [ ] - [ ]																			
3G [ ] 2 [ ] 9R- [ ] - [ ]																			
Masking plate 4G2R-MP (S) - [ ]																			
Masking plate 4G2R-MP (D) - [ ]																			
Air supply spacer 4G2R-P- [ ]																			
Exhaust spacer 4G2R-R- [ ]																			

Mounting rail	L2 = [ ] * Write an integer multiple of 12.5.	Accessories	Blanking plug								Threaded plug	
			GWP4-B		GWP6-B		GWP8-B		GWP10-B		4G2R-06P	

● Wiring specifications sheet (Not required for standard wiring/double wiring. Complete these specifications when specifying the wiring order and additional cables)

Connector pin No.		Installation position 1	2	3	4	5	6	7	8	9	10	11	12	13	14	15	16
T6G1																	
T6G1: CC-Link 16 points	1																
	2																
	3																
	4																
	5																
	6																
	7																
	8																
	9																
	10 COM																
	11																
	12																
	13																
	14																
	15																
	16																
	17																
	18																
	19																
	20 COM																

M4G3 serial transmission

M4G$^{A}_{B}$3-T6G1 Manifold specifications sheet

Issued / /
Company
Contact
Order No.

● Contact ● Quantity set(s) ● Delivery date /

Slip No.	Order No.

● Manifold model No.

M [ ] G$^{A}_{B}$3 [ ] 0R- [ ] - T6G1 [ ] [ ] D - [ ] - 3 - [ ]

Type of solenoid valve | Solenoid position | Port size | Serial transmission | Terminal connector pin layout | Option | Station No. | Voltage | Clean room specifications

Solenoid valve model No.	Fitting CX A	Fitting CX B	1	2	3	4	5	6	7	8	9	10	11	12	13	14	15	16	Qty.
4G [ ] 3 [ ] 9R- [ ]																			
4G [ ] 3 [ ] 9R- [ ]																			
4G [ ] 3 [ ] 9R- [ ]																			
4G [ ] 3 [ ] 9R- [ ]																			
4G [ ] 3 [ ] 9R- [ ]																			
3GA3 [ ] 9R- [ ]																			
3GA3 [ ] 9R- [ ]																			
Masking plate 4G3R-MP (S) - [ ]																			
Masking plate 4G3R-MP (D) - [ ]																			
Air supply spacer 4G3R-P- [ ]																			
Exhaust spacer 4G3R-R- [ ]																			

Valve mounting position

Mounting rail	L_2= [ ] * Write an integer multiple of 12.5.

Accessories	Blanking plug						Threaded plug	
	GWP6-B		GWP8-B		GWP10-B		4G3R-08P	

● Wiring specification (Not required for standard wiring and double wiring. Complete these specifications when specifying the wiring order and additional cables)

Connector pin No. T6*		Mounting position 1	2	3	4	5	6	7	8	9	10	11	12	13	14	15	16
T6G1: CC-Link 16 points	1																
	2																
	3																
	4																
	5																
	6																
	7																
	8																
	9																
	10 COM																
	11																
	12																
	13																
	14																
	15																
	16																
	17																
	18																
	19																
	20 COM																

M4G1 serial transmission thin

M4G$^{A}_{B}$1-T8 manifold specifications

Issue date / /

Company

Contact

Purchase order No.

● Contact ● Quantity set(s) ● Request date /

Slip No.	Order No.

● Manifold model No.

M ☐ G$^{A}_{B}$1 ☐ 0R- ☐ - ☐ ☐ ☐ ☐ - ☐ - 3 - ☐

Type of solenoid valve / Solenoid position / Port size / Serial transmission / Terminal connector pin layout / Option / Mount / Station No. / Voltage / Clean room specifications

Solenoid valve model No.	Fitting CX A	Fitting CX B	Valve mounting position 1	2	3	4	5	6	7	8	9	10	11	12	13	14	15	16	17	18	19	20	Qty.
4G ☐ 1 ☐ 9R- ☐ - ☐																							
4G ☐ 1 ☐ 9R- ☐ - ☐																							
4G ☐ 1 ☐ 9R- ☐ - ☐																							
4G ☐ 1 ☐ 9R- ☐ - ☐																							
4G ☐ 1 ☐ 9R- ☐ - ☐																							
3G ☐ 1 ☐ 9R- ☐ - ☐																							
3G ☐ 1 ☐ 9R- ☐ - ☐																							
Masking plate 4G1R-MP(S)- ☐																							
Masking plate 4G1R-MP(D)- ☐																							
Air supply spacer 4G1R-P- ☐																							
Exhaust spacer 4G1R-R- ☐																							

Mounting rail	Accessories	Blanking plug								Threaded plug	
L_2= ☐ * Write an integer multiple of 12.5.		PG-P2-B		GWP4-B		GWP6-B		GWP8-B		4G1R-M5P	
		Push-in fitting tube remover (standard) ☐Not required (check)									

* C8 of M4GB1 is not provided with an extractor.

● Wiring specification (Not required for standard wiring and double wiring. Complete these specifications when specifying the wiring order and additional cables)

Connector pin No. T8*				Mounting position 1	2	3	4	5	6	7	8	9	10	11	12	13	14	15	16	17	18	19	20
T8G1	CC-Link	NPN	16points																				
T8G2			32points																				
T8GP1		PNP	16points																				
T8GP2			32points																				
T8P1	PROFIBUS-DP	NPN	16points																				
T8P2			32points																				
T8PP1		PNP	16points																				
T8PP2			32points																				
T8EC1	EtherCAT	NPN	16points																				
T8EC2			32points																				
T8ECP1		PNP	16points																				
T8ECP2			32points																				
T8EN1	EtherNet/IP	NPN	16points																				
T8EN2			32points																				
T8ENP1		PNP	16points																				
T8ENP2			32points																				
T8D1	DeviceNet	NPN	16points																				
T8D2			32points																				
T8DP1		PNP	16points																				
T8DP2			32points																				
T8EB1	CC-Link IEF Basic	NPN	16points																				
T8EB2			32points																				
T8EBP1		PNP	16points																				
T8EBP2			32points																				
T8EF1	CC-Link IE Field	NPN	16points																				
T8EF2			32points																				
T8EFP1		PNP	16points																				
T8EFP2			32points																				
T8EP1	PROFINET	NPN	16points																				
T8EP2			32points																				
T8EPP1		PNP	16points																				
T8EPP2			32points																				
T8KC1	IO-Link	NPN	16points																				
T8KC2			32points																				
T8KCP1		PNP	16points																				
T8KCP2			32points																				

	1	2	3	4	5	6	7	8	9	10	11	12	13	14	15	16	17	18	19	20
1																				
2																				
3																				
4																				
5																				
6																				
7																				
8																				
9																				
10																				
11																				
12																				
13																				
14																				
15																				
16																				
17																				
18																				
19																				
20																				
21																				
22																				
23																				
24																				
25																				
26																				
27																				
28																				
29																				
30																				
31																				
32																				

M4G2 serial transmission thin

M4G$^{A}_{B}$2-T8 manifold specifications

Issue date / /
Company
Contact
Purchase order No.

● Contact ● Quantity set(s) ● Request date /

Slip No.	Order No.

● Manifold model No.

M [ ] G$^{A}_{B}$2 [ ] 0R- [ ] - [ ] [ ] [ ] [ ] - [ ] - 3 - [ ]

Type of solenoid valve | Solenoid position | Port size | Serial transmission | Terminal connector pin layout | Option | Mount | Station No. | Voltage | Clean room specifications

Solenoid valve model No.	Fitting CX A	Fitting CX B	Valve mounting position 1	2	3	4	5	6	7	8	9	10	11	12	13	14	15	16	17	18	19	20	Qty.
4G [ ] 2 [ ] 9R- [ ]																							
4G [ ] 2 [ ] 9R- [ ]																							
4G [ ] 2 [ ] 9R- [ ]																							
4G [ ] 2 [ ] 9R- [ ]																							
4G [ ] 2 [ ] 9R- [ ]																							
3G [ ] 2 [ ] 9R- [ ]																							
3G [ ] 2 [ ] 9R- [ ]																							
Masking plate 4G2R-MP(S)- [ ]																							
Masking plate 4G2R-MP(D)- [ ]																							
Air supply spacer 4G2R-P- [ ]																							
Exhaust spacer 4G2R-R- [ ]																							

Mounting rail	L_2= [ ] * Write an integer multiple of 12.5.	Accessories	Blanking plug								Threaded plug	
			GWP4-B		GWP6-B		GWP8-B		GWP10-B		4G2R-06P	

● Wiring specification (Not required for standard wiring and double wiring. Complete these specifications when specifying the wiring order and additional cables)

Connector pin No. T8*				Mounting position 1	2	3	4	5	6	7	8	9	10	11	12	13	14	15	16	17	18	19	20
T8G1	CC-Link	NPN	16points																				
T8G2			32points																				
T8GP1		PNP	16points																				
T8GP2			32points																				
T8P1	PROFIBUS-DP	NPN	16points																				
T8P2			32points																				
T8PP1		PNP	16points																				
T8PP2			32points																				
T8EC1	EtherCAT	NPN	16points																				
T8EC2			32points																				
T8ECP1		PNP	16points																				
T8ECP2			32points																				
T8EN1	EtherNet/IP	NPN	16points																				
T8EN2			32points																				
T8ENP1		PNP	16points																				
T8ENP2			32points																				
T8D1	DeviceNet	NPN	16points																				
T8D2			32points																				
T8DP1		PNP	16points																				
T8DP2			32points																				
T8EB1	CC-Link IEF Basic	NPN	16points																				
T8EB2			32points																				
T8EBP1		PNP	16points																				
T8EBP2			32points																				
T8EF1	CC-Link IE Field	NPN	16points																				
T8EF2			32points																				
T8EFP1		PNP	16points																				
T8EFP2			32points																				
T8EP1	PROFINET	NPN	16points																				
T8EP2			32points																				
T8EPP1		PNP	16points																				
T8EPP2			32points																				
T8KC1	IO-Link	NPN	16points																				
T8KC2			32points																				
T8KCP1		PNP	16points																				
T8KCP2			32points																				

	1	2	3	4	5	6	7	8	9	10	11	12	13	14	15	16	17	18	19	20
1																				
2																				
3																				
4																				
5																				
6																				
7																				
8																				
9																				
10																				
11																				
12																				
13																				
14																				
15																				
16																				
17																				
18																				
19																				
20																				
21																				
22																				
23																				
24																				
25																				
26																				
27																				
28																				
29																				
30																				
31																				
32																				

M4G3 serial transmission thin

M4G$^{A}_{B}$3-T8 manifold specifications

Issue date / /

Company

Contact

Purchase order No.

● Contact ● Quantity set(s) ● Request date /

Slip No.	Order No.

● Manifold model No.

M [ ] G$^{A}_{B}$3 [ ] 0R- [ ] - [ ] [ ] [ ] [ ] - [ ] - 3 - [ ]

Type of solenoid valve | Solenoid position | Port size | Serial transmission | Terminal connector pin layout | Option | Mount | Station No. | Voltage | Clean room specifications

Solenoid valve model No.	Fitting CX A	Fitting CX B	Valve mounting position 1	2	3	4	5	6	7	8	9	10	11	12	13	14	15	16	Qty.
4G [ ] 3 [ ] 9R- [ ]																			
4G [ ] 3 [ ] 9R- [ ]																			
4G [ ] 3 [ ] 9R- [ ]																			
4G [ ] 3 [ ] 9R- [ ]																			
4G [ ] 3 [ ] 9R- [ ]																			
3GA3 [ ] 9R- [ ]																			
3GA3 [ ] 9R- [ ]																			
Masking plate 4G3R-MP(S)- [ ]																			
Masking plate 4G3R-MP(D)- [ ]																			
Air supply spacer 4G3R-P- [ ]																			
Exhaust spacer 4G3R-R- [ ]																			

Mounting rail	Accessories	Blanking plug						Threaded plug	
L2= [ ] * Write an integer multiple of 12.5.		GWP6-B		GWP8-B		GWP10-B		4G3R-08P	

● Wiring specification (Not required for standard wiring and double wiring. Complete these specifications when specifying the wiring order and additional cables)

Connector pin No. T8*				Mounting position 1	2	3	4	5	6	7	8	9	10	11	12	13	14	15	16
T8G1	CC-Link	NPN	16points																
T8G2			32points																
T8GP1		PNP	16points																
T8GP2			32points																
T8P1	PROFIBUS-DP	NPN	16points																
T8P2			32points																
T8PP1		PNP	16points																
T8PP2			32points																
T8EC1	EtherCAT	NPN	16points																
T8EC2			32points																
T8ECP1		PNP	16points																
T8ECP2			32points																
T8EN1	EtherNet/IP	NPN	16points																
T8EN2			32points																
T8ENP1		PNP	16points																
T8ENP2			32points																
T8D1	DeviceNet	NPN	16points																
T8D2			32points																
T8DP1		PNP	16points																
T8DP2			32points																
T8EB1	CC-Link IEF Basic	NPN	16points																
T8EB2			32points																
T8EBP1		PNP	16points																
T8EBP2			32points																
T8EF1	CC-Link IE Field	NPN	16points																
T8EF2			32points																
T8EFP1		PNP	16points																
T8EFP2			32points																
T8EP1	PROFINET	NPN	16points																
T8EP2			32points																
T8EPP1		PNP	16points																
T8EPP2			32points																
T8KC1	IO-Link	NPN	16points																
T8KC2			32points																
T8KCP1		PNP	16points																
T8KCP2			32points																

MN4GA/4GB

Pilot operated 3, 5-port valve

Block manifold

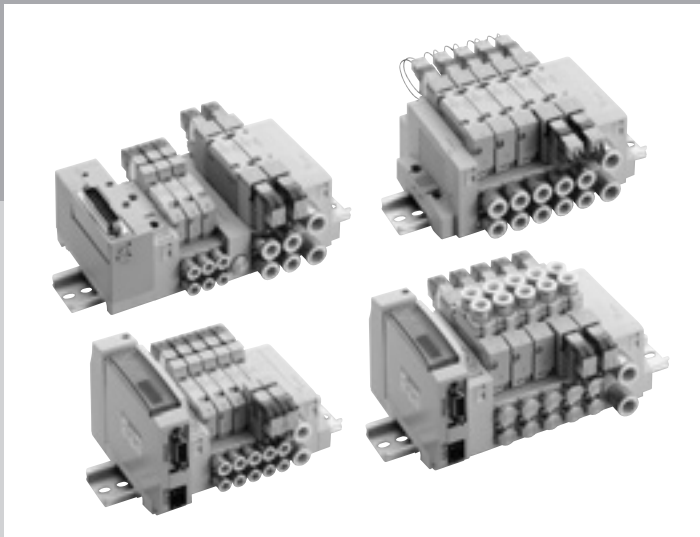

CONTENTS

Series variation 626
Electrical connections list (wire connections/circuit) 629
Product introduction 420

Individual wiring block manifold

- **Body piping (MN4GA1/2) 630**
- **Base piping (MN4GB1/2) 638**

Reduced wiring block manifold

- **Body piping (MN4GA1/2-T*) 646**
- **Base piping (MN4GB1/2-T*) 662**

Mix manifold

- **4G1/2 (MN3GAX12/MN4GAX12/MN4GBX12) 680**

Block components 682
Related components (air supply spacer/pilot check valve/ silencer/blanking plug, etc.) 693
Related parts 699
Manifold and wiring specifications sheet 700
Technical data
①Pneumatic system selection guide 744
②Notes on wiring 713
③Exhaust check valve 751
④How to expand reduced wiring manifold 736
⚠ Safety precautions 750

Series variation

MN4GA/4GB Series

* For metal base (integrated), refer to p 425.

		Appearance series	Model No.	Electrical connections	Position Number of solenoid valves JIS symbol	Valve performance: Flow rate Properties C [dm³/(s·bar)] *1	Valve performance: Applicable Cylinder diameter	Voltage(V)
Individual wiring manifold	Body piping	MN4GA180R 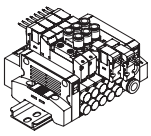	MN4GA1	Blank —E□	● 3-port valve 2-position single NC 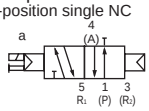	1.0 to 1.2	ø20 to ø40	AC100 AC200 DC24 DC12 DC3 DC5 (*2)
			MN4GA2	Blank —E□ —B		2.2 to 2.5	ø40 to ø80	
	Base piping	MN4GB180R 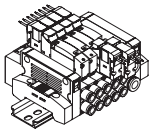	MN4GB1	Blank —E□	2-position single NO 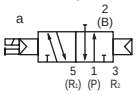	1.0 to 1.2	ø20 to ø40	
			MN4GB2	Blank —E□ —B		2.2 to 2.5	ø40 to ø80	
Reduced wiring manifolds	Body piping	Terminal block MN4GA280R 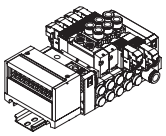	MN4GA1 (N3GA1) (N4GA1)	—T10 —T11 (—A2N)	● 5-port valve 2 position single 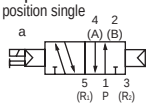	1.0 to 1.2	ø20 to ø40	DC24 DC12
			MN4GA2 (N3GA2) (N4GA2)		2-position double 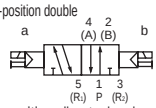	2.2 to 2.5	ø40 to ø80	
		Connector MN4GA280R 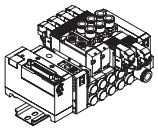	MN4GA1 (N3GA1) (N4GA1)	T30 T5□ (A2N)	3-position all ports closed 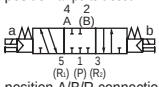	1.0 to 1.2	ø20 to ø40	DC24 DC12
			MN4GA2 (N3GA2) (N4GA2)		3-position A/B/R connection 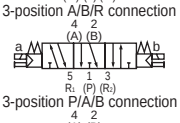	2.2 to 2.5	ø40 to ø80	
		Serial transmission MN4GA180R 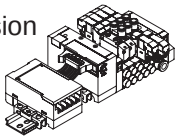	MN4GA1 (N3GA1) (N4GA1)	—T6G1 —T7□ —T8□ (—A2N)	3-position P/A/B connection 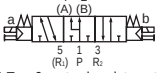	1.0 to 1.2	ø20 to ø40	DC24
			MN4GA2 (N3GA2) (N4GA2)			2.2 to 2.5	ø40 to ø80	
	Base piping	Terminal block MN4GB180R 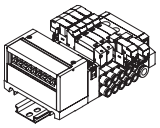	MN4GB1 (N4GB1)	T10 T11 (A2N)	● Two 3-port valves integrated NC/NC 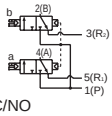	1.0 to 1.2	ø20 to ø40	DC24 DC12
			MN4GB2 (N4GB2)			2.2 to 2.5	ø40 to ø80	
		Connector MN4GB180R 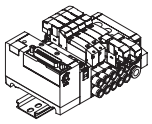	MN4GB1 (N4GB1)	—T30 —T5□ (—A2N)	NC/NO 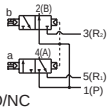	1.0 to 1.2	ø20 to ø40	DC24 DC12
			MN4GB2 (N4GB2)			2.2 to 2.5	ø40 to ø80	
		Serial transmission MN4GB280R 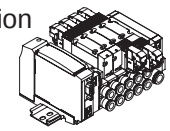	MN4GB1 (N4GB1)	—T6G1 —T7□ —T8□ (—A2N)	NO/NC 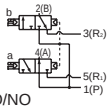	1.0 to 1.2	ø20 to ø40	DC24
			MN4GB2 (N4GB2)		NO/NO 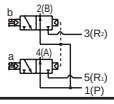	2.2 to 2.5	ø40 to ø80	

*1: Effective cross-sectional area S and sonic conductance C are converted as S ≈ 5.0 x C.
*2: The grommet lead wire specifications are compatible with DC voltage only.
*3: Only compatible with base piping models.
*4: Specification for reduced wiring manifold equipped.Only 12/24 VDC is supported.

	Switching position									A/B Piping port																A/B Piping port						Power supply connection													
	2-position				3-position			Two 3-port valves integrated		Barbed fitting		Push-in fitting			Radial push-in fitting (upward) (*3)				Radial push-in fitting (downward)				Female thread		Push-in fitting					Female thread	Single unit, ind. wiring				Reduced wiring									Selection page
	Normally closed	Normally open	Single	Double	All ports closed	ABR connection	PAB connection		Mix	ø1.8	ø1.8	ø4	ø6	ø8	ø1.8	ø4	ø6	ø8	ø1.8	ø4	ø6	ø8	M5	Rc1/8	ø1/8 inch	ø5/32 inch	ø1/4 inch	ø5/16 inch	NPT1/8	G1/8	Grommet lead (*2)	E□	EJ Connector	DIN terminal box	A Connector (*4)	Common terminal box	D sub-connector	Flat cable with power supply terminal	Flat cable without power supply terminal	Serial transmission				
										CF	C18	C4	C6	C8	CL18	CL4	CL6	CL8	CD18	CD4	CD6	CD8	M5	06	C3N	C4N	C6N	C8N	06N	06G	Blank	E□	EJ	B□	A2N	T1□	T30	T50	T5□	T6G1	T7□	T8□	
	●	●	●	●	●	●	●	●	●	●	●	●	●										●		●	●					●	●	●											630
	●	●	●	●	●	●	●	●	●			●	●	●										●			●	●	●	●	●	●	●	●											
			●	●	●	●	●	●	●	●	●	●	●		●	●	●		●	●	●				●	●					●	●	●											638
			●	●	●	●	●	●	●			●	●	●			●	●			●	●					●	●			●	●	●	●											
	●	●	●	●	●	●	●	●	●	●	●	●	●										●		●	●																			646
	●	●	●	●	●	●	●	●	●			●	●	●										●			●	●	●	●					●	●									
	●	●	●	●	●	●	●	●	●	●	●	●	●										●		●	●																			
	●	●	●	●	●	●	●	●	●			●	●	●										●			●	●	●	●					●					●	●	●			
			●	●	●	●	●	●	●	●	●	●	●		●	●	●		●	●	●				●	●																			662
			●	●	●	●	●	●	●			●	●	●			●	●			●	●					●	●							●	●									
			●	●	●	●	●	●	●	●	●	●	●		●	●	●		●	●	●				●	●																			
			●	●	●	●	●	●	●			●	●	●			●	●			●	●					●	●							●		●	●	●						
			●	●	●	●	●	●	●	●	●	●	●		●	●	●		●	●	●				●	●														●	●	●			
			●	●	●	●	●	●	●			●	●	●			●	●			●	●					●	●																	

SCPD3
SCM
SSD2
MDC2
SMG
LCM
LCR
LCG
LCX
STM
STG
STR2
MRL2
GRC
Cylinder switch
MN3E MN4E
4GA/B
M4GA/B
MN4GA/B
F.R (module unit)
Clean F.R
Precision R
Press gauge Diff. press gauge
Electro-pneumatic R
Speed controller
Auxiliary valve
Fitting/ tube
Clean air unit
Pressure sensor
Flow rate sensor
Valve for air blow
Ending

Electrical connections

Discrete valve/individual wiring manifold

Blank Grommet lead wire Ⓐ

● Lead wire length 300mm

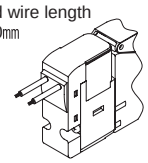

EO E-connector Ⓐ

● **Lead wire length**
300mm
500mm
1m
2m
3m

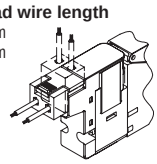

E0N E-connector Without socket

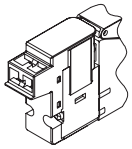

E1 E-connector with socket/terminal

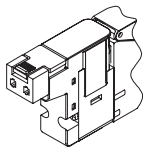

E2 E-connector ⒶⒷⒸ

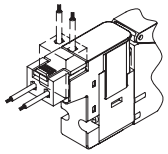

E2N E-connector without socket ⒷⒸ

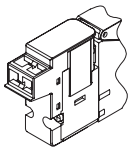

E3 E-connector with socket/terminal ⒷⒸ

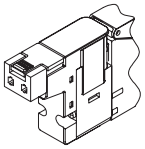

A2N A-connector downward without socket

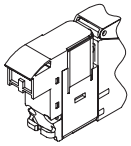

● For AC voltages, the ⓐ dimension is 3.5mm longer than for DC voltages.

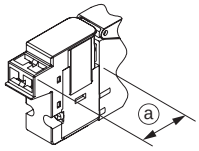

B BN DIN terminal box (BN: Without terminal box)

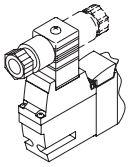

E0*J EJ-connector Ⓐ

● **Lead wire length**
1m
2m
3m

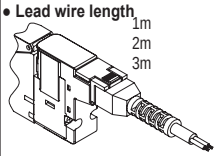

E2*J EJ-connector ⒶⒷⒸ

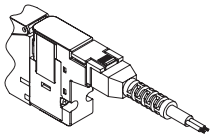

Reduced wiring manifolds

T10 Common terminal block M3 thread specifications (left side)

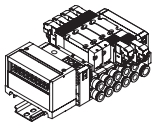

T10R Common terminal block M3 thread specifications (right side)

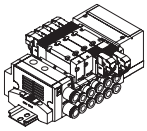

T11 Common terminal block clamping specifications (left side)

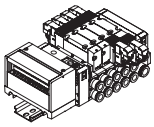

T11R Common terminal block clamping specifications (right side)

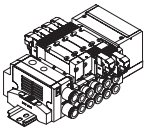

T30 D-sub-connector (left side)

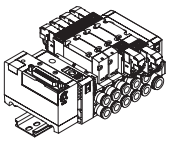

T30R D-sub-connector (right side)

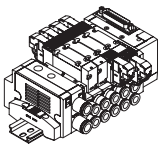

T50 Flat cable with power supply terminal (left side)

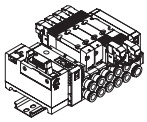

T50R Flat cable with power supply terminal (right side)

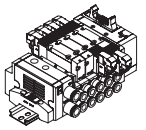

T5 1 2 3 Flat cable without power supply terminal (left side)

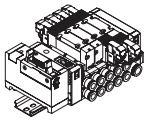

T5 1 2 3 R Flat cable without power supply terminal (right side)

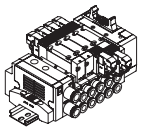

T6G1 Serial transmission

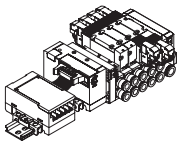

T7*0 T7*1 Serial transmission thin slot type

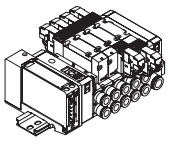

T8*1 T8*2 Serial transmission thin slot type

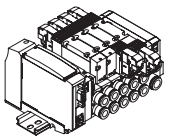

Manual override

Blank Non-locking/locking common H

(Standard equipment)

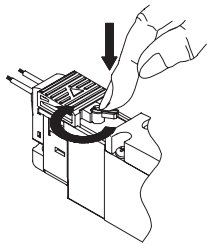

①For non-locking, push to turn ON and release to turn OFF

②For locking, turn PUSH + turn 90° clockwise to hold the ON state. Turn counterclockwise to unlock OFF

M Non-locking

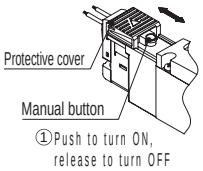

Ⓐ : With lead wire
Ⓑ : With lamp
Ⓒ : With surge suppressor

Other options

H With exhaust check valve

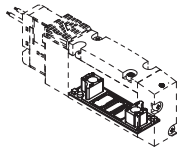

Standard for pilot exhaust

K External pilot

Main pressure and pilot pressure individual circuit specifications.

A Ozone/cutting fluid proof product

Select for coolant inflow and ozone measures.

F AB port filter integrated

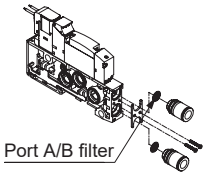

G1 G2 Pressure sensor

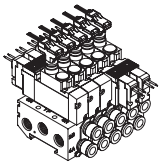

Z1 Z3 Air supply spacer Exhaust spacer

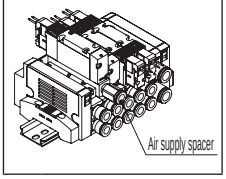

Electrical connection circuit diagram

Other options	
W1	Single spare wiring

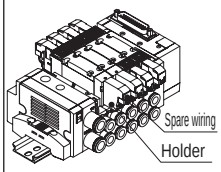

L	With pipe adaptor

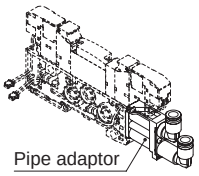

Q	Reduced wiring duct

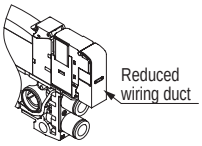

	Electrical connections	Without lead wire	With lead wire	With lamp	With surge suppressor	Without socket	Circuit diagram
	Blank — Grommet lead wire		●				DC (±) (∓)
	E0 — E-connector		●				DC (±) (∓)
	E0*J — EJ-connector		●				
	E0N — E-connector					●	AC 100V (~) (~)
	E1 — E-connector	●					
	E2 — E-connector		●	●	●		DC (±) (∓)
	E2*J — EJ-connector		●	●	●		
	E2N — E-connector			●	●	●	AC 100V (~) (~)
	E3 — E-connector	●		●	●		
	A2N — A-connector			●	●	●	DC (±) (∓)
	B — DIN terminal box	●		●	●		DC (±) (∓)
	BN — DIN terminal box (without terminal box)						AC 100V (~) (~) / AC 200V (~) (~)
Option S	E2 — E-connector		●	●	●		DC (±) (∓)
Option S	E2*J — EJ-connector		●	●	●		
Option S	E2N — E-connector			●	●	●	
Option S	A2N — A-connector			●	●	●	
Option E	E2 — E-connector		●	●	●		DC (±) (∓) Control circuit
Option E	E2*J — EJ-connector		●	●	●		
Option E	E2N — E-connector			●	●	●	
Option E	A2N — A-connector			●	●	●	

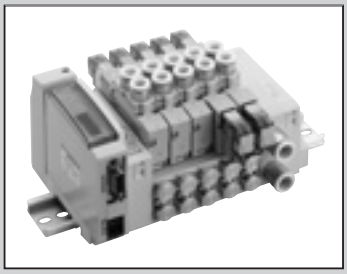

Reduced wiring block manifold
Body piping

MN4GA1/2 Series

● Applicable cylinder bore size: ø20 to ø80

RoHS CAD

JIS symbol

● 3-port valve

2-position single NC

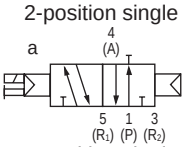

2-position single NO

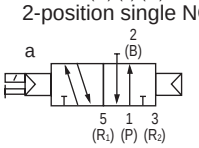

● Dual 3-port valve integrated

(A side valve: NC, B side valve: NC)

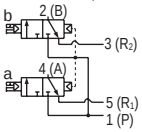

(A side valve: NC, B side valve: NO)

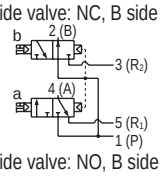

(A side valve: NO, B side valve: NC)

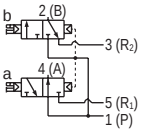

(A side valve: NO, B side valve: NO)

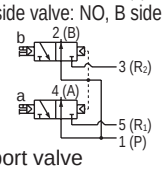

● 5-port valve

2-position single

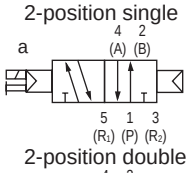

2-position double

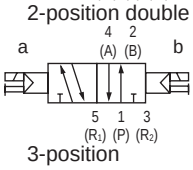

3-position
All ports closed

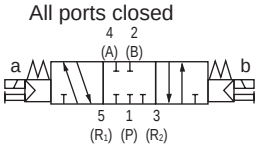

3-position A/B/R connection

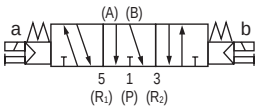

3 positions P/A/B connection

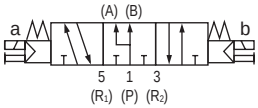

Structure and material restriction

	Structure	Material restriction			Model No.
P7 Series	Dust generation preventing				– P70
	Dust generation preventing	Copper-based materials prohibited	Silicon-based materials prohibited	Halogen-based materials prohibited (fluorine, chlorine, bromine)	– P74 Custom order product

Manifold common specifications

Descriptions		
Manifold		Block manifold
Mounting method		DIN rail mount
Supply and exhaust method		Common supply/common exhaust (With internal exhaust check valve)
Pilot exhaust method		Main valve/pilot valve common exhaust (Pilot exhaust check valve integrated)
Piping direction		Valve top direction
Valve and operation		Pilot operated soft spool valve
Working fluid		Compressed air
Max. working pressure	MPa	0.7
Min. working pressure	MPa	0.2 (*3)
Proof pressure	MPa	1.05
Ambient temperature	°C	-5 to 55 (no freezing)
Fluid temperature	°C	5 to 55
Manual operating device		Common for non-locking/locking (standard)
Lubrication	*1	Not required
Degree of protection	*2	Dust proof
Vibration resistance	m/s^2	50 or less
Shock resistance	m/s^2	300 or less
Atmosphere		Containing corrosive gas is not permissible

*1: Use turbine oil Class 1 ISO VG32 for lubrication. Excessive or intermittent lubrication results in unstable operation.
*2: Avoid water drops or oil, etc., during use.IP65 (water jet proof) applies for DIN terminal box specifications.However, the specified outer diameter of the cord and tightening torque must be used for fixing in place.
*3: The working pressure range is 0 to 0.7MPa when the external pilot (option code: K) is selected. Set the external pilot pressure between 0.2 and 0.7 MPa.

Electrical specifications

Item		Description					
Rated voltage	V	DC24	DC12	DC5	DC3	AC100	AC200
Voltage fluctuation range		±10%					
Holding current A (*4)	Standard	0.015 (0.017)	0.030 (0.034)	0.072 (0.082)	0.120 (0.136)	0.009 (0.009)	0.006 (0.006)
	With low exoergic/ energy circuit	0.005	0.010	–		–	
Power consumption W (*4)	Standard	0.35(0.40)		0.35(0.40)		–	
	With low exoergic/ energy circuit	0.1		–		–	
Apparent power VA (*4)	Standard	–		–		0.93 (0.98)	1.40
Thermal class		B					
Surge suppressor		Option					
Indicator		Lamp (option)					

*4: Values in ( ) apply when lamp is included.In addition, the type with low exoergic/energy circuit is only available with lamp.

Individual specifications

Item			MN3GA1/MN4GA1	MN3GA2/MN4GA2
Max. station No.			24 stations	20 stations
Port size	Metric fitting/ M5, Rc thread	Port A/B	Barbed fitting ø1.8 Push-in fitting ø1.8, ø4, ø6 M5	Push-in fitting ø4, ø6, ø8 Rc1/8
		P/R Port	Push-in fitting ø6, ø8	Push-in fitting ø8, ø10
	Inch fitting/ M5, NPT thread	Port A/B	Push-in fitting ø1/8", ø5/32" M5	push-in fitting ø1/4", ø5/16" NPT1/8
		P/R Port	Push-in fitting ø1/4", ø5/16"	Push-in fitting ø5/16", ø3/8"
	Metric fitting, G thread	Port A/B	–	G1/8
		P/R Port	–	Push-in fitting ø8, ø10

• **For DIN rail mounting, refer to "Mounting orientation" on page 755 .**
• **For weight, refer to page 634 .**

Performance/characteristics by model

Item			MN3GA1/MN4GA1		MN3GA2/MN4GA2	
			ON	OFF	ON	OFF
Response time	Two 3-port valves integrated		9	12	12	29
	2-position	Single	12	12	19	19
		Double	9	—	18	—
	3-position	ABR connection	8	15	17	30

Values with lamp/surge suppressor are shown. The response times are values with supply pressure of 0.5 MPa at 20°C and without lubrication. They depend on the pressure and the lubricant quality.

Flow characteristics

Model No.	Solenoid position		P→A/B		A/B→R1/R2	
			C [dm^3/(s·bar)]	b	C [dm^3/(s·bar)]	b
MN3GA1 MN4GA1	Dual 3-port valve integrated		0.87	0.37	1.0 (0.68)	0.14 (0.22)
	2-position		0.98	0.33	1.2 (0.71)	0.11 (0.27)
	3-position	All ports closed	0.92	0.34	1.0 —	0.16 —
		ABR connection	0.92	0.29	1.1 (0.69)	0.13 (0.22)
		PAB connection	1.1	0.35	1.1 —	0.17 —
MN3GA2 MN4GA2	Dual 3-port valve integrated		1.7	0.37	2.2 (1.6)	0.13 (0.21)
	2-position		2.2	0.21	2.5 (1.7)	0.19 (0.10)
	3-position	All ports closed	2.0	0.25	2.3 —	0.10 —
		ABR connection	2.0	0.27	2.5 (1.7)	0.18 (0.12)
		PAB connection	2.3	0.31	2.3 —	0.16 —

*1: Effective cross-sectional area S and sonic conductance C are converted as S ≈ 5.0 x C.

*2: Values in ( ) are with built-in exhaust check valve.

Ozone proof specifications • Coolant proof specifications

This can be set by selecting option “A” of Ⓔ in how to order on page 632.

MN4GA1/2 Series

Reduced wiring block manifold; body piping

How to order

Manifold model No.

MN4GA1 1 0 R - C6 - E2 H - 10 - 3 - P70

3-port manifold model No.

MN3GA1 1 0 R - C6 - E2 H - 10 - 3 - P70

Discrete valve block with solenoid valve

N4GA1 1 0 R - C6 - E2 H — 3 - P70

Discrete 3-port valve block with solenoid valve

N3GA1 1 0 R - C6 - E2 H — 3 - P70

Discrete solenoid valve

4GA1 1 9 R - C6 - E2 H — 3 - P70

Discrete 3-port solenoid valve

3GA1 1 9 R - C6 - E2 H — 3 - P70

Ⓐ Model No.

Ⓑ Solenoid position

Ⓒ Port size *1

Ⓓ Electrical connections

Ⓔ Option

Ⓕ Station No.

Ⓖ Voltage

Ⓘ Clean room specifications

⚠ Precautions for model selection

*1: Specify the port size of the P/R port with the supply and exhaust block model No. in the manifold specifications.
*2: Select MN4GA*80R when mixing with 4, 5-port valves. Further, select MN3GA*80R when mixing with masking plate.
*3: Not compatible with combination with external pilot (K). Dimensions are the same as those of the respective 2-position double solenoid.
*4: The push-in fitting cannot be mixed with the discrete valve's 4 (A) or 2 (B) port.
***5: 3-position all ports closed and PAB connection are not provided with the exhaust check valve specifications (H). Refer to page 751 for details on the exhaust check valve.**
*6: Consult with CKD when using a vacuum with the external pilot (K).
*7: *7: Only E2* and E2*J connectors and DC12/24V are supported. In addition, surgeless "S" and low exoergic/energy circuit "E" cannot be selected together.
*8: Surgeless specifications.
*9: A filter is built into port P as standard
***10: Specify the spacer mounting position and quantity in manifold specifications. Stacking multiple spacers is not supported. Combination with the masking plate is not supported. In addition, refer to pages 693 to 696 for details.**
*11: Only the DIN terminal box is supported.
*12: Combination of Item A (Ozone-proof) and Ⓗ clean-room specifications P74 is not available.
*13: Copper-, silicon-, and halogen-free specifications are available as compatible with the main valve part.
*14: P74 Series is made to order.

Code	Content		Ⓐ Model No. Manifold 3-port valve MN3GA1	MN3GA2	5-port valve MN4GA1	MN4GA2	Discrete valve block with solenoid valve/Discrete solenoid valve (N) 3GA1	(N) 3GA2	(N) 4GA1	(N) 4GA2
Ⓑ Solenoid position										
1	2-position single				●	●			●	●
2	2-position double				●	●			●	●
3	3-position all ports closed				●	●			●	●
4	3-position ABR connection				●	●			●	●
5	3-position PAB connection				●	●			●	●
1	2-position single normally closed (*2)		●	●			●	●		
11	2-position single normally open (*2)		●	●			●	●		
66	Dual 3-port valve integrated (*2, 3)	A side valve: Normally closed B side valve: Normally closed	●	●			●	●		
67		A side valve: Normally closed B side valve: Normally open	●	●			●	●		
76		A side valve: Normally open B side valve: Normally closed	●	●			●	●		
77		A side valve: Normally open B side valve: Normally open	●	●			●	●		
8	Mixed manifold (In case of multiple solenoid positions)		●	●	●	●	●	●	●	●
Ⓒ Port size (ports A/B)										
Type	Millimeter fitting/Rc thread									
CF	ø1.8 barbed fitting (applicable tube UP-9102-**)		●		●		●		●	
C18	ø1.8 push-in fitting for fiber tube (applicable tube UP-9402-**)		●		●		●		●	
C4	ø4 push-in fitting		●	●	●	●	●	●	●	●
C6	ø6 push-in fitting		●	●	●	●	●	●	●	●
C8	ø8 push-in fitting			●		●		●		●
CX	Push-in fitting mix	(*4)	●	●	●	●				
M5	M5		●		●		●		●	
06	Rc1/8			●		●		●		●
Type	Inch fitting/inch thread									
C3N	ø1/8 inch push-in fitting		●		●		●		●	
C4N	ø5/32 inch push-in fitting		●		●		●		●	
C6N	ø1/4 inch push-in fitting			●		●		●		●
C8N	ø5/16 inch push-in fitting			●		●		●		●
CXN	Push-in fitting mix	(*4)	●	●	●	●				
06N	1/8NPT			●		●		●		●
Type	G thread									
06G	G1/8			●		●		●		●
Ⓓ Electrical connections	Refer to the following page for electrical connections									
Ⓔ Option										
Blank	Manual override of non-locking/locking common		●	●	●	●	●	●	●	●
M	Manual override of non-locking		●	●	●	●	●	●	●	●
H	With exhaust check valve	(*5)	●	●	●	●	●	●	●	●
K	External pilot	(*6)	●	●	●	●	●	●	●	●
A	Ozone/coolant proof product		●	●	●	●	●	●	●	●
S	Surgeless	(*7)	●	●	●	●	●	●	●	●
E	Low exoergic/energy circuit	(*7) (*8)	●	●	●	●	●	●	●	●
F	Port A/B filter built in	(*9)	●	●	●	●	●	●	●	●
Z1	Air supply spacer	(*10)	●	●	●	●				
Z3	Exhaust spacer	(*10)	●	●	●	●				
Ⓕ Station No.										
1	1 station		●	●	●	●				
to	to									
24	24 stations (Max. station No. for MN3GA2/MN4GA2 is 20.)									
Ⓖ Voltage										
1	100 VAC (rectifier integrated)		●	●	●	●	●	●	●	●
2	200 VAC (rectifier integrated)	(*11)		●		●		●		●
3	24 VDC		●	●	●	●	●	●	●	●
4	12 VDC		●	●	●	●	●	●	●	●
7	3 VDC		○	○	○	○	○	○	○	○
8	5 VDC		○	○	○	○	○	○	○	○

	Structure	Material restrictions								
Ⓗ Clean-room specifications (*12/13/14)										
P70	Exhaust port	—	●	●	●	●	●	●	●	●
P74	Exhaust port	Copper-/silicon-/halogen-based materials (fluorine, chlorine, bromine) are prohibited	○	○	○	○	○	○	○	○

is not available.
○ indicates made to order.

[Electrical connection list]

		Ⓐ Model No.							
		Manifold				Discrete valve black with solenoid valve/ Discrete solenoid valve			
		3-port valve		5-port valve					
		MN3GA1	MN3GA2	MN4GA1	MN4GA2	(N)3GA1	(N)3GA2	(N)4GA1	(N)4GA2
Ⓓ Electrical connections									
Blank	Grommet lead wire (300 mm) (*15)	●	●	●	●	●	●	●	●
B	DIN terminal box (Pg7) With surge suppressor/lamp (*16) (*18)		●		●		●		●
BN	DIN terminal box (Pg7) (Without terminal box) With surge suppressor (*16) (*18)		●		●		●		●
E type connector (upward/lateral common)									
E0	Lead wire (300 mm) (*17)	●	●	●	●	●	●	●	●
E00	Lead wire (500 mm) (*17)	●	●	●	●	●	●	●	●
E01	Lead wire (1000 mm) (*17)	●	●	●	●	●	●	●	●
E02	Lead wire (2000 mm) (*17)	●	●	●	●	●	●	●	●
E03	Lead wire (3000 mm) (*17)	●	●	●	●	●	●	●	●
E0N	Without lead wire (without socket) (*17)	●	●	●	●	●	●	●	●
E1	Without lead wire (socket/terminal attached) (*17)	●	●	●	●	●	●	●	●
E2	Lead wire (300 mm), surge suppressor/indicator lamp	●	●	●	●	●	●	●	●
E20	Lead wire (500 mm), surge suppressor/indicator lamp	●	●	●	●	●	●	●	●
E21	Lead wire (1000 mm), surge suppressor/indicator lamp	●	●	●	●	●	●	●	●
E22	Lead wire (2000 mm), surge suppressor/indicator lamp	●	●	●	●	●	●	●	●
E23	Lead wire (3000 mm), surge suppressor/indicator lamp	●	●	●	●	●	●	●	●
E2N	No lead wire (without socket), surge suppressor/indicator lamp	●	●	●	●	●	●	●	●
E3	No lead wire (with socket/terminal), surge suppressor/indicator lamp	●	●	●	●	●	●	●	●
EJ type connector (socket with cover, upward/lateral common)									
E01J	Lead wire (1000 mm) (*17)	●	●	●	●	●	●	●	●
E02J	Lead wire (2000 mm) (*17)	●	●	●	●	●	●	●	●
E03J	Lead wire (3000 mm) (*17)	●	●	●	●	●	●	●	●
E21J	Lead wire (1000 mm), surge suppressor/indicator lamp	●	●	●	●	●	●	●	●
E22J	Lead wire (2000 mm), surge suppressor/indicator lamp	●	●	●	●	●	●	●	●
E23J	Lead wire (3000 mm), surge suppressor/indicator lamp	●	●	●	●	●	●	●	●

*15: The grommet lead wire specifications are compatible with DC voltage only.
*16: AC voltages and 12/24 VDC are supported. In addition, a lamp comes with the terminal box.
*17: AC voltage includes a rectifier circuit.
*18: The terminal box conforms to EN175301-803 Type C (former DIN 43650-C). Refer to pages 756 and 757 for details.

Electrical connections

Discrete valve/individual wiring manifold

Blank Grommet lead wire

● **Lead wire length**
300 mm

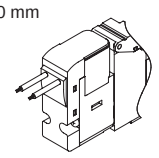

E1 E3 E type connector with socket/terminal

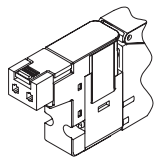

E0 E2 E type connector

● **Lead wire length**
300 mm
500 mm
1 m
2 m
3 m

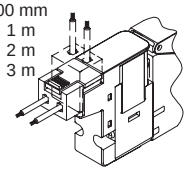

B DIN terminal box

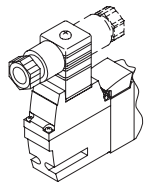

E0N E2N E type connector without socket

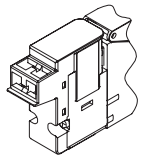

BN DIN terminal box without terminal box

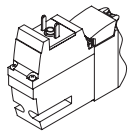

E0*J E2*J EJ type connector

● **Lead wire length**
1 m
2 m
3 m

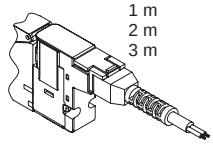

SCPD3
SCM
SSD2
MDC2
SMG
LCM
LCR
LCG
LCX
STM
STG
STR2
MRL2
GRC
Cylinder switch
MN3E MN4E
4GA/B
M4GA/B
MN4GA/B
F.R (module unit)
Clean F.R
Precision R
Press gauge Diff. press gauge
Electro-pneumatic R
Speed controller
Auxiliary valve
Fitting/ tube
Clean air unit
Pressure sensor
Flow rate sensor
Valve for air blow
Ending

Manifold components explanation and parts list

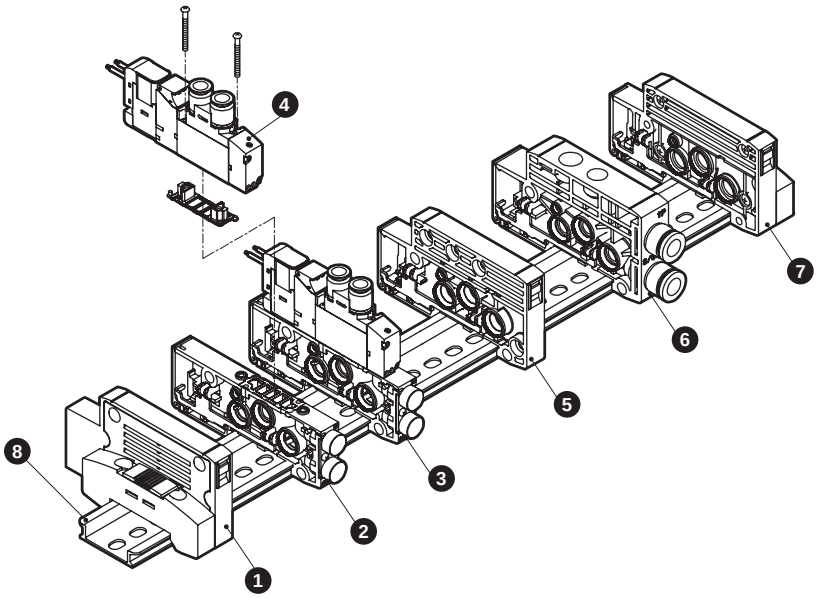

List of main components (refer to pages 682 to 698 for details)

No.	Component name	Model No. (example)	No.	Component name	Model No. (example)
1	Electrical block	N4G1R-EL-P70	5	Partition block	N4G1R-S-P70/P74
2	Discrete valve block	N4GA1R-V1-P70/P74	6	Supply and exhaust block	N4G1R-Q-8-P70/P74
3	Discrete valve block with solenoid valve	N4GA110R-C6-H-3-P70/P74	7	End block R	N4G1R-ER-P70/P74
4	Solenoid valve body	4GA119R-C6-H-3-P70/P74	8	DIN rail	N4GR-BAA (length)-P70

A type reduced wiring weight

4GA1 (g)

Parts name	Model No.	Weight	Parts name	Model No.	Weight
Valve block with solenoid valve	N3GA110R-C6-3	70	Supply and exhaust block	N4G1R-Q-8	58
	N3GA1110R-C6-3	70		N4G1R-QK-8	60
	N4GA110R-C6-3	70	End block	N4G1R-E*	60
	N4GA120R-C6-3	87		N4G1R-EX*	60
	N4GA1$^{3}_{5}$0R-C6-3	91	Partition block	N4G1R-S	45
	N3GA1660R-C6-3	87	Valve block	N4GA1R-V1	28
Valve block with masking plate	N4GA1R-MP	34	DIN rail	N4GR-BAA-P70(length)	0.19/mm

4GA2 (g)

Parts name	Model No.	Weight	Parts name	Model No.	Weight
Valve block with solenoid valve	N3GA210R-C8-3	129	Supply and exhaust block	N4G2R-Q-10	83
	N3GA2110R-C8-3	129		N4G2R-QK-10	85
	N4GA210R-C8-3	129	End block	N4G2R-E*	84
	N4GA220R-C8-3	147		N4G2R-EX*	85
	N4GA2$^{3}_{5}$0R-C8-3	159	Partition block	N4G2R-S	60
	N3GA2660R-C8-3	147	Valve block	N4GA2R-V1	53
Valve block with masking plate	N4GA2R-MP	66	DIN rail	N4GR-BAA(length)	0.19/mm

Parts list

Application	Parts name	Model No.	Application	Parts name	Model No.
Valve 4G1	Cartridge fitting ø1.8 barbed	4G1R-JOINT-CF-P70	Common	Coil assembly	4GR-[*1]-[*2]-COIL-[*3]-P70 *1: Electrical connections (Blank, B, E0,...) *2: Ozone/cutting oil proof (blank, A) Surgeless (S) Low exoergic/energy-saving circuit (E) External pilot (K) *3: Voltage (1, 2, 3, 4)
	Cartridge fitting ø1.8 straight	4G1R-JOINT-C18-P70			
	Cartridge fitting ø4 straight	4G1R-JOINT-C4-P70			
	Cartridge fitting ø6 straight	4G1R-JOINT-C6-P70			
	Cartridge fitting ø1/8 inch straight	4G1R-JOINT-C3N-P70		E-connector socket assembly	4GR-SOCKET-ASSY-[*1]-[*3]-P70 *1: Electrical connections (E0, E00 ...), *3: Voltage (1, 3, 4)
	Cartridge fitting ø5/32 inch straight	4G1R-JOINT-C4N-P70			
	Plug cartridge	4G1R-JOINT-CPG-P70			
Valve 4G2	Cartridge fitting ø4 straight	4G2R-JOINT-C4-P70		EJ-connector socket assembly	4GR-SOCKET-ASSY-[*1]-P70 *1: electrical connections (E01J, E02J,..)
	Cartridge fitting ø6 straight	4G2R-JOINT-C6-P70			
	Cartridge fitting ø8 straight	4G2R-JOINT-C8-P70	Valve 4G2	DIN terminal box assembly	4GR-TERMINAL-BOX-[*3]-P70 *3: Voltage (1, 2, 3, 4)
	Cartridge fitting ø1/4 inch straight	4G2R-JOINT-C6N-P70			
	Cartridge fitting ø5/16 inch straight	4G2R-JOINT-C8N-P70			
	Plug cartridge	4G2R-JOINT-CPG-P70			

Dimensions CAD

MN4GA1-P7*

● Grommet lead wire (blank)

* For the 2-position single 3-port valve, either A port or B port is a plug.
In addition, the two 3-port valve integrated has the same dimensions as the double model.

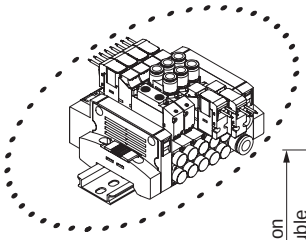

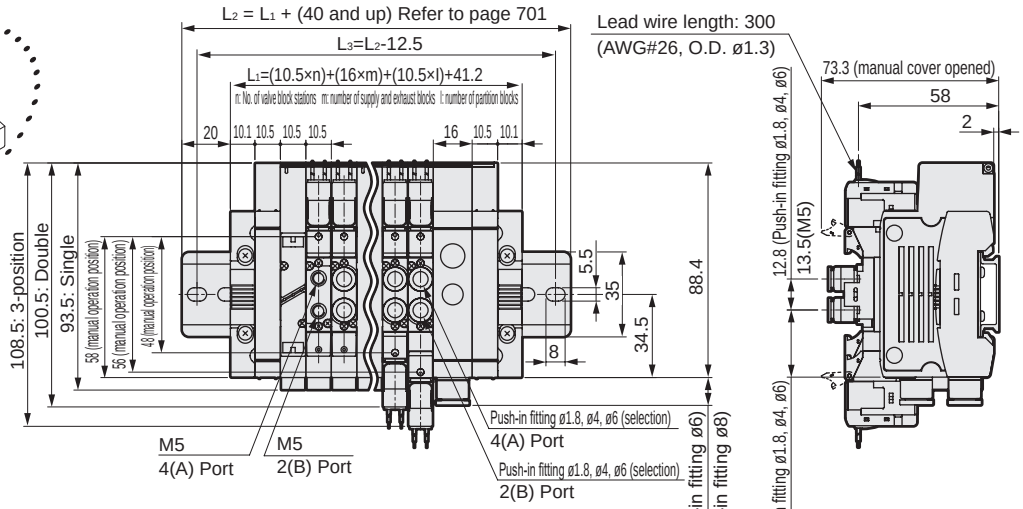

Push-in fitting bore size	* Dimensions
ø1.8	65.1
ø4	69.1
ø6	70.3
ø1/8”	69.6
ø5/32”	69.1

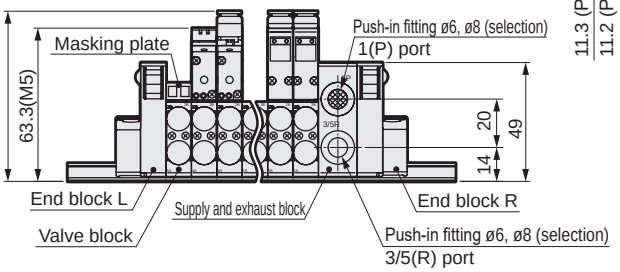

● ø1.8 barbed fitting (CF)

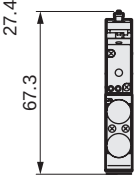

● E type connector (E)

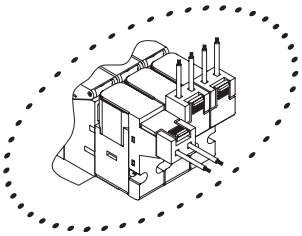

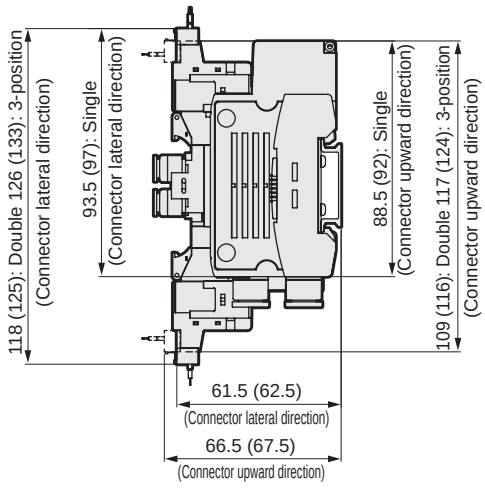

Note: Values in ( ) are for AC voltage.

● EJ type connector (E**J)

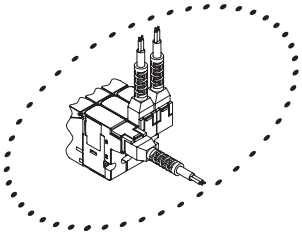

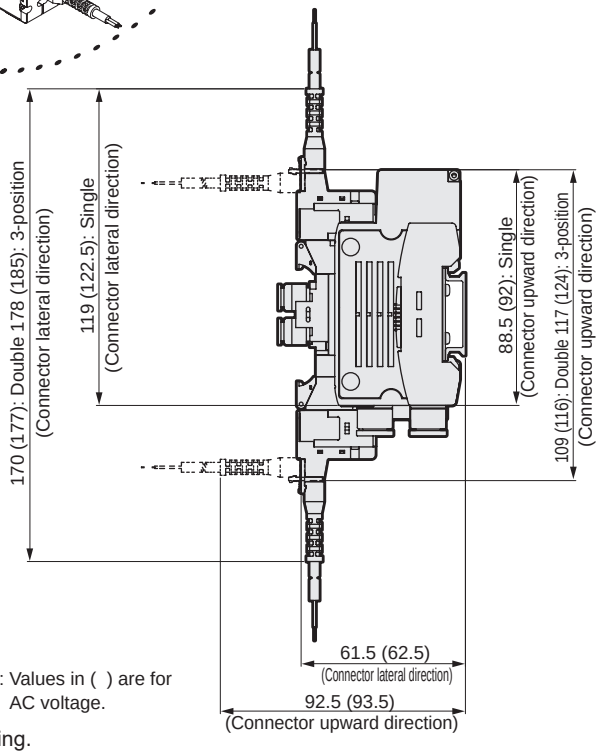

Note: Values in ( ) are for AC voltage.

* Refer to page 661 for dimensions of the supply and exhaust block push-in fitting.

Dimensions

MN4GA2-P7*

● Grommet lead wire (blank)

* For the 2-position single 3-port valve, either A port or B port is a plug.
In addition, the two 3-port valve integrated have the same dimensions as the double model.

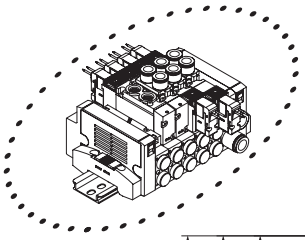

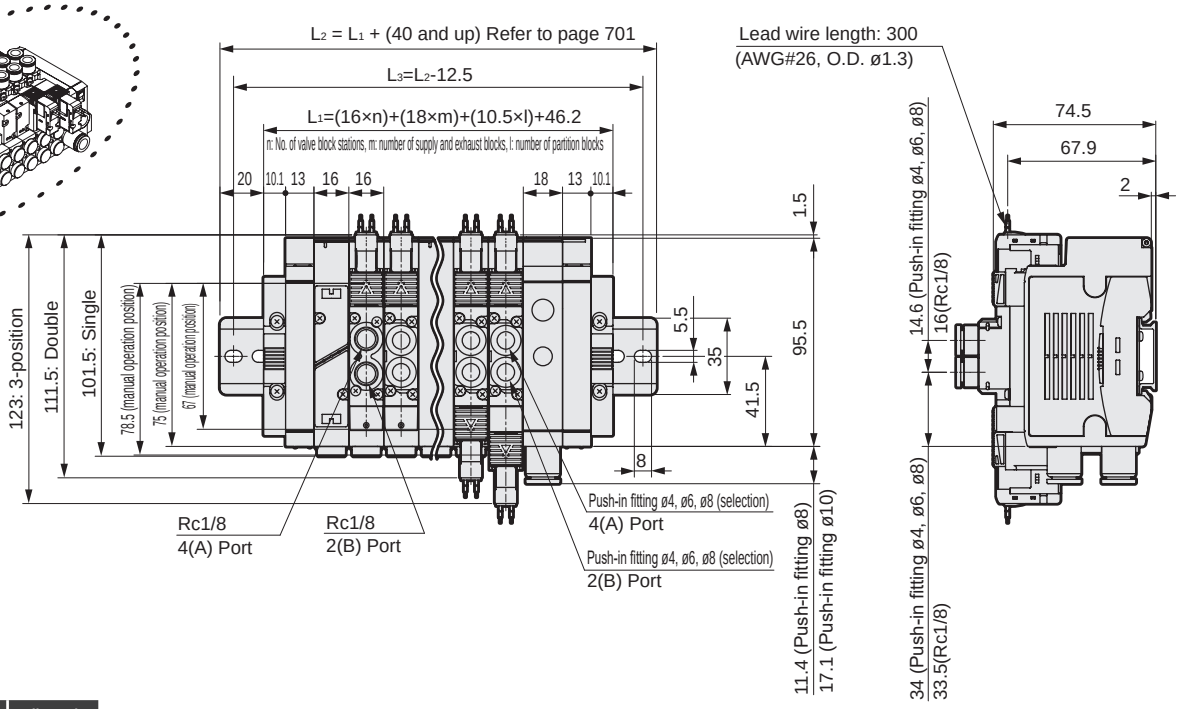

Push-in fitting bore size	*1 dimension
ø4	91.7
ø6	
ø8	
ø1/4”	92.6
ø5/16”	91.9

Female thread bore size	*2 dimension
Rc1/8	76.5
NPT1/8	77.8
G1/8	

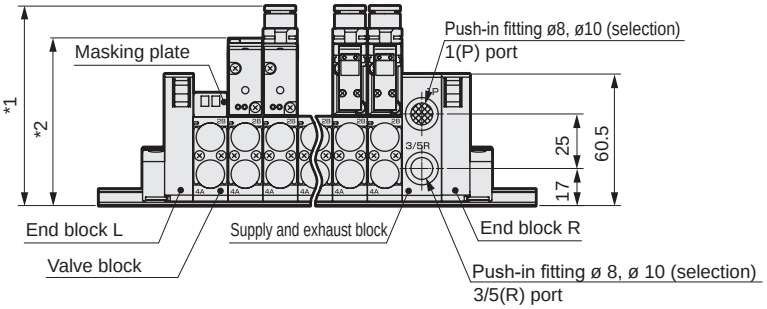

Dimensions

● E type connector (E)

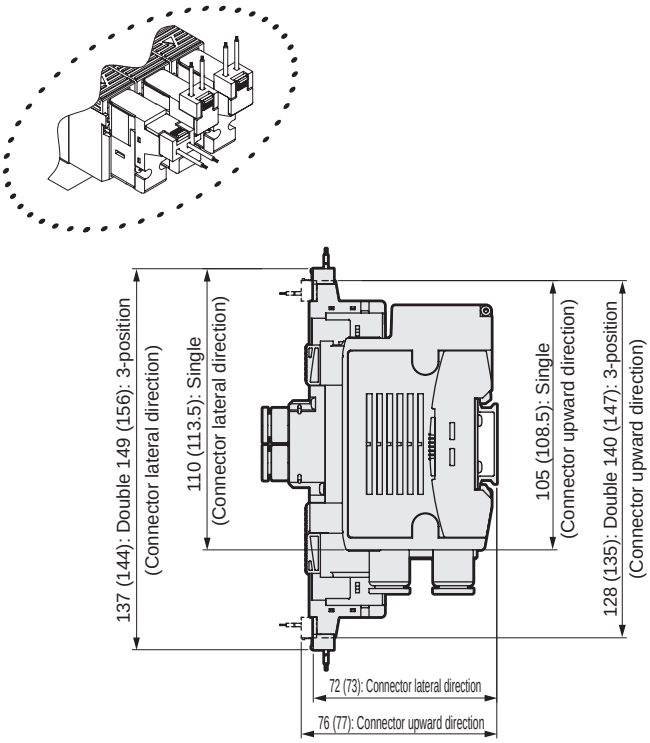

Note: Values in ( ) are for AC voltage.

● EJ type connector (E**J)

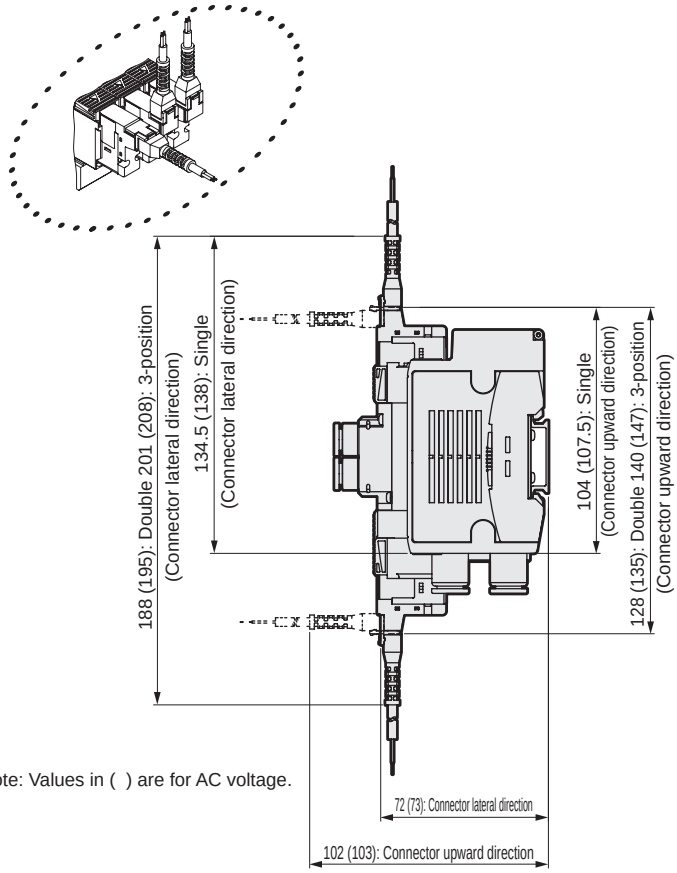

Note: Values in ( ) are for AC voltage.

● DIN terminal box (B)

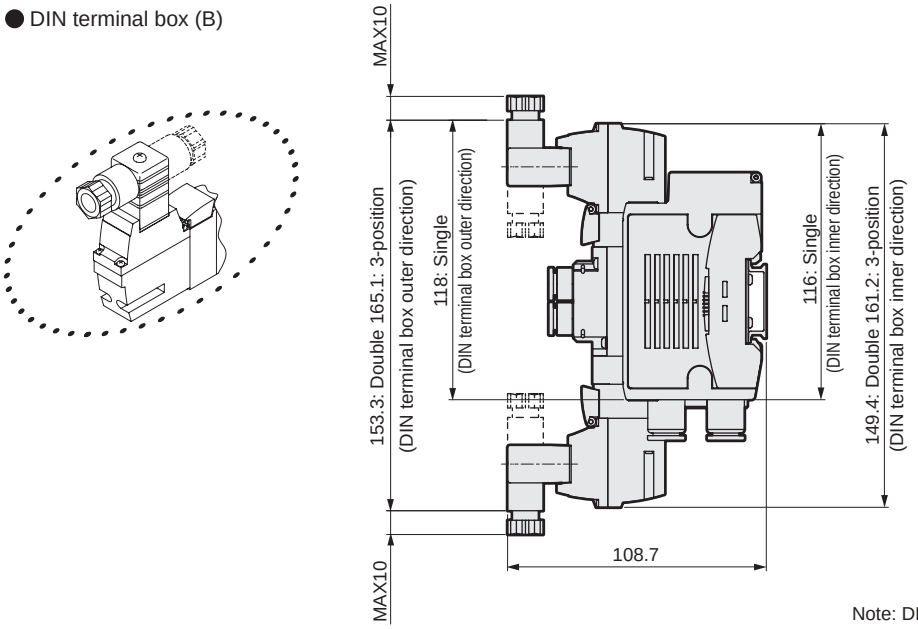

Note: DIN terminal box assembly is shipped facing inward.

* Refer to page 661 for dimensions of the supply and exhaust block push-in fitting.

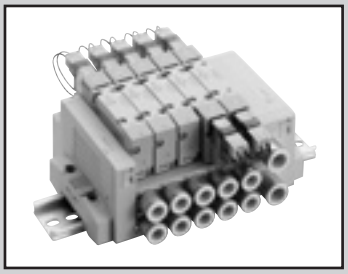

Individual wiring block manifold
Base piping

MN4GB1/2 Series

● Cylinder bore size: ø20 to ø80

JIS symbol

● 3-port valve

2-position single NC

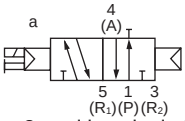

2-position single NO

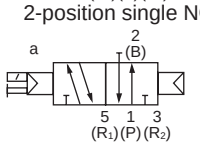

● Two 3-port valves integrated

(A side valve: NC, B side valve: NC)

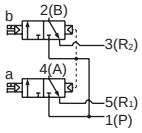

(A side valve: NC, B side valve: NO)

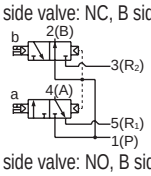

(A side valve: NO, B side valve: NC)

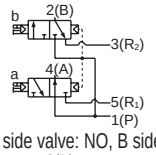

(A side valve: NO, B side valve: NO)

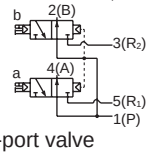

● 5-port valve

2-position single

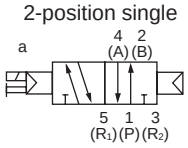

2-position double

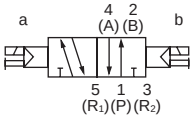

3-position all ports closed

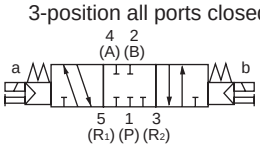

3-position A/B/R connection

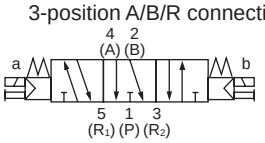

3-position P/A/B connection

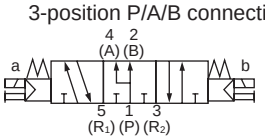

Structure and material restriction

	Structure	Material restriction			Model No.
P7 Series	Dust generation preventing				– P70
	Dust generation preventing	Copper-based materials prohibited	Silicon-based materials prohibited	Halogen-based materials prohibited (fluorine, chlorine, bromine)	– P74 Custom order product

Manifold common specifications

Item	Description
Manifold	Block manifold
Mounting method	DIN rail mount
Supply and exhaust method	Common supply/common exhaust (With internal exhaust check valve)
Pilot exhaust method	Main valve/pilot valve common exhaust (Pilot exhaust check valve built-in)
Piping direction	Lateral direction from base
Valve and operation	Pilot operated soft spool valve
Working fluid	Compressed air
Max. working pressure MPa	0.7
Min. working pressure MPa	0.2 (*3)
Proof pressure MPa	1.05
Ambient temperature °C	-5 to 55 (no freezing)
Fluid temperature °C	5 to 55
Manual override	Non-locking/locking common type (standard)
Lubrication (*1)	Not required
Degree of protection (*2)	Dust-proof
Vibration resistance m/s²	50 or less
Shock resistance m/s²	300 or less
Atmosphere	Cannot be used in corrosive gas environments

*1 Use turbine oil Class 1 ISO VG32 for lubrication.
Excessive or intermittent lubrication results in unstable operation.

*2 Avoid dripping water or oil, etc., during use. IP65 (jet-proof) applies for DIN terminal box specifications. However, the specified outer diameter of the applicable cord and tightening torque must be used for fixing in place.

*3 The working pressure range is 0 to 0.7 MPa when the external pilot (option code: K) is selected. Set the external pilot pressure between 0.2 to 0.7 MPa.

Electrical specifications

Item		Description					
Rated voltage V		24 DC	12 DC	5 DC	3 DC	100 AC	200 AC
Voltage fluctuation range		±10%					
Holding current A (*4)	Standard	0.015 (0.017)	0.030 (0.034)	0.072 (0.082)	0.120 (0.136)	0.009 (0.009)	0.006 (0.006)
	With low exoergic/energy circuit	0.005	0.010	-		-	
Power consumption W (*4)	Standard	0.35(0.40)		0.35(0.40)		-	
	With low exoergic/energy circuit	0.1		-		-	
Apparent power VA (*4)	Standard	-		-		0.93 (0.98)	1.40
Thermal class		B					
Surge suppressor		Option					
Indicator		Lamp (option)					

*4: Values in ( ) apply when lamp is included. In addition, the type with low exoergic/energy circuit is only available with lamp.

Individual specifications

Descriptions			MN3GB1/MN4GB1	MN3GB2/MN4GB2
Max. station No.			24 stations	20 stations
Port size	Metric fitting	A/B port	Barbed fitting ø1.8 Push-in fitting ø1.8, ø4, ø6	Push-in fitting ø4, ø6, ø8
		P/R port	Push-in fitting ø6, ø8	Push-in fitting ø8, ø10
	Inch fitting	A/B port	Push-in fitting ø1/8", ø5/32"	Push-in fitting ø1/4", ø5/16"
		P/R port	Push-in fitting ø1/4", ø5/16"	Push-in fitting ø5/16", ø3/8"

· For DIN rail mounting, refer to "Mounting orientation" on page 755.
· For weight, refer to page 642.

Performance/characteristics by model

Descriptions			MN3GB1/MN4GB1		MN3GB2/MN4GB2	
			ON	OFF	ON	OFF
Response time ms	Two 3-port valves integrated		9	12	12	29
	2-position	Single	12	12	19	19
		Double	9	-	18	-
	3-position	ABR connection	8	15	17	30

Values with lamp/surge suppressor are shown. The response time is the value with supply pressure of 0.5 MPa at 20°C and without lubrication. It depends on the pressure and the lubricant quality.

Flow characteristics

Model No.	Solenoid position		P→A/B		A/B→R1/R2	
			C[dm³/(s·bar)]	b	C[dm³/(s·bar)]	b
MN3GB1 MN4GB1	Two 3-port valves integrated		0.86	0.35	1.0 (0.66)	0.15 (0.25)
	2-position		1.0	0.30	1.1 (0.72)	0.11 (0.26)
	3-position	All ports closed	0.96	0.32	1.0 -	0.14 -
		ABR connection	0.96	0.29	1.2 (0.71)	0.11 (0.30)
		PAB connection	1.1	0.31	1.0 -	0.15 -
MN3GB2 MN4GB2	Two 3-port valves integrated		1.7	0.42	2.2 (1.6)	0.15 (0.19)
	2-position		2.4	0.35	2.5 (1.7)	0.19 (0.19)
	3-position	All ports closed	2.2	0.38	2.3 -	0.17 -
		ABR connection	2.2	0.38	2.5 (1.7)	0.18 (0.20)
		PAB connection	2.3	0.29	2.3 -	0.15 -

*1: Effective cross-sectional area S and sonic conductance C are converted as S ≈ 5.0 × C.
*2: Values in ( ) are with the exhaust check valve.

Ozone proof specifications • Coolant proof specifications

Can be selected with ”How to order” Item Ⓔ option “A” on page 641.

MN4GA2 Series

Individual wiring block manifold; base piping

How to order

Manifold model No.

MN4GA1 1 0R - C6 - E2 H - 10 - 3 - P70

3-port manifold model No.

MN3GA1 66 0R - C6 - E2 H - 10 - 3 - P70

Discrete valve block with solenoid valve

N4GA1 1 0R - C6 - E2 H — 3 - P70

Discrete 3-port valve block with solenoid valve

N3GA1 66 0R - C6 - E2 H — 3 - P70

Discrete solenoid valve

4GA1 1 9R - 00 - E2 H — 3 - P70

Discrete 3-port solenoid valve

3GA1 66 9R - 00 - E2 H — 3 - P70

- Ⓐ Model No.
- Ⓑ Solenoid position
- Ⓒ Port size (*1)(*2)(*3)
- Ⓓ Electrical connections
- Ⓔ Option
- Ⓕ Station No.
- Ⓖ Voltage
- Ⓗ Clean room specs

Note on selection guide

*1: Ports A and B plug specifications are available for 2-position single only. Specify the port P/R bore size with the supply and exhaust block model No. in the manifold specifications sheet.
*2: Ports A and B are the same size for L-type push-in fitting mix (CX).
*3: For a discrete solenoid valve, select "00" for Port size.
*4: This will be MN4GA*80R for a mix with 4, 5-port valves.Further, select MN3GB*80R when mixing with masking plate.
*5: Not compatible with combination with external pilot (K).Dimensions are the same as those of the respective 2-position double solenoid.
*6: Simultaneously select option "L" for types other than single solenoid.
*7: The push-in fitting cannot be mixed with the single valve's 4(A) or 2(B) port.
*8: Available only for single solenoids.

Code	Content		Ⓐ Model No. Manifold: Two 3-port valves integrated		5-port valve		Discrete valve block with solenoid valve/ discrete solenoid valve			
			MN3GB1	MN3GB2	MN4GB1	MN4GB2	(N)3GB1	(N)3GB2	(N)4GB1	(N)4GB2
Ⓑ Solenoid position										
1	2-position single				●	●			●	●
2	2-position double				●	●			●	●
3	3-position all ports closed				●	●			●	●
4	3-position ABR connection				●	●			●	●
5	3-position PAB connection				●	●			●	●
66	Two 3-port valves integrated (*4) (*5)	A side valve: Normally closed / B side valve: Normally closed	●	●			●	●		
67	Two 3-port valves integrated (*4) (*5)	A side valve: Normally closed / B side valve: Normally open	●	●			●	●		
76	Two 3-port valves integrated (*4) (*5)	A side valve: Normally open / B side valve: Normally closed	●	●			●	●		
77	Two 3-port valves integrated (*4) (*5)	A side valve: Normally open / B side valve: Normally open	●	●			●	●		
8	Mix manifold (for multiple solenoid positions)		●	●	●	●	●	●	●	●
Ⓒ Port size (A/B-port)										
Type	**Metric fitting/Rc thread**									
CF	ø1.8 barbed fitting (compatible tube UP-9102-**)		●		●		●		●	
C18	ø1.8 push-in fitting (compatible tube UP-9402-**)		●		●		●		●	
C4	ø4 push-in fitting		●	●	●	●	●	●	●	●
C6	ø6 push-in fitting		●	●	●	●	●	●	●	●
C8	ø8 push-in fitting			●		●		●		●
CL18	Radial ø1.8 push-in fitting upward (compatible tube UP-9402-**)	(*6)	●		●		●		●	
CL4	Radial ø4 push-in fitting (upward)	(*6)	●		●		●		●	
CL6	Radial ø6 push-in fitting (upward)	(*6)	●	●	●	●	●	●	●	●
CL8	Radial ø8 push-in fitting (upward)	(*6)		●		●		●		●
CD18	Radial ø1.8 push-in fitting downward (compatible tube UP-9402-**)		●		●		●		●	
CD4	Radial ø4 push-in fitting (downward)		●		●		●		●	
CD6	Radial ø6 push-in fitting (downward)		●	●	●	●	●	●	●	●
CD8	Radial ø8 push-in fitting (downward)			●		●		●		●
CX	Push-in fitting mix	(*7)	●	●	●	●				
Single, plug specs	A port	B port								
CFNC	ø1.8 barbed fitting (compatible tube UP-9102-**)	Plug			●				●	
C18NC	ø1.8 push-in fitting (compatible tube UP-9402-**)	Plug			●				●	
C4NC	ø4 push-in fitting	Plug			●	●			●	●
C6NC	ø6 push-in fitting	Plug			●	●			●	●
C8NC	ø8 push-in fitting	Plug				●				●
CFNO	Plug	ø1.8 barbed fitting (compatible tube UP-9102-**)			●				●	
C18NO	Plug	ø1.8 push-in fitting (compatible tube UP-9402-**)			●				●	
C4NO	Plug	ø4 push-in fitting			●	●			●	●
C6NO	Plug	ø6 push-in fitting			●	●			●	●
C8NO	Plug	ø8 push-in fitting				●				●
CL18NC	Radial ø1.8 push-in fitting upward (compatible tube UP-9402-**)	Plug			●				●	
CL4NC	Radial ø4 push-in fitting (upward)	Plug			●				●	
CL6NC	Radial ø6 push-in fitting (upward)	Plug			●	●			●	●
CL8NC	Radial ø8 push-in fitting (upward)	Plug				●				●
CL18NO	Plug	Radial ø1.8 push-in fitting upward (compatible tube UP-9402-**)			●				●	
CL4NO	Plug	Radial ø4 push-in fitting (upward)			●				●	
CL6NO	Plug	Radial ø6 push-in fitting (upward)			●	●			●	●
CL8NO	Plug	Radial ø8 push-in fitting (upward)				●				●
CD18NC	Radial ø1.8 push-in fitting downward (compatible tube UP-9402-**)	Plug			●				●	
CD4NC	Radial ø4 push-in fitting (downward)	Plug			●				●	
CD6NC	Radial ø6 push-in fitting (downward)	Plug			●	●			●	●
CD8NC	Radial ø8 push-in fitting (downward)	Plug				●				●
CD18NO	Plug	Radial ø1.8 push-in fitting downward (compatible tube UP-9402-**)			●				●	
CD4NO	Plug	Radial ø4 push-in fitting (downward)			●				●	
CD6NO	Plug	Radial ø6 push-in fitting (downward)			●	●			●	●
CD8NO	Plug	Radial ø8 push-in fitting (downward)				●				●
Type	**Inch fitting/inch thread**									
C3N	ø1/8" push-in fitting		●		●		●		●	
C4N	ø5/32" push-in fitting		●		●		●		●	
C6N	ø1/4" push-in fitting			●		●		●		●
C8N	ø5/16" push-in fitting			●		●		●		●
CL3N	Radial ø1/8" push-in fitting (upward)	(*8)	○		○		○		○	
CL4N	Radial ø5/32" push-in fitting (upward)	(*8)	○		○		○		○	
CL6N	Radial ø1/4" push-in fitting (upward)	(*8)		○		○		○		○
CL8N	Radial ø5/16" push-in fitting (upward)	(*8)		○		○		○		○
CXN	Push-in fitting mix	(*7)	●	●	●	●				
Single, plug specs	A port	B port								
C3NCN	ø1/8" push-in fitting	Plug			●				●	
C4NCN	ø5/32" push-in fitting	Plug			●				●	
C6NCN	ø1/4" push-in fitting	Plug				●				●
C8NCN	ø5/16" push-in fitting	Plug				●				●
C3NON	Plug	ø1/8" push-in fitting			●				●	
C4NON	Plug	ø5/32" push-in fitting			●				●	
C6NON	Plug	ø1/4" push-in fitting				●				●
C8NON	Plug	ø5/16" push-in fitting				●				●
CL3NCN	Radial ø1/8" push-in fitting (upward)	Plug			○				○	
CL4NCN	Radial ø5/32" push-in fitting (upward)	Plug			○				○	
CL6NCN	Radial ø1/4" push-in fitting (upward)	Plug				○				○
CL8NCN	Radial ø5/16" push-in fitting (upward)	Plug				○				○
CL3NON	Plug	Radial ø1/8" push-in fitting (upward)			○				○	
CL4NON	Plug	Radial ø5/32" push-in fitting (upward)			○				○	
CL6NON	Plug	Radial ø1/4" push-in fitting (upward)				○				○
CL8NON	Plug	Radial ø5/16" push-in fitting (upward)				○				○
00	Discrete valve for mounting base						●	●	●	●

is not available. ○ indicates a custom order.

[Options, stations, voltage, electrical connection list]

Code	Description		Ⓐ Model No. Manifold: Two 3-port valves integrated MN3GB1	MN3GB2	5-port valve MN4GB1	MN4GB2	Discrete valve block with solenoid valve/ discrete solenoid valve (N)3GB1	(N)3GB2	(N)4GB1	(N)4GB2
Ⓓ Electrical connections										
Blank	Grommet lead wire (300 mm)	(*19)	●	●	●	●	●	●	●	●
B	DIN terminal box (Pg7)	With surge suppressor/lamp (*17) (*22)		●		●		●		●
BN	DIN terminal box (Pg7) (no terminal box)	With surge suppressor/lamp (*17) (*22)		●		●		●		●
E-connector (upward/lateral direction common)										
E0	Lead wire (300 mm)	(*21)	●	●	●	●	●	●	●	●
E00	Lead wire (500 mm)	(*21)	●	●	●	●	●	●	●	●
E01	Lead wire (1000 mm)	(*21)	●	●	●	●	●	●	●	●
E02	Lead wire (2000 mm)	(*21)	●	●	●	●	●	●	●	●
E03	Lead wire (3000 mm)	(*21)	●	●	●	●	●	●	●	●
E0N	Without lead wire (no socket)	(*21)	●	●	●	●	●	●	●	●
E1	Without lead wire (socket/terminal included)	(*21)	●	●	●	●	●	●	●	●
E2	Lead wire (300 mm)	With surge suppressor/lamp	●	●	●	●	●	●	●	●
E20	Lead wire (500 mm)	With surge suppressor/lamp	●	●	●	●	●	●	●	●
E21	Lead wire (1000 mm)	With surge suppressor/lamp	●	●	●	●	●	●	●	●
E22	Lead wire (2000 mm)	With surge suppressor/lamp	●	●	●	●	●	●	●	●
E23	Lead wire (3000 mm)	With surge suppressor/lamp	●	●	●	●	●	●	●	●
E2N	Without lead wire (without socket)	With surge suppressor/lamp	●	●	●	●	●	●	●	●
E3	Without lead wire (with socket/terminal)	With surge suppressor/lamp	●	●	●	●	●	●	●	●
EJ-connector (socket with cover, upward/lateral direction common)										
E01J	Lead wire (1000 mm)	(*21)	●	●	●	●	●	●	●	●
E02J	Lead wire (2000 mm)	(*21)	●	●	●	●	●	●	●	●
E03J	Lead wire (3000 mm)	(*21)	●	●	●	●	●	●	●	●
E21J	Lead wire (1000 mm)	With surge suppressor/lamp	●	●	●	●	●	●	●	●
E22J	Lead wire (2000 mm)	With surge suppressor/lamp	●	●	●	●	●	●	●	●
E23J	Lead wire (3000 mm)	With surge suppressor/lamp	●	●	●	●	●	●	●	●
Ⓔ Option										
Blank	Non-locking/locking common manual override		●	●	●	●	●	●	●	●
M	Non-locking manual override		●	●	●	●	●	●	●	●
H	With exhaust check valve	(*12)	●	●	●	●	●	●	●	●
K	External pilot	(*10)			●	●			●	●
A	Ozone/coolant proof		●	●	●	●	●	●	●	●
S	Surgeless	(*14)	●	●	●	●	●	●	●	●
E	Low exoergic/energy saving circuit	(*11) (*15)	●	●	●	●	●	●	●	●
L	With pipe adapter		●	●	●	●	●	●	●	●
F	A/B port filter integrated	(*16)	●	●	●	●	●	●	●	●
Z1	Air supply spacer	(*17)	●	●	●	●				
Z3	Exhaust spacer	(*17)	●	●	●	●				
Ⓕ Station No.										
1	1 station		●	●	●	●				
to	to									
24	24 stations (max. station No. for MN4GB2 is 20)									
Ⓖ Voltage										
1	100 VAC (rectifier integrated)		●	●	●	●	●	●	●	●
2	200 VAC (rectifier integrated)	(*18)		●		●		●		●
3	24 VDC		●	●	●	●	●	●	●	●
4	12 VDC		●	●	●	●	●	●	●	●
7	3 VDC		○	○	○	○	○	○	○	○
8	5 VDC		○	○	○	○	○	○	○	○

Ⓗ Clean room specifications (*9, 10, 11)										
	Structure	Material restriction								
P70	Exhaust treatment	—	●	●	●	●	●	●	●	●
P74	Exhaust treatment	Copper-based/silicon-based/halogen-based materials (fluorine, chlorine, bromine) are prohibited.	○	○	○	○	○	○	○	○

is not available.
○ indicates made to order.

*9: Combination of Item A (ozone-proof) and Item H clean-room specifications P74 is not supported.
*10: Copper-, silicon-, and halogen-free specifications are available with support for the main valve section.
*11: The P74 Series is made to order.
***12: 3-position all ports closed and P A B connection are not provided with the exhaust check valve (H). Refer to page 751 for details on the exhaust check valve.**
*13: Consult with CKD when using a vacuum with the external pilot (K).
14: E2 type and E2*J type connectors and DC12/24V only are supported. In addition, surgeless "S" and low exoergic/energy circuit "E" cannot be selected together.
*15: Surgeless specifications.
*16: A filter is built into the port as standard.
***17: Specify the spacer mounting position/quantity in the manifold specifications sheet. Stacking of spacers is not possible.Combination with the masking plate is not supported. Only single solenoid can be selected together with radial push-in fitting (upward). Refer to pages 693 to 696 for details.**
*18: DIN terminal box only is supported.
*19: The grommet lead wire specifications are compatible with DC voltage only.
*20: AC voltage and DC12/24V are supported. In addition, a lamp comes with the terminal box.
*21: AC voltage is with a rectifier circuit.
*22: Terminal box is EN175301-803Type C (old DIN 43650-C) compliant product. Refer to page 756 for details.

Manifold components explanation and parts list

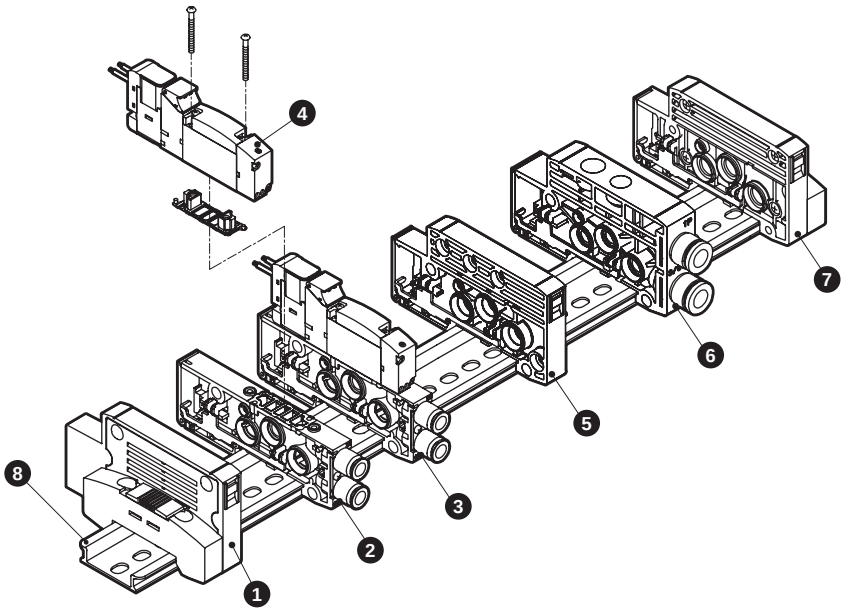

List of main components (refer to pages 682 to 698 for details)

No.	Component name	Model No. (example)	No.	Component name	Model No. (example)
1	End block L	N4G1R-EL-P70	5	Partition block	N4G1R-S-P70/P74
2	Discrete valve block	N4GB1R-V1-C6-P70/P74	6	Supply and exhaust block	N4G1R-Q-8-P70/P74
3	Discrete valve block with solenoid valve	N4GB110R-C6-H-3-P70/P74	7	End block R	N4G1R-ER-P70/P74
4	Solenoid valve body	4GB119R-00-H-3-P70/P74	8	DIN rail	N4GR-BAA (Length)-P70

B type individual wiring weight

4GB1

(g)

Part name	Model No.	Weight	Part name	Model No.	Weight
Valve block with solenoid valve	N4GB110R-C6	67	Supply and exhaust block	N4G1R-Q-8	58
	N4GB120R-C6	84		N4G1R-QK-8	60
	N4GB1 $\frac{3}{5}$ 0R-C6	85	End block	N4G1R-E*	60
	N3GB1660R-C6-3	84		N4G1R-EX*	60
Valve block with masking plate	N4GB1R-MP-C6	37	Partition block	N4G1R-S	45
			Valve block	N4GB1R-V1-C*	33
			DIN rail	N4GR-BAA (Length)	0.19/mm

4GB2

(g)

Part name	Model No.	Weight	Part name	Model No.	Weight
Valve block with solenoid valve	N4GB210R-C8	128	Supply and exhaust block	N4G2R-Q-10	83
	N4GB220R-C8	145		N4G2R-QK-10	85
	N4GB2 $\frac{3}{5}$ 0R-C8	156	End block	N4G2R-E*	84
	N3GB2660R-C8-3	145		N4G2R-EX*	85
Valve block with masking plate	N4GB2R-MP-C8	69	Partition block	N4G2R-S	60
			Valve block	N4GB2R-V1-C*	55
			DIN rail	N4GR-BAA (Length)	0.19/mm

Parts list

Applicable	Part name		Model No.
Valve 4G1	ø1.8 barbed		4G1R-JOINT-CF-P70
	ø1.8 straight		4G1R-JOINT-C18-P70
	ø4 straight		4G1R-JOINT-C4-P70
	ø6 straight		4G1R-JOINT-C6-P70
	ø1.8 elbow		4G1R-JOINT-CL18,CLL18-P70
	ø4 elbow		4G1R-JOINT-CL4,CLL4-P70
	ø6 elbow		4G1R-JOINT-CL6,CLL6-P70
	ø1/8” straight		4G1R-JOINT-C3N-P70
	ø5/32” straight		4G1R-JOINT-C4N-P70
	ø1/8” elbow	*1	4G1R-JOINT-CL3N-P70
	ø5/32” elbow	*1	4G1R-JOINT-CL4N-P70
	Plug cartridge		4G1R-JOINT-CPG-P70
Valve 4G2	ø4 straight		4G2R-JOINT-C4-P70
	ø6 straight		4G2R-JOINT-C6-P70
	ø8 straight		4G2R-JOINT-C8-P70
	ø6 elbow		4G2R-JOINT-CL6,CLL6-P70
	ø8 elbow		4G2R-JOINT-CL8,CLL8-P70
	ø1/4” straight		4G2R-JOINT-C6N-P70
	ø5/16” straight		4G2R-JOINT-C8N-P70

Applicable	Part name		Model No.
Valve 4G2	ø1/4” elbow	*1	4G2R-JOINT-CL6N-P70
	ø5/16” elbow	*1	4G2R-JOINT-CL8N-P70
	Plug cartridge		4G2R-JOINT-CPG-P70
Common	Coil assembly		4GR-[*1]-[*2]-COIL-[*3]-P70 *1: Electrical connections (blank, B, E0, ...), *2: Ozone/coolant proof (blank, A) Surgeless (S) Low exoergic/energy circuit (E) External pilot (K) *3: Voltage (1, 2, 3, 4)
	E type connector socket assembly		4GR-SOCKET-ASSY-[*1]-[*3]-P70 *1: Electrical connections (E0, E00, ...), *3: Voltage (1, 3, 4)
	EJ type connector socket assembly		4GR-SOCKET-ASSY-[*1]-P70 *1: Electrical connections (E01J, E02J, ...)
Valve 4G2	DIN terminal box assembly		4GR-TERMINAL-BOX-[*3]-P70 *3: Voltage (1, 2, 3, 4)

*1: Available as custom order.

Dimensions

MN4GB1-P7*

* For the 2-position single 3-port valve, either A port or B port is a plug. In addition, the two 3-port valve integrated have the same dimensions as the double model.

● Grommet lead wire (blank)

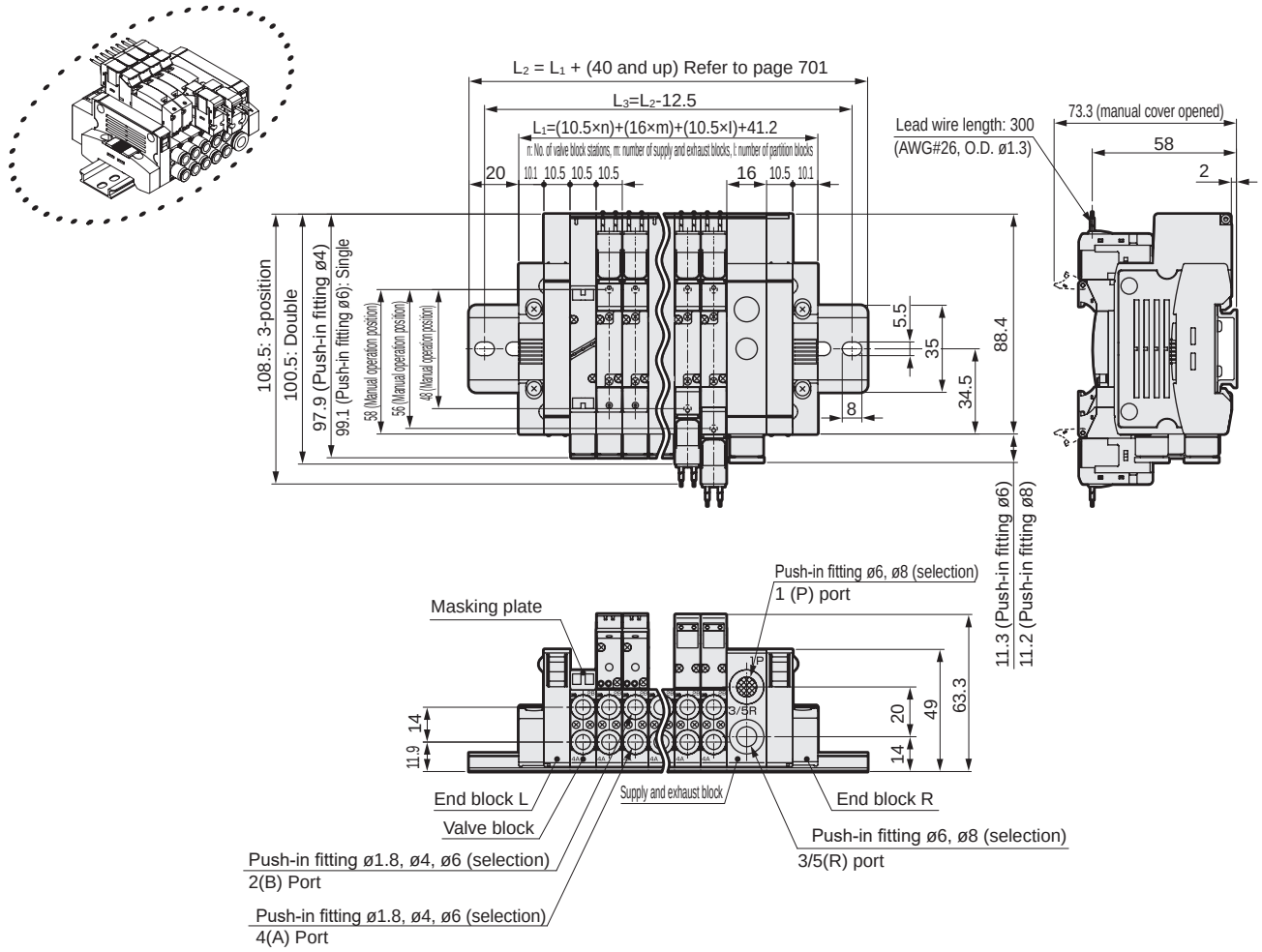

● E type connector (E)

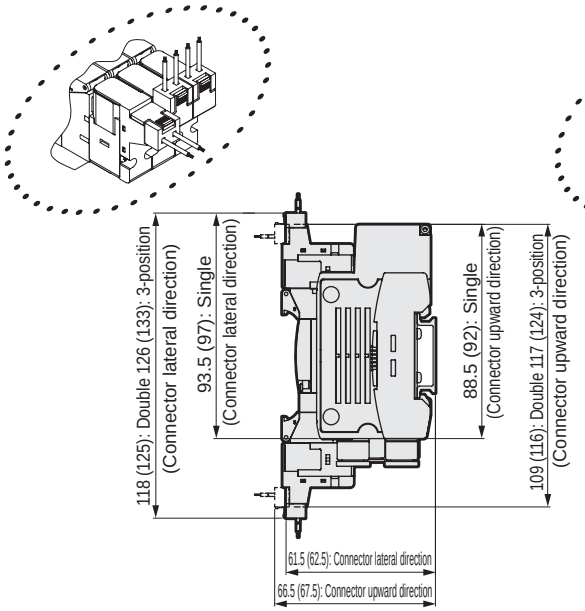

Note: Values in ( ) are for AC voltage.

● EJ type connector (E**J)

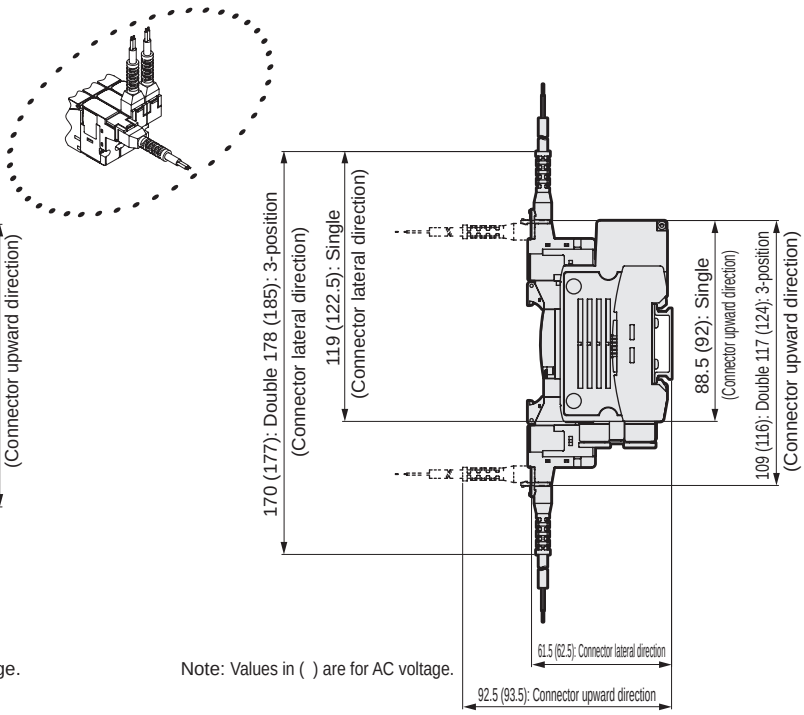

Note: Values in ( ) are for AC voltage.

* Refer to page 676 for dimensions of the valve block push-in fitting and supply and exhaust block push-in fitting.

Dimensions

MN4GB2-P7*

● Grommet lead wire (blank)

* For the 2-position single 3-port valve, either A port or B port is a plug. In addition, the two 3-port valve integrated have the same dimensions as the double model.

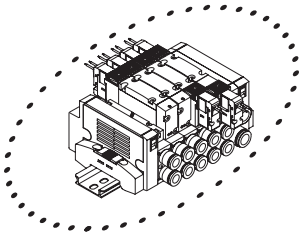

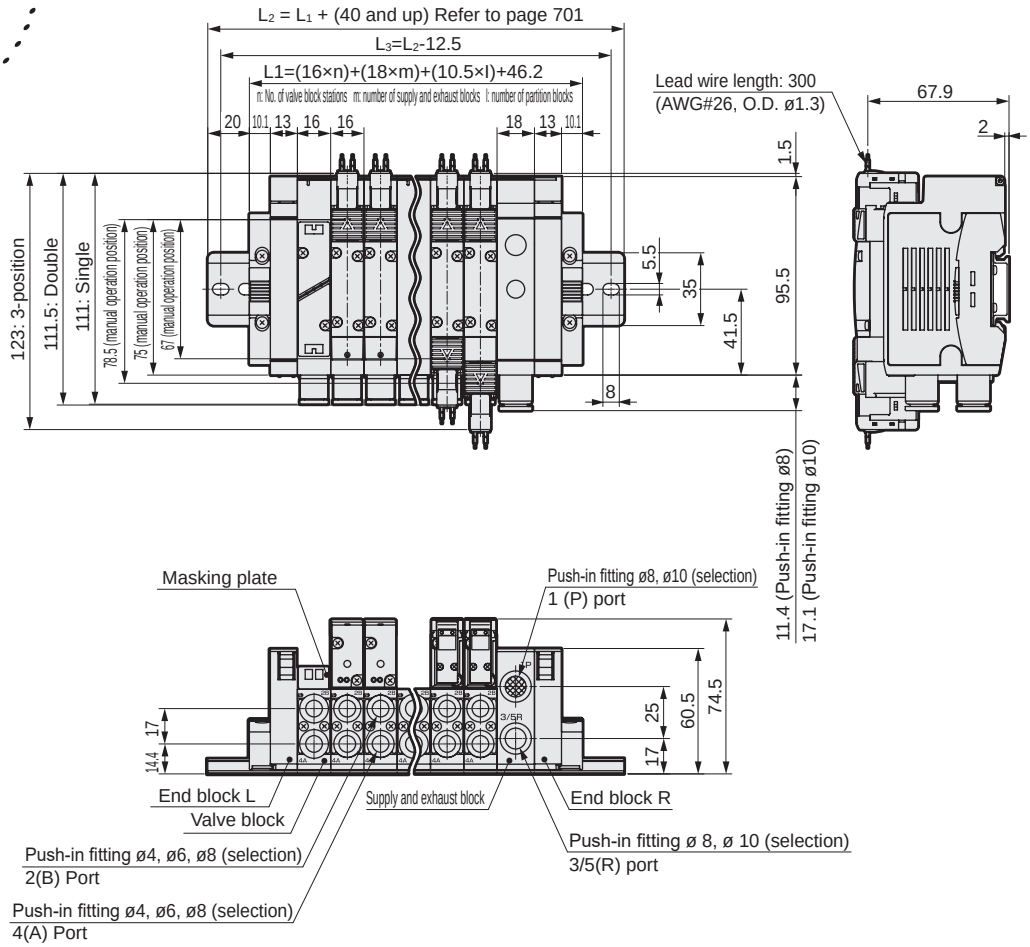

* Refer to page 678 for dimensions of the valve block push-in fitting and supply and exhaust block push-in fitting.

Dimensions

● E type connector (E)

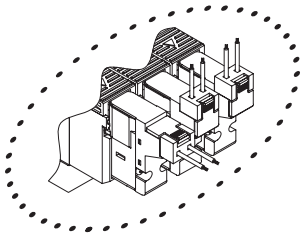

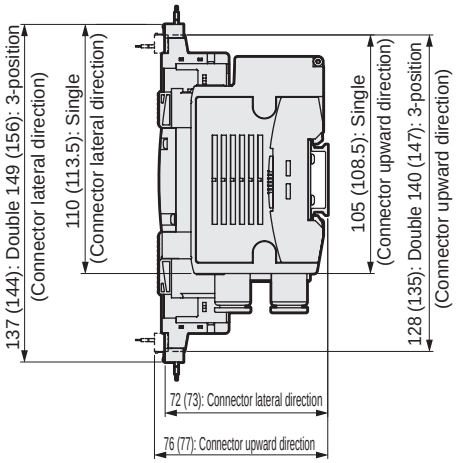

Note: Values in ( ) are for AC voltage.

● EJ type connector (E**J)

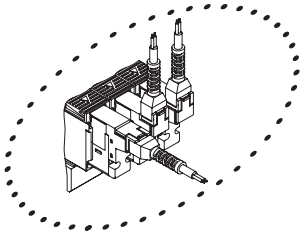

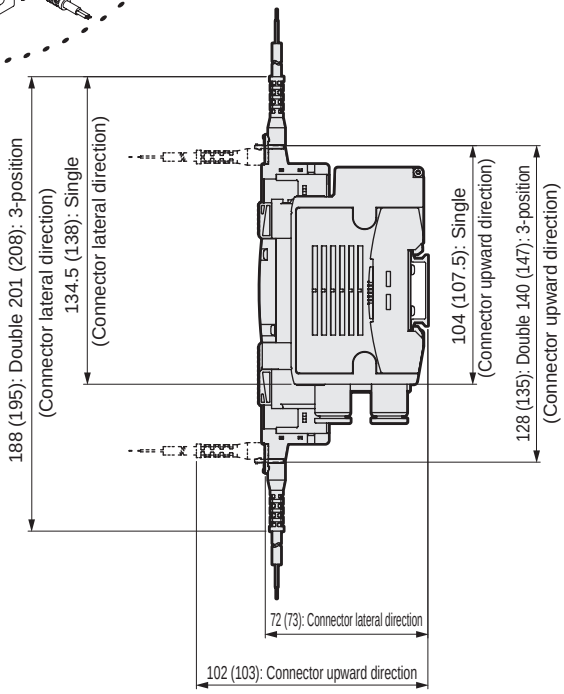

Note: Values in ( ) are for AC voltage.

● DIN terminal box (B)

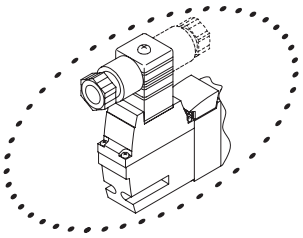

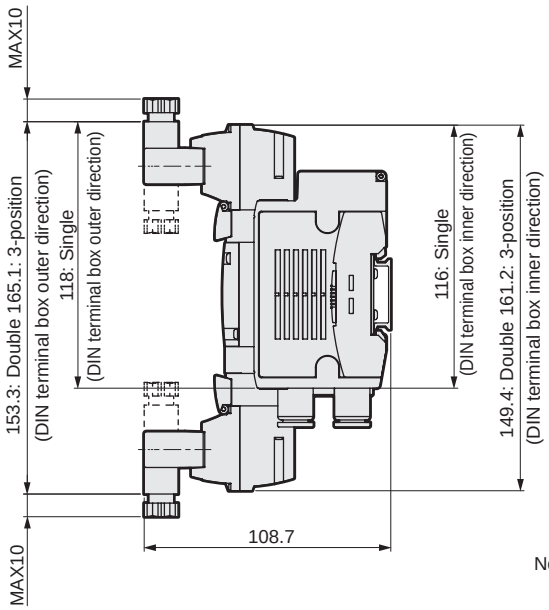

Note: DIN terminal box assembly is shipped facing inward.

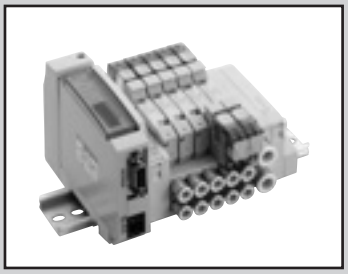

Reduced wiring block manifold
Base piping

MN4GA1/2-T* Series

● Applicable cylinder bore size: ø20 to ø80

RoHS CAD

JIS symbol

● 3-port valve
2-position single NC

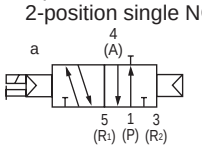

2-position single NO

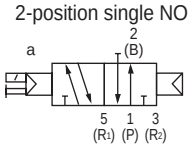

● Dual 3-port valve integrated
(A side valve: NC, B side valve: NC)

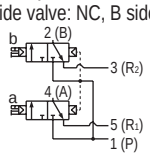

(A side valve: N.C., B side valve: NO)

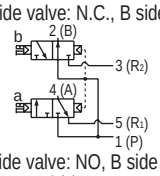

(A side valve: NO, B side valve: NC)

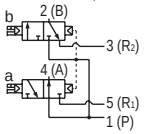

(A side valve: NO, B side valve: NO)

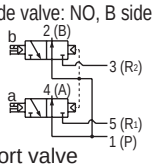

● 5-port valve
2-position single

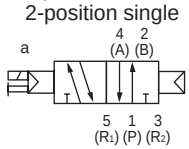

2-position double

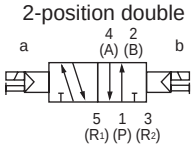

3-position
All ports closed

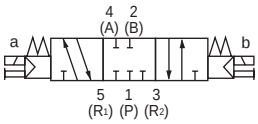

3-position A/B/R connection

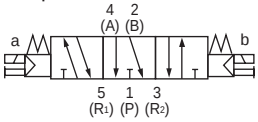

3-position P/A/B connection

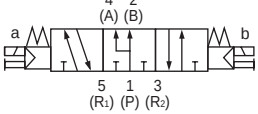

Structure and material restriction

	Structure	Material restriction			Model No.
P7 Series	Dust generation preventing				– P70
	Dust generation preventing	Copper-based materials prohibited	Silicon-based materials prohibited	Halogen-based materials prohibited (fluorine, chlorine, bromine)	– P74 Custom order product

Manifold common specifications

Item	Description
Manifold	Block manifold
Mounting method	DIN rail mount
Supply and exhaust method	Common supply/common exhaust (With internal exhaust check valve)
Pilot exhaust method	Main valve/pilot valve common exhaust (Pilot exhaust check valve built-in)
Piping direction	Valve top direction
Valve and operation	Pilot operated soft spool valve
Working fluid	Compressed air
Max. working pressure MPa	0.7
Min. working pressure MPa	0.2 (*3)
Proof pressure MPa	1.05
Ambient temp °C	-5 to 55 (no freezing)
Fluid temp °C	5 to 55
Manual override	Non-locking/locking common (standard)
Lubrication (*1)	Not required
Degree of protection (*2)	Dust-proof
Vibration resistance m/s²	50 or less
Shock resistance m/s²	300 or less
Atmosphere	Cannot be used in corrosive gas environments

Electrical specifications

Item		Description		
Rated voltage V		T1□, T30□, T5□		T6G1, T7□, T8□
		24 DC	12 DC	24 DC
Voltage fluctuation range (*4)		±10%		+10%, -5%
Holding current A	Standard	0.017	0.034	0.017
	With low exoergic/energy saving circuit	0.005	0.010	0.005
Power consumption W	Standard	0.4		
	With low exoergic/energy saving circuit	0.1		
Thermal class		B		
Surge suppressor (*5)		Zener diode		
Indicator		LED		

*1 Use turbine oil Class 1 ISO VG32 for lubrication. Excessive or intermittent lubrication results in unstable operation.
*2 Dust-proof degree of protection. Not drip-proof. Avoid dripping water or oil, etc., during use.
*3 The working pressure range is 0 to 0.7 MPa when the external pilot (option code: K) is selected. Set the external pilot pressure between 0.2 and 0.7 MPa.
*4 T6G1, T7□ and T8□ (serial transmission) may experience voltage drops due to internal circuitry, so care should be taken when regulating voltages.
*5 If low exoergic/energy circuit or surgeless types are selected then there will be a diode.

Individual specifications

Item			MN3GA1/MN4GA1									
			T10	T11	T30	T50	T51	T52	T53	T6G1	T7*1	T8*1/2
Max. station No.	Standard wiring		16 stations	24 stations	24 stations	16 stations	18 stations	8 stations	24 stations	16 stations	8/16 stations	16/24 stations
	Double wiring		8 stations	12 stations	12 stations	8 stations	9 stations	4 stations	12 stations	8 stations	4/8 stations	8/16 stations
Max. number of solenoids			16 points	24 points	24 points	16 points	18 points	8 points	24 points	16 points	8/16 points	16/32 points
Port size	Metric fitting/ M5, Rc thread	A/B port	Barbed fitting ø1.8 push-in fitting ø1.8, ø4, ø6 M5									
		P/R port	Push-in fitting ø6, ø8									
	Inch fitting/M5, NPT thread	A/B port	Push-in fitting ø1/8", ø5/32" M5									
		P/R port	Push-in fitting ø1/4", ø5/16"									
	Metric fitting, G thread	A/B port	-									
		P/R port	-									

Item			MN3GA2/MN4GA2									
			T10	T11	T30	T50	T51	T52	T53	T6G1	T7*1	T8*1/2
Max. station No.	Standard wiring		16 stations	20 stations	20 stations	16 stations	18 stations	8 stations	20 stations	16 stations	8/16 stations	16/20 stations
	Double wiring		8 stations	12 stations	12 stations	8 stations	9 stations	4 stations	12 stations	8 stations	4/8 stations	8/16 stations
Max. number of solenoids			16 points	24 points	24 points	16 points	18 points	8 points	24 points	16 points	8/16 points	16/32 points
Port size	Metric fitting/ M5, Rc thread	A/B port	Push-in fitting ø4, ø6, ø8, Rc1/8									
		P/R port	Push-in fitting ø8, ø10									
	Inch fitting/M5, NPT thread	A/B port	Push-in fitting ø1/4", ø5/16", NPT1/8									
		P/R port	Push-in fitting ø5/16", ø3/8"									
	Metric fitting, G thread	A/B port	G1/8									
		P/R port	Push-in fitting ø8, ø10									

· For weight, refer to page 650.

Flow characteristics

Model No.	Solenoid position		P→A/B		A/B→R1/R2	
			C[dm³/(s·bar)]	b	C[dm³/(s·bar)]	b
MN3GA1 MN4GA1	Two 3-port valves integrated		0.87	0.37	1.0 (0.68)	0.14 (0.22)
	2-position		0.98	0.33	1.2 (0.71)	0.11 (0.27)
	3-position	All ports closed	0.92	0.34	1.0 -	0.16 -
		ABR connection	0.92	0.29	1.1 (0.69)	0.13 (0.22)
		PAB connection	1.1	0.35	1.1 -	0.17 -
MN3GA2 MN4GA2	Two 3-port valves integrated		1.7	0.37	2.2 (1.6)	0.13 (0.21)
	2-position		2.2	0.21	2.5 (1.7)	0.19 (0.10)
	3-position	All ports closed	2.0	0.25	2.3 -	0.10 -
		ABR connection	2.0	0.27	2.5 (1.7)	0.18 (0.12)
		PAB connection	2.3	0.31	2.3 -	0.16 -

*1: Effective cross-sectional area S and sonic conductance C are converted as S ≈ 5.0 × C.
*2: Values in ( ) are with the exhaust check valve.

Reduced wiring specifications

Item	T10	T11	T30	T50	T51	T52	T53
Type	Common terminal block M3 thread	Common terminal block clamping	D-sub-connector	20-pin flat cable connector (with power supply terminal)	20-pin flat cable connector, no power supply terminal	10-pin flat cable connector, no power supply terminal	26-pin flat cable connector, no power supply terminal
Connector	—	—	D-sub-connector 25-pin	MIL-C-83503 standard compliant pressure welding socket 20-pin	MIL-C-83503 standard compliant pressure welding socket 20-pin	MIL-C-83503 standard compliant pressure welding socket 10-pin	MIL-C-83503 standard compliant pressure welding socket 26-pin

Serial transmission slave unit specifications

* The communication setting file can be downloaded from the CKD website (https://www.ckd.co.jp/en/).

Item		T6G1
Network name		CC-Link ver. 1.10
Power supply voltage	Unit side	24 VDC ±10%
	Valve side	24 VDC +10%, -5%
Current consumption	Unit side	100 mA or less (when all output points are ON)
	Valve side	15 mA or less (when all output points are OFF)
No. of I/O points		16 points
Occupied number		1 station
Operation display		LED (power supply and communication status)
Output		NPN

Item		T7G1	T7L1 *1	T7D1	T7S1	T7SP1
Network name		CC-Link ver. 1.10	SAVE NET	DeviceNet *2	CompoNet	
Power supply voltage	Unit side	24 VDC +10%, -5% Common power supply terminal				
	Valve side					
	Unit side	—	—	11 to 25 VDC *3	14.0 to 26.4 VDC	
Current consumption	Unit side	110 mA or less (when all output points are ON) Load current is not included			40 mA or less (when all output points are ON) Load current is not included	
	Valve side					
	Unit side	—	—	50 mA or less	65 mA or less (all points ON: 24 VDC) 95 mA or less (all points ON: 14 VDC)	
No. of I/O points		16 points	16 points	16 points	16 points	
Occupied number		1 station	1 station	2 bytes	Word slave 1 node (16 points)	
Operation display		LED (power supply and communication status)				
Output		NPN			NPN	PNP

Item		T8G1	T8GP1	T8P1	T8PP1	T8EC1	T8ECP1	T8EN1	T8ENP1	T8D1	T8DP1	T8EB1	T8EBP1	T8EF1	T8EFP1	T8EP1	T8EPP1	T8KC1	T8KCP1
		T8G2	T8GP2	T8P2	T8PP2	T8EC2	T8ECP2	T8EN2	T8ENP2	T8D2	T8DP2	T8EB2	T8EBP2	T8EF2	T8EFP2	T8EP2	T8EPP2	T8KC2	T8KCP2
Communication protocol		CC-Link ver. 1.10		PROFIBUS-DP (V0)		EtherCAT		EtherNet/IP		DeviceNet		CC-Link IEF Basic		CC-Link IE Field		PROFINET		IO-Link	
Power supply voltage	Unit side	24 VDC ±10% (only the T8D* is 11 to 25 VDC)																	
	Valve side	24 VDC +10%, -5%																	
Current consumption	Unit side	60 mA or less (when all output points are ON)		60 mA or less (when all output points are ON)		110 mA or less (when all output points are ON)		120 mA or less (when all output points are ON)		70 mA or less (when all output points are ON)		130 mA or less (when all output points are ON)		140 mA or less (when all output points are ON)		130 mA or less (when all output points are ON)		50 mA or less (when all output points are ON)	
	Valve side	T8□1: 15 mA or less T8□2: 20 mA or less (When all output points are ON) Load current is not included								15 mA or less (When all output points are ON) Load current is not included									
No. of I/O points		T8□1: 16 points T8□2: 32 points																	
Occupied number		1 station																	
Operation display		LED (power supply and communication status)																	
Output		NPN output	PNP output	NPN output	PNP output	NPN output	PNP output	NPN output	PNP output	NPN output	PNP output	NPN output	PNP output	NPN output	PNP output	NPN output	PNP output	NPN output	PNP output

*1 Transmission bit rate of 128 bits and half-duplex transmission method are supported. Contact CKD for other specifications.
*2 DeviceNet compliant networks (DLNK, etc.) are supported as well.
*3 Communication power supply (V+ and V- of DeviceNet cable) is isolated from power supply terminals (unit power supply/valve power supply).

MN4GA1/2-T* Series

Reduced wiring block manifold; base piping

How to order

Manifold model No.

MN4GA1 1 0 R - C6 - T30 W H - 10 - 3 - P70

● 3-port manifold model No.

MN3GA1 1 0 R - C6 - T30 W H - 10 - 3 - P70

● Discrete valve block with solenoid valve

N4GA1 1 0 R - C6 - A2N *1 H — 3 - P70

● Discrete 3-port valve block with solenoid valve

N3GA1 1 0 R - C6 - A2N *1 H — 3 - P70

* When a cable is required, refer to page 686 and specify the cable length for "*1". When a cable is not required, leave the space blank.

● Discrete solenoid valve

4GA1 1 9 R - C6 - A2N H — 3 - P70

● Discrete 3-port solenoid valve

3GA1 1 9 R - C6 - A2N H — 3 - P70

Ⓐ Model No. Ⓑ Solenoid position Ⓒ Port size (*1) Ⓓ Reduced wiring connection, serial transmission Ⓔ Terminal/ connector pin array Ⓕ Option Ⓖ Station No. Ⓗ Voltage Ⓘ Clean room specs

⚠ Precautions for model selection

*1 : Specify the P/R port bore size with the supply and exhaust block model No. in the manifold specifications sheet.
*2 : Select MN4GA*80R when mixing with 4, 5-port valves. Further, select MN3GA*80R when mixing with masking plate.
*3 : Not compatible with combination with external pilot (K). Dimensions are the same as those of the respective 2-position double solenoid.
*4 : The push-in fitting cannot be mixed with the discrete valve's 4(A) or 2(B) port.
5 : Blank: The wiring will be based on the type of valve used. W: All wired for double solenoid valves regardless of the type of valve used.
***6 : Spare wiring (A type socket assembly) is included on the cap side for single types. A holder for retaining the socket assembly is included for single unit valves (A2N). Refer to page 697 for details.**
***7 : 3-position all ports closed and PAB connection are not provided with the exhaust check valve (H). Refer to page 751 for details on the exhaust check valve.**
*8 : Contact CKD when using a vacuum with the external pilot (K).
*9 : Surgeless "S" and low exoergic/energy circuit "E" cannot be selected together.
*10 : Surgeless specifications.
*11 : A filter is built into the P port as standard.
***12 : Specify the spacer mounting position and quantity in manifold specifications sheet. Stacking of spacers is not possible. Combination with the masking plate is not supported. Refer to pages 693 to 696 for details.**
*13 : A (ozone-proof) and Item Ⓘ (clean-room specifications). Not compatible with combination with P74.
*14 : Copper-, silicon-, and halogen-free specifications are available as main valve part support.
*15 : P74 Series is made to order.

Ⓐ Model No.

Code	Content		MN3GA1 (Manifold, 3-port valve)	MN3GA2 (Manifold, 3-port valve)	MN4GA1 (Manifold, 5-port valve)	MN4GA2 (Manifold, 5-port valve)	(N)3GA1 (Discrete valve block with solenoid valve/ Discrete solenoid valve)	(N)3GA2	(N)4GA1	(N)4GA2
Ⓑ Solenoid position										
1	2-position single				●	●			●	●
2	2-position double				●	●			●	●
3	3-position all ports closed				●	●			●	●
4	3-position ABR connection				●	●			●	●
5	3-position PAB connection				●	●			●	●
1	2-position single normally closed	(*2)	●	●			●	●		
11	2-position single normally open	(*2)	●	●			●	●		
66	Two 3-port valves integrated (*2) (*3)	A side valve: Normally closed / B side valve: Normally closed	●	●			●	●		
67		A side valve: Normally closed / B side valve: Normally open	●	●			●	●		
76		A side valve: Normally open / B side valve: Normally closed	●	●			●	●		
77		A side valve: Normally open / B side valve: Normally open	●	●			●	●		
8	Mix manifold (for multiple solenoid positions)		●	●	●	●	●	●	●	●
Ⓒ Port size (A/B-port)										
Code	Metric fitting/Rc thread									
CF	ø1.8 barbed fitting (compatible tube UP-9102-**)		●		●		●		●	
C18	ø1.8 push-in fitting (compatible tube UP-9402-**)		●		●		●		●	
C4	ø4 push-in fitting		●	●	●	●	●	●	●	●
C6	ø6 push-in fitting		●	●	●	●	●	●	●	●
C8	ø8 push-in fitting			●		●		●		●
CX	Push-in fitting mix	(*4)	●	●	●	●				
M5	M5		●		●		●		●	
06	Rc1/8			●		●		●		●
Code	Inch fitting/inch thread									
C3N	ø1/8" push-in fitting		●		●		●		●	
C4N	ø5/32" push-in fitting		●		●		●		●	
C6N	ø1/4" push-in fitting			●		●		●		●
C8N	ø5/16" push-in fitting			●		●		●		●
CXN	Push-in fitting mix	(*4)	●	●	●	●				
06N	NPT1/8			●		●		●		●
Code	G thread									
06G	G1/8			●		●		●		●
Ⓓ Reduced wiring connection, serial transmission										
Refer to the next page for reduced wiring and serial transmission.										
Ⓔ Terminal/connector pin array										
Blank	Standard wiring	(*5)	●	●	●	●	●	●	●	●
W	Double wiring	(*5)	●	●	●	●	●	●	●	●
W1	Double wiring (with single spare wiring)	(*5) (*6)	●	●	●	●	●	●	●	●
Ⓕ Option										
Blank	Non-locking/locking common manual override		●	●	●	●	●	●	●	●
M	Non-locking manual override		●	●	●	●	●	●	●	●
H	With exhaust check valve	(*7)	●	●	●	●	●	●	●	●
K	External pilot	(*8)	●	●	●	●	●	●	●	●
A	Ozone/coolant proof		●	●	●	●	●	●	●	●
S	Surgeless	(*9)	●	●	●	●	●	●	●	●
E	Low exoergic/energy circuit	(*9) (*10)	●	●	●	●	●	●	●	●
Q	Reduced wiring duct		●	●	●	●	●	●	●	●
F	A/B port filter built in	(*11)	●	●	●	●	●	●	●	●
Z1	Air supply spacer	(*12)	●	●	●	●				
Z3	Exhaust spacer	(*12)	●	●	●	●				
Ⓖ Station No.										
1	1 station		●	●	●	●				
to	to									
24	24 stations (Refer to page 646 for the max. station number per model)									
Ⓗ Voltage										
3	24 VDC		●	●	●	●	●	●	●	●
4	12 VDC		●	●	●	●	●	●	●	●

Ⓘ Clean room specifications (*13, 14, 15)

	Structure	Material restriction	MN3GA1	MN3GA2	MN4GA1	MN4GA2	(N)3GA1	(N)3GA2	(N)4GA1	(N)4GA2
P70	Exhaust treatment	—	●	●	●	●	●	●	●	●
P74	Exhaust treatment	Copper-/silicon-/halogen-based materials (fluorine, chlorine, bromine) are prohibited	○	○	○	○	○	○	○	○

is not available.

			Ⓐ Model No.							
			Manifold				Discrete valve block with solenoid valve/Discrete solenoid valve			
			Dual 3-port valve integrated		5-port valve					
			MN3GA1	MN3GA2	MN4GA1	MN4GA2	(N) 3GA1	(N) 3GA2	(N) 4GA1	(N) 4GA2
Ⓓ Reduced wiring (lamp and surge suppressor provided as standard) 12 VDC/24 VDC										
T10	Common terminal block (M3 thread)	Left side specifications	●	●	●	●				
T10R		Right side specifications	●	●	●	●				
T11	Common terminal block (clamping)	Left side specifications	●	●	●	●				
T11R		Right side specifications	●	●	●	●				
T30	D sub-connector	Left side specifications	●	●	●	●				
T30R		Right side specifications	●	●	●	●				
T50	20 pin flat cable connector (with power supply terminal)	Left side specifications	●	●	●	●				
T50R		Right side specifications	●	●	●	●				
T51	20 pin flat cable connector (without power supply terminal)	Left side specifications	●	●	●	●				
T51R		Right side specifications	●	●	●	●				
T52	10 pin flat cable connector (without power supply terminal)	Left side specifications	●	●	●	●				
T52R		Right side specifications	●	●	●	●				
T53	26 pin flat cable connector (without power supply terminal)	Left side specifications	●	●	●	●				
T53R		Right side specifications	●	●	●	●				
Ⓓ Serial transmission (lamp and surge suppressor provided as standard) 24 VDC										
T6G1	CC-Link	NPN 16 points	●	●	●	●				
T7D1	DeviceNet	NPN 16 points	●	●	●	●				
T7G1	CC-Link	NPN 16 points	●	●	●	●				
T7L1	SAVE NET	NPN 16 points	●	●	●	●				
T7S1	CompoNet	NPN 16 points	●	●	●	●				
T7SP1		PNP 16 points	●	●	●	●				
T8G1	CC-Link	NPN 16 points	●	●	●	●				
T8G2		NPN 32 points	●	●	●	●				
T8GP1		PNP 16 points	●	●	●	●				
T8GP2		PNP 32 points	●	●	●	●				
T8P1	PROFIBUS-DP	NPN 16 points	●	●	●	●				
T8P2		NPN 32 points	●	●	●	●				
T8PP1		PNP 16 points	●	●	●	●				
T8PP2		PNP 32 points	●	●	●	●				
T8EC1	EtherCAT	NPN 16 points	●	●	●	●				
T8EC2		NPN 32 points	●	●	●	●				
T8ECP1		PNP 16 points	●	●	●	●				
T8ECP2		PNP 32 points	●	●	●	●				
T8EN1	EtherNet/IP	NPN 16 points	●	●	●	●				
T8EN2		NPN 32 points	●	●	●	●				
T8ENP1		PNP 16 points	●	●	●	●				
T8ENP2		PNP 32 points	●	●	●	●				
T8D1	DeviceNet	NPN 16 points	●	●	●	●				
T8D2		NPN 32 points	●	●	●	●				
T8DP1		PNP 16 points	●	●	●	●				
T8DP2		PNP 32 points	●	●	●	●				
T8EB1	CC-Link IEF Basic	NPN 16 points	●	●	●	●				
T8EB2		NPN 32 points	●	●	●	●				
T8EBP1		PNP 16 points	●	●	●	●				
T8EBP2		PNP 32 points	●	●	●	●				
T8EF1	CC-Link IE Field	NPN 16 points	●	●	●	●				
T8EF2		NPN 32 points	●	●	●	●				
T8EFP1		PNP 16 points	●	●	●	●				
T8EFP2		PNP 32 points	●	●	●	●				
T8EP1	PROFINET	NPN 16 points	●	●	●	●				
T8EP2		NPN 32 points	●	●	●	●				
T8EPP1		PNP 16 points	●	●	●	●				
T8EPP2		PNP 32 points	●	●	●	●				
T8KC1	IO-Link	NPN 16 points	●	●	●	●				
T8KC2		NPN 32 points	●	●	●	●				
T8KCP1		PNP 16 points	●	●	●	●				
T8KCP2		PNP 32 points	●	●	●	●				
A2N	Without lead wire (without socket)	With surge suppressor/lamp					●	●	●	●

Ozone proof specifications

Cutting oil prohibited specifications

Can be selected with "How to order" item Ⓕ option "A" on page 648.

Manifold components explanation and parts list

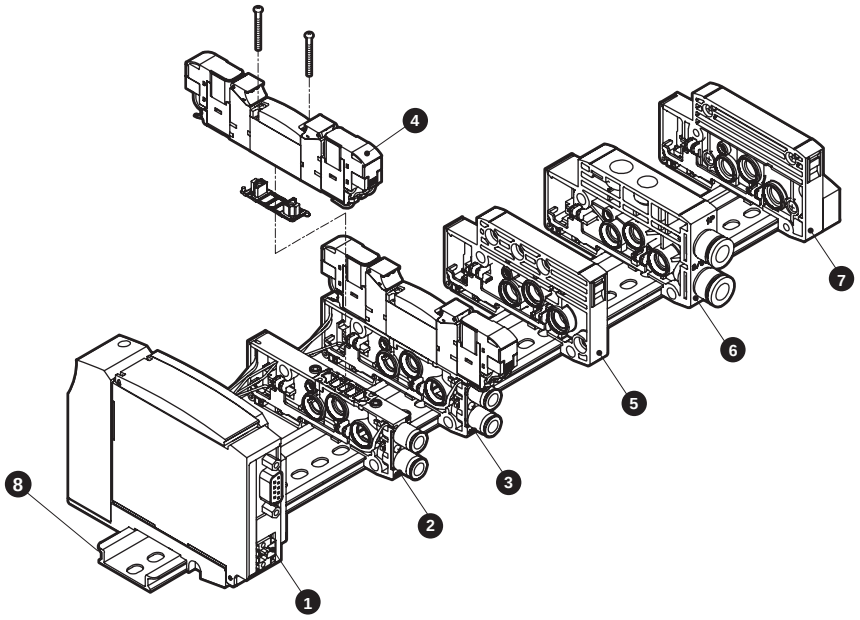

List of main components (refer to pages 682 to 698 for details)

No.	Component name	Model No. (example)	No.	Component name	Model No. (example)
1	Wiring block (Note)	N4G1R-T30-P70	5	Partition block	N4G1R-S-P70/P74
2	Discrete valve block	N4GA1R-V2-P70/P74	6	Supply and exhaust block	N4G1R-Q-8-P70/P74
3	Discrete valve block with solenoid valve	N4GA120R-C6-A2NH-3-P70/P74	7	End block R	N4G1R-ER-P70/P74
4	Solenoid valve body	4GA129R-C6-A2NH-3-P70/P74	8	DIN rail	N4GR-BAA (Length)-P70

Note: Wiring block cannot be ordered as a single item.

A type reduced wiring weight

4GA1 (g)

Part name	Model No.	Weight	Part name	Model No.	Weight	Part name	Model No.	Weight
Valve block with solenoid valve	N3GA110R-C6-A2N-3	72	Supply and exhaust block	N4G1R-Q-8	58	Wiring block (*)	N4G1R-T10(R)	207
	N3GA1110R-C6-A2N-3	72		N4G1R-QK-8	60		N4G1R-T30(R)	165
	N4GA110R-C6-A2N-3	72	End block	N4G1R-E*	60		N4G1R-T50(R)	167
	N4GA120R-C6-A2N-3	91		N4G1R-EX*	60		N4G1R-T6G1	295
	N4GA1$\frac{3}{5}$0R-C6-A2N-3	95	Partition block	N4G1R-S	45		N4G1R-T7*	203
	N3GA1660R-C6-A2N-3	91	Valve block	N4GA1R-V1	28		N4G1R-T8*	229
Valve block with masking plate	N4GA1R-MP*-C6	34		N4GA1R-V2	30	DIN rail	N4GR-BAA (Length)	0.19/mm

Note: Wiring block cannot be ordered as a single item.

4GA2 (g)

Part name	Model No.	Weight	Part name	Model No.	Weight	Part name	Model No.	Weight
Valve block with solenoid valve	N3GA210R-C8-A2N-3	131	Supply and exhaust block	N4G2R-Q-10	83	Wiring block (*)	N4G2R-T10(R)	223
	N3GA2110R-C8-A2N-3	131		N4G2R-QK-10	85		N4G2R-T30(R)	182
	N4GA210R-C8-A2N-3	131	End block	N4G2R-E*	84		N4G2R-T50(R)	184
	N4GA220R-C8-A2N-3	151		N4G2R-EX*	85		N4G2R-T6G1	312
	N4GA2$\frac{3}{5}$0R-C8-A2N-3	163	Partition block	N4G2R-S	60		N4G2R-T7*	204
	N3GA2660R-C8-A2N-3	151	Valve block	N4GA2R-V1	53		N4G2R-T8*	242
Valve block with masking plate	N4GA2R-MP*-C8	66		N4GA2R-V2	55	DIN rail	N4GR-BAA (Length)	0.19/mm

Note: Wiring block cannot be ordered as a single item.

Parts list

Applicable	Part name	Model No.	Applicable	Part name	Model No.
Valve 4G1	Cartridge fitting ø1.8 barbed	4G1R-JOINT-CF-P70	Common	Coil assembly	4GR-A2N-[*2]-COIL-[*3]-P70 *2: Ozone/coolant proof (blank, A) Surgeless (S) Low exoergic/energy circuit (E) *3: Voltage (3, 4)
	Cartridge fitting ø1.8 straight	4G1R-JOINT-C18-P70			
	Cartridge fitting ø4 straight	4G1R-JOINT-C4-P70			
	Cartridge fitting ø6 straight	4G1R-JOINT-C6-P70			
	Cartridge fitting ø1/8 inch straight	4G1R-JOINT-C3N-P70	Manifold	Expansion socket assembly (Details on page 737)	For a side solenoid N4GR-SOCKET-ASSY-[selection No.]-P70
	Cartridge fitting ø5/32 inch straight	4G1R-JOINT-C4N-P70			
	Plug cartridge	4G1R-JOINT-CPG-P70			
Valve 4G2	Cartridge fitting ø4 straight	4G2R-JOINT-C4-P70			For b side solenoid N4GR-RELAY-SOCKET-[selection No.]-P70
	Cartridge fitting ø6 straight	4G2R-JOINT-C6-P70			
	Cartridge fitting ø8 straight	4G2R-JOINT-C8-P70			
	Cartridge fitting ø1/4 inch straight	4G2R-JOINT-C6N-P70			
	Cartridge fitting ø5/16 inch straight	4G2R-JOINT-C8N-P70			
	Plug cartridge	4G2R-JOINT-CPG-P70			

MEMO

SCPD3
SCM
SSD2
MDC2
SMG
LCM
LCR
LCG
LCX
STM
STG
STR2
MRL2
GRC
Cylinder switch
MN3E MN4E
4GA/B
M4GA/B
MN4GA/B
F.R (module unit)
Clean F.R
Precision R
Press gauge Diff. press gauge
Electro-pneumatic R
Speed controller
Auxiliary valve
Fitting/ tube
Clean air unit
Pressure sensor
Flow rate sensor
Valve for air blow
Ending

Dimensions CAD

MN4GA1-P7*

● Common terminal block (M3 thread) left side (T10)

*1: Clamping specification (T11) is also available. Dimensions are the same as T10.
*2: For the 2-position single 3-port valve, either A port or B port is a plug. In addition, the two 3-port valve integrated have the same dimensions as the double model.

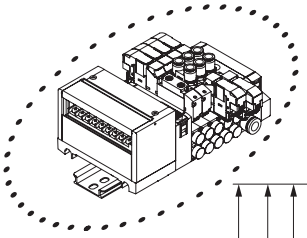

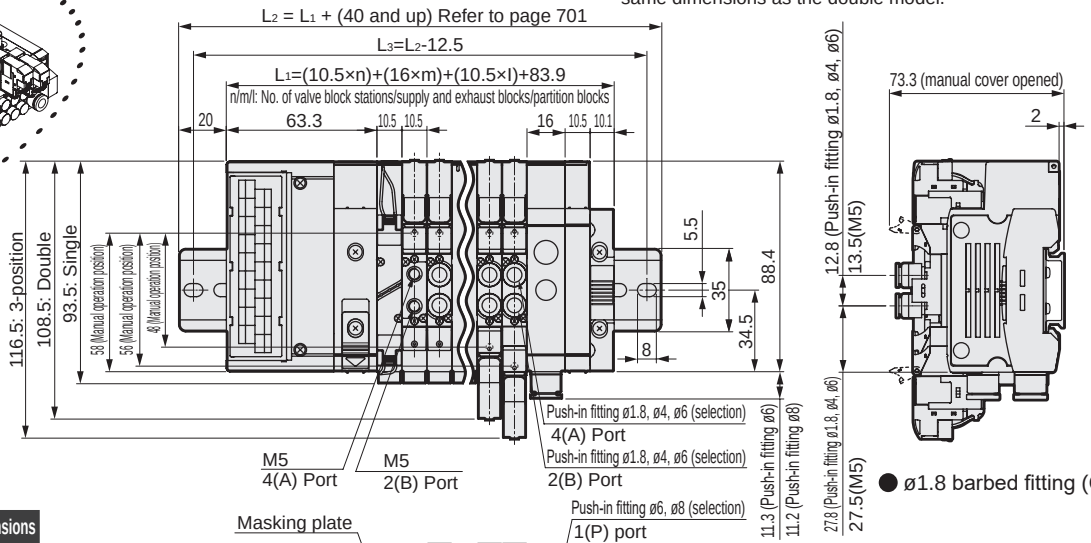

● ø1.8 barbed fitting (CF)

Push-in fitting bore size	* Dimensions
ø1.8	65.1
ø4	69.1
ø6	70.3
ø1/8"	69.6
ø5/32"	69.1

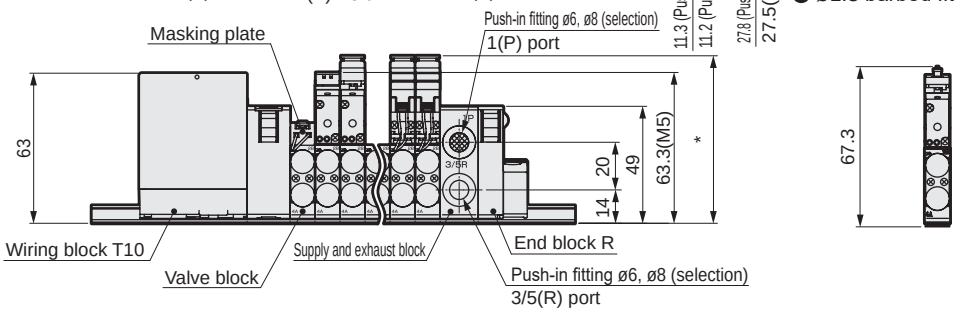

● Common terminal block (M3 thread) right side (T10R)

*1: Clamping specification (T11R) is also available. Dimensions are the same as T10R.
*2: For the 2-position single 3-port valve, either A port or B port is a plug. In addition, the two 3-port valve integrated have the same dimensions as the double model.

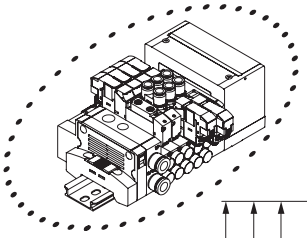

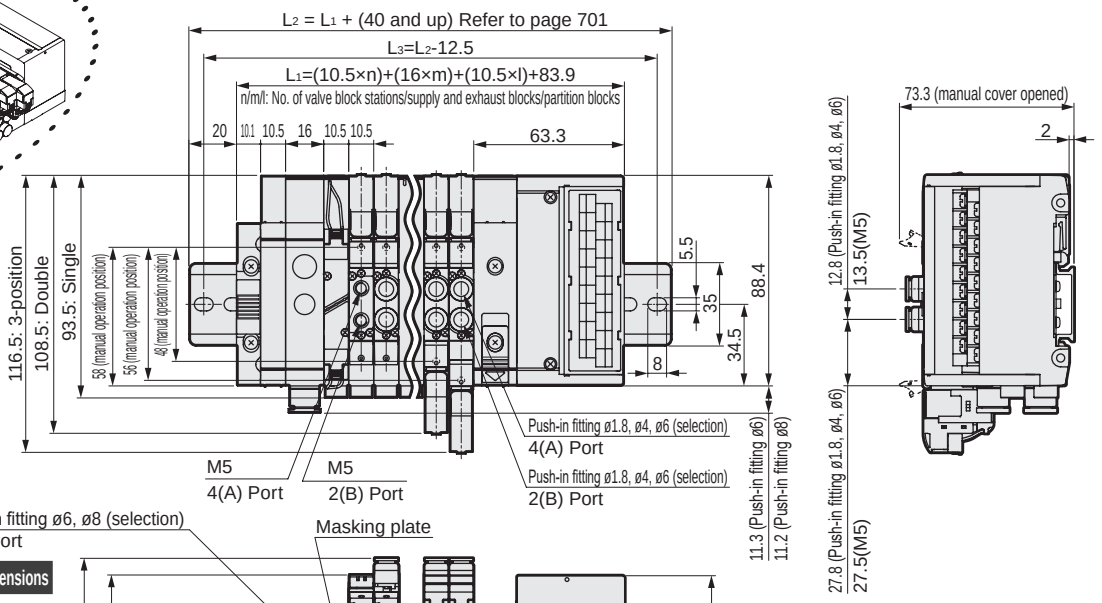

Push-in fitting bore size	* Dimensions
ø1.8	65.1
ø4	69.1
ø6	70.3
ø1/8"	69.6
ø5/32"	69.1

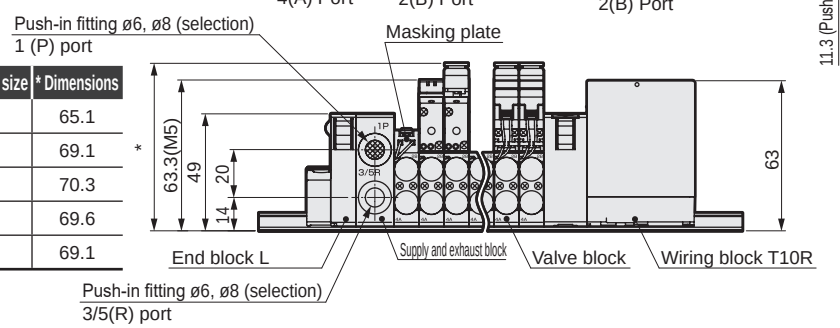

Dimensions CAD

MN4GA2-P7*

● Common terminal block (M3 thread) left side (T10)

*1: Clamping specification (T11) is also available. Dimensions are the same as T10.
*2: For the 2-position single 3-port valve, either A port or B port is a plug. In addition, the two 3-port valve integrated have the same dimensions as the double model.

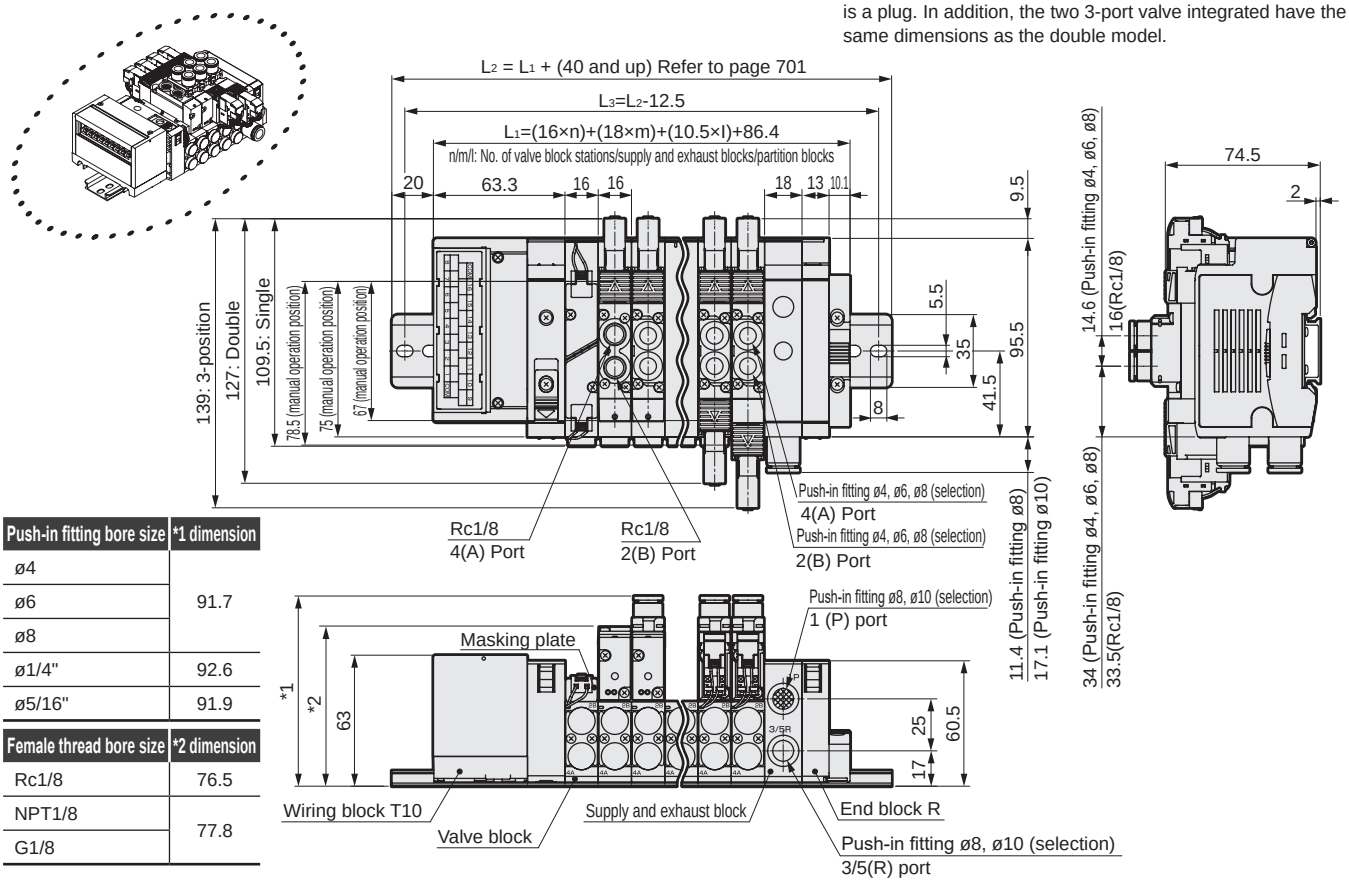

Push-in fitting bore size	*1 dimension
ø4	91.7
ø6	
ø8	
ø1/4"	92.6
ø5/16"	91.9

Female thread bore size	*2 dimension
Rc1/8	76.5
NPT1/8	77.8
G1/8	

● Common terminal block (M3 thread) right side (T10R)

*1: Clamping specification (T11R) is also available. Dimensions are the same as T10R.
*2: For the 2-position single 3-port valve, either A port or B port is a plug. In addition, the two 3-port valve integrated have the same dimensions as the double model.

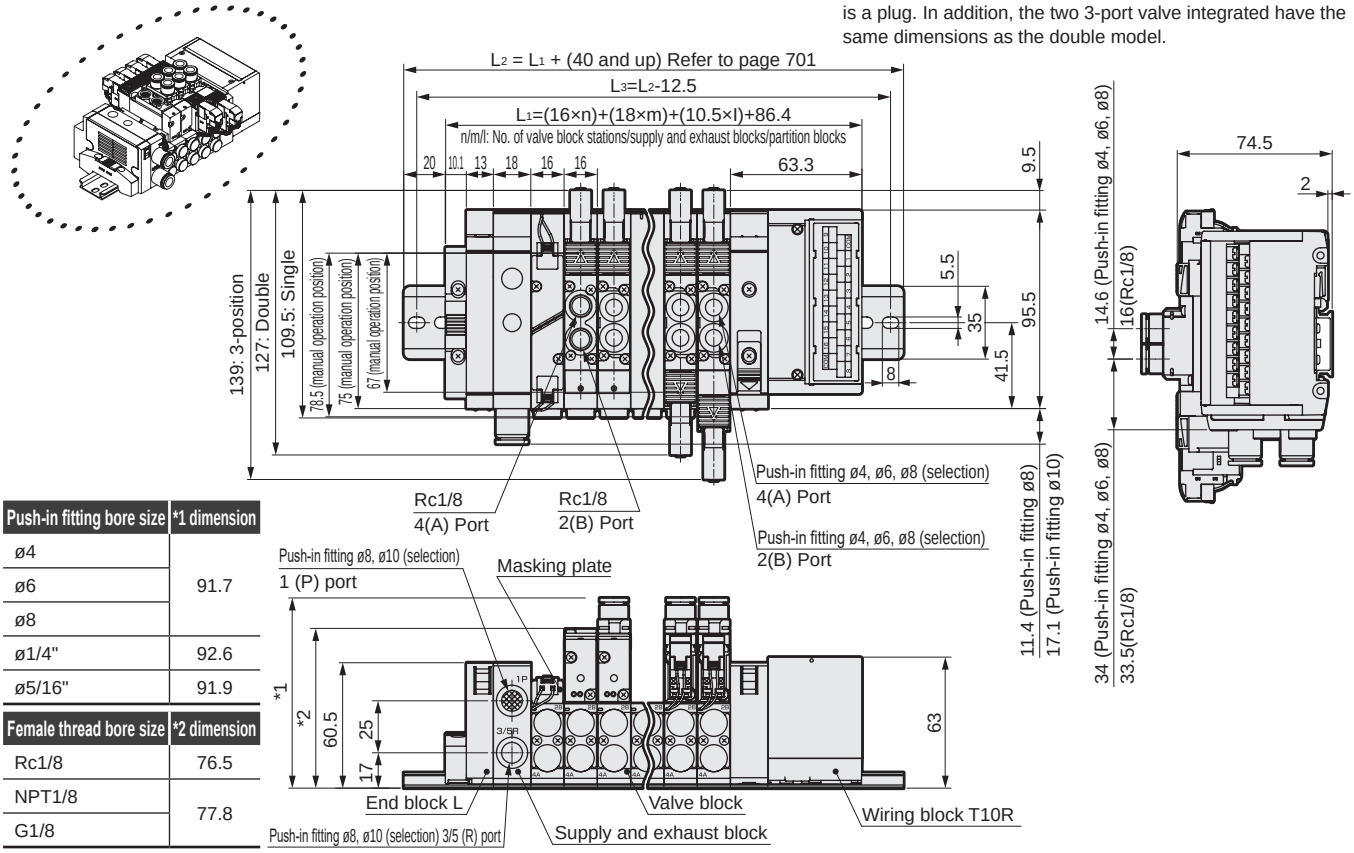

Push-in fitting bore size	*1 dimension
ø4	91.7
ø6	
ø8	
ø1/4"	92.6
ø5/16"	91.9

Female thread bore size	*2 dimension
Rc1/8	76.5
NPT1/8	77.8
G1/8	

MN4GA1/2-T30 Series

Reduced wiring block manifold; body piping

Dimensions CAD

MN4GA1-P7*

● D sub-connector left side (T30)

Note: For the 2-position single 3-port valve, either A port or B port is a plug. In addition, the two 3-port valve integrated have the same dimensions as the double model.

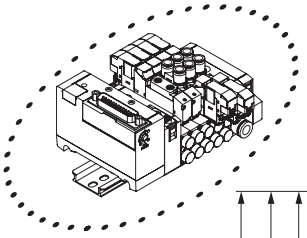

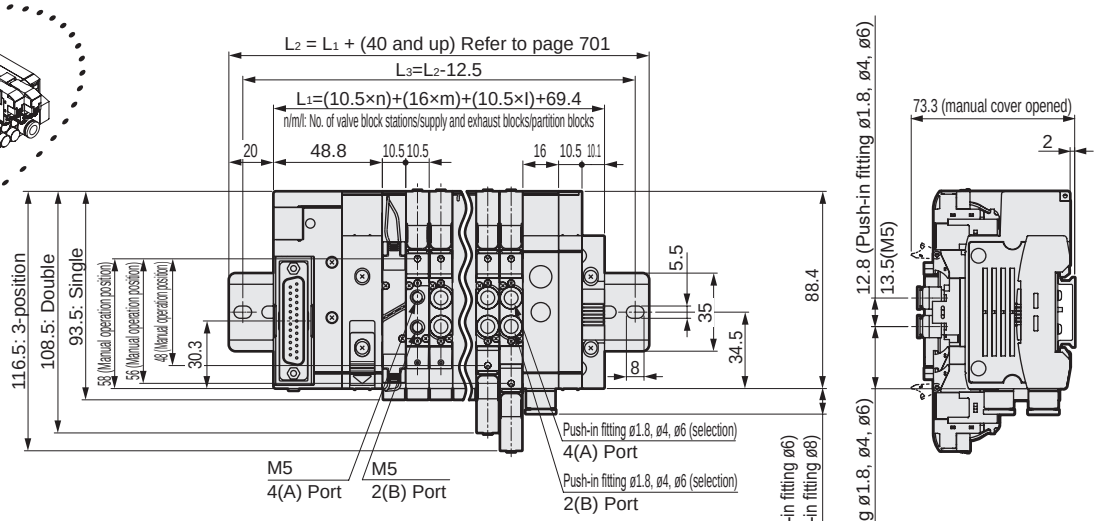

Push-in fitting bore size	* Dimensions
ø1.8	65.1
ø4	69.1
ø6	70.3
ø1/8"	69.6
ø5/32"	69.1

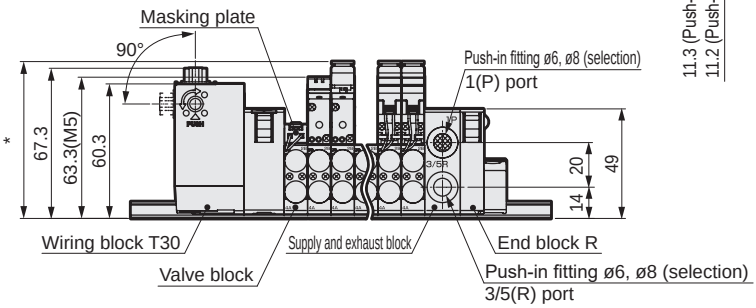

● ø1.8 barbed fitting (CF)

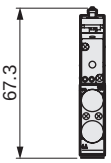

● D sub-connector right side (T30R)

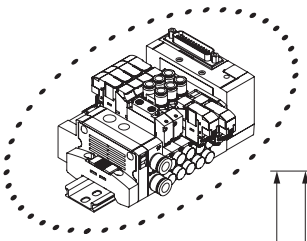

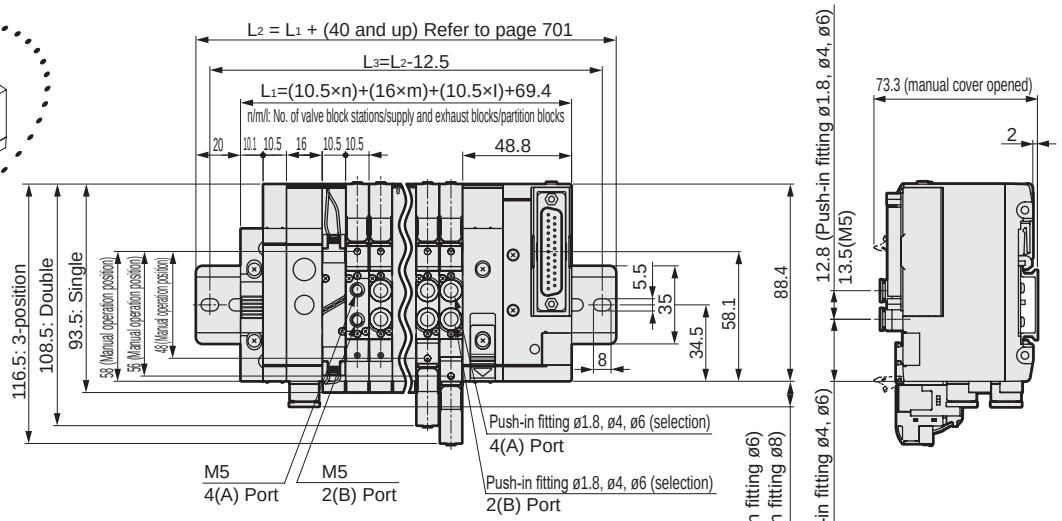

Push-in fitting bore size	* Dimensions
ø1.8	65.1
ø4	69.1
ø6	70.3
ø1/8"	69.6
ø5/32"	69.1

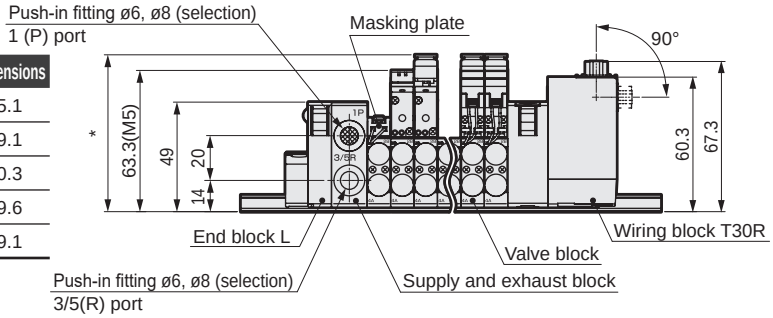

Dimensions

MN4GA2-P7*

● D sub-connector left side (T30)

Note: For the 2-position single 3-port valve, either A port or B port is a plug. In addition, the two 3-port valve integrated have the same dimensions as the double model.

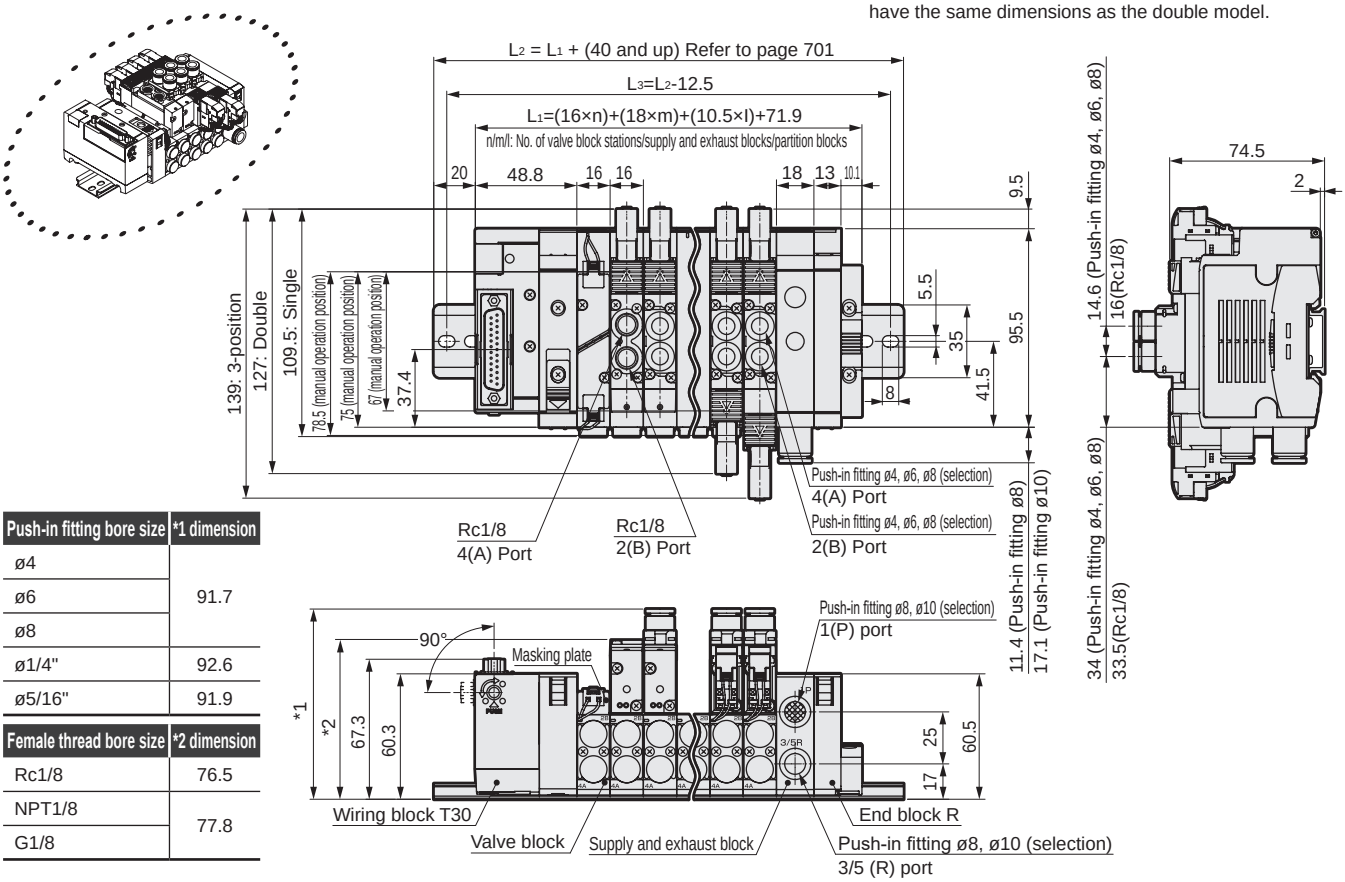

Push-in fitting bore size	*1 dimension
ø4	91.7
ø6	
ø8	
ø1/4"	92.6
ø5/16"	91.9

Female thread bore size	*2 dimension
Rc1/8	76.5
NPT1/8	77.8
G1/8	

● D sub-connector right side (T30R)

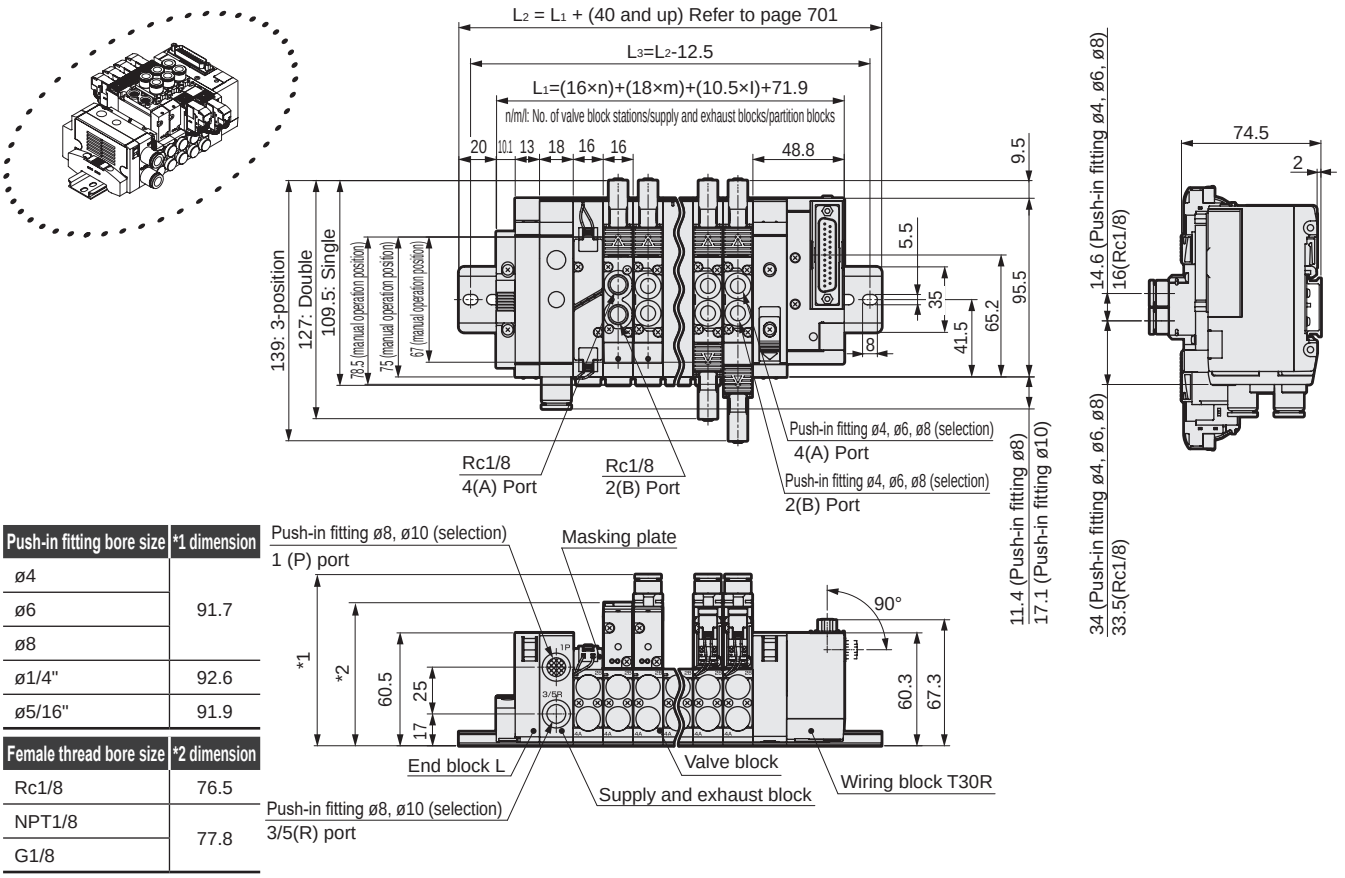

Push-in fitting bore size	*1 dimension
ø4	91.7
ø6	
ø8	
ø1/4"	92.6
ø5/16"	91.9

Female thread bore size	*2 dimension
Rc1/8	76.5
NPT1/8	77.8
G1/8	

SCPD3
SCM
SSD2
MDC2
SMG
LCM
LCR
LCG
LCX
STM
STG
STR2
MRL2
GRC
Cylinder switch
MN3E MN4E
4GA/B
M4GA/B
MN4GA/B
F.R (module unit)
Clean F.R
Precision R
Press gauge Diff. press gauge
Electro-pneumatic R
Speed controller
Auxiliary valve
Fitting/ tube
Clean air unit
Pressure sensor
Flow rate sensor
Valve for air blow
Ending

Dimensions CAD

MN4GA1-P7*

*1: T51, T52, and T53 are also available as flat cable connector. Dimensions are the same as T50.
*2: For the 2-position single 3-port valve, either A port or B port is a plug. In addition, the two 3-port valve integrated have the same dimensions as the double model.

● Flat cable connector left side (T50) with power supply terminal

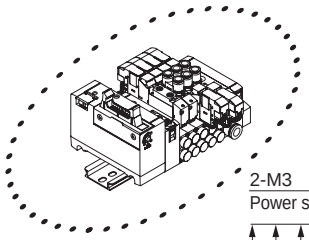

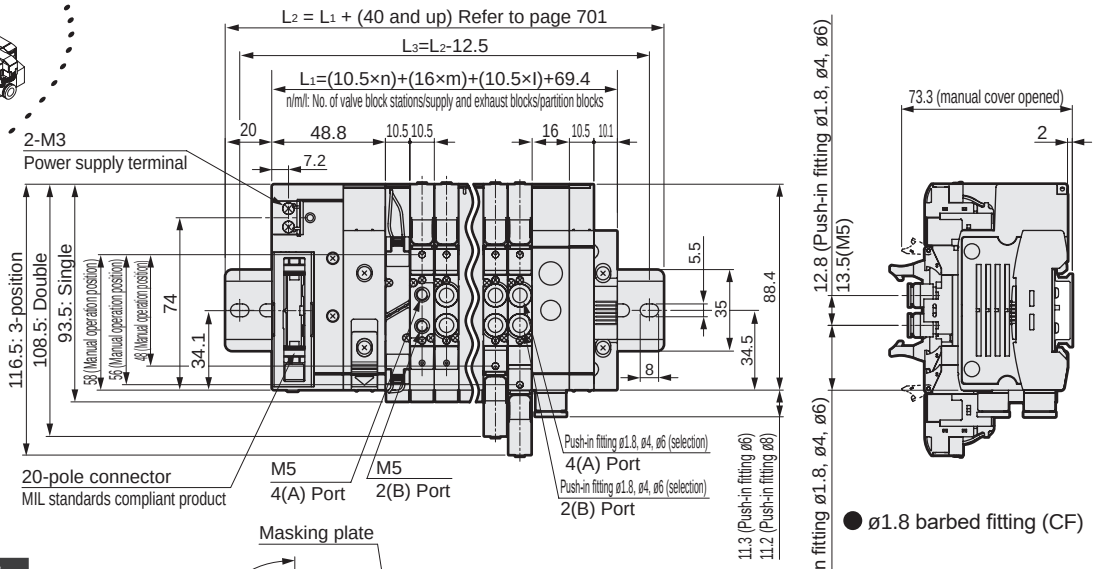

● ø1.8 barbed fitting (CF)

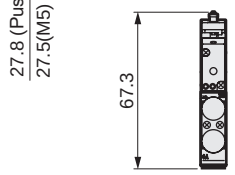

Push-in fitting bore size	* Dimensions
ø1.8	65.1
ø4	69.1
ø6	70.3
ø1/8"	69.6
ø5/32"	69.1

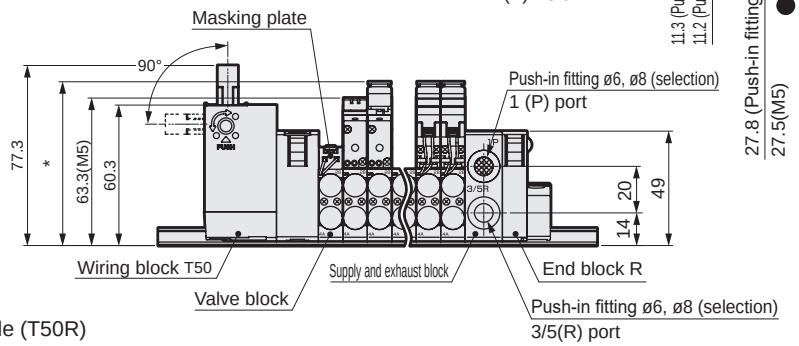

● Flat cable connector right side (T50R) with power supply terminal

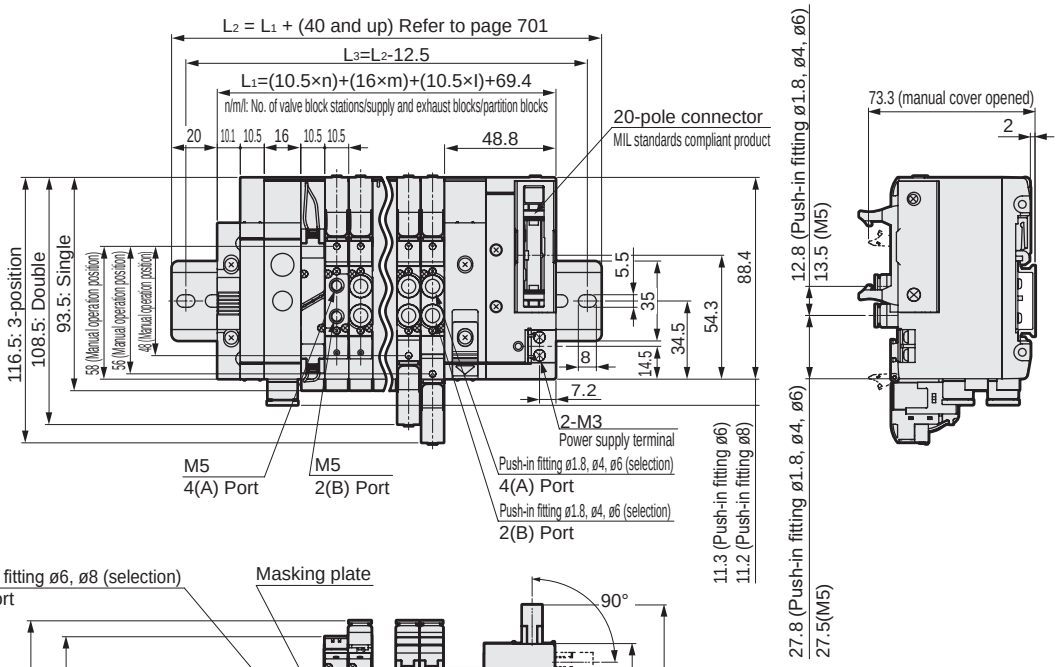

Push-in fitting bore size	* Dimensions
ø1.8	65.1
ø4	69.1
ø6	70.3
ø1/8"	69.6
ø5/32"	69.1

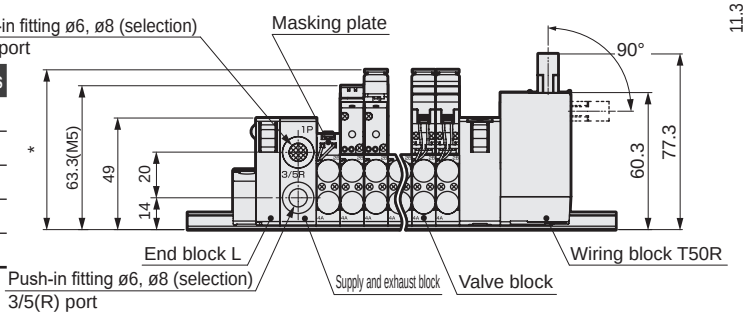

Dimensions

MN4GA2-P7*

*1: T51, T52, and T53 are also available as flat cable connector. Dimensions are the same as T50.
*2: For the 2-position single 3-port valve, either A port or B port is a plug. In addition, the two 3-port valve integrated have the same dimensions as the double model.

● Flat cable connector left side (T50) with power supply terminal

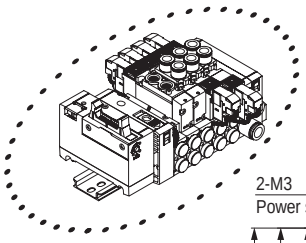

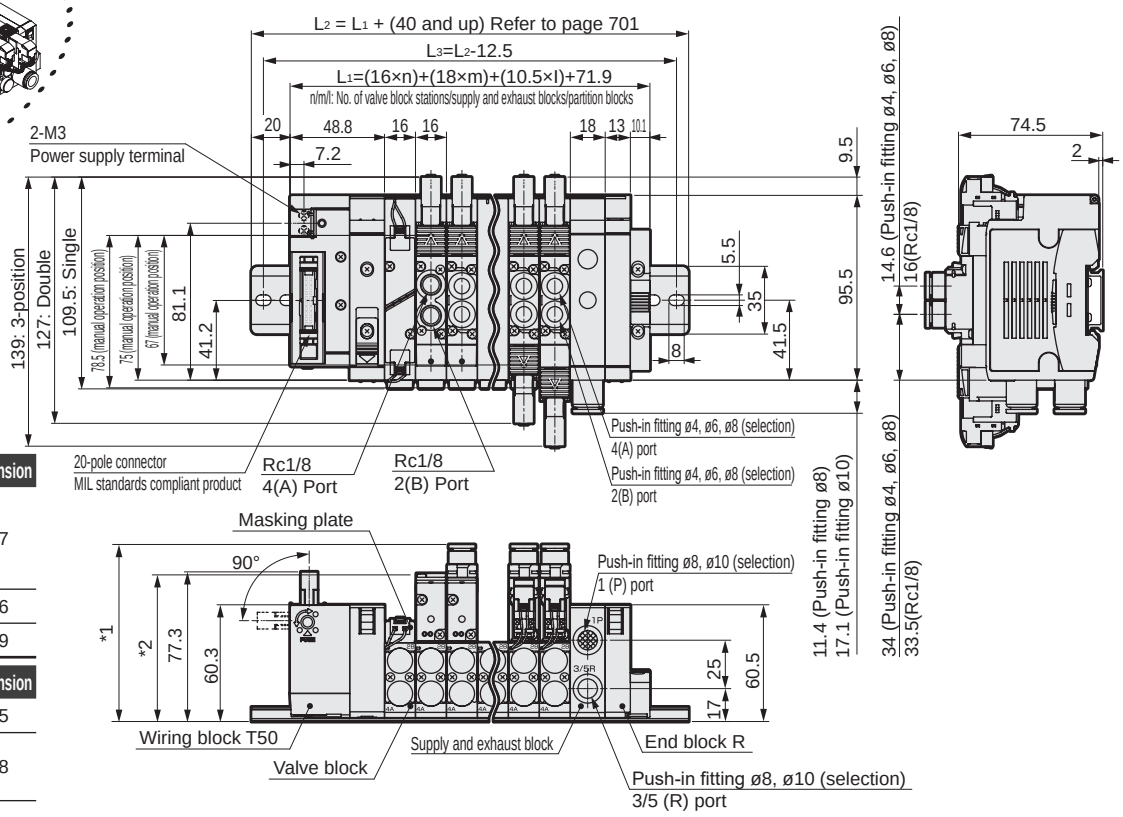

Push-in fitting bore size	*1 dimension
ø4	91.7
ø6	
ø8	
ø1/4”	92.6
ø5/16”	91.9

Female thread bore size	*2 dimension
Rc1/8	76.5
NPT1/8	77.8
G1/8	

● Flat cable connector right side (T50R) with power supply terminal

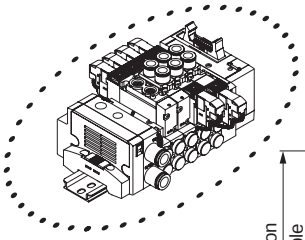

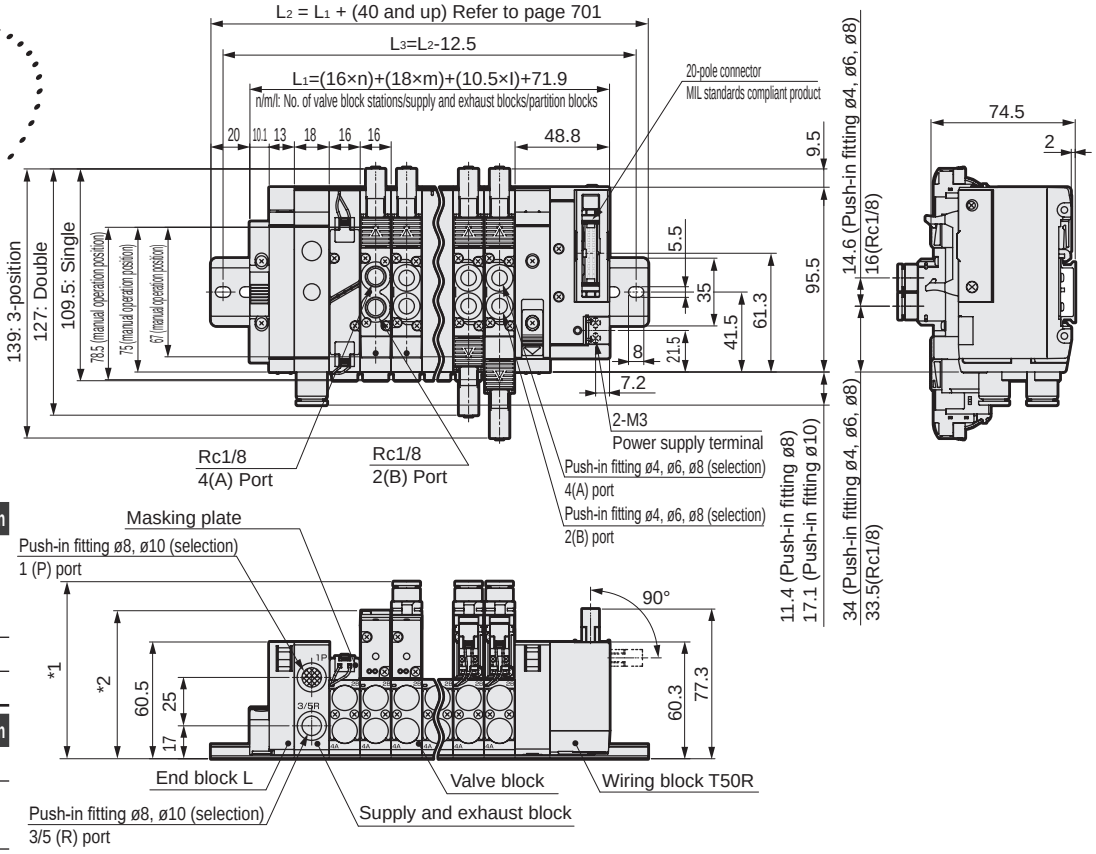

Push-in fitting bore size	*1 dimension
ø4	91.7
ø6	
ø8	
ø1/4”	92.6
ø5/16”	91.9

Female thread bore size	*2 dimension
Rc1/8	76.5
NPT1/8	77.8
G1/8	

SCPD3
SCM
SSD2
MDC2
SMG
LCM
LCR
LCG
LCX
STM
STG
STR2
MRL2
GRC
Cylinder switch
MN3E MN4E
4GA/B
M4GA/B
MN4GA/B
F.R (module unit)
Clean F.R
Precision R
Press gauge Diff. press gauge
Electro-pneumatic R
Speed controller
Auxiliary valve
Fitting/ tube
Clean air unit
Pressure sensor
Flow rate sensor
Valve for air blow
Ending

Dimensions CAD

MN4GA1-P7*

● Serial transmission (T6G1)

Note: For the 2-position single 3-port valve, either A port or B port is a plug. In addition, the two 3-port valve integrated have the same dimensions as the double model.

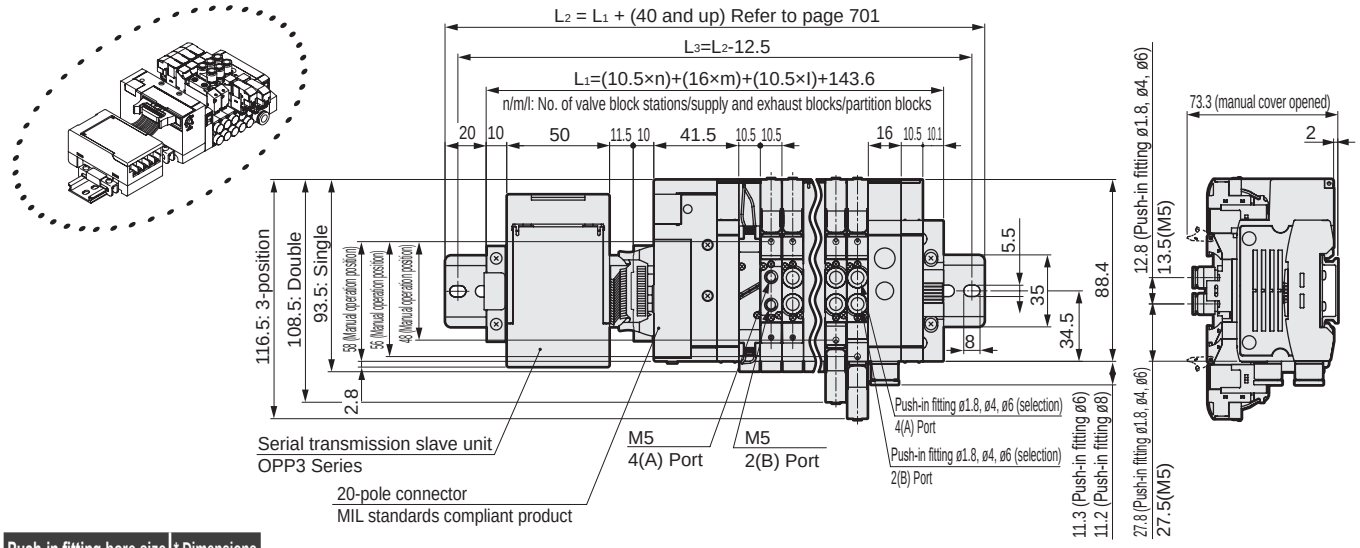

Push-in fitting bore size	* Dimensions
ø1.8	65.1
ø4	69.1
ø6	70.3
ø1/8”	69.6
ø5/32”	69.1

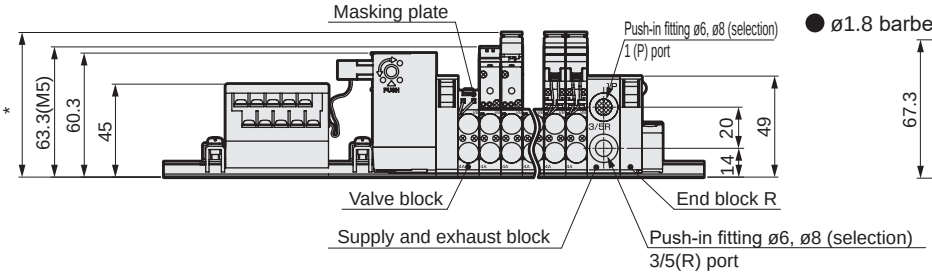

● ø1.8 barbed fitting (CF)

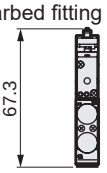

MN4GA2-P7*

● Serial transmission (T6G1)

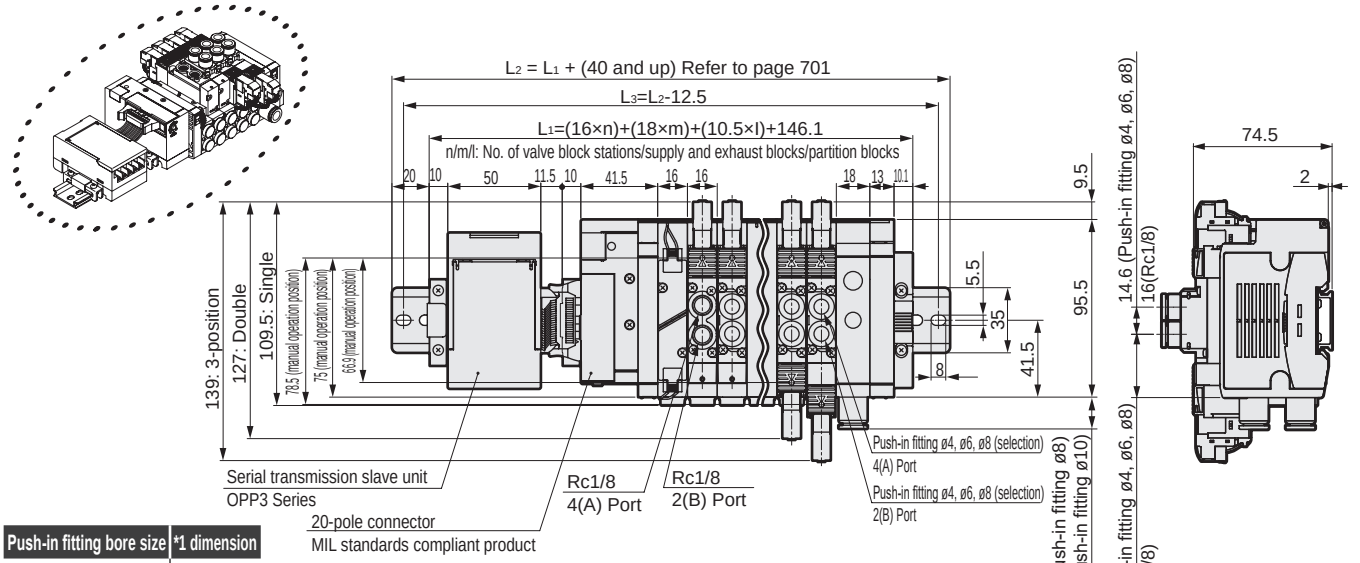

Push-in fitting bore size	*1 dimension
ø4	91.7
ø6	
ø8	
ø1/4”	92.6
ø5/16”	91.9

Female thread bore size	*2 dimension
Rc1/8	76.5
NPT1/8	77.8
G1/8	

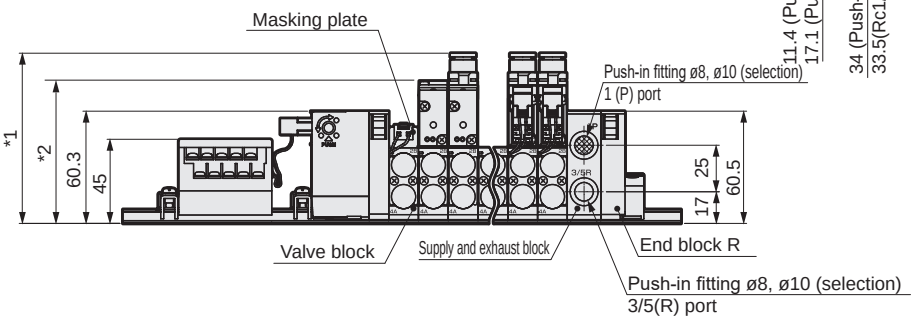

Dimensions

MN4GA1-P7*

● Thin serial transmission (T7□)

Note: For the 2-position single 3-port valve, either A port or B port is a plug. In addition, the two 3-port valve integrated have the same dimensions as the double model.

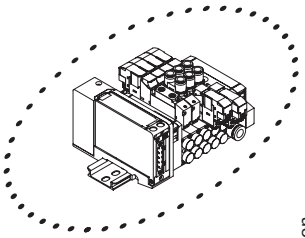

Push-in fitting bore size	* Dimensions
ø1.8	65.1
ø4	69.1
ø6	70.3
ø1/8”	69.6
ø5/32”	69.1

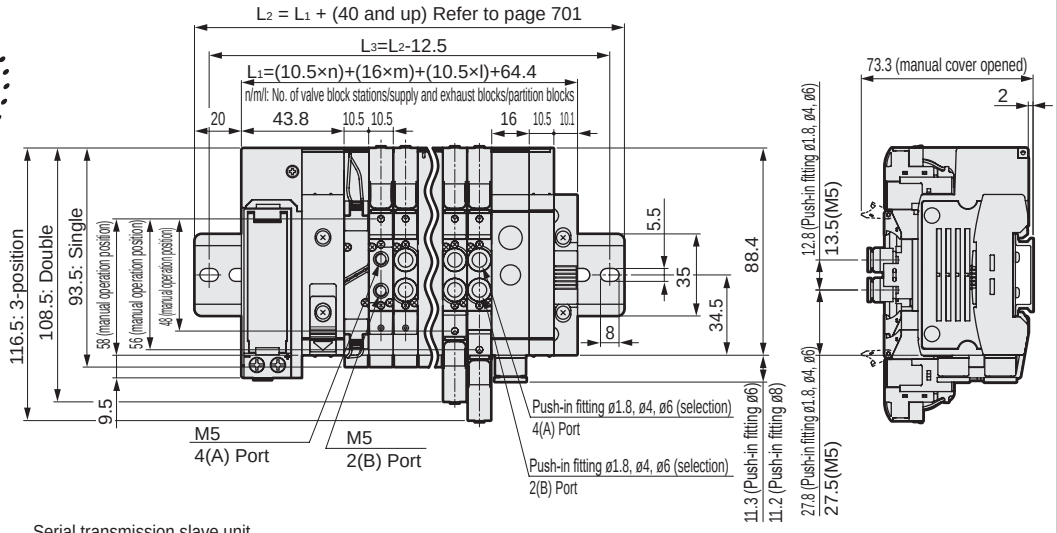

For T7S□1

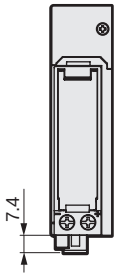

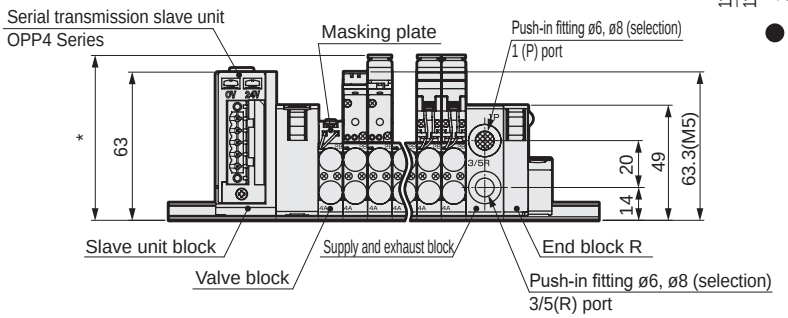

● ø1.8 barbed fitting (CF)

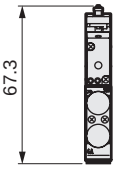

MN4GA2-P7*

● Thin serial transmission (T7□)

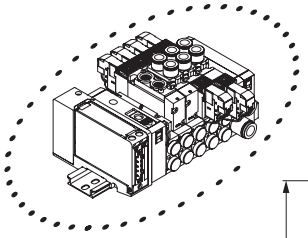

Push-in fitting bore size	*1 dimension
ø4	91.7
ø6	
ø8	
ø1/4”	92.6
ø5/16”	91.9

Female thread bore size	*2 dimension
Rc1/8	76.5
NPT1/8	77.8
G1/8	

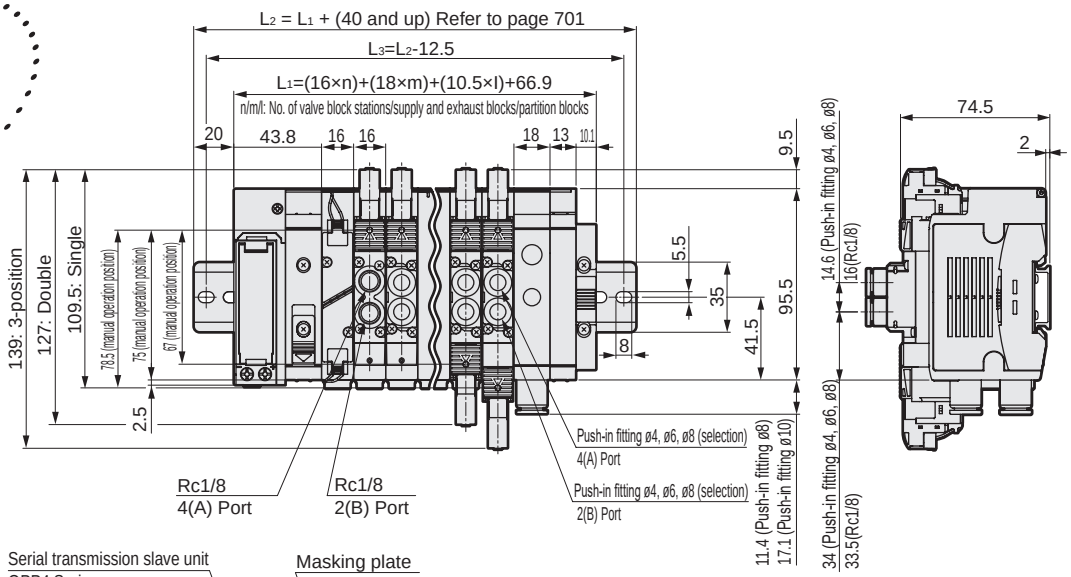

For T7S□1

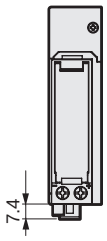

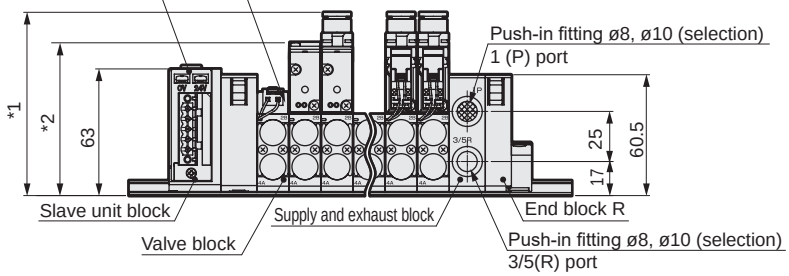

MN4GA1/2-T8* Series

Reduced wiring block manifold: body piping

Dimensions

MN4GA1-P7*

● Thin serial transmission (T8□)

Note: For the 2-position single 3-port valve, either A port or B port is a plug. In addition, the two 3-port valve integrated have the same dimensions as the double model.

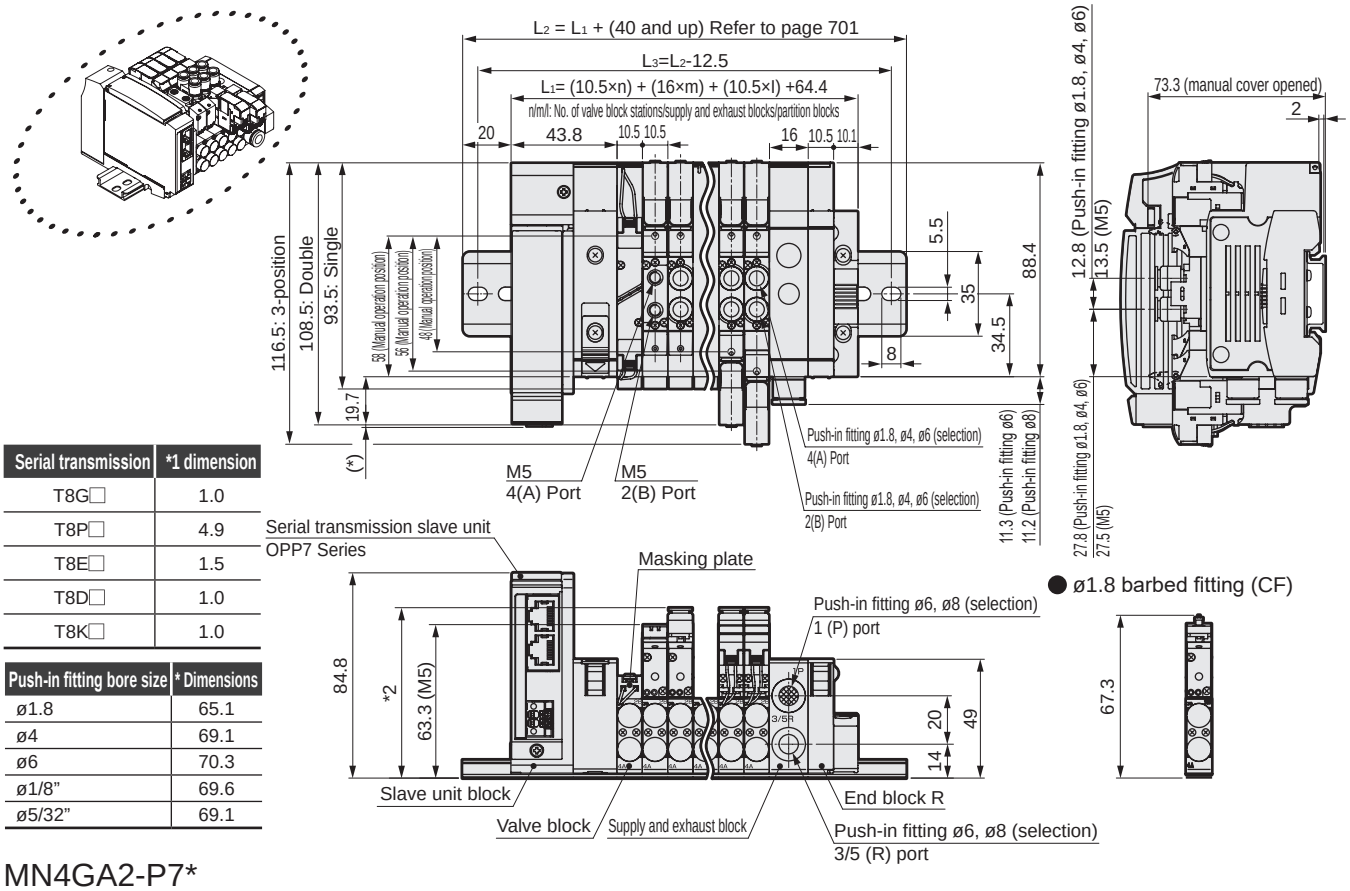

Serial transmission	*1 dimension
T8G□	1.0
T8P□	4.9
T8E□	1.5
T8D□	1.0
T8K□	1.0

Push-in fitting bore size	* Dimensions
ø1.8	65.1
ø4	69.1
ø6	70.3
ø1/8”	69.6
ø5/32”	69.1

MN4GA2-P7*

● Thin serial transmission (T8□)

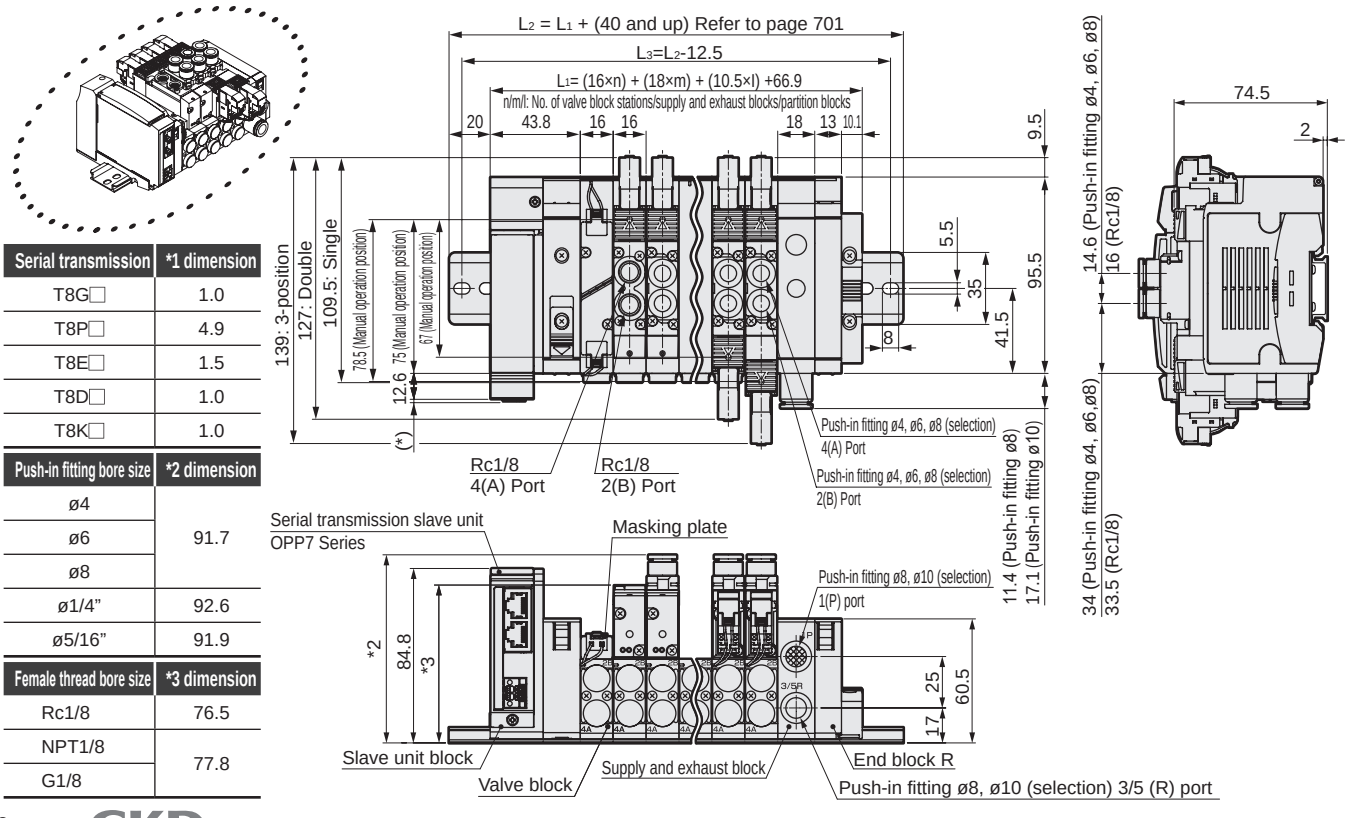

Serial transmission	*1 dimension
T8G□	1.0
T8P□	4.9
T8E□	1.5
T8D□	1.0
T8K□	1.0

Push-in fitting bore size	*2 dimension
ø4	91.7
ø6	
ø8	
ø1/4”	92.6
ø5/16”	91.9

Female thread bore size	*3 dimension
Rc1/8	76.5
NPT1/8	77.8
G1/8	

Dimensions

MN4G1 Supply and exhaust block

● Fitting straight
● ø6(6) ● ø6.4(6N) ● ø8(8)

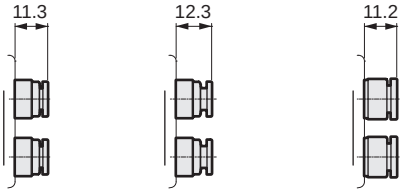

● Fitting straight, single plug
● ø6(6X) ● ø6.4(6NX) ● ø8(8X)

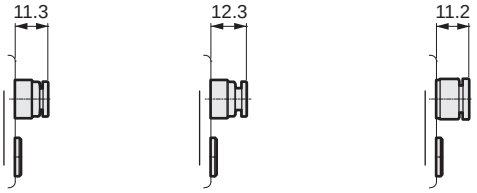

● L Fitting (upward)
● ø6(6L) ● ø6.4(6LN) ● ø8(8L)

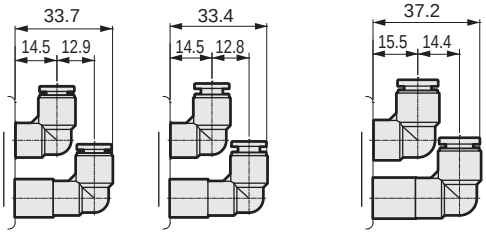

● L Fitting (downward)
● ø6(6D) ● ø6.4(6DN) ● ø8(8D)

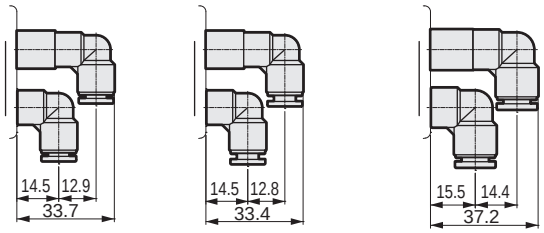

● L Fitting (upward), single plug
● ø6(6LX) ● ø6.4(6LXN) ● ø8(8LX)

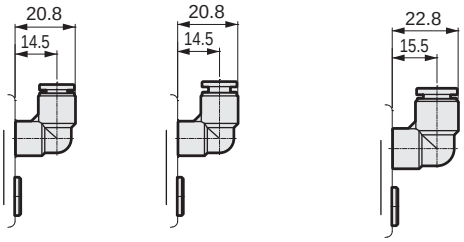

● L Fitting (downward), single plug
● ø6(6DX) ● ø6.4(6DXN) ● ø8(8DX)

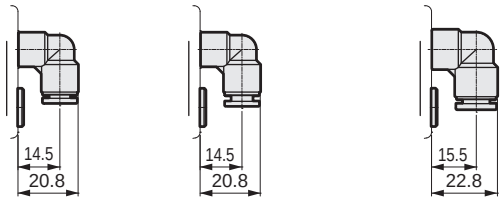

MN4G2 Supply and exhaust block

● Fitting straight
● ø8(8) ● ø10(10)

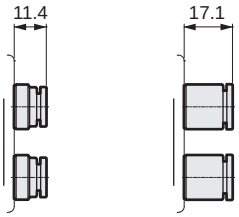

● Fitting straight, single plug
● ø8(8X) ● ø10(10X)

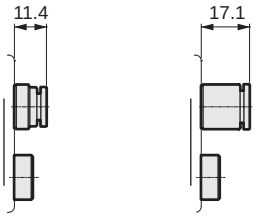

● L Fitting (upward)
● ø8(8L) ● ø10(10L)

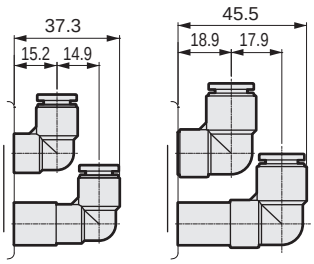

● L Fitting (downward)
● ø8(8D) ● ø10(10D)

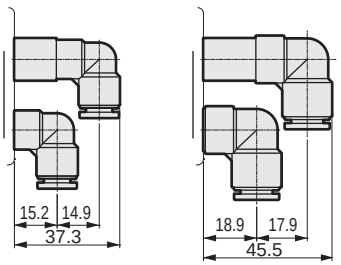

● L Fitting (upward), single plug
● ø8(8LX) ● ø10(10LX)

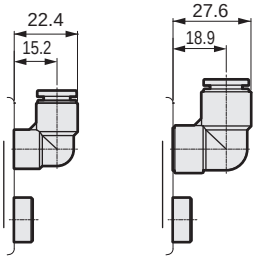

● L Fitting (downward), single plug
● ø8(8DX) ● ø10(10DX)

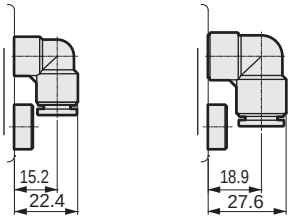

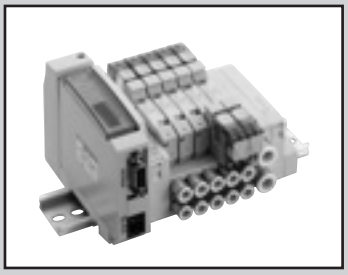

Reduced wiring block manifold
Base piping

MN4GB1/2-T* Series

● Applicable cylinder bore size: ø20 to ø80

RoHS CAD

JIS symbol

● Dual 3-port valve integrated
(A side valve: NC, B side valve: NC)

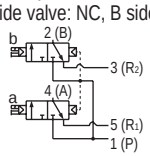

(A side valve: NC, B side valve: NO)

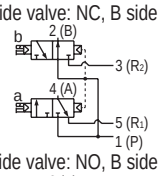

(A side valve: NO, B side valve: NC)

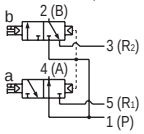

(A side valve: NO, B side valve: NO)

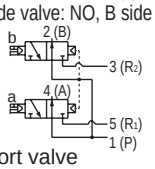

● 5-port valve
2-position single

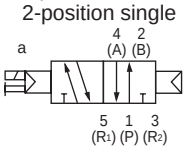

2-position double

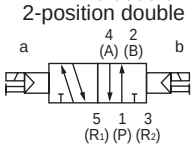

3-position
All ports closed

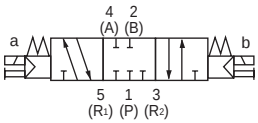

3-position A/B/R connection

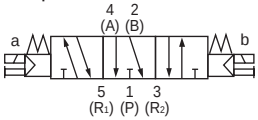

3-position P/A/B connection

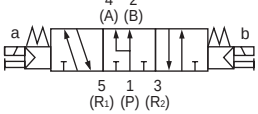

Structure and material restriction

	Structure	Material restriction			Model No.
P7 Series	Dust generation preventing				– P70
	Dust generation preventing	Copper-based materials prohibited	Silicon-based materials prohibited	Halogen-based materials prohibited (fluorine, chlorine, bromine)	– P74 Custom order product

Manifold common specifications

Item	Description
Manifold	Block manifold
Mounting method	DIN rail mount
Supply and exhaust method	Common supply/common exhaust (With internal exhaust check valve)
Pilot exhaust method	Main valve/pilot valve common exhaust (Pilot exhaust check valve built-in)
Piping direction	Valve top direction
Valve and operation	Pilot operated soft spool valve
Working fluid	Compressed air
Max. working pressure MPa	0.7
Min. working pressure MPa	0.2 (*3)
Proof pressure MPa	1.05
Ambient temp °C	-5 to 55 (no freezing)
Fluid temp °C	5 to 55
Manual override	Non-locking/locking common (standard)
Lubrication (*1)	Not required
Degree of protection (*2)	Dust-proof
Vibration resistance m/s^2	50 or less
Shock resistance m/s^2	300 or less
Atmosphere	Cannot be used in corrosive gas environments

Electrical specifications

Item		Description		
Rated voltage V		T1□, T30□, T5□		T6G1, T7□, T8□
		24 DC	12 DC	24 DC
Voltage fluctuation range (*4)		±10%		+10%, -5%
Holding current A	Standard	0.017	0.034	0.017
	With low exoergic/energy saving circuit	0.005	0.010	0.005
Power consumption W	Standard	0.4		
	With low exoergic/energy saving circuit	0.1		
Thermal class		B		
Surge suppressor (*5)		Zener diode		
Indicator		LED		

*1 Use turbine oil Class 1 ISO VG32 for lubrication. Excessive or intermittent lubrication results in unstable operation.
*2 Dust-proof degree of protection. Not drip-proof. Avoid dripping water or oil, etc., during use.
*3 The working pressure range is 0 to 0.7 MPa when the external pilot (option code: K) is selected. Set the external pilot pressure between 0.2 and 0.7 MPa.
*4 T6G1, T7□ and T8□ (serial transmission) may experience voltage drops due to internal circuitry, so care should be taken when regulating voltages.
*5 If low exoergic/energy circuit or surgeless types are selected then there will be a diode.

Individual specifications

Item			MN3GB1/MN4GB1									
			T10	T11	T30	T50	T51	T52	T53	T6G1	T7*1	T8*1/2
Max. station No.	Standard wiring		16 stations	24 stations	24 stations	16 stations	18 stations	8 stations	24 stations	16 stations	8/16 stations	16/24 stations
	Double wiring		8 stations	12 stations	12 stations	8 stations	9 stations	4 stations	12 stations	8 stations	4/8 stations	8/16 stations
Max. number of solenoids			16 points	24 points	24 points	16 points	18 points	8 points	24 points	16 points	8/16 points	16/32 points
Port size	Metric fitting/ M5, Rc thread	A/B port	Barbed fitting ø1.8 push-in fitting ø1.8, ø4, ø6									
		P/R port	Push-in fitting ø6, ø8									
	Inch fitting/M5, NPT thread	A/B port	Push-in fitting ø1/8", ø5/32"									
		P/R port	Push-in fitting ø1/4", ø5/16"									

· For weight, refer to page 666.

Item			MN3GB2/MN4GB2									
			T10	T11	T30	T50	T51	T52	T53	T6G1	T7*1	T8*1/2
Max. station No.	Standard wiring		16 stations	20 stations	20 stations	16 stations	18 stations	8 stations	20 stations	16 stations	8/16 stations	16/20 stations
	Double wiring		8 stations	12 stations	12 stations	8 stations	9 stations	4 stations	12 stations	8 stations	4/8 stations	8/16 stations
Max. number of solenoids			16 points	24 points	24 points	16 points	18 points	8 points	24 points	16 points	8/16 points	16/32 points
Port size	Metric fitting/ M5, Rc thread	A/B port	Push-in fitting ø4, ø6, ø8, Rc1/8									
		P/R port	Push-in fitting ø8, ø10									
	Inch fitting/M5, NPT thread	A/B port	Push-in fitting ø1/4", ø5/16", NPT1/8									
		P/R port	Push-in fitting ø5/16", ø3/8"									

· For weight, refer to page 666.

Flow characteristics

Model No.	Solenoid position		P→A/B		A/B→R1/R2	
			C[dm^3/(s·bar)]	b	C[dm^3/(s·bar)]	b
MN3GA1 MN4GA1	Two 3-port valves integrated		0.86	0.35	1.0 (0.66)	0.15 (0.25)
	2-position		1.0	0.30	1.1 (0.72)	0.11 (0.26)
	3-position	All ports closed	0.96	0.32	1.0 -	0.14 -
		ABR connection	0.96	0.29	1.2 (0.71)	0.11 (0.30)
		PAB connection	1.1	0.31	1.0 -	0.15 -
MN3GA2 MN4GA2	Two 3-port valves integrated		1.7	0.42	2.2 (1.6)	0.15 (0.19)
	2-position		2.4	0.35	2.5 (1.7)	0.19 (0.19)
	3-position	All ports closed	2.2	0.38	2.3 -	0.17 -
		ABR connection	2.2	0.38	2.5 (1.7)	0.18 (0.20)
		PAB connection	2.3	0.29	2.3 -	0.15 -

*1: Effective cross-sectional area S and sonic conductance C are converted as S ≈ 5.0 × C.
*2: Values in ( ) are with the exhaust check valve.

Reduced wiring specifications

Item	T10	T11	T30	T50	T51	T52	T53
Type	Common terminal block M3 thread	Common terminal block clamping	D-sub-connector	20-pin flat cable connector (with power supply terminal)	20-pin flat cable connector, no power supply terminal	10-pin flat cable connector, no power supply terminal	26-pin flat cable connector, no power supply terminal
Connector	—	—	D-sub-connector 25-pin	MIL-C-83503 standard compliant pressure welding socket 20-pin	MIL-C-83503 standard compliant pressure welding socket 20-pin	MIL-C-83503 standard compliant pressure welding socket 10-pin	MIL-C-83503 standard compliant pressure welding socket 26-pin

Serial transmission slave unit specifications

* The communication setting file can be downloaded from the CKD website (https://www.ckd.co.jp/en/).

Item		T6G1
Network name		CC-Link ver. 1.10
Power supply voltage	Unit side	24 VDC ±10%
	Valve side	24 VDC +10%, -5%
Current consumption	Unit side	100 mA or less (when all output points are ON)
	Valve side	15 mA or less (when all output points are OFF)
No. of I/O points		16 points
Occupied number		1 station
Operation display		LED (power supply and communication status)
Output		NPN

Item		T7G1	T7L1 *1	T7D1	T7S1	T7SP1
Network name		CC-Link ver. 1.10	SAVE NET	DeviceNet *2	CompoNet	
Power supply voltage	Unit side	24 VDC +10%, -5% Common power supply terminal				
	Valve side					
	Unit side	—	—	11 to 25 VDC *3	14.0 to 26.4 VDC	
Current consumption	Unit side	110 mA or less (when all output points are ON) Load current is not included			40 mA or less (when all output points are ON) Load current is not included	
	Valve side					
	Unit side	—	—	50 mA or less	65 mA or less (all points ON: 24 VDC) 95 mA or less (all points ON: 14 VDC)	
No. of I/O points		16 points	16 points	16 points	16 points	
Occupied number		1 station	1 station	2 bytes	Word slave 1 node (16 points)	
Operation display		LED (power supply and communication status)				
Output		NPN				PNP

Item		T8G1 / T8G2	T8GP1 / T8GP2	T8P1 / T8P2	T8PP1 / T8PP2	T8EC1 / T8EC2	T8ECP1 / T8ECP2	T8EN1 / T8EN2	T8ENP1 / T8ENP2	T8D1 / T8D2	T8DP1 / T8DP2	T8EB1 / T8EB2	T8EBP1 / T8EBP2	T8EF1 / T8EF2	T8EFP1 / T8EFP2	T8EP1 / T8EP2	T8EPP1 / T8EPP2	T8KC1 / T8KC2	T8KCP1 / T8KCP2
Communication protocol		CC-Link ver. 1.10		PROFIBUS-DP (V0)		EtherCAT		EtherNet/IP		DeviceNet		CC-Link IEF Basic		CC-Link IE Field		PROFINET		IO-Link	
Power supply voltage	Unit side	24 VDC ±10% (only the T8D* is 11 to 25 VDC)																	
	Valve side	24 VDC +10%, -5%																	
Current consumption	Unit side	60 mA or less (when all output points are ON)		60 mA or less (when all output points are ON)		110 mA or less (when all output points are ON)		120 mA or less (when all output points are ON)		70 mA or less (when all output points are ON)		130 mA or less (when all output points are ON)		140 mA or less (when all output points are ON)		130 mA or less (when all output points are ON)		50 mA or less (when all output points are ON)	
	Valve side	T8□1: 15 mA or less T8□2: 20 mA or less (When all output points are ON) Load current is not included								15 mA or less (When all output points are ON) Load current is not included									
No. of I/O points		T8□1: 16 points T8□2: 32 points																	
Occupied number		1 station																	
Operation display		LED (power supply and communication status)																	
Output		NPN output	PNP output	NPN output	PNP output	NPN output	PNP output	NPN output	PNP output	NPN output	PNP output	NPN output	PNP output	NPN output	PNP output	NPN output	PNP output	NPN output	PNP output

*1 Transmission bit rate of 128 bits and half-duplex transmission method are supported. Contact CKD for other specifications.
*2 DeviceNet compliant networks (DLNK, etc.) are supported as well.
*3 Communication power supply (V+ and V- of DeviceNet cable) is isolated from power supply terminals (unit power supply/valve power supply).

MN4GB1/2-T* Series

Reduced wiring block manifold; base piping

How to order

● Manifold model No.

MN4GB1 1 0 R - C6 - T30 W H - 10 - 3 - P70

● 3-port manifold model No.

MN3GB1 66 0 R - C6 - T30 W H - 10 - 3 - P70

● Discrete valve block with solenoid valve

N4GB1 1 0 R - C6 - A2N *1 H — 3 - P70

● Discrete 3-port valve block with solenoid valve

N3GB1 66 0 R - C6 - A2N *1 H — 3 - P70

* When a cable is required, refer to page 686 and specify the cable length for *1. When a cable is not required, leave the space blank.

● Discrete solenoid valve

4GB1 1 9 R - 00 - A2N H — 3 - P70

● Discrete 3-port solenoid valve

3GB1 66 9 R - 00 - A2N H — 3 - P70

Ⓐ Model No.
Ⓑ Solenoid position
Ⓒ Port size (*1) (*2) (*3)
Ⓓ Reduced wiring connection, serial transmission
Ⓔ Terminal/ connector pin array
Ⓕ Option
Ⓖ Station No.
Ⓗ Voltage
Ⓘ Clean room specs

Precautions for model selection

*1 : A and B port plug specifications are available for the 2-position single only.
Specify the P/R port bore size with the supply and exhaust block model No. in the manifold specifications sheet.
*2 : A and B ports are the same size for radial push-in fitting mix (CX).
*3 : For a discrete solenoid valve, select "00" for Port size.
*4 : Select MN4GB*80R when mixing with 4, 5-port valves.
Further, select MN3GB*80R when mixing with masking plate.
*5 : Not compatible with combination with external pilot (K).
Dimensions are the same as those of the respective 2-position double solenoid.
*6 : Simultaneously select option "L" for types other than single solenoid.
*7 : The push-in fitting cannot be mixed with the discrete valve's 4(A) or 2(B) port.
*8 : Available only for single solenoids.

Code	Description		Ⓐ Model No. Manifold: Two 3-port valves integrated MN3GB1	MN3GB2	Manifold: 5-port valve MN4GB1	MN4GB2	Discrete valve block + solenoid valve/Discrete solenoid valve (N)3GB1	(N)3GB2	(N)4GB1	(N)4GB2
Ⓑ Solenoid position										
1	2-position single				●	●			●	●
2	2-position double				●	●			●	●
3	3-position all ports closed				●	●			●	●
4	3-position ABR connection				●	●			●	●
5	3-position PAB connection				●	●			●	●
66	Two 3-port valves integrated (*4) (*5)	A side valve: Normally closed B side valve: Normally closed	●	●			●	●		
67		A side valve: Normally closed B side valve: Normally open	●	●			●	●		
76		A side valve: Normally open B side valve: Normally closed	●	●			●	●		
77		A side valve: Normally open B side valve: Normally open	●	●			●	●		
8	Mix manifold (for multiple solenoid positions)		●	●	●	●	●	●	●	●
Ⓒ Port size (A/B-port)										
Code	**Metric fitting/Rc thread**									
CF	ø1.8 barbed fitting (compatible tube UP-9102-**)		●		●		●		●	
C18	ø1.8 push-in fitting (compatible tube UP-9402-**)		●		●		●		●	
C4	ø4 push-in fitting		●	●	●	●	●	●	●	●
C6	ø6 push-in fitting		●	●	●	●	●	●	●	●
C8	ø8 push-in fitting			●		●		●		●
CL18	Radial ø1.8 push-in fitting upward (compatible tube UP-9402-**)	(*6)	●		●		●		●	
CL4	Radial ø4 push-in L fitting upward	(*6)	●		●		●		●	
CL6	Radial ø6 push-in fitting (upward)	(*6)	●	●	●	●	●	●	●	●
CL8	Radial ø8 push-in fitting (upward)	(*6)		●		●		●		●
CD18	Radial ø1.8 push-in fitting downward (compatible tube UP-9402-**)		●		●		●		●	
CD4	Radial ø4 push-in fitting (downward)		●		●		●		●	
CD6	Radial ø6 push-in fitting (downward)		●	●	●	●	●	●	●	●
CD8	Radial ø8 push-in fitting (downward)			●		●		●		●
CX	Push-in fitting mix	(*7)	●	●	●	●				
Single, plug specs	A port	B port								
CFNC	ø1.8 barbed (tube UP-9102-**)	Plug			●				●	
C18NC	ø1.8 push-in (tube UP-9402-**)	Plug			●				●	
C4NC	ø4 push-in fitting	Plug			●	●			●	●
C6NC	ø6 push-in fitting	Plug			●	●			●	●
C8NC	ø8 push-in fitting	Plug				●				●
CFNO	Plug	ø1.8 barbed fitting (compatible tube UP-9102-**)			●				●	
C18NO	Plug	ø1.8 push-in fitting (compatible tube UP-9402-**)			●				●	
C4NO	Plug	ø4 push-in fitting			●	●			●	●
C6NO	Plug	ø6 push-in fitting			●	●			●	●
C8NO	Plug	ø8 push-in fitting				●				●
CL18NC	Radial ø1.8 push-in upward (tube UP-9402-**)	Plug			●				●	
CL4NC	Radial ø4 push-in fitting (upward)	Plug			●				●	
CL6NC	Radial ø6 push-in fitting (upward)	Plug			●	●			●	●
CL8NC	Radial ø8 push-in fitting (upward)	Plug				●				●
CL18NO	Plug	Radial ø1.8 push-in upward (tube UP-9402-**)			●				●	
CL4NO	Plug	Radial ø4 push-in fitting (upward)			●				●	
CL6NO	Plug	Radial ø6 push-in fitting (upward)			●	●			●	●
CL8NO	Plug	Radial ø8 push-in fitting (upward)				●				●
CD18NC	Radial ø1.8 push-in downward (tube UP-9402-**)	Plug			●				●	
CD4NC	Radial ø4 push-in fitting (downward)	Plug			●				●	
CD6NC	Radial ø6 push-in fitting (downward)	Plug			●	●			●	●
CD8NC	Radial ø8 push-in fitting (downward)	Plug				●				●
CD18NO	Plug	Radial ø1.8 push-in downward (tube UP-9402-**)			●				●	
CD4NO	Plug	Radial ø4 push-in fitting (downward)			●				●	
CD6NO	Plug	Radial ø6 push-in fitting (downward)			●	●			●	●
CD8NO	Plug	Radial ø8 push-in fitting (downward)				●				●
Code	**Inch fitting/inch thread**									
C3N	ø1/8" push-in fitting		●		●		●		●	
C4N	ø5/32" push-in fitting		●		●		●		●	
C6N	ø1/4" push-in fitting			●		●		●		●
C8N	ø5/16" push-in fitting			●		●		●		●
CL3N	Radial ø1/8" push-in fitting upward	(*8)	○		○		○		○	
CL4N	Radial ø5/32" push-in fitting upward	(*8)	○		○		○		○	
CL6N	Radial ø1/4" push-in fitting upward	(*8)		○		○		○		○
CL8N	Radial ø5/16" push-in fitting upward	(*8)		○		○		○		○
CXN	Push-in fitting mix	(*7)	●	●	●	●				
Single, plug specs	A port	B port								
C3NCN	ø1/8" push-in fitting	Plug			●				●	
C4NCN	ø5/32" push-in fitting	Plug			●				●	
C6NCN	ø1/4" push-in fitting	Plug				●				●
C8NCN	ø5/16" push-in fitting	Plug				●				●
C3NON	Plug	ø1/8" push-in fitting			●				●	
C4NON	Plug	ø5/32" push-in fitting			●				●	
C6NON	Plug	ø1/4" push-in fitting				●				●
C8NON	Plug	ø5/16" push-in fitting				●				●
CL3NCN	Radial ø1/8" push-in fitting (upward)	Plug			○				○	
CL4NCN	Radial ø5/32" push-in fitting (upward)	Plug			○				○	
CL6NCN	Radial ø1/4" push-in fitting (upward)	Plug				○				○
CL8NCN	Radial ø5/16" push-in fitting (upward)	Plug				○				○
CL3NON	Plug	Radial ø1/8" push-in fitting (upward)			○				○	
CL4NON	Plug	Radial ø5/32" push-in fitting (upward)			○				○	
CL6NON	Plug	Radial ø1/4" push-in fitting (upward)				○				○
CL8NON	Plug	Radial ø5/16" push-in fitting (upward)				○				○
00	Discrete valve for mounting base						●	●	●	●

is not available.
○ indicates a custom order.

[Port size/wiring method list]

Code	Description		Ⓐ Model No. Manifold: Two 3-port valves integrated MN3GB1	MN3GB2	5-port valve MN4GB1	MN4GB2	Single unit valve block with solenoid valve/single unit solenoid valve (N)3GB1	(N)3GB2	(N)4GB1	(N)4GB2
Ⓓ Reduced wiring connection (lamp and surge suppressor equipped as standard) 12/24 VDC										
T10	Common terminal block (M3 thread)	Left-sided specifications	●	●	●	●				
T10R		Right-sided specifications	●	●	●	●				
T11	Common terminal block (clamping)	Left-sided specifications	●	●	●	●				
T11R		Right-sided specifications	●	●	●	●				
T30	D-sub-connector	Left-sided specifications	●	●	●	●				
T30R		Right-sided specifications	●	●	●	●				
T50	20-pin flat cable connector (with power supply terminal)	Left-sided specifications	●	●	●	●				
T50R		Right-sided specifications	●	●	●	●				
T51	20-pin flat cable connector (without power supply terminal)	Left-sided specifications	●	●	●	●				
T51R		Right-sided specifications	●	●	●	●				
T52	10-pin flat cable connector (without power supply terminal)	Left-sided specifications	●	●	●	●				
T52R		Right-sided specifications	●	●	●	●				
T53	26-pin flat cable connector (without power supply terminal)	Left-sided specifications	●	●	●	●				
T53R		Right-sided specifications	●	●	●	●				
Ⓓ Serial transmission (lamp/surge suppressor equipped as standard) 24 VDC										
T6G1	CC-Link	NPN 16 points	●	●	●	●				
T7D1	DeviceNet	NPN 16 points	●	●	●	●				
T7G1	CC-Link	NPN 16 points	●	●	●	●				
T7L1	SAVE NET	NPN 16 points	●	●	●	●				
T7S1	CompoNet	NPN 16 points	●	●	●	●				
T7SP1		PNP 16 points	●	●	●	●				
T8G1	CC-Link	NPN 16 points	●	●	●	●				
T8G2		NPN 32 points	●	●	●	●				
T8GP1		PNP 16 points	●	●	●	●				
T8GP2		PNP 32 points	●	●	●	●				
T8P1	PROFIBUS-DP	NPN 16 points	●	●	●	●				
T8P2		NPN 32 points	●	●	●	●				
T8PP1		PNP 16 points	●	●	●	●				
T8PP2		PNP 32 points	●	●	●	●				
T8EC1	EtherCAT	NPN 16 points	●	●	●	●				
T8EC2		NPN 32 points	●	●	●	●				
T8ECP1		PNP 16 points	●	●	●	●				
T8ECP2		PNP 32 points	●	●	●	●				
T8EN1	EtherNet/IP	NPN 16 points	●	●	●	●				
T8EN2		NPN 32 points	●	●	●	●				
T8ENP1		PNP 16 points	●	●	●	●				
T8ENP2		PNP 32 points	●	●	●	●				
T8D1	DeviceNet	NPN 16 points	●	●	●	●				
T8D2		NPN 32 points	●	●	●	●				
T8DP1		PNP 16 points	●	●	●	●				
T8DP2		PNP 32 points	●	●	●	●				
T8EB1	CC-Link IEF Basic	NPN 16 points	●	●	●	●				
T8EB2		NPN 32 points	●	●	●	●				
T8EBP1		PNP 16 points	●	●	●	●				
T8EBP2		PNP 32 points	●	●	●	●				
T8EP1	PROFINET	NPN 16 points	●	●	●	●				
T8EP2		NPN 32 points	●	●	●	●				
T8EPP1		PNP 16 points	●	●	●	●				
T8EPP2		PNP 32 points	●	●	●	●				
A2N	Without lead wire (without socket)	with surge suppressor and indicator lamp					●	●	●	●
Ⓔ Terminal/connector pin array										
Blank	Standard wiring (*9)		●	●	●	●	●	●	●	●
W	Double wiring (*9)		●	●	●	●	●	●	●	●
W1	Double wiring (with single spare wiring) (*9) (*10)		●	●	●	●	●	●	●	●
Ⓕ Option										
Blank	Non-locking/locking common manual override		●	●	●	●	●	●	●	●
M	Non-locking manual override		●	●	●	●	●	●	●	●
H	With exhaust check valve (*11)		●	●	●	●	●	●	●	●
K	External pilot (*12)				●	●			●	●
A	Ozone/coolant proof		●	●	●	●	●	●	●	●
S	Surgeless (*13)		●	●	●	●	●	●	●	●
E	Low exoergic/energy saving circuit (*13) (*14)		●	●	●	●	●	●	●	●
L	With pipe adaptor		●	●	●	●	●	●	●	●
Q	Reduced wiring duct (*17)		●	●	●	●	●	●	●	●
F	A/B port filter integrated (*15)		●	●	●	●	●	●	●	●
Z1	Air supply spacer (*16)		●	●	●	●				
Z3	Exhaust spacer (*16)		●	●	●	●				
Ⓖ Station No.										
1	1 station		●	●	●	●				
to	to									
24	24 stations (Max. station number for MN4GB2 is 20.)									
Ⓗ Voltage										
3	24 VDC		●	●	●	●	●	●	●	●
4	12 VDC Copper-/silicon-/halogen-based materials (fluorine, chlorine, bromine) are prohibited		●	●	●	●	●	●	●	●

Ⓘ Clean room specifications (*18, 19, 20)										
	Structure	Material restriction								
P70	Exhaust treatment	—	●	●	●	●	●	●	●	●
P74	Exhaust treatment	Copper-/silicon-/halogen-based materials (fluorine, chlorine, bromine) are prohibited	○	○	○	○	○	○	○	○

Ozone-proof specifications · Coolant proof specifications

Can be selected with "How to order" Item Ⓕ option "A" above.

⚠ Precautions for model selection

*9: Blank: The wiring will be based on the type of valve used.
W*: All wired for double solenoid valves regardless of the type of valve used.

***10: Spare wiring (A type socket assembly) is included on the cap side for single types. A holder for retaining the socket assembly is included for single unit valves (A2N). For details, refer to page 697. Not compatible with combination with port size C*NC or C*NO.**

***11: 3-position all ports closed and PAB connection are not provided with the exhaust check valve specifications (H). Refer to page 751 for details on the exhaust check valve.**

*12: Consult with CKD when using vacuum with external pilot (K).

*13: In addition, surgeless "S" and low exoergic/energy saving circuit "E" cannot be selected together.

*14: Surgeless specifications.

*15: A filter is built into port P as standard.

***16: Specify the spacer mounting position and quantity on the manifold specifications sheet. Stacking of spacers is not possible. Combination with the masking plate is not supported. Cannot be selected together with radial push-in fitting (upward). For details, refer to page 693 to page 696.**

*17: When radial upward push-in fittings are selected, only 2-position single is supported.

*18: Combination of A and Item I (Ozone-proof) clean-room specifications P74 is not available.

*19: Copper-, silicon-, and halogen-free specifications are available as main valve part support.

*20: P74 Series is made to order.

Manifold components explanation and parts list

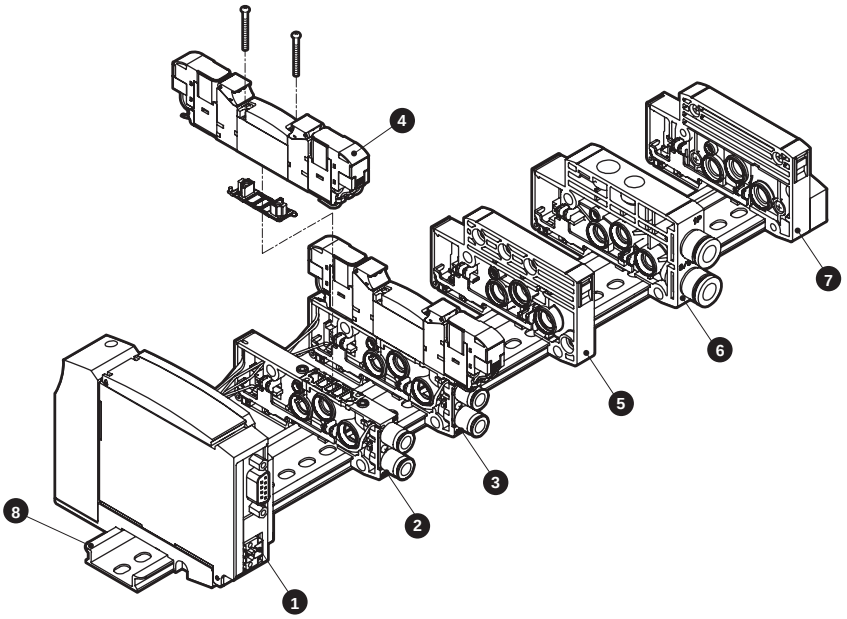

List of main components (refer to pages 682 to 698 for details)

No.	Component name	Model No. (example)	No.	Component name	Model No. (example)
1	Wiring block (*)	N4G1R-T8P1-P70	5	Partition block	N4G1R-S-P70/P74
2	Discrete valve block	N4GB1R-V2-C6-P70/P74	6	Supply and exhaust block	N4G1R-Q-8-P70/P74
3	Discrete valve block with solenoid valve	N4GB120R-C6-A2NH-3-P70/P74	7	End block R	N4G1R-ER-P70/P74
4	Solenoid valve body	4GB129R-00-A2NH-3-P70/P74	8	DIN rail	N4GR-BAA (Length)-P70

Note: Wiring block cannot be ordered as a single item.

B type reduced wiring weight

4GB1

(g)

Part name	Model No.	Weight	Part name	Model No.	Weight	Part name	Model No.	Weight
Valve block with solenoid valve	N4GB110R-C6-A2N-3	69	End block	N4G1R-E*	60	Wiring block	N4G1R-T10(R)	207
	N4GB120R-C6-A2N-3	88		N4G1R-EX*	60		N4G1R-T30(R)	165
	N4GB1 $\frac{2}{3}$ 0R-C6-A2N-3	89	Partition block	N4G1R-S	45		N4G1R-T50(R)	167
	N3GB1660R-C6-A2N-3	88	Valve block	N4GB1R-V1-C*	33		N4G1R-T6G1	295
Valve block with masking plate	N4GB1R-MP*-C6	37		N4GB1R-V2-C*	35		N4G1R-T7*	203
Supply and exhaust block	N4G1R-Q-8	58	DIN rail	N4GR-BAA (Length)	0.19/mm		N4G1R-T8*	229
	N4G1R-QK-8	60						

Note: Wiring block cannot be ordered as a single item.

4GB2

(g)

Part name	Model No.	Weight	Part name	Model No.	Weight	Part name	Model No.	Weight
Valve block with solenoid valve	N4GB210R-C8-A2N-3	130	End block	N4G2R-E*	84	Wiring block	N4G2R-T10(R)	223
	N4GB220R-C8-A2N-3	149		N4G2R-EX*	85		N4G2R-T30(R)	182
	N4GB2 $\frac{2}{3}$ 0R-C8-A2N-3	160	Partition block	N4G2R-S	60		N4G2R-T50(R)	184
	N3GB2660R-C8-A2N-3	149	Valve block	N4GB2R-V1-C*	55		N4G2R-T6G1	312
Valve block with masking plate	N4GB2R-MP*-C*	69		N4GB2R-V2-C*	57		N4G2R-T7*	204
Supply and exhaust block	N4G2R-Q-10	83	DIN rail	N4GR-BAA (Length)	0.19/mm		N4G2R-T8*	242
	N4G2R-QK-10	85						

Note: Wiring block cannot be ordered as a single item.

Parts list

Applicable	Part name	Model No.
Valve 4G1	ø1.8 barbed	4G1R-JOINT-CF-P70
	ø1.8 straight	4G1R-JOINT-C18-P70
	ø4 straight	4G1R-JOINT-C4-P70
	ø6 straight	4G1R-JOINT-C6-P70
	ø1.8 elbow	4G1R-JOINT-CL18, CLL18-P70
	ø4 elbow	4G1R-JOINT-CL4, CLL4-P70
	ø6 elbow	4G1R-JOINT-CL6, CLL6-P70
	ø1/8” straight	4G1R-JOINT-C3N-P70
	ø5/32” straight	4G1R-JOINT-C4N-P70
	ø1/8” elbow *1	4G1R-JOINT-CL3N-P70
	ø5/32” elbow *1	4G1R-JOINT-CL4N-P70
	Plug cartridge	4G1R-JOINT-CPG-P70
Valve 4G2	ø4 straight	4G2R-JOINT-C4-P70
	ø6 straight	4G2R-JOINT-C6-P70
	ø8 straight	4G2R-JOINT-C8-P70
	ø6 elbow	4G2R-JOINT-CL6, CLL6-P70
	ø8 elbow	4G2R-JOINT-CL8, CLL8-P70
	ø1/4” straight	4G2R-JOINT-C6N-P70
	ø5/16” straight	4G2R-JOINT-C8N-P70

Applicable	Part name	Model No.
Valve 4G2	ø1/4” elbow *1	4G2R-JOINT-CL6N-P70
	ø5/16” elbow *1	4G2R-JOINT-CL8N-P70
	Plug cartridge	4G2R-JOINT-CPG-P70
Common	Coil assembly	4GR-A2N-[*2]-COIL-[*3]-P70 *2: Ozone/coolant proof (blank, A) Surgeless (S) Low exoergic/energy circuit (E) *3: Voltage (1, 3, 4)
Manifold	Expansion socket assembly (Details on page 737)	For a side solenoid N4GR-SOCKET-ASSY-[selection No.]-P70
		For b side solenoid N4GR-RELAY-SOCKET-[selection No.]-P70

*1: Available as custom order.

Dimensions

MN4GB1-P7*

Note: The two 3-port valve integrated have the same dimensions as the double.

● Common terminal block (M3 thread) left side (T10)
Note: Clamping specification (T11) is also available.
Dimensions are the same as T10.

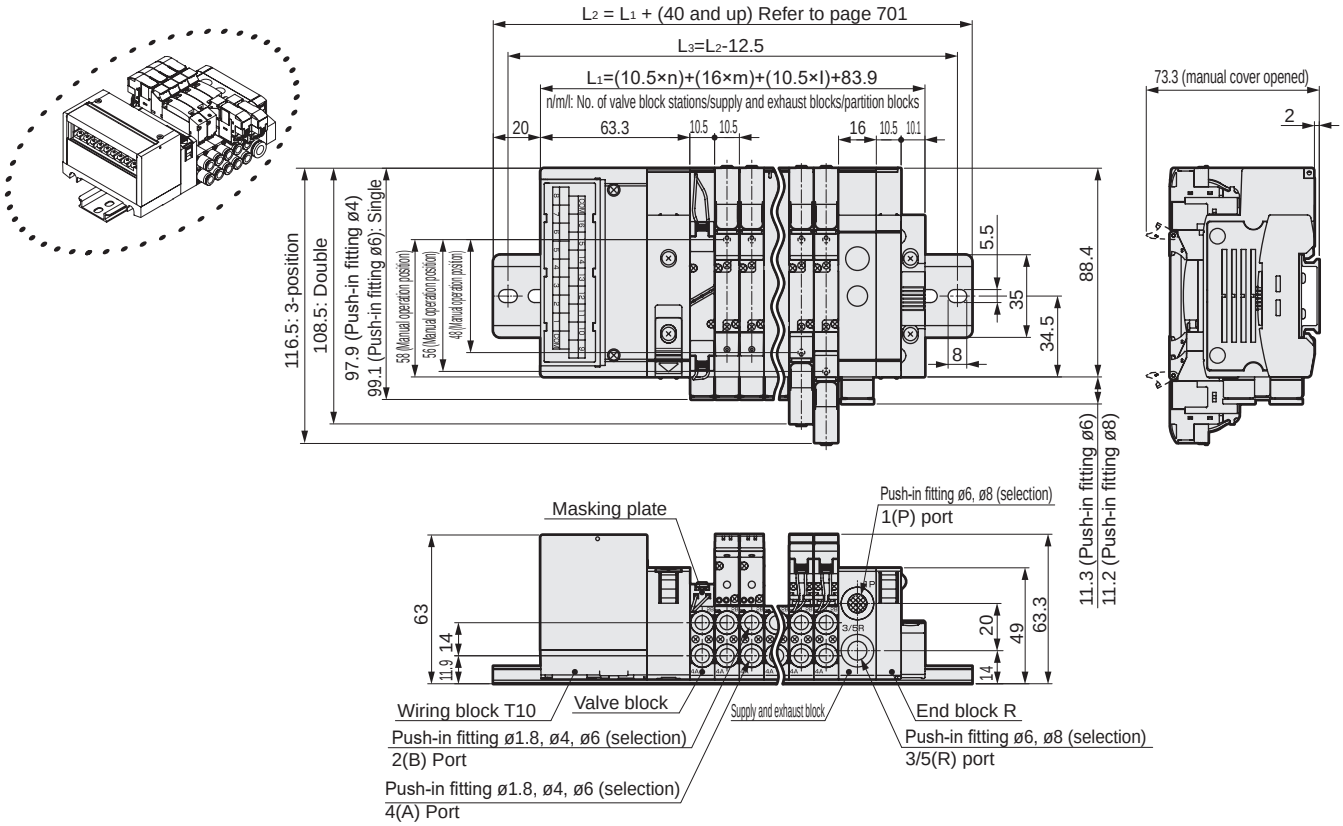

Note: Refer to page 676 for dimensions of the radial push-in fitting.

● Common terminal block (M3 thread) right side (T10R)
Note: Clamping specification (T11R) is also available.
Dimensions are the same as T10R.

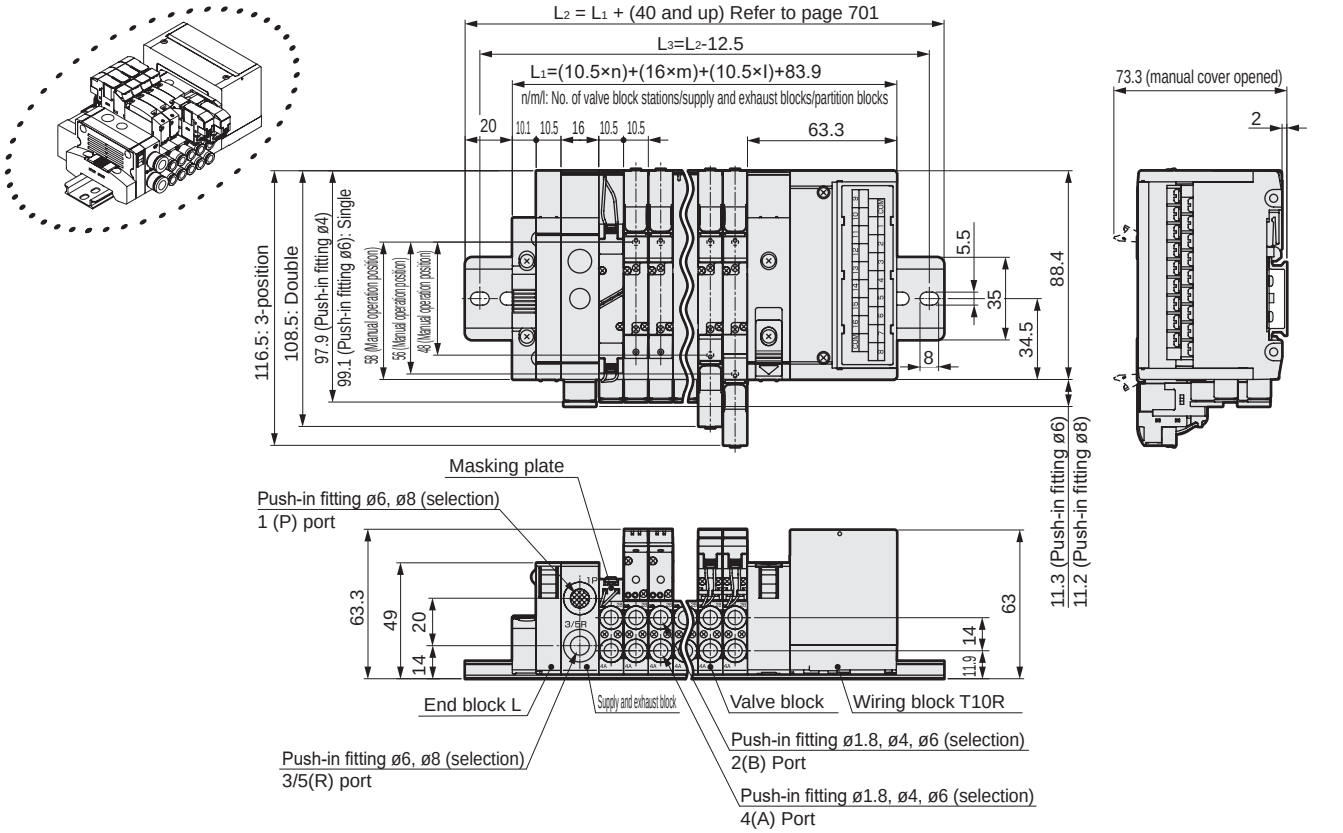

Dimensions

SCPD3
SCM
SSD2
MDC2
SMG
LCM
LCR
LCG
LCX
STM
STG
STR2
MRL2
GRC
Cylinder switch
MN3E MN4E
4GA/B
M4GA/B
MN4GA/B
F.R (module unit)
Clean F.R
Precision R
Press gauge Diff. press gauge
Electro-pneumatic R
Speed controller
Auxiliary valve
Fitting/ tube
Clean air unit
Pressure sensor
Flow rate sensor
Valve for air blow
Ending

MN4GB2-P7*

Note: The two 3-port valve integrated have the same dimensions as the double.

● Common terminal block (M3 thread) left side (T10)

Note: Clamping specification (T11) is also available.
Dimensions are the same as T10.

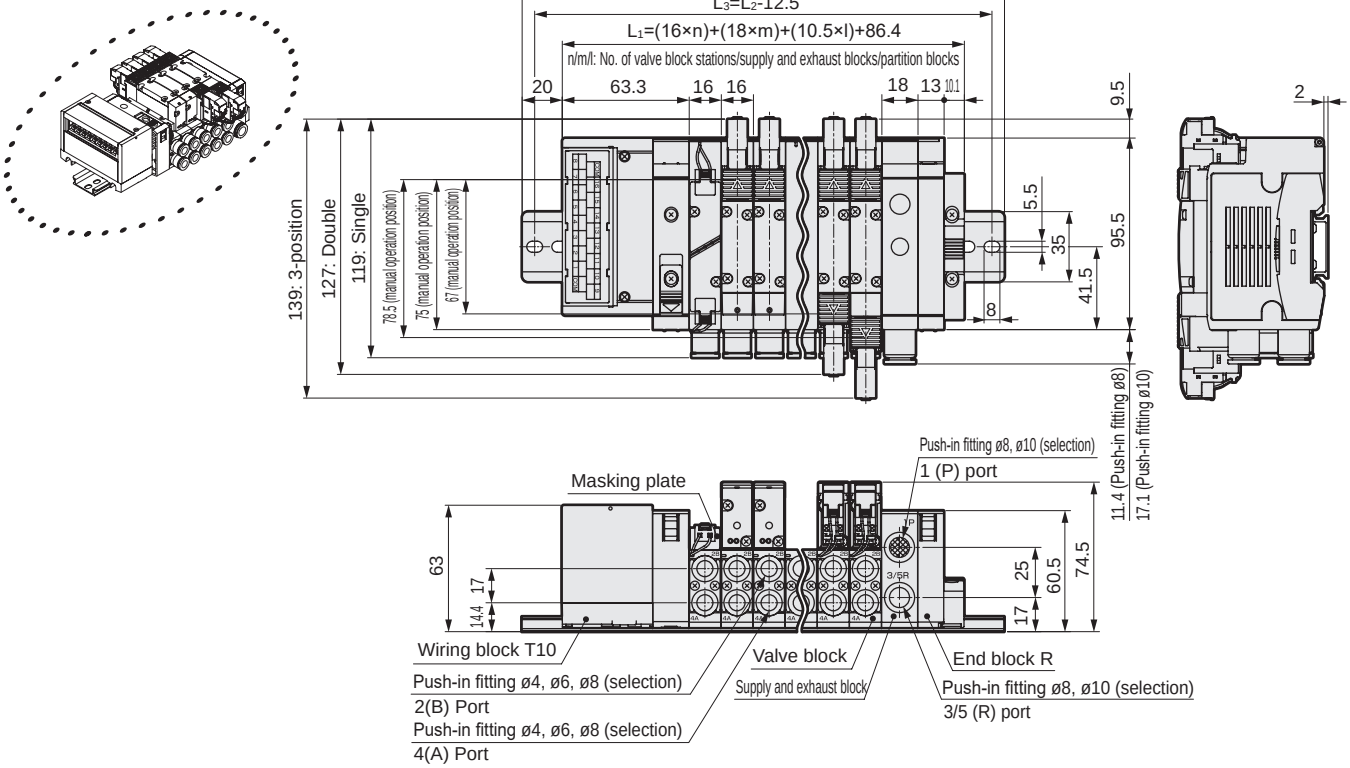

● Common terminal block (M3 thread) right side (T10R)

Note: Clamping specification (T11R) is also available.
Dimensions are the same as T10R.

Note: Refer to page 678 for dimensions of the radial push-in fitting.

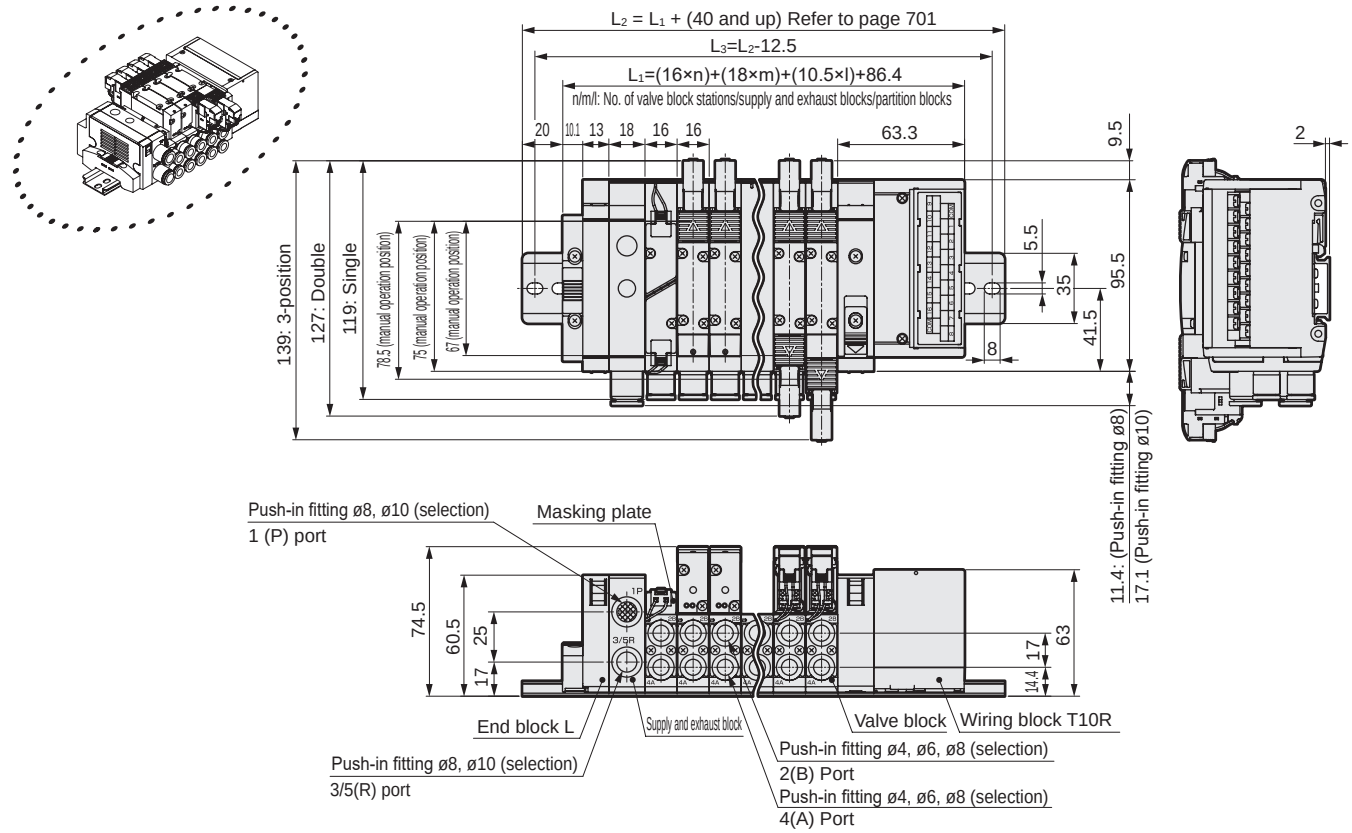

Dimensions

MN4GB1-P7*

Note: The two 3-port valve integrated have the same dimensions as the double.

● D sub-connector left side (T30)

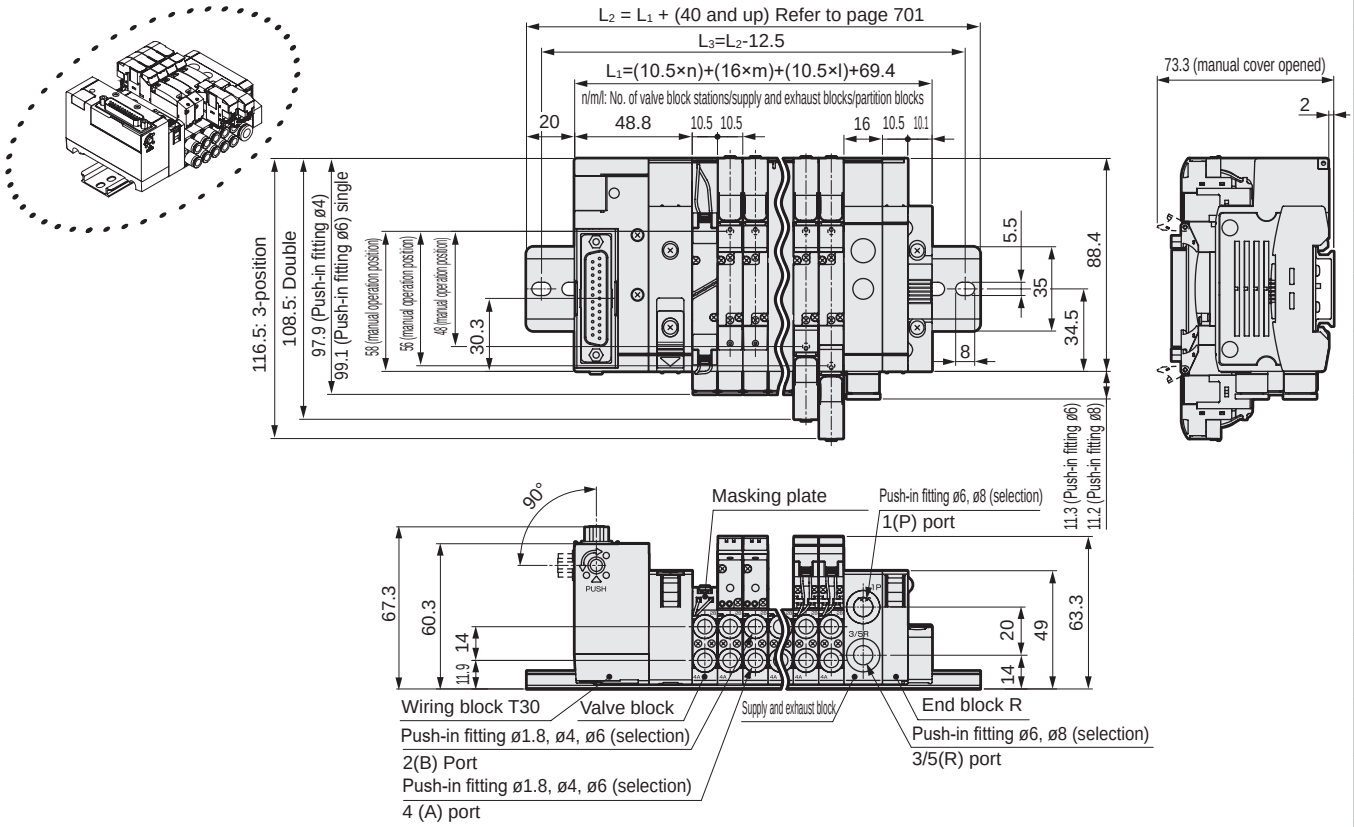

● D sub-connector right side (T30R)

Note: Refer to page 676 for dimensions of the radial push-in fitting.

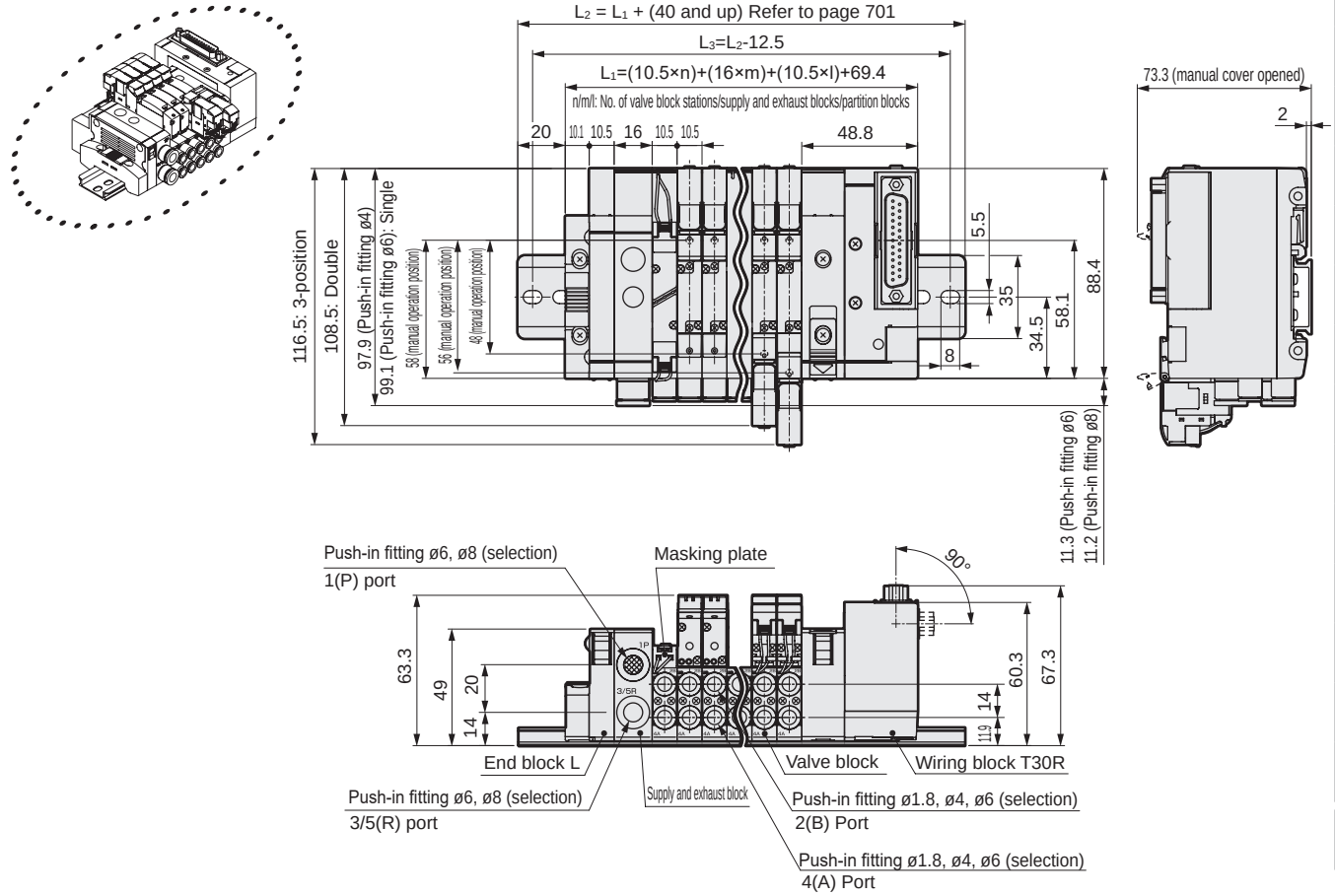

MN4GB2-T30 Series

Reduced wiring block manifold; base piping

Dimensions

CAD

MN4GB2-P7*

Note: The two 3-port valve integrated have the same dimensions as the double.

● D sub-connector left side (T30)

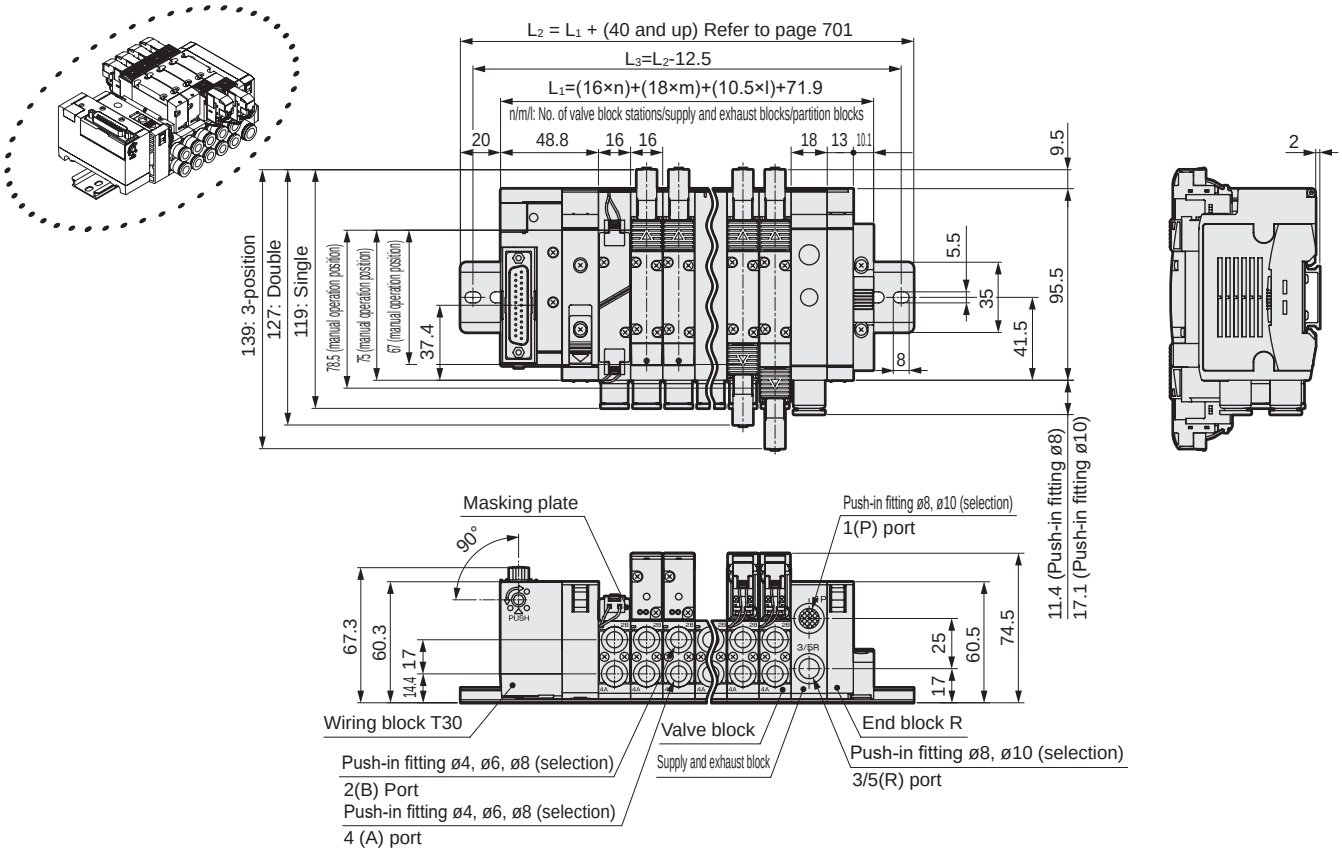

● D sub-connector right side (T30R)

Note: Refer to page 678 for dimensions of the radial push-in fitting.

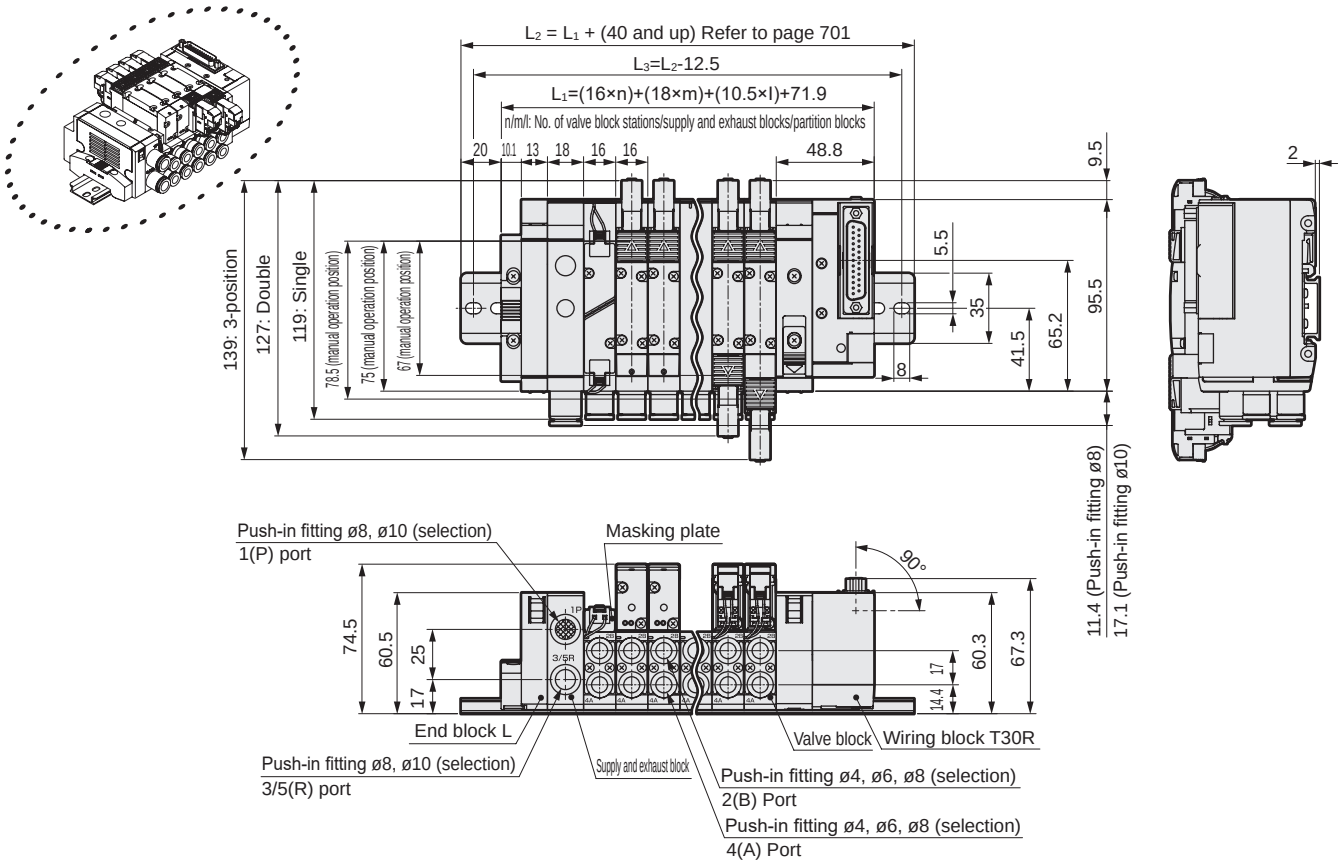

Dimensions

MN4GB1-P7*

*1: T51, T52, and T53 are also available as flat cable connector. Dimensions are the same as T50.
*2: The two 3-port valve integrated have the same dimensions as the double.

● Flat cable connector left side (T50) with power supply terminal

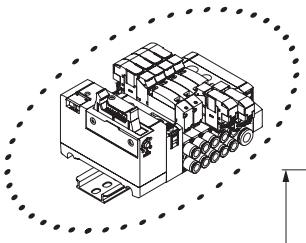

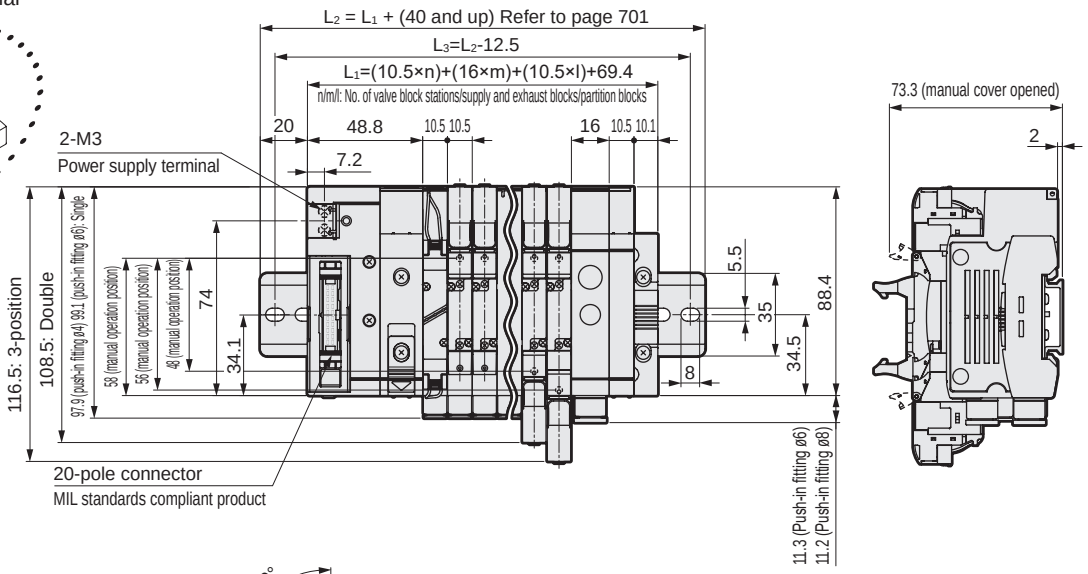

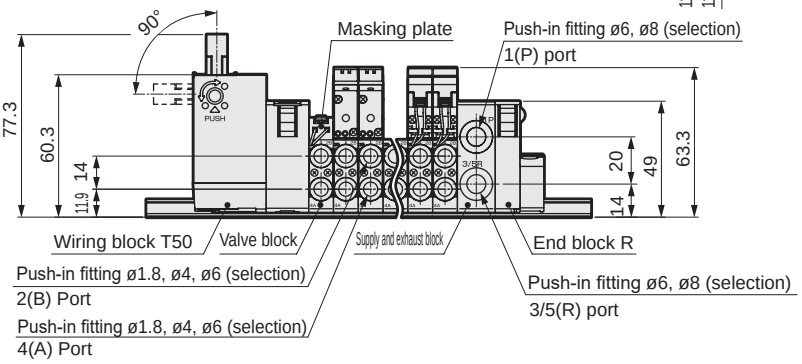

● Flat cable connector right side (T50R) with power supply terminal

Note: Refer to page 676 for dimensions of the radial push-in fitting.

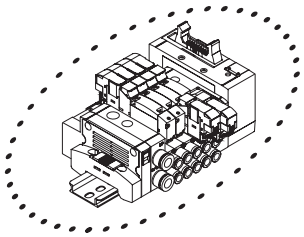

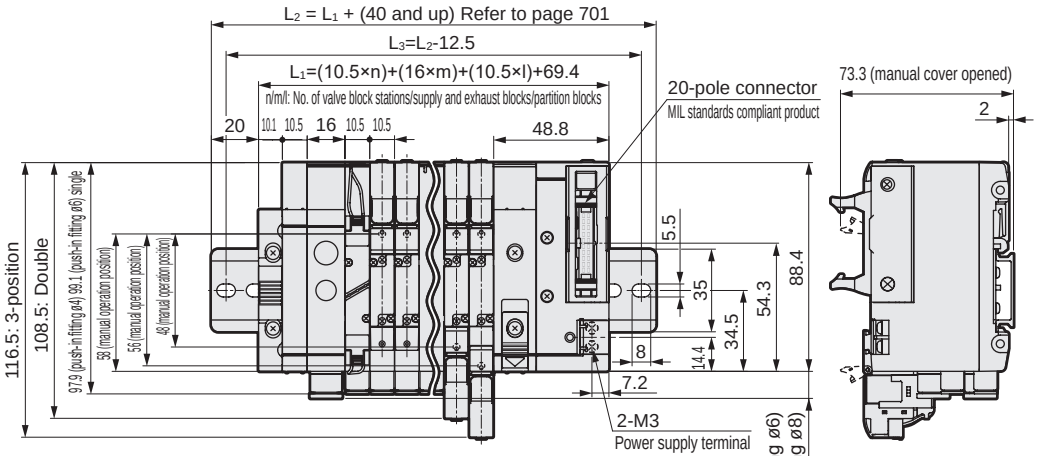

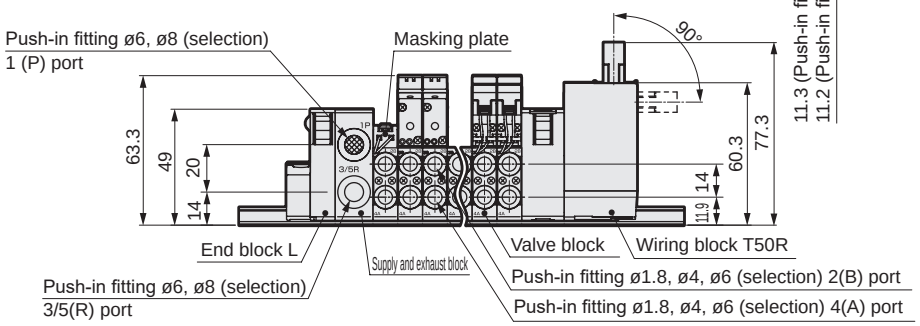

MN4GB2-T50 Series

Reduced wiring block manifold; base piping

Dimensions CAD

MN4GB2-P7*

*1: T51, T52, and T53 are also available as flat cable connector. Dimensions are the same as T50.
*2: The two 3-port valve integrated have the same dimensions as the double.

● Flat cable connector left side with power supply terminal (T50)

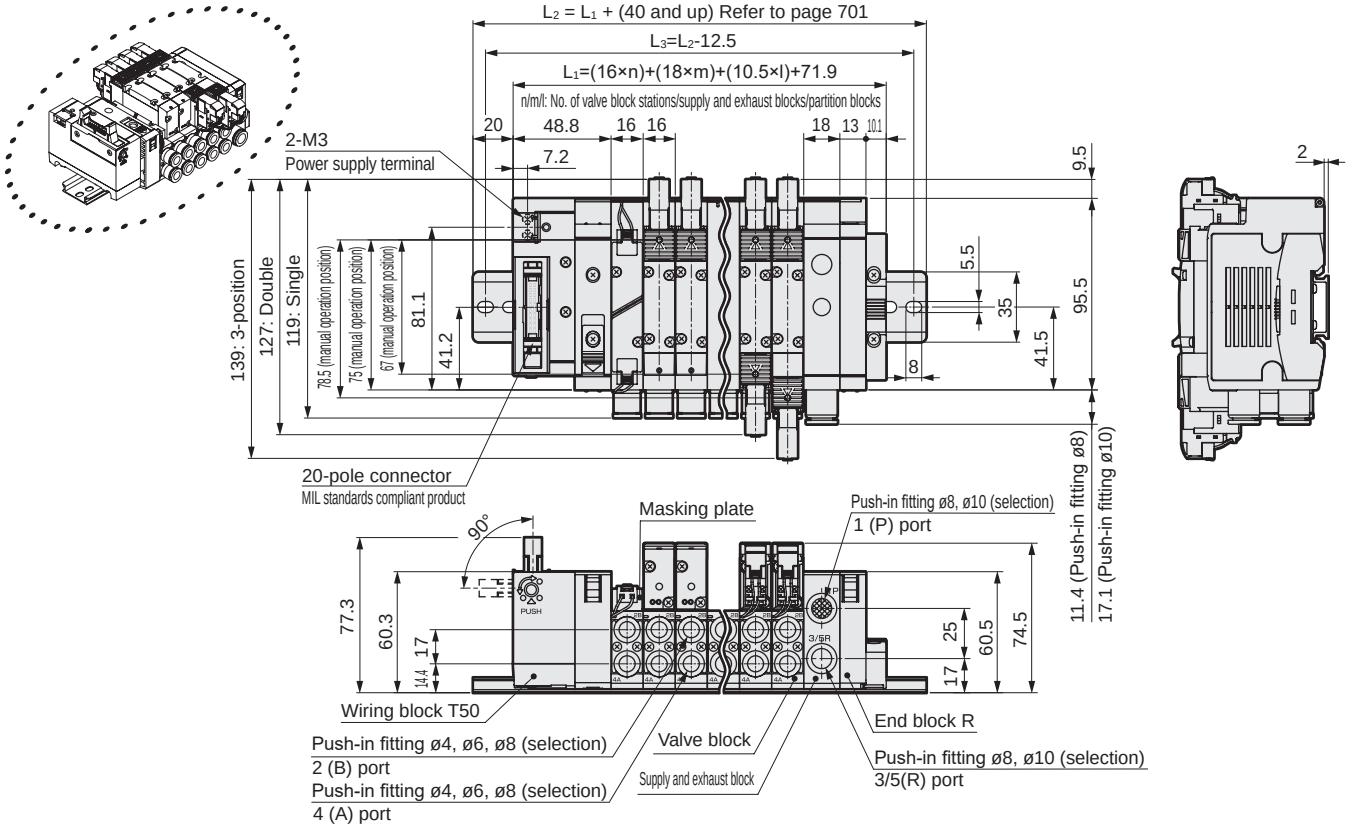

● Flat cable connector right side with power supply terminal (T50R)

Note: Refer to page 678 for dimensions of the radial push-in fitting.

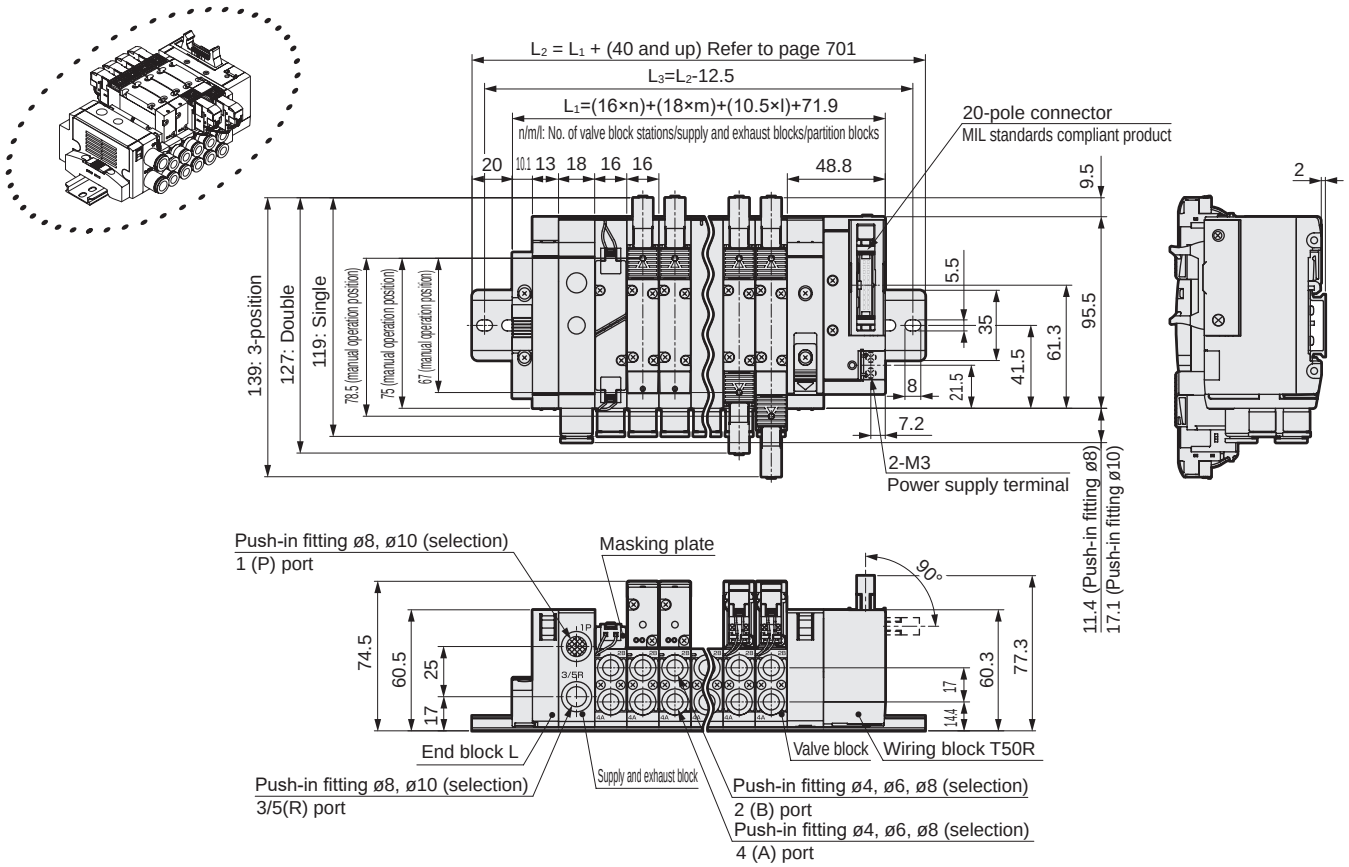

Dimensions

MN4GB1-P7*

Note: The two 3-port valve integrated have the same dimensions as the double.

● Serial transmission (T6G1)

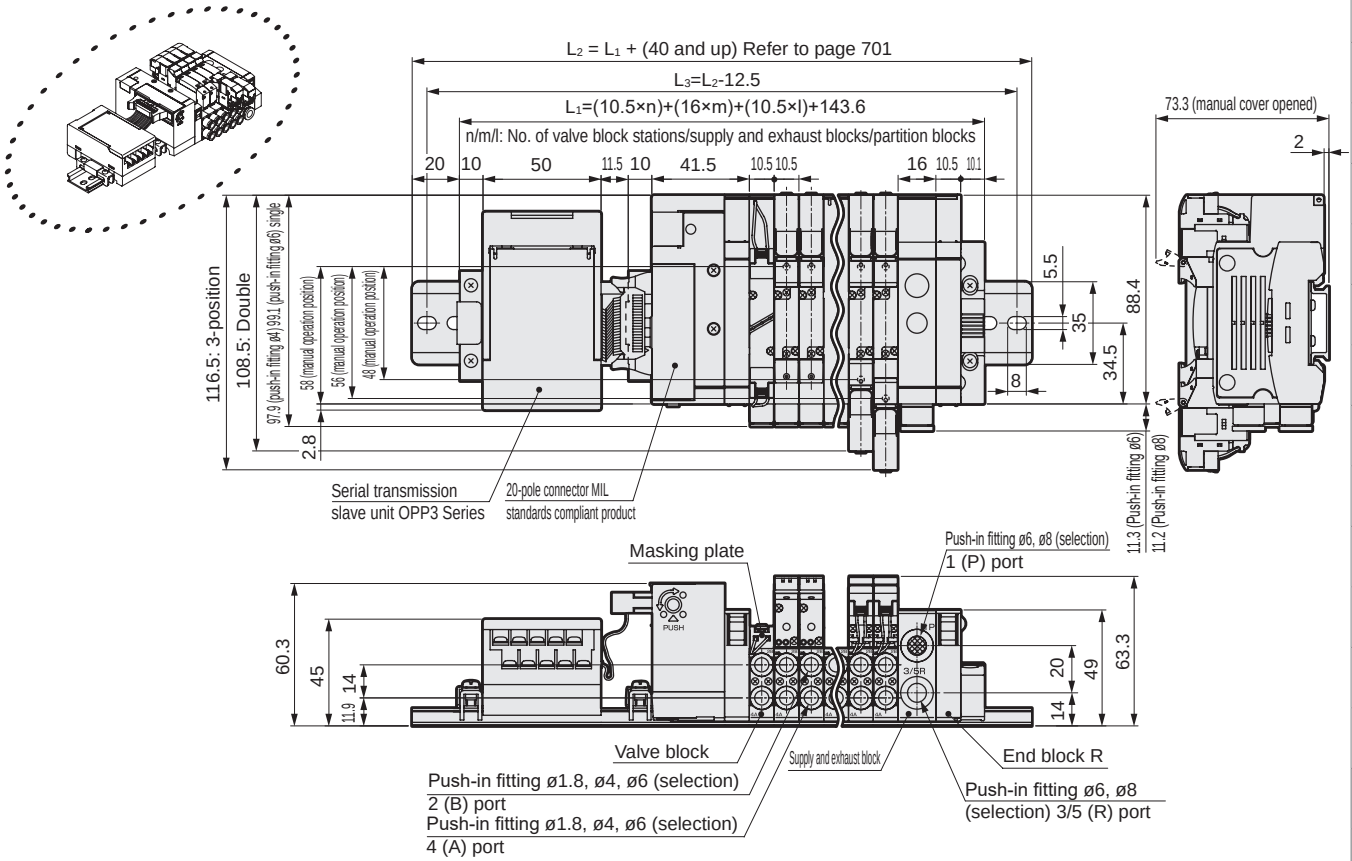

MN4GB2-P7*

Note: Refer to pages 676 and 678 for dimensions of the radial push-in fitting.

● Serial transmission (T6G1)

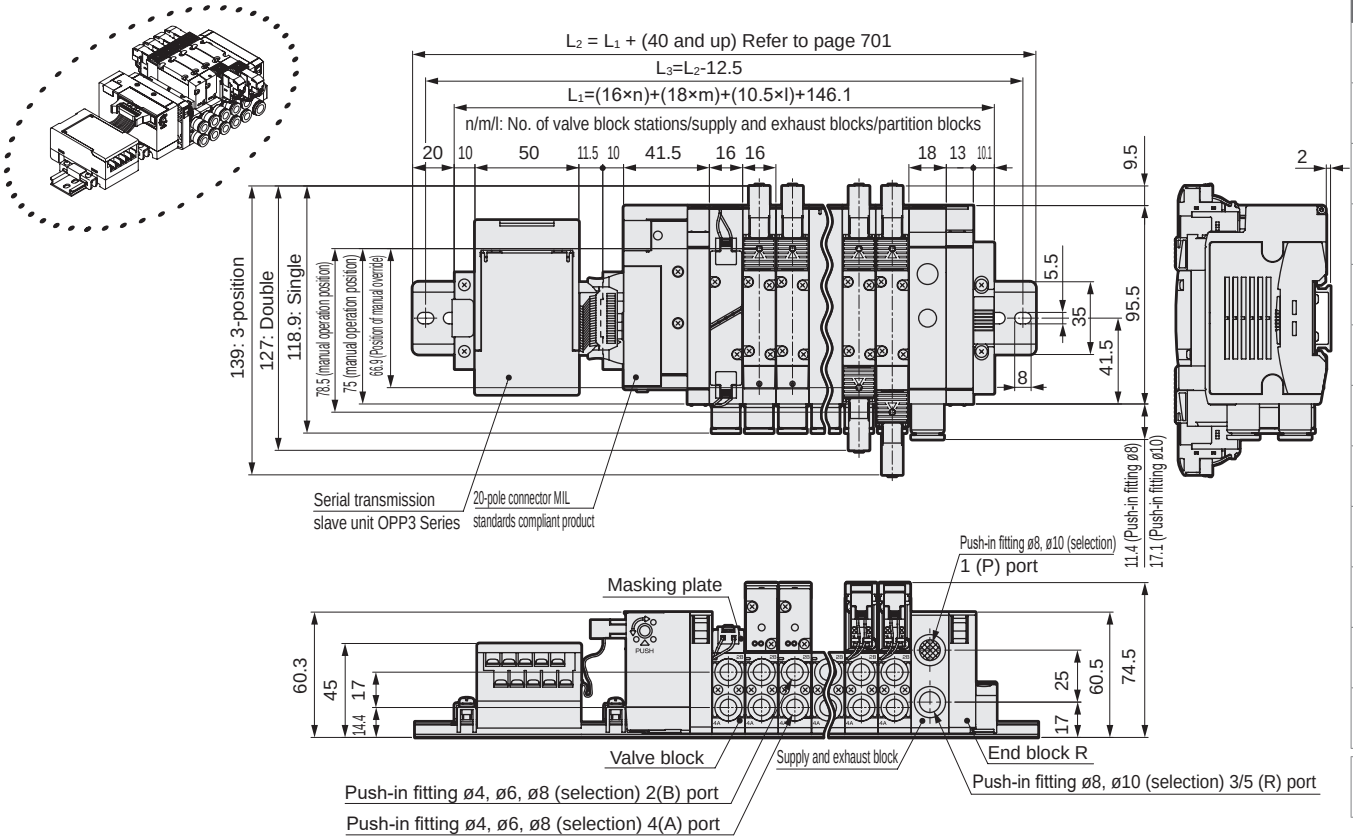

MN4GB1/2-T7* Series

Reduced wiring block manifold; base piping

Dimensions

MN4GB1-P7*

Note: The two 3-port valve integrated have the same dimensions as the double.

● Thin serial transmission (T7□)

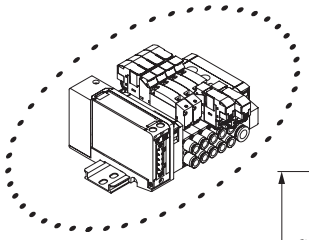

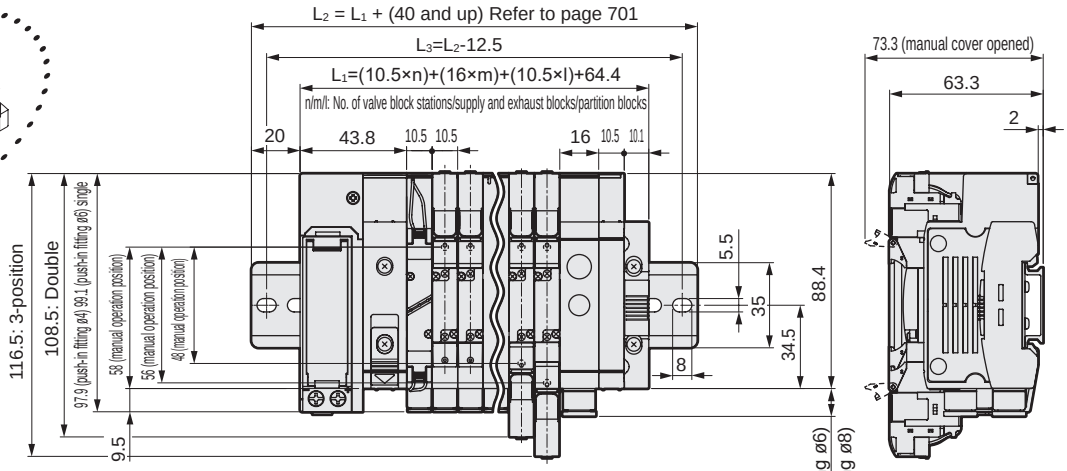

For T7S□1

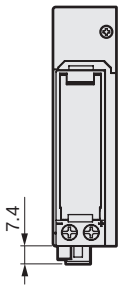

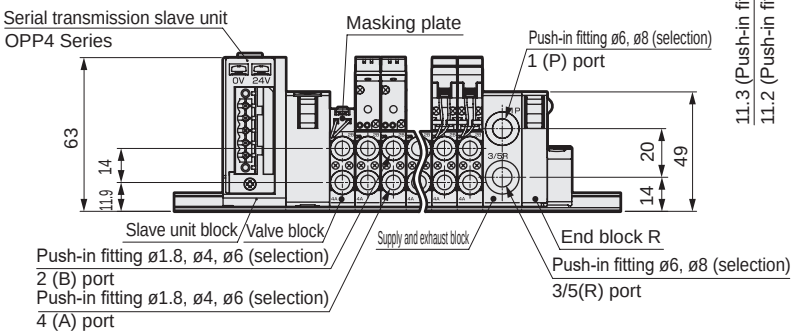

MN4GB2-P7*

Note: Refer to pages 676 and 678 for dimensions of the radial push-in fitting.

● Thin serial transmission (T7□)

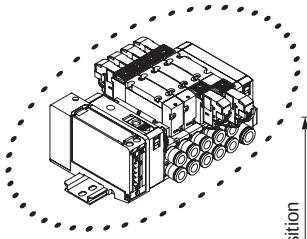

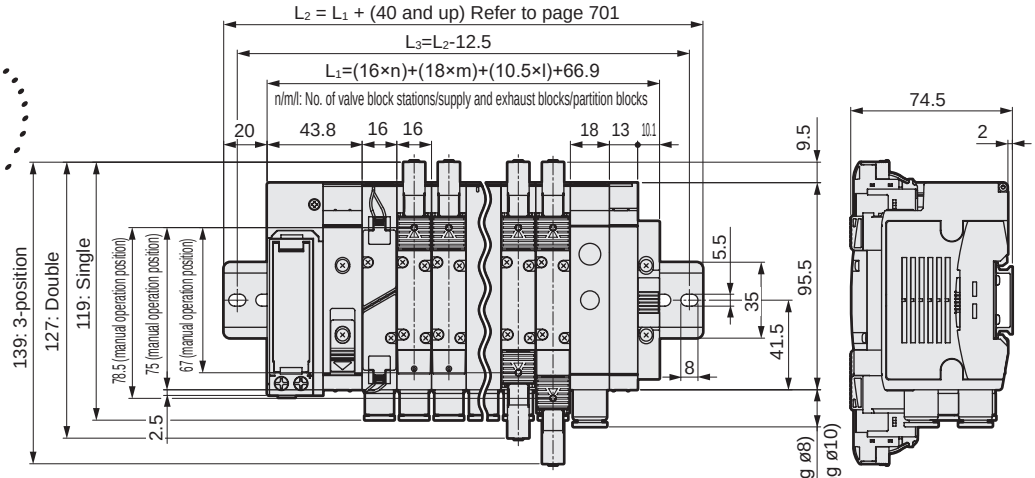

For T7S□1

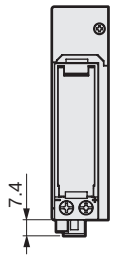

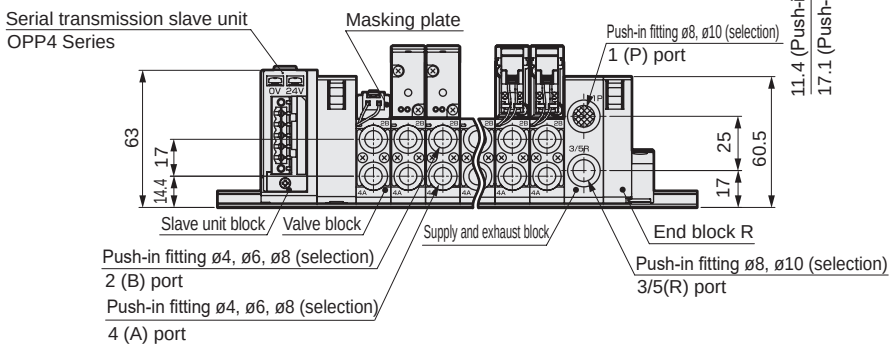

Dimensions

MN4GB1-P7*

Note: The two 3-port valve integrated have the same dimensions as the double.

● Thin serial transmission (T8□)

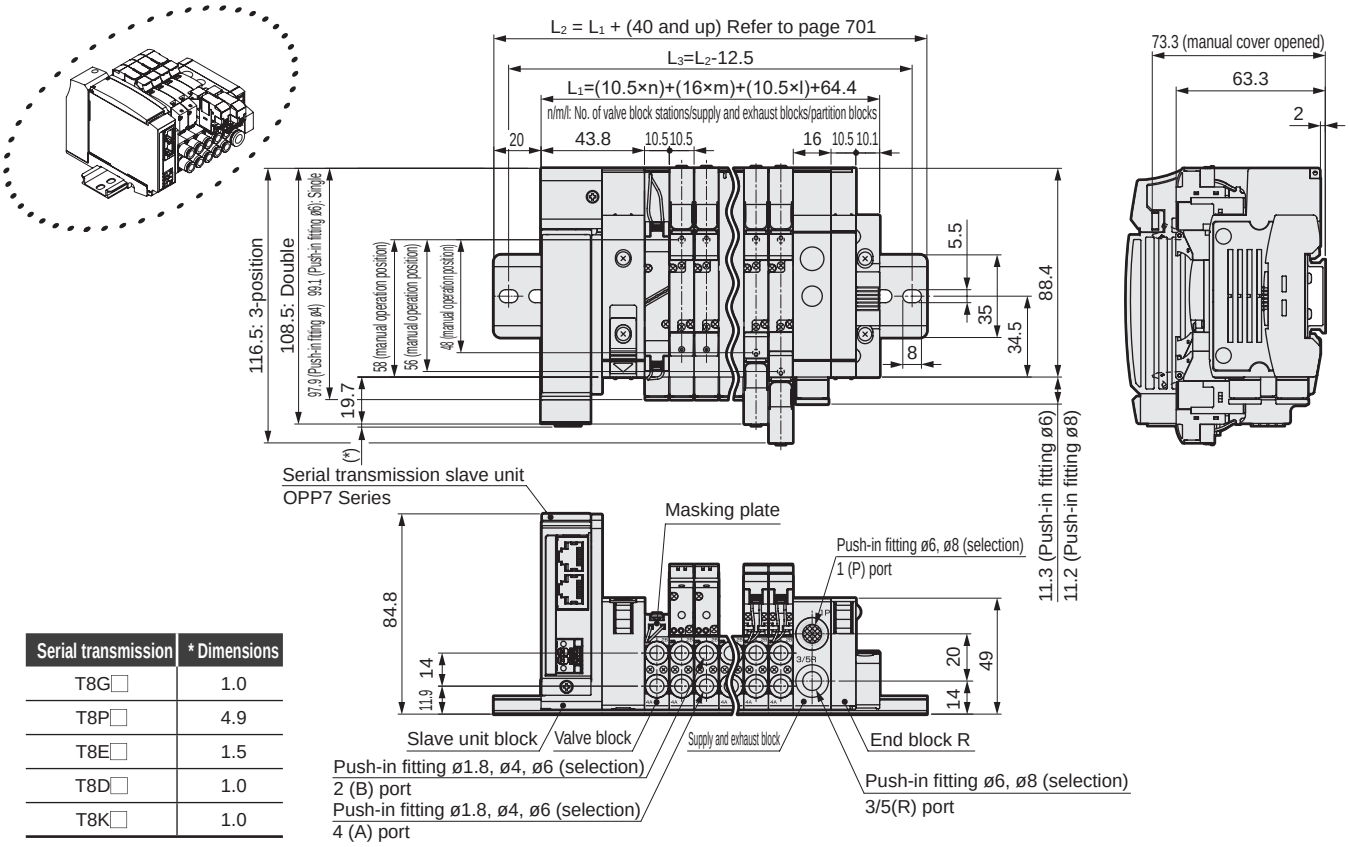

Serial transmission	* Dimensions
T8G□	1.0
T8P□	4.9
T8E□	1.5
T8D□	1.0
T8K□	1.0

MN4GB2-P7*

Note: Refer to pages 676 and 678 for dimensions of the radial push-in fitting.

● Thin serial transmission (T8□)

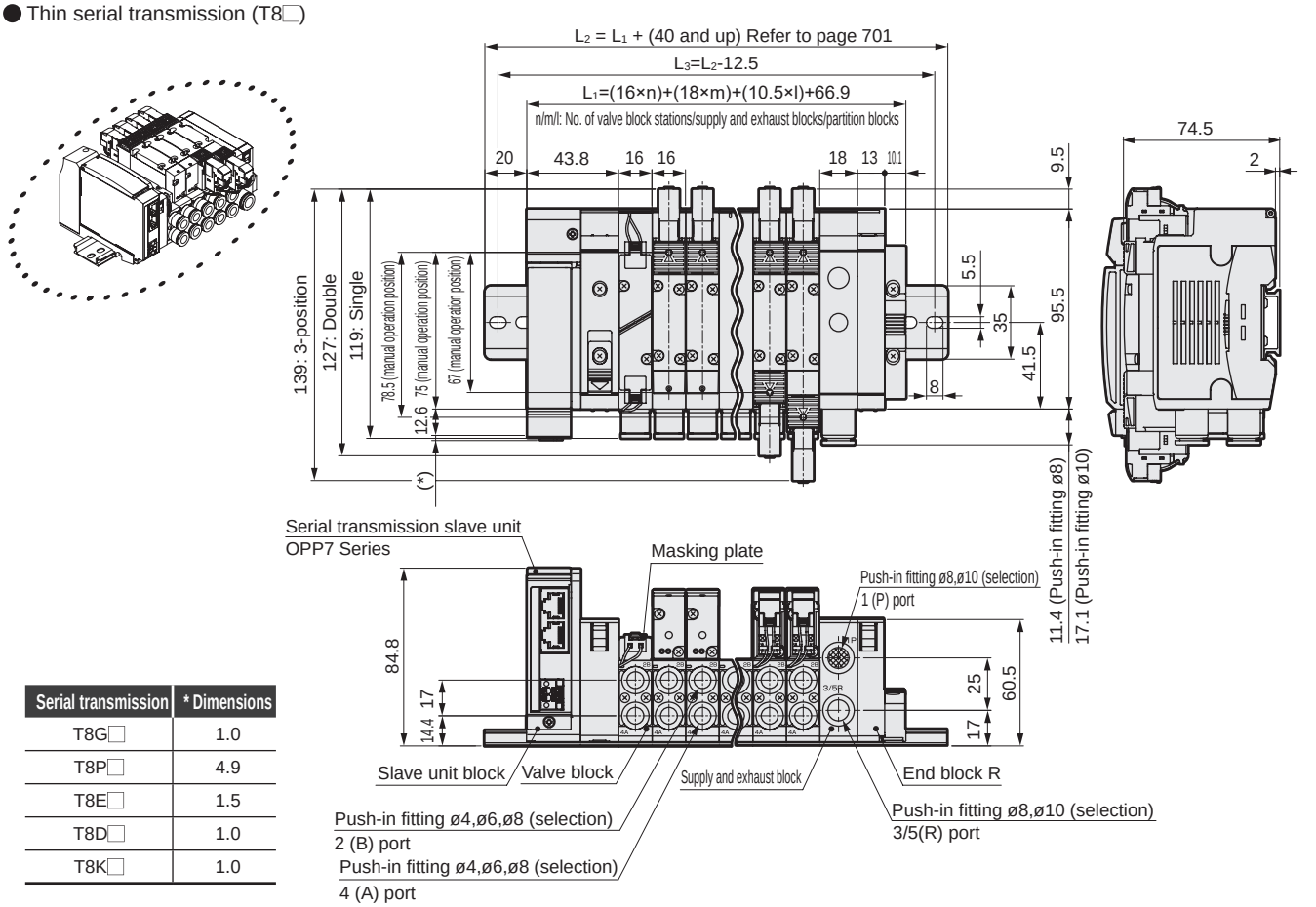

Serial transmission	* Dimensions
T8G□	1.0
T8P□	4.9
T8E□	1.5
T8D□	1.0
T8K□	1.0

Dimensions

MN4GB1 Valve block

● Fitting straight

● ø1.8(CF) ● ø1.8(C18) ● ø4(C4) ● ø6(C6)

● When option L (with pipe adaptor) is selected, add 25.9 mm.

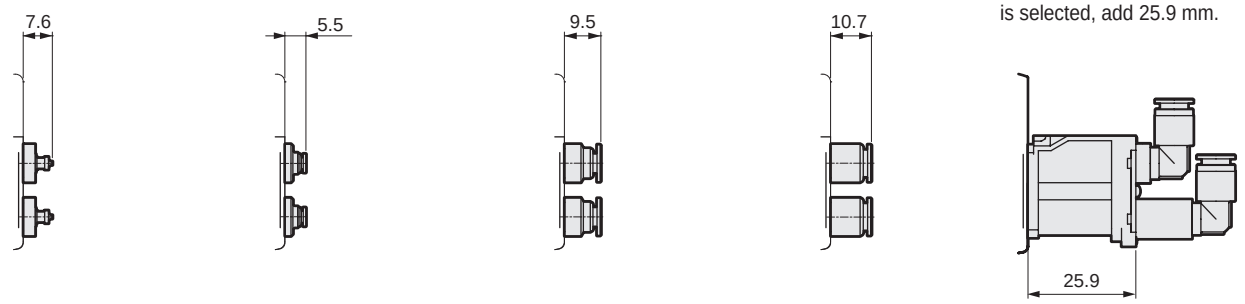

● Fitting straight, single plug

● ø1.8(CFNC) ● ø1.8(C18NC) ● ø4(C4NC) ● ø6(C6NC) ● ø1.8(CFNO) ● ø1.8(C18NO) ● ø4(C4NO) ● ø6(C6NO)

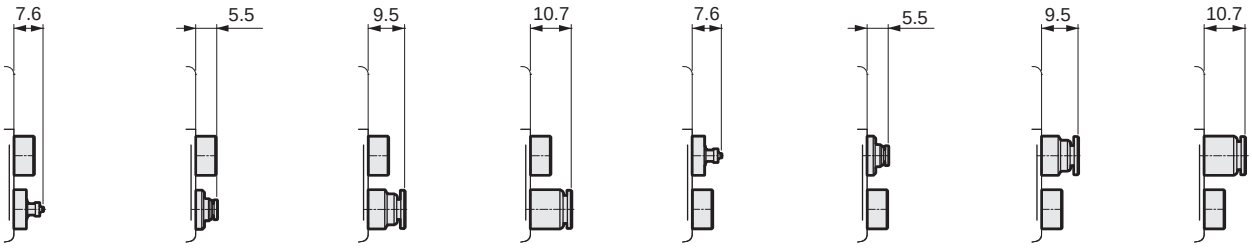

● L Fitting (upward)

● ø1.8(CL18) ● ø4(CL4) ● ø6(CL6)

● L Fitting (downward)

● ø1.8(CD18) ● ø4(CD4) ● ø6(CD6)

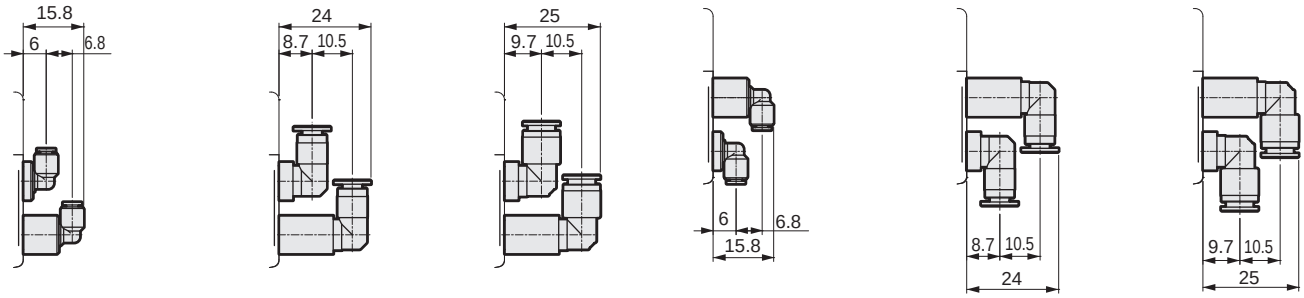

● L Fitting (upward), single plug

● ø1.8(CL18NC) ● ø4(CL4NC) ● ø6(CL6NC) ● ø1.8(CL18NO) ● ø4(CL4NO) ● ø6(CL6NO)

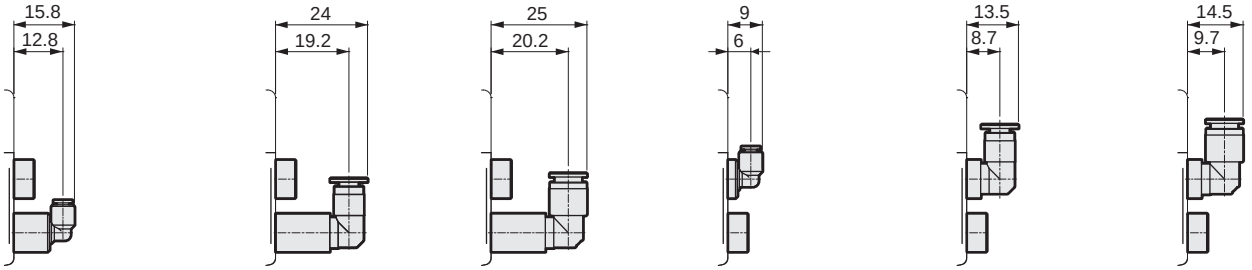

● L Fitting (downward), single plug

● ø1.8(CD18NC) ● ø4(CD4NC) ● ø6(CD6NC) ● ø1.8(CD18NO) ● ø4(CD4NO) ● ø6(CD6NO)

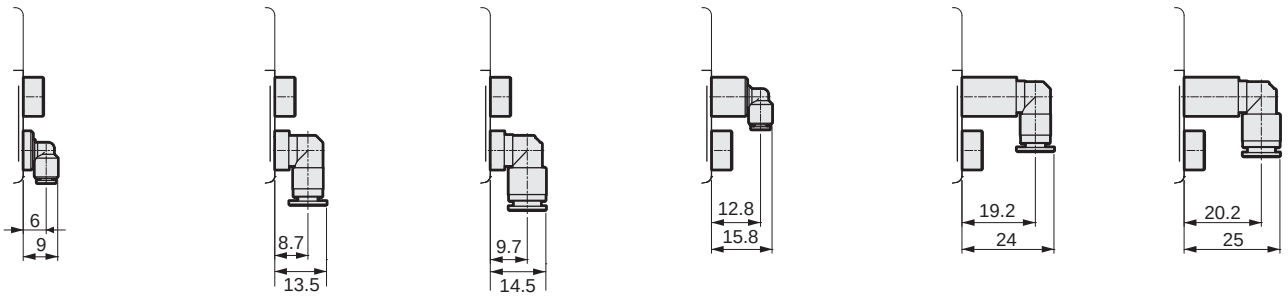

Dimensions

MN4GB1 Valve block

● Fitting straight

● ø1/8" (C3N)

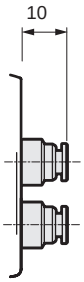

● ø5/32" (C4N)

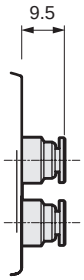

● When option L (with piping adapter) is selected, add 25.9 mm.

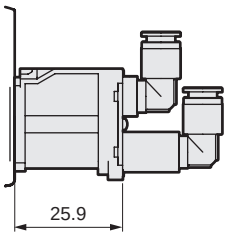

● Fitting straight, single plug

● ø1/8" (C3NCN)

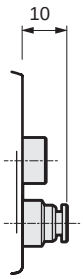

● ø5/32" (C4NCN)

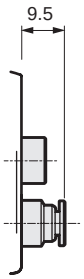

● ø1/8" (C3NON)

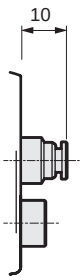

● ø5/32" (C4NON)

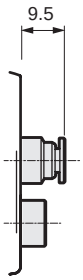

● Radial fitting (upward)

● ø1/8" (CL3N)

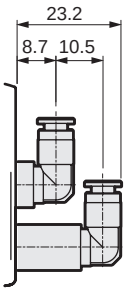

● ø5/32" (CL4N)

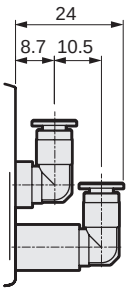

● ø1/8" (CD3N)

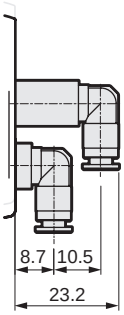

● ø5/32" (CD4N)

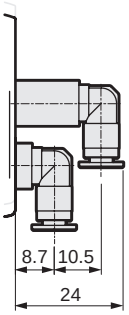

● L Fitting (upward), single plug

● ø1/8" (CL3NCN)

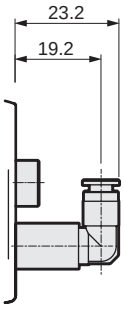

● ø5/32" (CL4NCN)

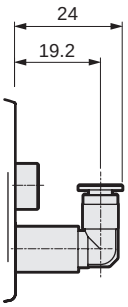

● ø1/8" (CL3NON)

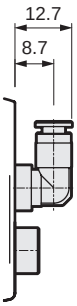

● ø5/32" (CL4NON)

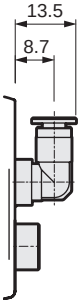

● L Fitting (downward), single plug

● ø1/8" (CD3NCN)

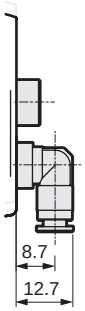

● ø5/32" (CD4NCN)

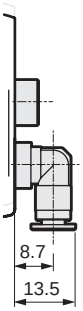

● ø1/8" (CD3NON)

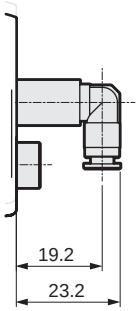

● ø5/32" (CD4NON)

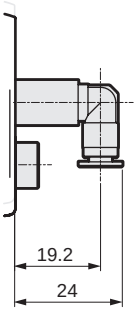

Dimensions

MN4GB2 Valve block

● Fitting straight

● ø4(C4)

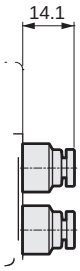

● ø6(C6)

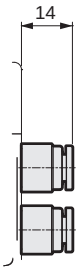

● ø8(C8)

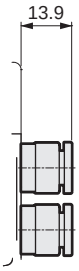

● When option L (with piping adapter) is selected, add 24.7 mm.

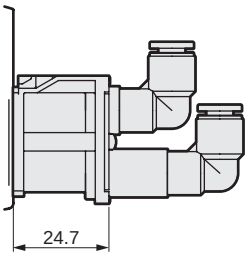

● Fitting straight, single plug

● ø4(C4NC)

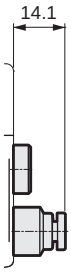

● ø6(C6NC)

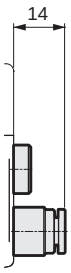

● ø8(C8NC)

● ø4(C4NO)

● ø6(C6NO)

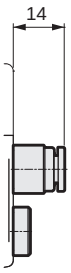

● ø8(C8NO)

● L Fitting (upward)

● ø6(CL6)

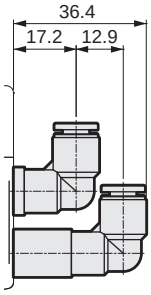

● ø8(CL8)

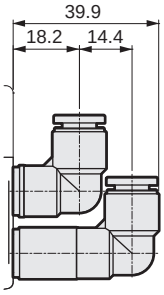

● L Fitting (downward)

● ø6(CD6)

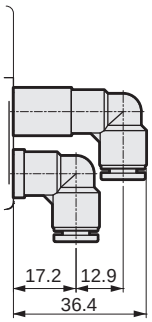

● ø8(CD8)

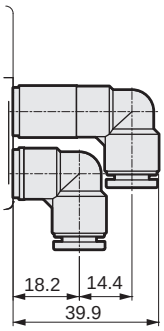

● L Fitting (upward), single plug

● ø6(CL6NC)

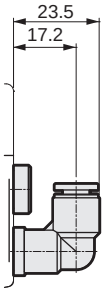

● ø8(CL8NC)

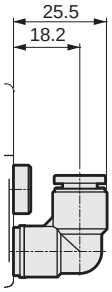

● ø6(CL6NO)

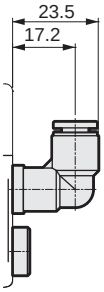

● ø8(CL8NO)

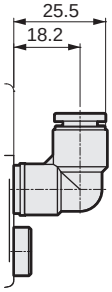

● L Fitting (downward), single plug

● ø6(CD6NC)

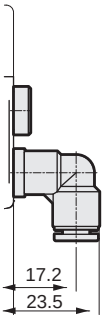

● ø8(CD8NC)

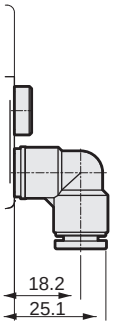

● ø6(CD6NO)

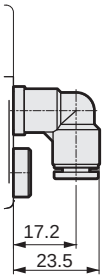

● ø8(CD8NO)

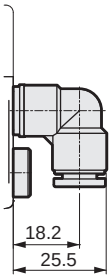

Dimensions

MN4GB2 Valve block

● Fitting straight

● ø1/4" (C6N)

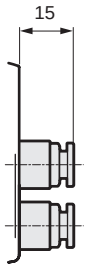

● ø5/16" (C8N)

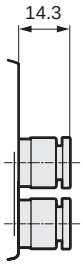

● When option L (with piping adapter) is selected, add 24.7 mm.

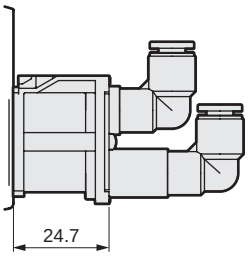

● Fitting straight, single plug

● ø1/4" (C6NNC)

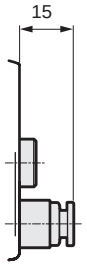

● ø5/16" (C8NNC)

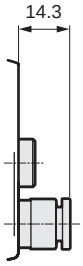

● ø1/4" (C6NON)

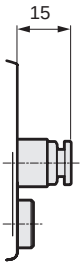

● ø5/16" (C8NON)

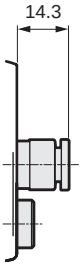

● L Fitting (upward)

● ø1/4" (CL6N)

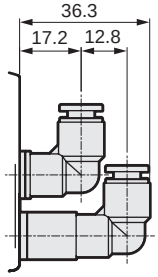

● ø5/16" (CL8N)

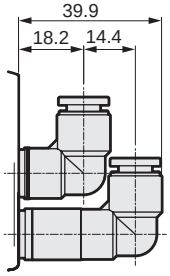

● L Fitting (downward)

● ø1/8" (CD6N)

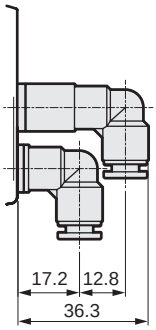

● ø5/32" (CD8N)

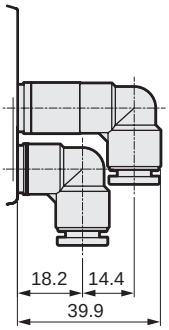

● L Fitting (upward), single plug

● ø1/4" (CL6NNC)

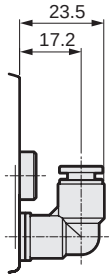

● ø5/16" (CL8NNC)

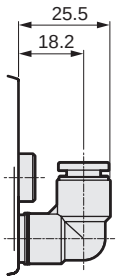

● ø1/4" (CL6NON)

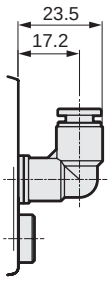

● ø5/16" (CL8NON)

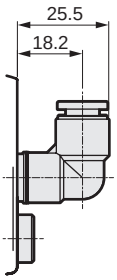

● L Fitting (downward), single plug

● ø1/4" (CD6NNC)

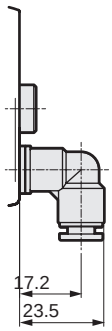

● ø5/16" (CD8NNC)

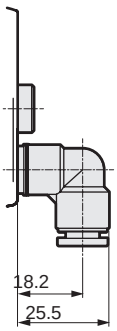

● ø1/4" (CD6NON)

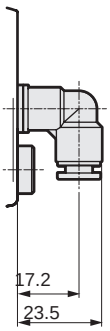

● ø5/16" (CD8NON)

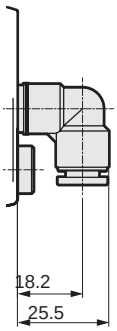

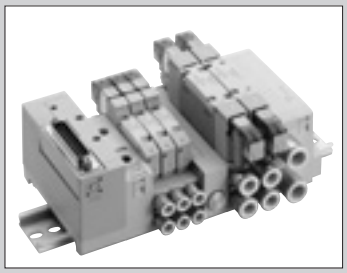

4G1/2 mixed manifold

MN3GAX12, MN4GAX12 MN4GBX12 Series

● Applicable cylinder bore size: ø20 to ø80

RoHS CAD

Specifications

The same as those of other series.

For individual wiring, refer to page 630 (direct piping) or page 638 (base piping), and for reduced wiring, refer to page 646 (direct piping) or page 662 (base piping).

How to order

MN3G$^{A}_{B}$X12R - ○ - ○ ○ ○ - ○ - ○ - ○

MN4G$^{A}_{B}$X12R - ○ - ○ ○ ○ - ○ - ○ - ○

Ⓐ Model No.
Ⓑ Port size
Ⓒ Electrical connections (reduced wiring)
Ⓓ Terminal and connector pin wiring
Ⓔ Option
Ⓕ Station No.
Ⓖ Voltage
Ⓗ Clean room specs

* The model No. will be "MN□G□X12R-". Other items are common with the example of model No. for each series.
For individual wiring, refer to page 632 (direct piping) or page 640 (base piping), and for reduced wiring, refer to page 648 (direct piping) or page 664 (base piping).

Manifold components explanation and parts list

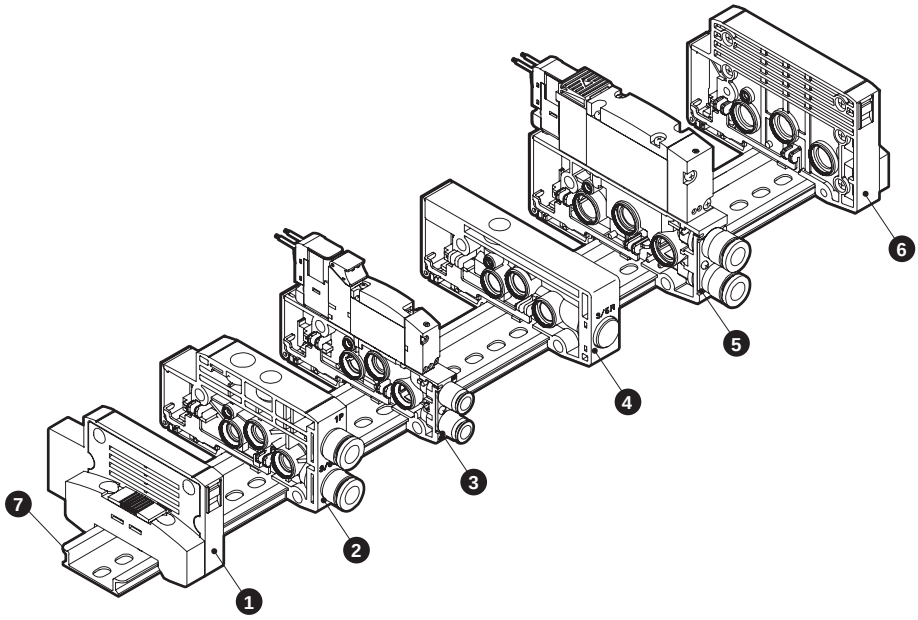

* Precautions regarding 4G1/2 mix manifolds
With the fitting towards the front, the left side of the mixed block will be the 4G1 Series while the right side will be the 4G2 Series. (Please be aware that it is not possible to configure these in the opposite positions.)

List of main components (refer to pages 682 to 698 for details)

No.	Component name	Model No. (example)
1	End block L	N4G1R-EL-P70
2	Supply and exhaust block	N4G1R-Q-8-P70/P74
3	Discrete valve block with solenoid valve	N4GB110R-C6-H-3-P70/P74
4	Mix block	N4G12R-MIX-P70/P74
5	Discrete valve block with solenoid valve	N4GB210R-C8-H-3-P70/P74
6	End block R	N4G2R-ER-P70/P74
7	DIN rail	N4GR-BAA (length)

Weight

N4G12R-MIX: 49 g
Refer to the specifications of each series for other components.

Mixed block: dimensions

Unit mm

MN4GBX12R-P7*

Note: For details regarding the E connector, EJ connector, and DIN terminal box, refer to the pages of each model (MN4GA: starting from page 635, MN4GB: starting from page 643).
Note: Refer to pages 676 to 679 for details of the radial push-in fitting.

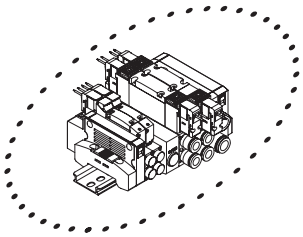

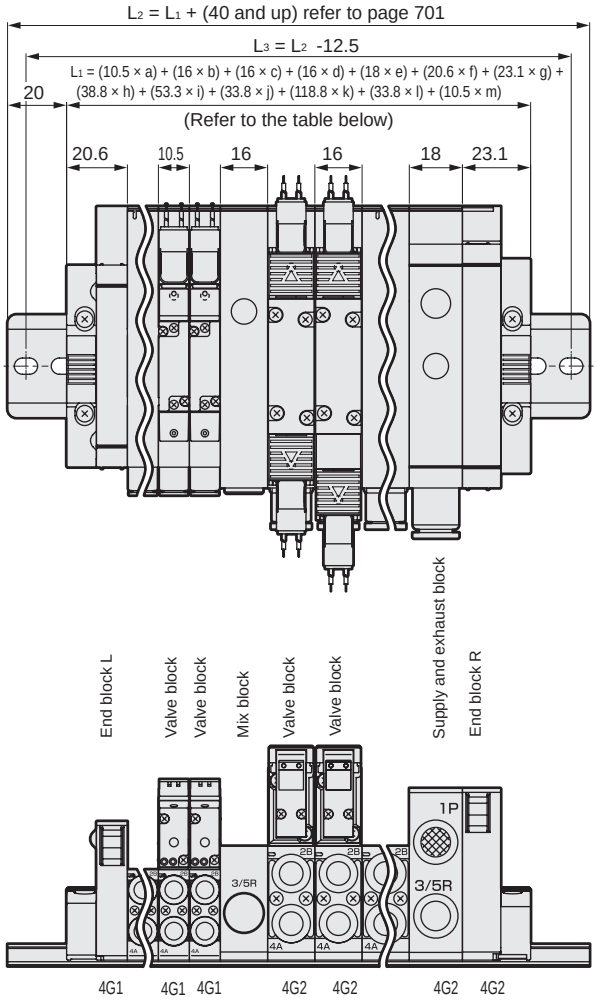

This diagram is merely an example of a mix manifold as combinations can be configured freely.
As the dimensions are as listed below, configure combinations while referring to the previous page.

Part name	Dimensions
a:4G1 Number of valve blocks	10.5 × a
b:4G2 Number of valve blocks	16 × b
c: Number of mix blocks	16 × c
d:4G1 Number of supply and exhaust blocks	16 × d
e:4G2 Number of supply and exhaust blocks	18 × e
f:4G1 Number of end block L	20.6 × f
g:4G2 Number of end block R	23.1× g
h:4G1/2 Number of T30/T5* reduced wiring	48.8 × h
i:4G1/2 Number of T10 reduced wiring	63.3 × i
j:4G1/2 Number of T7* reduced wiring	43.8 × j
k:4G1/2 Number of T6* reduced wiring	123 × K
l:4G1/2 Number of T8* reduced wiring	43.8 × l
m:4G1/2 Number of partition blocks	10.5 × m

Note 1: The mixed block will always be placed between 4G1 and 4G2.
Note 2: The max. station No. is 20.

SCPD3
SCM
SSD2
MDC2
SMG
LCM
LCR
LCG
LCX
STM
STG
STR2
MRL2
GRC
Cylinder switch
MN3E MN4E
4GA/B
M4GA/B
MN4GA/B
F.R (module unit)
Clean F.R
Precision R
Press gauge Diff. press gauge
Electro-pneumatic R
Speed controller
Auxiliary valve
Fitting/ tube
Clean air unit
Pressure sensor
Flow rate sensor
Valve for air blow
Ending

Block manifold; block configurations

Flexible assembly enables expansion of stations and maintenance.

● Valve block with solenoid valve

(1) The types of solenoid valve required can be arranged on a DIN rail at the number of stations required.
However, the max. number of stations depends on the wiring method. (Refer to pages 646 and 662.)

(2) Solenoid valves are numbered 1, 2, 3... from the left with the fitting in front.

● Supply and exhaust block

(1) At the connecting part of each block, a number of blocks can be freely connected.

(2) Select internal or external pilot according to the solenoid valve.

● End block

(1) Install on both sides for individual wiring specifications.

(2) Install only on wiring block opposite side for reduced wiring specifications.

● Partition block

(1) Install in combination with supply and exhaust blocks for multi-pressure specifications.

● Mixed block

(1) Install when combining 4G1 and 4G2 as a mix on the same DIN rail. This will have the effect of reduced piping.
Note : The mix block is narrow, with 4G1 on the left and 4G2 on the right.

Block manifold configuration

Piping section — Piping block

Ⓐ Discrete valve block with solenoid valve

- For direct piping individual wiring
- For direct piping reduced wiring
- For base piping individual wiring
- For base piping reduced wiring

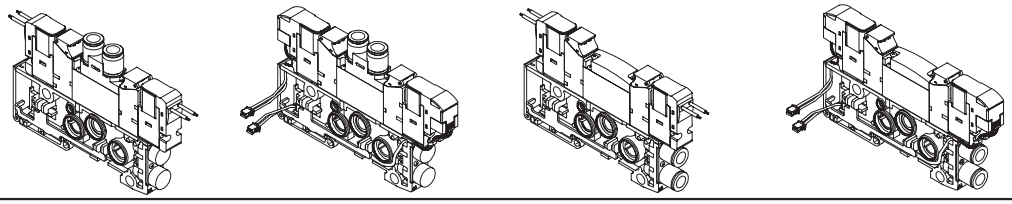

Ⓑ Discrete valve block with masking plate

- For direct piping
- For base piping

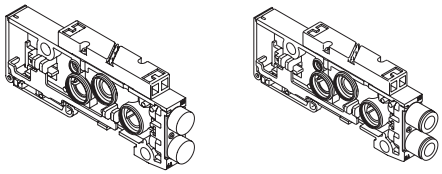

Ⓒ Discrete valve block

- For direct piping
- For base piping

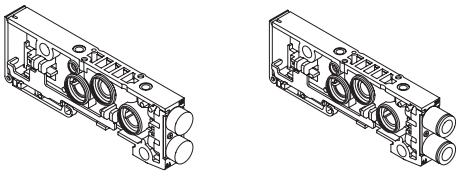

Ⓓ Supply and exhaust block

- Internal pilot
- External pilot

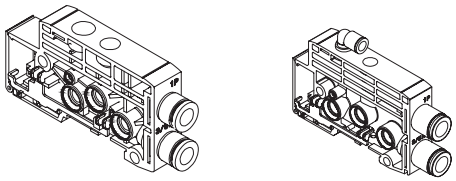

Ⓔ End block

- For left
- For right

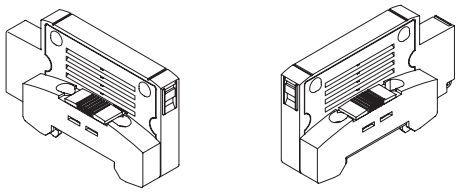

Ⓕ Partition block

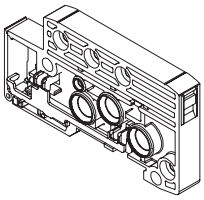

Ⓖ Mix block

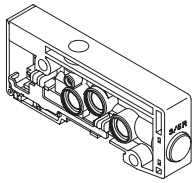

Wiring section — Wiring block

Ⓗ Common terminal block

- M3 thread
- Clamping

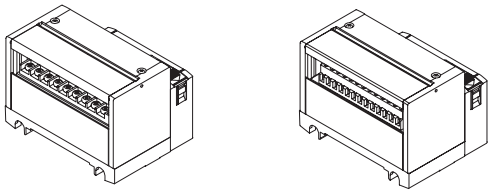

Ⓘ D sub-connector block

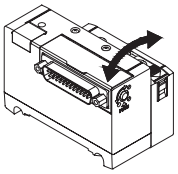

Ⓙ Flat cable connector block

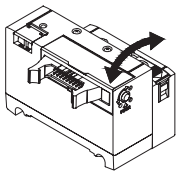

Ⓚ Serial transmission block

- Connector
- Thin slot

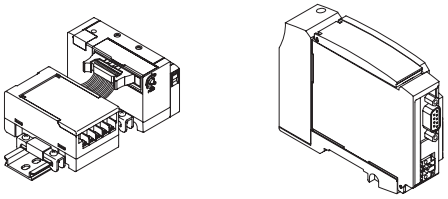

Related products — Related products

Ⓛ Related products

- Mounting rail

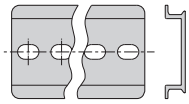

- Blanking plug

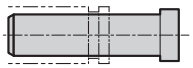

- Air supply spacer

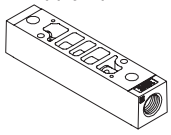

- Tag plate

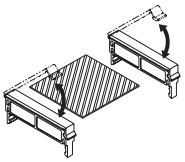

SCPD3
SCM
SSD2
MDC2
SMG
LCM
LCR
LCG
LCX
STM
STG
STR2
MRL2
GRC
Cylinder switch
MN3E MN4E
4GA/B
M4GA/B
MN4GA/B
F.R (module unit)
Clean F.R
Precision R
Press gauge Diff. press gauge
Electro-pneumatic R
Speed controller
Auxiliary valve
Fitting/ tube
Clean air unit
Pressure sensor
Flow rate sensor
Valve for air blow
Ending

Piping section

A. Discrete valve block with solenoid valve

A block formed as an assembly of the main unit of a solenoid valve and a valve block (split resin base). For selection guides, refer to the following pages. Direct piping individual wiring: page 632, base piping individual wiring: page 640, direct piping reduced wiring: pages 648, base piping reduced wiring: pages 664

B. Discrete valve block with masking plate

A block formed as an assembly of a masking plate and a valve block (split resin base).

N4GA1 R - MP — 3 — P70

N4GB1 R - MPD - C4 - 3 F — P70

Ⓐ Model No. Ⓑ Type Ⓒ Port size Ⓓ Cable length *2 Ⓔ Option Ⓕ Clean room specifications

Ⓑ Type

MP	For individual wiring
MPS	For reduced wiring single
MPD	For reduced wiring double/3-position

Ⓓ Cable length *3

Blank	For individual wiring
2 to 10	Select a length from page 686.

Ⓔ Option

Blank	No option
L	With piping adaptor
F	A/B port filter integrated

***2: When purchasing the product for the purpose of expanding stations of reduced wiring, a socket assembly will be attached, where "2-10" should be selected. Select a cable length from page 686 and fill it in the section of Ⓓ Cable length. However, it will not be necessary to include the cable length when making arrangements with the manifold specifications.**

Ⓕ Clean room specifications

	Structure	Material restriction
P70	Exhaust treatment	—
P74	Exhaust treatment	Copper-based/ silicon-based/ halogen-based materials (fluorine, chlorine, bromine) are prohibited

Code	Content		Ⓐ Model No. N4GA1	N4GA2	N4GB1	N4GB2
Ⓒ Port size (it is necessary to configure this with base piping)						
Type	Millimeter fitting/Rc thread					
CF	ø1.8 barbed fitting (applicable tube UP-9102-**)				●	
C18	ø1.8 push-in fitting (applicable tube UP-9402-**)				●	
C4	ø4 push-in fitting				●	●
C6	ø6 push-in fitting				●	●
C8	ø8 push-in fitting					●
CL18	ø1.8 radial facing-up push-in fitting (applicable tube UP-9402-**)				●	
CL4	ø4 radial facing-up push-in fitting				●	
CL6	ø6 radial facing-up push-in fitting				●	●
CL8	ø8 radial facing-up push-in fitting					●
CD18	ø1.8 radial facing-down push-in fitting (applicable tube UP-9402-**)				●	
CD4	ø4 radial facing-down push-in fitting				●	
CD6	ø6 radial facing-down push-in fitting				●	●
CD8	ø8 radial facing-down push-in fitting					●
Single side plugged specifications	A port	B port				
CFNC	ø1.8 barbed fitting (applicable tube UP-9102-**)	Plug			●	
C18NC	ø1.8 push-in fitting (applicable tube UP-9402-**)	Plug			●	
C4NC	ø4 push-in fitting	Plug			●	●
C6NC	ø6 push-in fitting	Plug			●	●
C8NC	ø8 push-in fitting	Plug				●
CFNO	Plug	ø1.8 barbed fitting (applicable tube UP-9102-**)			●	
C18NO	Plug	ø1.8 push-in fitting (applicable tube UP-9402-**)			●	
C4NO	Plug	ø4 push-in fitting			●	●
C6NO	Plug	ø6 push-in fitting			●	●
C8NO	Plug	ø8 push-in fitting				●
CL18NC	ø1.8 radial facing-up push-in fitting (applicable tube UP-9402-**)	Plug			●	
CL4NC	ø4 radial facing-up push-in fitting	Plug			●	●
CL6NC	ø6 radial facing-up push-in fitting	Plug			●	●
CL8NC	ø8 radial facing-up push-in fitting	Plug				●
CL18NO	Plug	ø1.8 radial facing-up push-in fitting (applicable tube UP-9402-**)			●	
CL4NO	Plug	ø4 radial facing-up push-in fitting			●	
CL6NO	Plug	ø6 radial facing-up push-in fitting			●	●
CL8NO	Plug	ø8 radial facing-up push-in fitting				●

Code	Content		Ⓐ Model No. N4GA1	N4GA2	N4GB1	N4GB2
Type	Millimeter fitting/Rc thread					
Single side plugged specifications	A port	B port				
CD18NC	ø1.8 radial facing-down push-in fitting (applicable tube UP-9402-**)	Plug			●	
CD4NC	ø4 radial facing-down push-in fitting	Plug			●	
CD6NC	ø6 radial facing-down push-in fitting	Plug			●	●
CD8NC	ø8 radial facing-down push-in fitting	Plug				●
CD18NO	Plug	ø1.8 radial facing-down push-in fitting (applicable tube UP-9402-**)			●	
CD4NO	Plug	ø4 radial facing-down push-in fitting			●	
CD6NO	Plug	ø6 radial facing-down push-in fitting			●	●
CD8NO	Plug	ø8 radial facing-down push-in fitting				●
Type	Inch fitting/inch thread					
C3N	ø1/8 inch push-in fitting				●	
C4N	ø5/32 inch push-in fitting				●	
C6N	ø1/4 inch push-in fitting					●
C8N	ø5/16 inch push-in fitting					●
CL3N	ø1/8 inch radial facing-up push-in fitting *1				○	
CL4N	ø5/32 inch radial facing-up push-in fitting *1				○	
CL6N	ø1/4 inch radial facing-up push-in fitting *1					○
CL8N	ø5/16 inch radial facing-up push-in fitting *1					○
Single side plugged specifications	A port	B port				
C3NCN	ø1/8 inch push-in fitting	Plug			●	
C4NCN	ø5/32 inch push-in fitting	Plug			●	
C6NCN	ø1/4 inch push-in fitting	Plug				●
C8NCN	ø5/16 inch push-in fitting	Plug				●
C3NON	Plug	ø1/8 inch push-in fitting			●	
C4NON	Plug	ø5/32 inch push-in fitting			●	
C6NON	Plug	ø1/4 inch push-in fitting				●
C8NON	Plug	ø5/16 inch push-in fitting				●
CL3NCN	Plug	ø1/8 inch radial facing-up push-in fitting *1			○	
CL4NCN	Plug	ø5/32 inch radial facing-up push-in fitting *1			○	
CL6NCN	Plug	ø1/4 inch radial facing-up push-in fitting *1				○
CL8NCN	Plug	ø5/16 inch radial facing-up push-in fitting *1				○
CL3NON	Plug	ø1/8 inch radial facing-up push-in fitting *1			○	
CL4NON	Plug	ø5/32 inch radial facing-up push-in fitting *1			○	
CL6NON	Plug	ø1/4 inch radial facing-up push-in fitting *1				○
CL8NON	Plug	ø5/16 inch radial facing-up push-in fitting *1				○

*1: This is a custom order product.

indicates specifications not available.

○ Custom order products. Contact CKD for details.

N4GA1R-MP

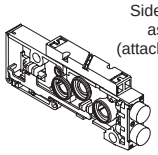

N4GB1R-MPD-C4-3

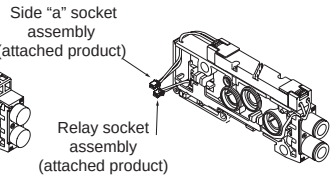

N4GB1R-MPD-C4-3L

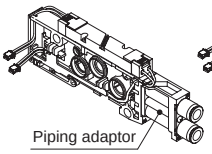

N4GB1R-MPD-CL4-3L

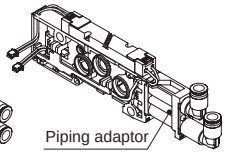

N4GA2R-MP

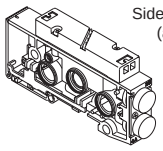

N4GB2R-MPD-C6-5

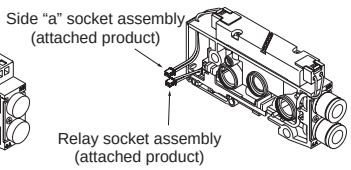

B-1. Masking plate

4G1R - MP-P70

Ⓐ Model No.

4G1R-MP

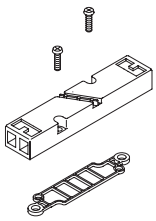

4G2R-MP

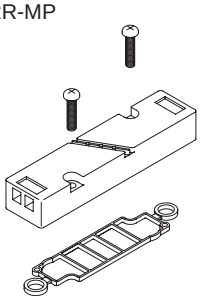

Piping section

C. Discrete valve block (discrete correspondence only)

A discrete valve block (split resin base).

N4GA1 R - V1 ——— 3 ——— P70

N4GB1 R - V2 - C4 - 3 F - P70

Ⓐ Model No. Ⓑ Type Ⓒ Port size Ⓓ Cable length *2 Ⓔ Option Ⓕ Clean room specifications

Ⓑ Type

V1	For individual wiring For reduced wiring single
V2	For reduced wiring double/3-position

Ⓓ Cable length *3

Blank	For individual wiring
2 to 10	Select a length from page 686.

***2: When purchasing the product for the purpose of expanding stations of reduced wiring, a socket assembly will be attached, where "2-10" should be selected.
Select a cable length from page 686 and fill it in the section of Ⓓ Cable length. However, it will not be necessary to include the cable length when making arrangements with the manifold specifications.**

Ⓕ Clean room specifications

	Structure	Material restriction
P70	Exhaust treatment	—
P74	Exhaust treatment	Copper-based/ silicon-based/ halogen-based materials (fluorine, chlorine, bromine) are prohibited

Code	Content		Ⓐ Model No. N4GA1	N4GA2	N4GB1	N4GB2
Ⓒ Port size (it is necessary to configure this with base piping)						
Type	Millimeter fitting/Rc thread					
CF	ø1.8 barbed fitting (applicable tube UP-9102-**)				●	
C18	ø1.8 push-in fitting (applicable tube UP-9402-**)				●	
C4	ø4 push-in fitting				●	●
C6	ø6 push-in fitting				●	●
C8	ø8 push-in fitting					●
CL18	ø1.8 radial facing-up push-in fitting (applicable tube UP-9402-**)				●	
CL4	ø4 radial facing-up push-in fitting				●	
CL6	ø6 radial facing-up push-in fitting				●	●
CL8	ø8 radial facing-up push-in fitting					●
CD18	ø1.8 radial facing-down push-in fitting (applicable tube UP-9402-**)				●	
CD4	ø4 radial facing-down push-in fitting				●	
CD6	ø6 radial facing-down push-in fitting				●	●
CD8	ø8 radial facing-down push-in fitting					●
Single side plugged specifications	A port	B port				
CFNC	ø1.8 barbed fitting (applicable tube UP-9102-**)	Plug			●	
C18NC	ø1.8 push-in fitting (applicable tube UP-9402-**)	Plug			●	
C4NC	ø4 push-in fitting	Plug			●	●
C6NC	ø6 push-in fitting	Plug			●	●
C8NC	ø8 push-in fitting	Plug				●
CFNO	Plug	ø1.8 barbed fitting (applicable tube UP-9102-**)			●	
C18NO	Plug	ø1.8 push-in fitting (applicable tube UP-9402-**)			●	
C4NO	Plug	ø4 push-in fitting			●	●
C6NO	Plug	ø6 push-in fitting			●	●
C8NO	Plug	ø8 push-in fitting				●
CL18NC	ø1.8 radial facing-up push-in fitting (applicable tube UP-9402-**)	Plug			●	
CL4NC	ø4 radial facing-up push-in fitting	Plug			●	●
CL6NC	ø6 radial facing-up push-in fitting	Plug			●	●
CL8NC	ø8 radial facing-up push-in fitting	Plug				●
CL18NO	Plug	ø1.8 radial facing-up push-in fitting (applicable tube UP-9402-**)			●	
CL4NO	Plug	ø4 radial facing-up push-in fitting			●	
CL6NO	Plug	ø6 radial facing-up push-in fitting			●	●
CL8NO	Plug	ø8 radial facing-up push-in fitting				●

Code	Content		Ⓐ Model No. N4GA1	N4GA2	N4GB1	N4GB2
Type	Millimeter fitting/Rc thread					
Single side plugged specifications	A port	B port				
CD18NC	ø1.8 radial facing-down push-in fitting (applicable tube UP-9402-**)	Plug			●	
CD4NC	ø4 radial facing-down push-in fitting	Plug			●	
CD6NC	ø6 radial facing-down push-in fitting	Plug			●	●
CD8NC	ø8 radial facing-down push-in fitting	Plug				●
CD18NO	Plug	ø1.8 radial facing-down push-in fitting (applicable tube UP-9402-**)			●	
CD4NO	Plug	ø4 radial facing-down push-in fitting			●	
CD6NO	Plug	ø6 radial facing-down push-in fitting			●	●
CD8NO	Plug	ø8 radial facing-down push-in fitting				●
Type	Inch fitting/inch thread					
C3N	ø1/8 inch push-in fitting				●	
C4N	ø5/32 inch push-in fitting				●	
C6N	ø1/4 inch push-in fitting					●
C8N	ø5/16 inch push-in fitting					●
CL3N	ø1/8 inch radial facing-up push-in fitting *1				○	
CL4N	ø5/32 inch radial facing-up push-in fitting *1				○	
CL6N	ø1/4 inch radial facing-up push-in fitting *1					○
CL8N	ø5/16 inch radial facing-up push-in fitting *1					○
Single side plugged specifications	A port	B port				
C3NCN	ø1/8 inch push-in fitting	Plug			●	
C4NCN	ø5/32 inch push-in fitting	Plug			●	
C6NCN	ø1/4 inch push-in fitting	Plug				●
C8NCN	ø5/16 inch push-in fitting	Plug				●
C3NON	Plug	ø1/8 inch push-in fitting			●	
C4NON	Plug	ø5/32 inch push-in fitting			●	
C6NON	Plug	ø1/4 inch push-in fitting				●
C8NON	Plug	ø5/16 inch push-in fitting				●
CL3NCN	ø1/8 inch radial facing-up push-in fitting *1	Plug			○	
CL4NCN	ø5/32 inch radial facing-up push-in fitting *1	Plug			○	
CL6NCN	ø1/4 inch radial facing-up push-in fitting *1	Plug				○
CL8NCN	ø5/16 inch radial facing-up push-in fitting *1	Plug				○
CL3NON	Plug	ø1/8 inch radial facing-up push-in fitting *1			○	
CL4NON	Plug	ø5/32 inch radial facing-up push-in fitting *1			○	
CL6NON	Plug	ø1/4 inch radial facing-up push-in fitting *1				○
CL8NON	Plug	ø5/16 inch radial facing-up push-in fitting *1				○

Ⓔ Option

Blank	No option	●	●	●	●
L	With piping adapter			●	●
F	Port A/B filter built in			●	●
Z6	For spacer pilot check valve mounting				●

*1: This is a custom order product.

indicates specifications not available.

○ Custom order products. Contact CKD for details.

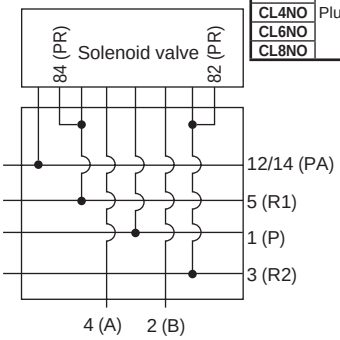

Discrete valve lock circuit diagram

N4GA1R-V1

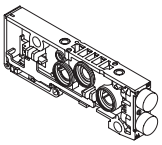

N4GB1R-V2-C4

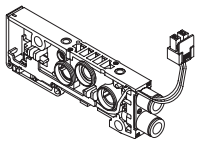

N4GA2R-V1

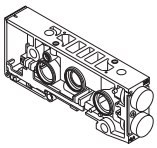

N4GB2R-V2-C6

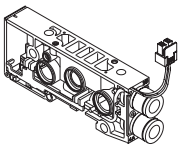

Option L with piping adaptor attached

Select L (with piping adaptor) when using the radia facing-up push-in fitting at Double, 3 position.
Combination of the straight push-in fitting and the piping adaptor makes the fitting jut out further than the socket assembly and, as a result, the workability of connecting/ disconnecting tube is improved.

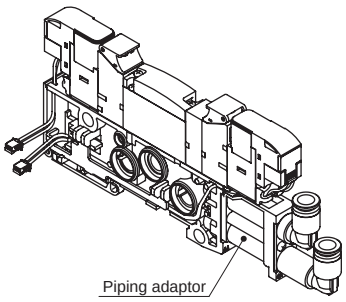

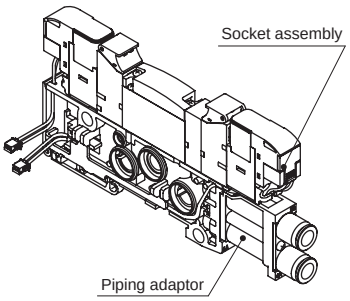

SCPD3
SCM
SSD2
MDC2
SMG
LCM
LCR
LCG
LCX
STM
STG
STR2
MRL2
GRC
Cylinder switch
MN3E MN4E
4GA/B
M4GA/B
MN4GA/B
F.R (module unit)
Clean F.R
Precision R
Press gauge Diff. press gauge
Electro-pneumatic R
Speed controller
Auxiliary valve
Fitting/ tube
Clean air unit
Pressure sensor
Flow rate sensor
Valve for air blow
Ending

Piping section

As problems may occur depending on the configuration, make selections with a sufficient understanding of the features of each block.

C. Discrete valve block (discrete correspondence only)

Valve block for expansion, cable length

Calculate the distance W between the expansion position and the electrical block (Fig. 1), and select a cable of an appropriate length from [Table 1].
Please be aware that the required socket assembly will differ between the a side solenoid and the b side solenoid.
Although Fig. 1 shows specifications where the electrical block is on the left side, similarly calculate the distance W between the expansion position and the electrical block with right side specifications as well.

Calculation of W

- MN4G1
  W = (10.5 × n) + (16 × m) + (10.5 × l)
- MN4G2
  W = (16 × n) + (18 × m) + (10.5 × l)
  n: number of valve blocks m: number of supply and exhaust blocks l: number of partition blocks
- MN4GX
  Calculate W using the mix block width of 16.

[Table 1] W length - selection No. compatibility table

Selection No.	Type of wiring		
	T10/11 (R)	T30/5*/6* (R)	T7*/T8*
2		0	25 or less
3	20 or less	Over 0 to 30	Over 25 to 55
4	Over 20 to 70	Over 30 to 80	Over 55 to 105
5	Over 70 to 120	Over 80 to 130	Over 105 to 155
6	Over 120 to 170	Over 130 to 180	Over 155 to 205
7	Over 170 to 260	Over 180 to 270	Over 205 to 295
8	Over 260 to 350	Over 270 to 360	Over 295 to 385
9	Over 350 to 450	Over 360 to 460	Over 385 to 485
10	Over 450 to 570	Over 460 to 580	Over 485 to 605

Fig. 1

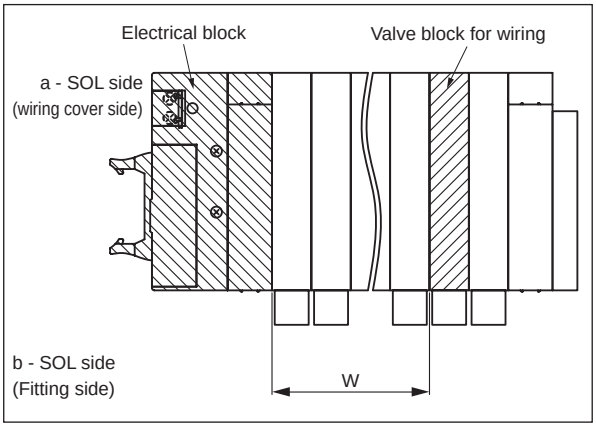

D. Supply and exhaust block

The supply and exhaust block can be installed at any position adjacent to the valve block.
As there is no set number of units, install two or more units when necessary for combinations with partition blocks or when wanting to increase the flow rate for supply and exhaust. In order to prevent foreign objects from flowing in, the P port is equipped with a filter.

N4G1R - Q - 8 - P70
Model No. Ⓐ Type Ⓑ Port size Ⓒ Clean room specifications

Ⓐ Type	
Q	Internal pilot
QK	External pilot

*1: This is a custom order product.
*2: When using a silencer for the inch fitting specifications, select 6*M and 8*M.
*3: For X end block, select atmosphere release (EX).

Ⓑ Port size	
6	ø6 push-in fitting
6L	ø6 push-in fitting Upward
6D	ø6 push-in fitting Downward
8	ø8 push-in fitting
8L	ø8 push-in fitting Upward
8D	ø8 push-in fitting Downward
6N	ø1/4 inch push-in fitting
6LN	ø1/4 inch push-in fitting Upward *1
6DN	ø1/4 inch push-in fitting Downward *1
8N	ø5/16 inch push-in fitting
8LN	ø5/16 inch push-in fitting Upward *1
8DN	ø5/16 inch push-in fiting Downward *1

6M *2	P port ø1/4 inch push-in fitting R port ø6 push-in fitting
6LM *1 *2	P port ø1/4 inch push-in fitting Upward R port ø6 push-in fitting Upward
6DM *1 *2	P port ø1/4 inch push-in fitting Downward R port ø6 push-in fitting Downward
8M *2	P port ø5/16 inch push-in fitting R port ø8 push-in fitting *2
8LM *1 *2	P port ø5/16 inch push-in fitting Upward R port ø8 push-in fitting Upward
8DM *1 *2	P port ø5/16 inch push-in fitting Downward R port ø8 push-in fitting Downward

Ⓒ Clean room specifications
P70
P74

N4G2R - QK - 10L - P70
Model No. Ⓐ Type Ⓑ Port size Ⓒ Clean room specifications

Ⓐ Type	
Q	Internal pilot
QK	External pilot

*1: This is a custom order product.
*2: When using a silencer for the inch fitting specifications, select 6*M and 8*M.
*3: For X end block, select atmosphere release (EX).

Ⓑ Port size	
8	ø8 push-in fitting
8L	ø8 push-in fitting Upward
8D	ø8 push-in fitting Downward
10	ø10 push-in fitting
10L	ø10 push-in fitting Upward
10D	ø10 push-in fitting Downward
8N	ø5/16 inch push-in fitting
8LN	ø5/16 inch push-in fitting Upward *1
8DN	ø5/16 inch push-in fitting Downward *1
10N	ø3/8 inch push-in fitting
10LN	ø3/8 inch push-in fitting Upward *1
10DN	ø3/8 inch push-in fitting Downward *1

8M *2	P port ø5/16 inch push-in fitting R port ø8 push-in fitting
8ML *1 *2	P port ø5/16 inch push-in fitting Upward R port ø8 push-in fitting Upward
8DM *1 *2	P port ø5/16 inch push-in fitting Downward R port ø8 push-in fitting Downward
10M *2	P port ø3/8 inch push-in fitting R port ø10 push-in fitting
10LM *1 *2	P port ø3/8 inch push-in fitting Upward R port ø10 push-in fitting Upward
10DM *1 *2	P port ø3/8 inch push-in fitting Downward R port ø10 push-in fitting Downward

Ⓒ Clean room specifications
P70
P74

N4G1R-Q-8

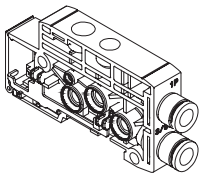

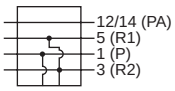

P (supply port)
R (exhaust port)

N4G2R-Q-10L

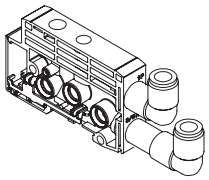

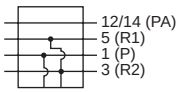

P (supply port)
R (exhaust port)

N4G1R-QK-8

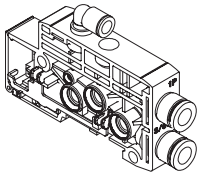

PA (external pilot Port)

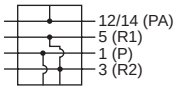

P (supply port)
R (exhaust port)

* External pilot port: ø6 push-in fitting

N4G2R-QK-10

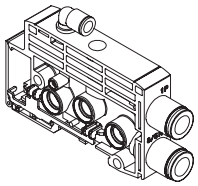

PA (external pilot Port)

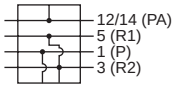

P (supply port)
R (exhaust port)

* External pilot port: ø6 push-in fitting

Piping section

E. End block

Install the units on both ends of the manifold with individual wiring. Install the units on opposite sides of the electrical block with reduced wiring.

N4G1 R - E - R - P70

Model No. | Common exhaust | Ⓐ Mounting position | Ⓑ Clean room specifications

Ⓐ Mounting position		Ⓑ Clean room specifications
L	For left side	P70
R	For right side	P74

N4G1R-EL

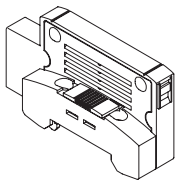

N4G1R-ER

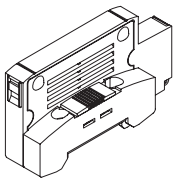

N4G2 R - E - L - P70

Model No. | Common exhaust | Ⓐ Mounting position | Ⓑ Clean room specifications

Ⓐ Mounting position		Ⓑ Clean room specifications
L	For left side	P70
R	For right side	

N4G2R-EL

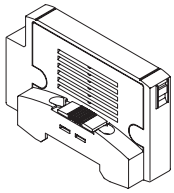

N4G2R-ER

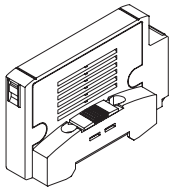

F. Partition block

It is possible to implement measures to prevent mixture of different pressures and increase of back pressure by using the combination of a partition block and a supply and exhaust block.

N4G1 R - S - P70

Model No. | Ⓐ Type | Ⓑ Clean room specifications

Ⓐ Type		Ⓑ Clean room specifications
SA	P/R/PA stop	P70
S	P/R stop PA through	P74
SP	P stop R/PA through	
SE	R stop P/PA through	

N4G1-S

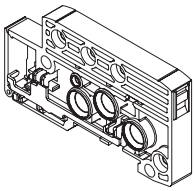

N4G2 R - SA - P70

Model No. | Ⓐ Type | Ⓑ Clean room specifications

Ⓐ Type		Ⓑ Clean room specifications
SA	P/R/PA stop	P70
S	P/R stop PA through	P74
SP	P stop R/PA through	
SE	R stop P/PA through	

N4G2-S

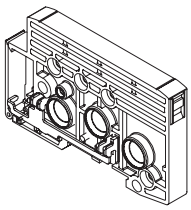

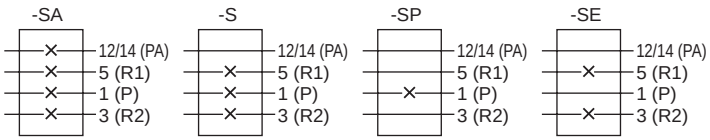

G. Mixed block

Installed in cases when 4G1 and 4G2 will coexist in the same manifold.
The mounting positions will be 4G1 on the left side of the mixed block and 4G2 on the right side.

N4G12 R - MIX - P70

Clean room specifications
P70
P74

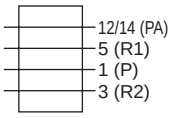

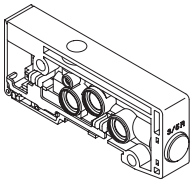

Block manifold: Wiring section

Wiring section Wiring block cannot be ordered as a separate item.
* Wiring blocks are: H. Common terminal box, I.D. sub-connector block, J. Flat cable connector block, K. Generic term for serial transmission blocks.

H. Common terminal block

M3 thread

N4G1R-T10

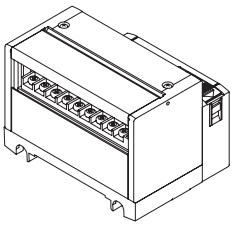

N4G1R-T10R

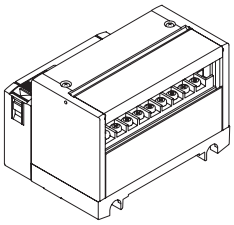

M3 thread

N4G2R-T10

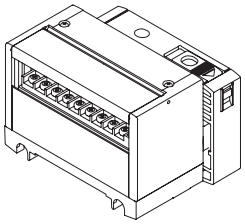

N4G2R-T10R

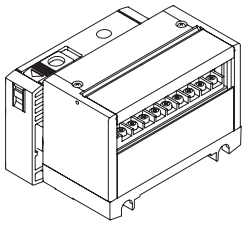

Clamping

N4G1R-T11

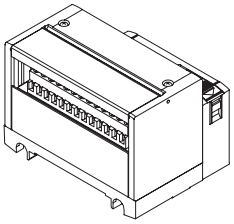

N4G1R-T11R

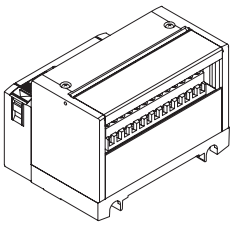

Clamping

N4G2R-T11

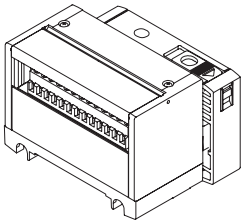

N4G2R-T11R

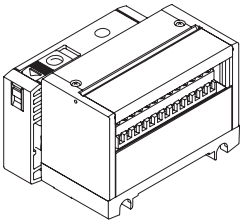

I. D sub-connector block

N4G1R-T30

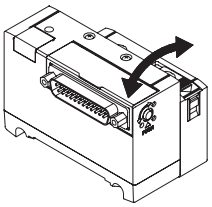

N4G1R-T30R

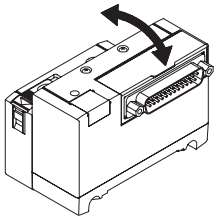

N4G2R-T30

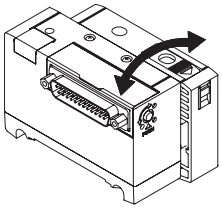

N4G2R-T30R

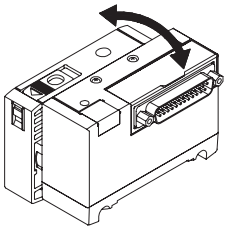

* Refer to page 717 for the model No. of cables with a D sub-connector cable.

J. Flat cable connector block

● With power supply terminal

N4G1R-T50

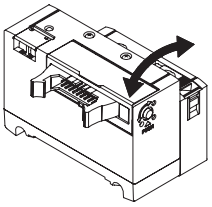

N4G1R-T50R

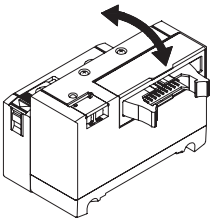

● With power supply terminal

N4G2R-T50

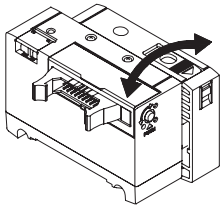

N4G2R-T50R

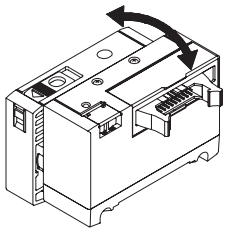

● Without power supply terminal

N4G1R-T51(N4G1R-T52)
(N4G1R-T53)

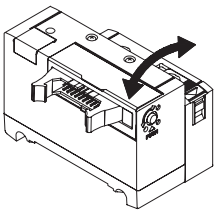

N4G1R-T51R(N4G1R-T52R)
(N4G1R-T53R)

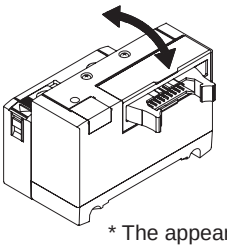

● Without power supply terminal

N4G2R-T51(N4G2R-T52)
(N4G2R-T53)

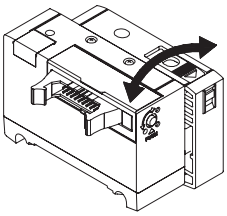

N4G2R-T51R(N4G2R-T52R)
(N4G2R-T53R)

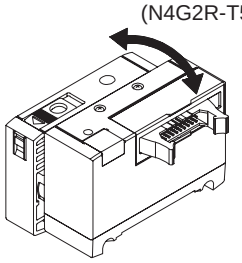

* The appearance of the connector unit varies with T52 and T53.

Wiring section (Electrical block) *Orders cannot be placed for only an electrical block.

K. Serial transmission block

● Connector

N4G1R - T6G1

Model No. — Ⓐ Type

Ⓐ Type			
T6G1	CC-Link	NPN	16 points

N4G1R-T6*

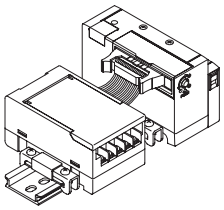

N4G2R- T6G1

Model No. — Ⓐ Type

Ⓐ Type			
T6G1	CC-Link	NPN	16 points

N4G2R-T6*

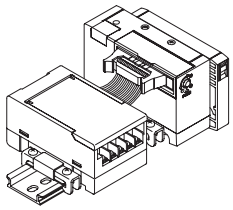

● Thin slot

N4G1R - T7D1

Model No. — Ⓐ Type

Ⓐ Type			
T7D1	DeviceNet	NPN	16 points
T7G1	CC-Link	NPN	16 points
T7L1	SAVE NET	NPN	16 points
T7S1	CompoNet	NPN	16 points
T7SP1	CompoNet	PNP	16 points

N4G1R-T7*

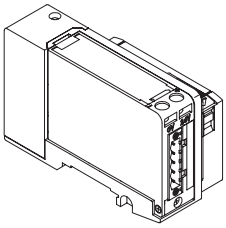

N4G2R- T7G1

Model No. — Ⓐ Type

Ⓐ Type			
T7D1	DeviceNet	NPN	16 points
T7G1	CC-Link	NPN	16 points
T7L1	SAVE NET	NPN	16 points
T7S1	CompoNet	NPN	16 points
T7SP1	CompoNet	PNP	16 points

N4G2R-T7*

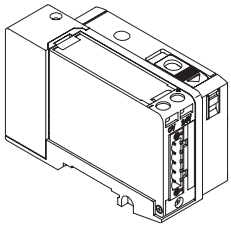

● Thin slot type

N4G1R - T8G1

Ⓐ Wiring method

Ⓐ Wiring method			
T8G1	CC-Link	NPN	16 points
T8G2	CC-Link	NPN	32 points
T8GP1	CC-Link	PNP	16 points
T8GP2	CC-Link	PNP	32 points
T8P1	PROFIBUS-DP	NPN	16 points
T8P2	PROFIBUS-DP	NPN	32 points
T8PP1	PROFIBUS-DP	PNP	16 points
T8PP2	PROFIBUS-DP	PNP	32 points
T8EC1	EtherCAT	NPN	16 points
T8EC2	EtherCAT	NPN	32 points
T8ECP1	EtherCAT	PNP	16 points
T8ECP2	EtherCAT	PNP	32 points
T8EN1	EtherNet/IP	NPN	16 points
T8EN2	EtherNet/IP	NPN	32 points
T8ENP1	EtherNet/IP	PNP	16 points
T8ENP2	EtherNet/IP	PNP	32 points
T8D1	DeviceNet	NPN	16 points
T8D2	DeviceNet	NPN	32 points
T8DP1	DeviceNet	PNP	16 points
T8DP2	DeviceNet	PNP	32 points
T8EB1	CC-Link IEF Basic	NPN	16 points
T8EB2	CC-Link IEF Basic	NPN	32 points
T8EBP1	CC-Link IEF Basic	PNP	16 points
T8EBP2	CC-Link IEF Basic	PNP	32 points
T8EF1	CC-Link IE Field	NPN	16 points
T8EF2	CC-Link IE Field	NPN	32 points
T8EFP1	CC-Link IE Field	PNP	16 points
T8EFP2	CC-Link IE Field	PNP	32 points
T8EP1	PROFINET	NPN	16 points
T8EP2	PROFINET	NPN	32 points
T8EPP1	PROFINET	PNP	16 points
T8EPP2	PROFINET	PNP	32 points
T8KC1	IO-Link	NPN	16 points
T8KC2	IO-Link	NPN	32 points
T8KCP1	IO-Link	PNP	16 points
T8KCP2	IO-Link	PNP	32 points

N4G1R-T8*

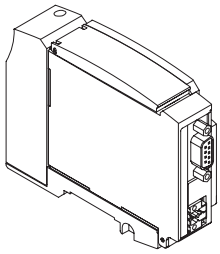

N4G2R- T8G1

Ⓐ Wiring method

Ⓐ Wiring method			
T8G1	CC-Link	NPN	16 points
T8G2	CC-Link	NPN	32 points
T8GP1	CC-Link	PNP	16 points
T8GP2	CC-Link	PNP	32 points
T8P1	PROFIBUS-DP	NPN	16 points
T8P2	PROFIBUS-DP	NPN	32 points
T8PP1	PROFIBUS-DP	PNP	16 points
T8PP2	PROFIBUS-DP	PNP	32 points
T8EC1	EtherCAT	NPN	16 points
T8EC2	EtherCAT	NPN	32 points
T8ECP1	EtherCAT	PNP	16 points
T8ECP2	EtherCAT	PNP	32 points
T8EN1	EtherNet/IP	NPN	16 points
T8EN2	EtherNet/IP	NPN	32 points
T8ENP1	EtherNet/IP	PNP	16 points
T8ENP2	EtherNet/IP	PNP	32 points
T8D1	DeviceNet	NPN	16 points
T8D2	DeviceNet	NPN	32 points
T8DP1	DeviceNet	PNP	16 points
T8DP2	DeviceNet	PNP	32 points
T8EB1	CC-Link IEF Basic	NPN	16 points
T8EB2	CC-Link IEF Basic	NPN	32 points
T8EBP1	CC-Link IEF Basic	PNP	16 points
T8EBP2	CC-Link IEF Basic	PNP	32 points
T8EF1	CC-Link IE Field	NPN	16 points
T8EF2	CC-Link IE Field	NPN	32 points
T8EFP1	CC-Link IE Field	PNP	16 points
T8EFP2	CC-Link IE Field	PNP	32 points
T8EP1	PROFINET	NPN	16 points
T8EP2	PROFINET	NPN	32 points
T8EPP1	PROFINET	PNP	16 points
T8EPP2	PROFINET	PNP	32 points
T8KC1	IO-Link	NPN	16 points
T8KC2	IO-Link	NPN	32 points
T8KCP1	IO-Link	PNP	16 points
T8KCP2	IO-Link	PNP	32 points

N4G2R-T8*

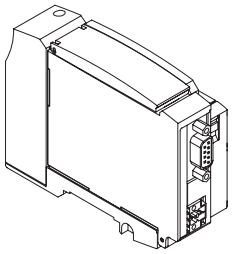

SCPD3
SCM
SSD2
MDC2
SMG
LCM
LCR
LCG
LCX
STM
STG
STR2
MRL2
GRC
Cylinder switch
MN3E MN4E
4GA/B
M4GA/B
MN4GA/B
F.R (module unit)
Clean F.R
Precision R
Press gauge Diff. press gauge
Electro-pneumatic R
Speed controller
Auxiliary valve
Fitting/ tube
Clean air unit
Pressure sensor
Flow rate sensor
Valve for air blow
Ending

L. Serial transmission slave unit

* The serial transmission slave unit may be ordered as a separate item.

● Discrete serial transmission slave unit (connector type)

4GR - OPP3 - 1G

Ⓐ Wiring method

Code	Content			
Ⓐ Wiring method				
1G	T6G1	CC-Link	NPN	16 points

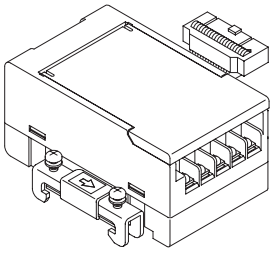

● Discrete serial transmission slave unit (thin slot type)

4GR - OPP4 - 1D

Ⓐ Wiring method

Code	Content			
Ⓐ Wiring method				
1D	T7D1	DeviceNet	NPN	16 points
1G	T7G1	CC-Link	NPN	16 points
1L	T7L1	SAVE NET	NPN	16 points
1S	T7S1	CompoNet	NPN	16 points
1S-P	T7SP1		PNP	16 points

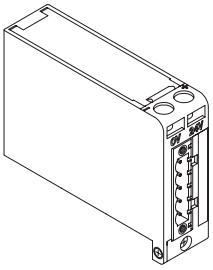

● Serial transmission slave unit single component (thin slot)

4GR - OPP7 - 2G

Ⓐ Wiring method

Code	Description			
Ⓐ Wiring method				
1G	T8G1	CC-Link	NPN	16 points
2G	T8G2			32 points
1G-P	T8GP1		PNP	16 points
2G-P	T8GP2			32 points
1P	T8P1	PROFIBUS-DP	NPN	16 points
2P	T8P2			32 points
1P-P	T8PP1		PNP	16 points
2P-P	T8PP2			32 points
1EC	T8EC1	EtherCAT	NPN	16 points
2EC	T8EC2			32 points
1EC-P	T8ECP1		PNP	16 points
2EC-P	T8ECP2			32 points
1EN	T8EN1	EtherNet/IP	NPN	16 points
2EN	T8EN2			32 points
1EN-P	T8ENP1		PNP	16 points
2EN-P	T8ENP2			32 points
1D	T8D1	DeviceNet	NPN	16 points
2D	T8D2			32 points
1D-P	T8DP1		PNP	16 points
2D-P	T8DP2			32 points
1EB	T8EB1	CC-Link IEF Basic	NPN	16 points
2EB	T8EB2			32 points
1EB-P	T8EBP1		PNP	16 points
2EB-P	T8EBP2			32 points
1EF	T8EF1	CC-Link IE Field	NPN	16 points
2EF	T8EF2			32 points
1EF-P	T8EFP1		PNP	16 points
2EF-P	T8EFP2			32 points
1EP	T8EP1	PROFINET	NPN	16 points
2EP	T8EP2			32 points
1EP-P	T8EPP1		PNP	16 points
2EP-P	T8EPP2			32 points
1K	T8KC1	IO-Link	NPN	16 points
2KC	T8KC2			32 points
1KC-P	T8KCP1		PNP	16 points
2KC-P	T8KCP2			32 points

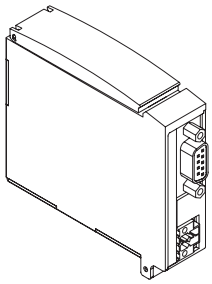

Related products

Mounting rail, blanking plug, tag plate

● Mounting rail

N4GR-BAA [length] -P70

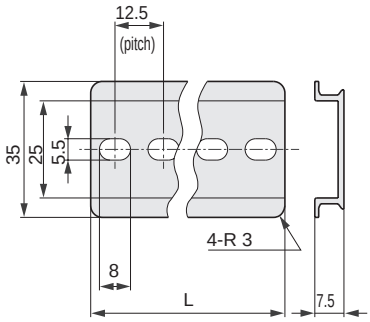

- The minimum length is 87.5 mm.
- Select the length in pitches of 12.5 mm.
- **Refer to page 701 for details.**

● Blanking plug

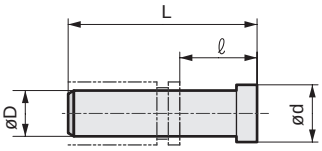

Model No.	D	L	ℓ	d
GWP4-B-P70	ø4	27	16	6
GWP6-B-P70	ø6	29	11.5	8
GWP8-B-P70	ø8	33	14	10
GWP10-B-P70	ø10	40	18.5	12

PG-P2-B (for ø1.8)

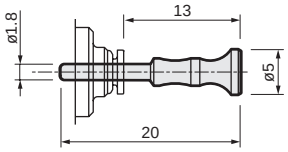

● Tag plate will be shipped upon being attached to the main unit of the manifold.
When required, place a circle on the field for tag plate in the manifold specifications on pages 703 to 706.

(Tag holder)

N4G1 R-TAG-HOLDER-P70

Ⓐ Model No.
N4G1
N4G2

(available in sets of 2.)

(Tag plate)

N4G1 R-TAG-PLATE-Ⓐ-200 *1 -P70

Ⓐ Model No.	Ⓑ Type		Ⓒ Length (mm) *1
N4G1	A	MN4GA1/2 shared	200
	B1	Wide type for MN4GB1	300
	B2	Thin type for MN4GB1 *2	400
N4G2	B	For MN4GB2	

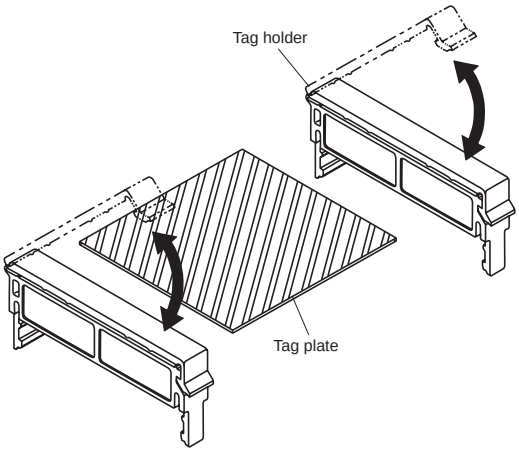

*1: As the (length) of the plates are available in the three different lengths of 200, 300, and 400, cut the plates to suit the product length.
*2: With the narrow type, manual operations are possible even with the tag plate covering the unit.
*3: Tag plate cannot be attached when spacers are used in the manifold specifications.
*4: Tag plate cannot be mounted when the DIN terminal box for MN3GA2/MN4GA2 is selected.

SCPD3
SCM
SSD2
MDC2
SMG
LCM
LCR
LCG
LCX
STM
STG
STR2
MRL2
GRC
Cylinder switch
MN3E MN4E
4GA/B
M4GA/B
MN4GA/B
F.R (module unit)
Clean F.R
Precision R
Press gauge Diff. press gauge
Electro-pneumatic R
Speed controller
Auxiliary valve
Fitting/ tube
Clean air unit
Pressure sensor
Flow rate sensor
Valve for air blow
Ending

Dimensions: tag plate

MN4GA1/2

● Tag plate

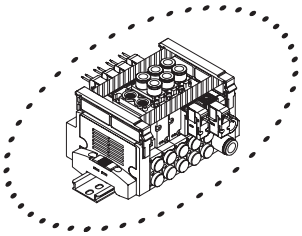

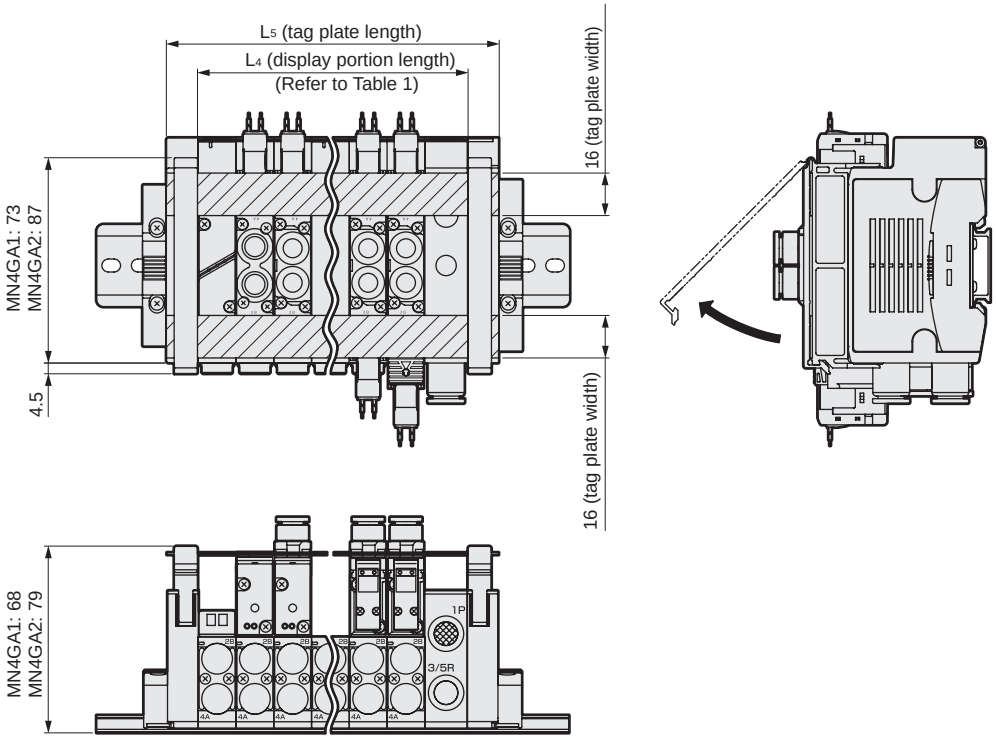

MN4GB1/2

● Tag plate

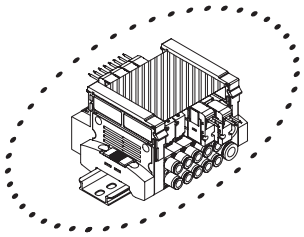

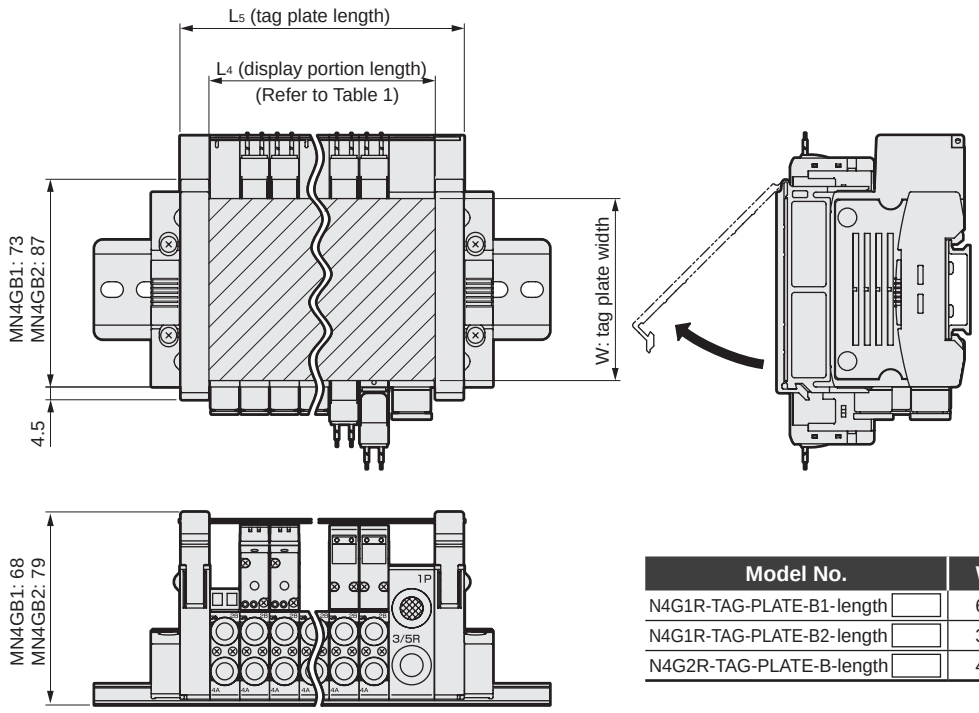

Model No.	W
N4G1R-TAG-PLATE-B1-length □	64
N4G1R-TAG-PLATE-B2-length □	30
N4G2R-TAG-PLATE-B-length □	45

Table 1: Formula for calculation of L_5 (tag plate length)

MN4GA1	Individual wiring	$L_5 = (10.5 \times n) + (16 \times m) + (10.5 \times l) + 20$
MN4GB1	Reduced wiring	$L_5 = (10.5 \times n) + (16 \times m) + (10.5 \times l) + 25$
MN4GA2	Individual wiring	$L_5 = (16 \times n) + (18 \times m) + (10.5 \times l) + 20$
MN4GB2	Reduced wiring	$L_5 = (16 \times n) + (18 \times m) + (10.5 \times l) + 25$

n : number of valve blocks
m : number of supply and exhaust blocks
l : number of partition blocks

Related products Air supply spacer

● Air supply spacer

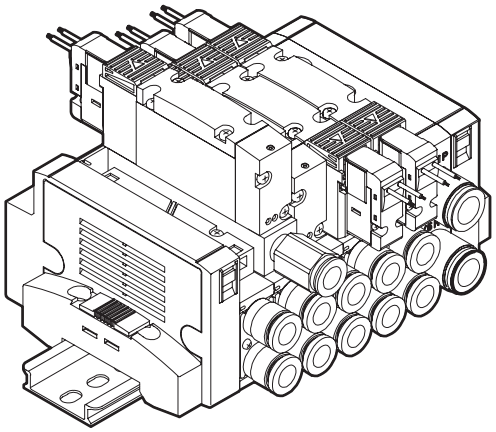

Specifications

Model No.	P→A/B		A/B→R		Weight g
	C [dm³/(s·bar)]	b	C [dm³/(s·bar)]	b	
4G1	0.70	0.23	0.93	0.16	8
4G2	1.6	0.17	1.8	0.16	35

Note 1: The values are for when a valve is mounted.
Note 2: Effective cross-sectional area S and sonic conductance C are converted as S ≒ 5.0 × C.

How to order discrete units

4G 2 R – P – GWS6 – P70

Ⓐ Air supply spacer model No.

Ⓑ Port size

Ⓒ Clean room specifications

Code	Content	Model No. 4GA1	4GB1	4GA2	4GB2
Ⓐ Air supply spacer model No.					
1	For 4G1	●			
2	For 4G2			●	
Ⓑ Port size					
Blank	M5 thread (4G1), Rc thread (4G2)	●		●	
GWS4	ø4 fitting	●			
GWS6	ø6 fitting	●		●	
GWS8	ø8 fitting			●	
06N	1/8NPT thread			●	
06G	G1/8 thread			●	
Ⓒ Clean room specifications					
	Structure / Material restriction				
P70	Exhaust treatment / -	●		●	

indicates specifications not available.

Attached products: 4G1 set screws (2), dedicated gasket (1)
4G2 set screws (2), PR check valves (2), body gasket (1)

⚠ Precautions for model selection

*1 Specify the positions and quantity of air supply spacers for manifold in the manifold specifications sheet.
*2 If the port A/B fitting is elbow, turn the air supply port of the air supply spacer toward the reverse side ("a" solenoid side).
*3 If the elbow (upward) port A/B fitting is used for the reduced wiring manifold, the air supply spacer cannot be selected.
*4 Combination with the masking plate is not supported.

SCPD3
SCM
SSD2
MDC2
SMG
LCM
LCR
LCG
LCX
STM
STG
STR2
MRL2
GRC
Cylinder switch
MN3E MN4E
4GA/B
M4GA/B
MN4GA/B
F.R (module unit)
Clean F.R
Precision R
Press gauge Diff. press gauge
Electro-pneumatic R
Speed controller
Auxiliary valve
Fitting/ tube
Clean air unit
Pressure sensor
Flow rate sensor
Valve for air blow
Ending

Dimensions

● 4G1

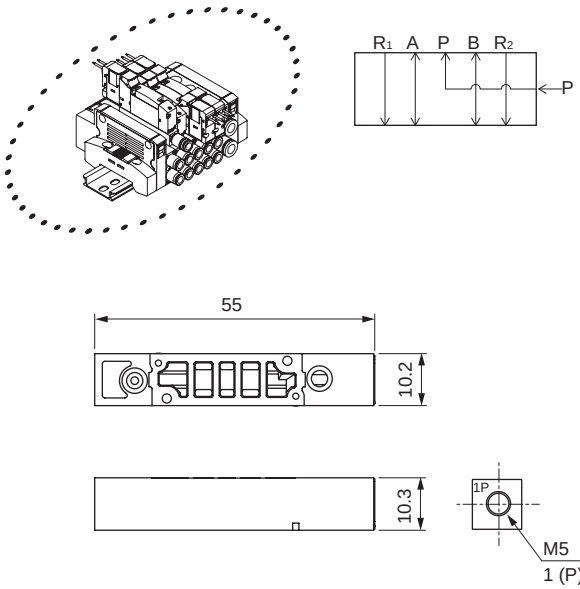

● 4G2

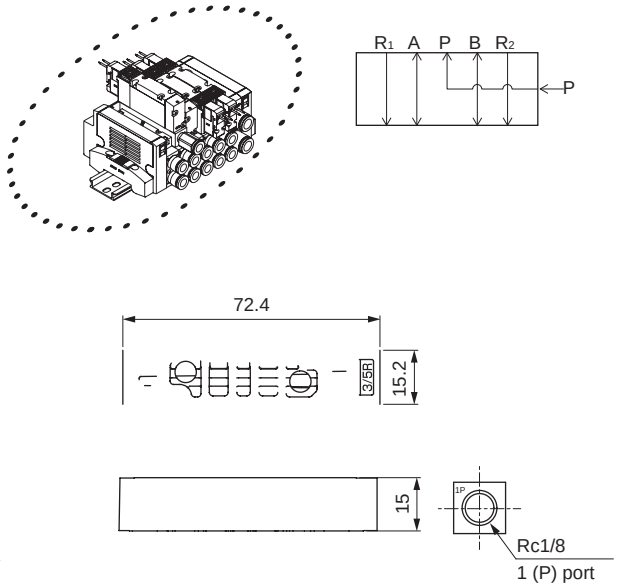

Dimensions when mounted

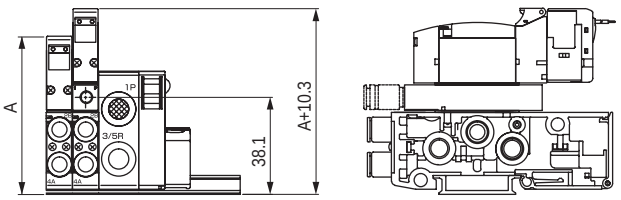

Dimensions when mounted

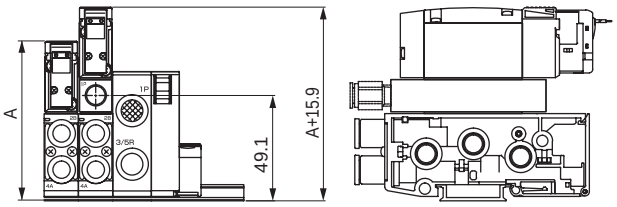

Note: For A dimensions, check the dimensions of the respective specifications.

Related products Exhaust spacer

● Exhaust spacer

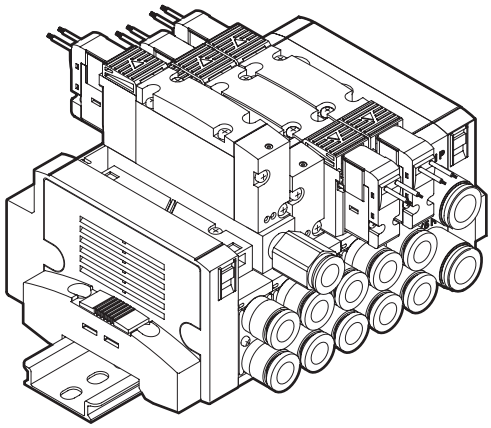

Specifications

Model No.	P→A/B		A/B→R		Weight g
	C [dm³/(s·bar)]	b	C [dm³/(s·bar)]	b	
4G1	0.94	0.28	0.68	0.33	7
4G2	1.5	0.24	1.9	0.24	34

Note 1: The values are for when a valve is mounted.
Note 2: Effective cross-sectional area S and sonic conductance C are converted as S ≈ 5.0 × C.

How to order discrete units

4G 2 R – R – GWS6 – P70

Ⓐ Exhaust spacer model No.

Ⓑ Port size

Ⓒ Clean room specifications

Code	Content	Model No. 4GA1	4GB1	4GA2	4GB2
Ⓐ Exhaust spacer model No.					
1	For 4G1	●			
2	For 4G2			●	
Ⓑ Port size					
Blank	M5 thread (4G1), Rc thread (4G2)	●		●	
GWS4	ø4 fitting	●			
GWS6	ø6 fitting	●		●	
GWS8	ø8 fitting			●	
06N	1/8NPT thread			●	
06G	G1/8 thread			●	
Ⓒ Clean room specifications					
	Structure / Material restriction				
P70	Exhaust treatment / -	●		●	

indicates specifications not available.

Attached products: 4G1 set screws (2), dedicated gasket (1)
4G2 set screws (2), PR check valves (2), body gasket (1)

⚠ Precautions for model selection

*1 Specify the positions and quantity of exhaust spacers for manifold in the manifold specifications sheet.
*2 If the port A/B fitting is elbow, turn the exhaust port of the exhaust spacer toward the reverse side ("a" solenoid side).
*3 If elbow upward port A/B fitting is used for the reduced wiring manifold, the exhaust spacer cannot be selected.
*4 Combination with the masking plate is not supported.

SCPD3
SCM
SSD2
MDC2
SMG
LCM
LCR
LCG
LCX
STM
STG
STR2
MRL2
GRC
Cylinder switch
MN3E MN4E
4GA/B
M4GA/B
MN4GA/B
F.R (module unit)
Clean F.R
Precision R
Press gauge Diff. press gauge
Electro-pneumatic R
Speed controller
Auxiliary valve
Fitting/ tube
Clean air unit
Pressure sensor
Flow rate sensor
Valve for air blow
Ending

Dimensions

● 4G1

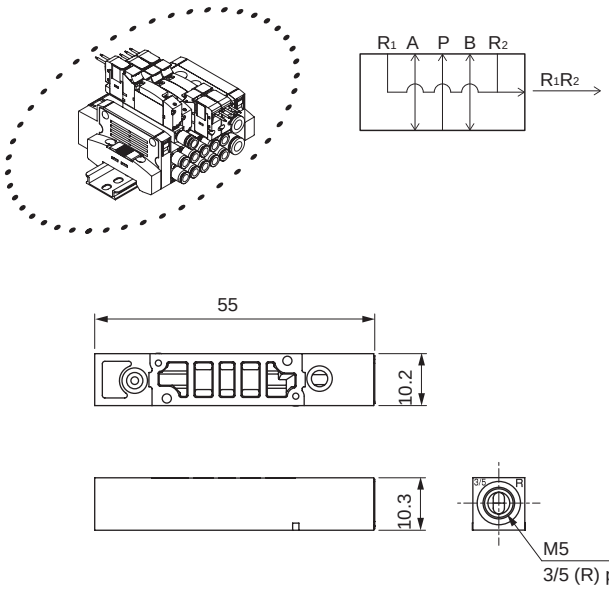

● 4G2

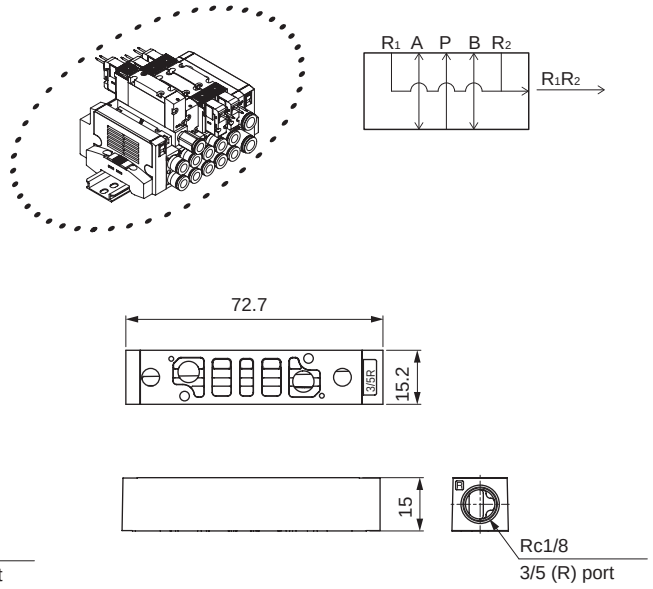

Dimensions upon mounting

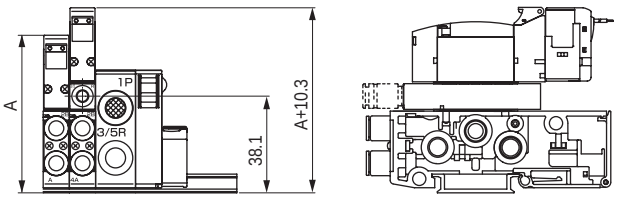

Dimensions upon mounting

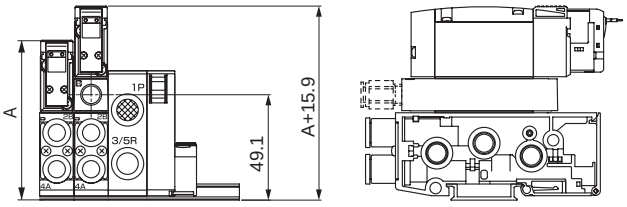

Related products Double wiring (with single spare wiring)

● Double wiring (with single spare wiring) (W1)

Manifold

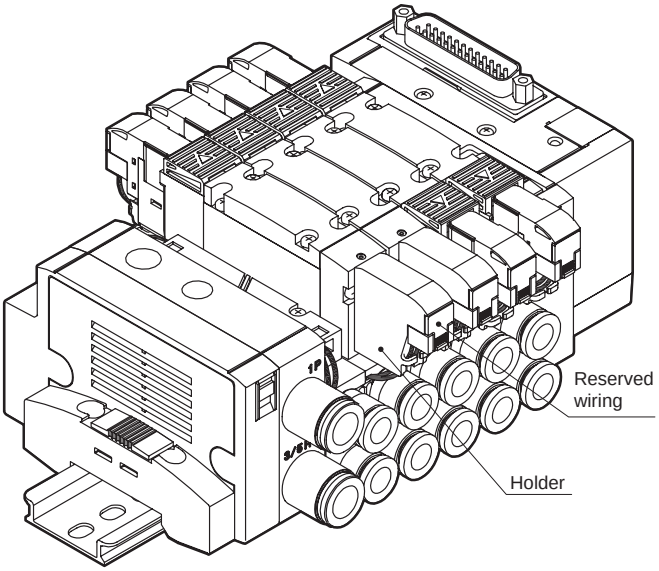

Discrete valve (A2N)

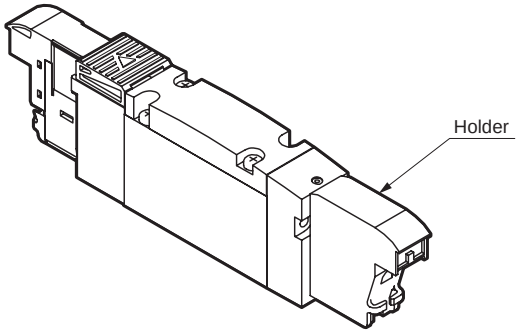

A holder for retaining the socket assembly is attached.
(A-type socket assembly is not attached.)
This is used to impose and retain the socket assembly that is no longer required when the valve is changed from the double solenoid to the single solenoid.

Spare wiring (holder and A type socket assembly) is included on the cap side for single solenoid valves. This simplifies the workflow when changing valves from a single solenoid to a double solenoid, as you do not need to prepare the A type socket assembly separately.

How to order

● Model No. with manifold installed (example)

MN4GB1 1 0 R - C6 - T30 W1 H - 10 - 3 - P70

- Ⓐ Model No.
- Ⓑ Solenoid position
- Ⓒ Port size
- Ⓓ Wiring method
- Ⓔ W1
- Ⓕ Option
- Ⓖ Station No.
- Ⓗ Voltage
- Ⓘ Clean room specifications

Code	Content
Ⓔ Terminal and connector pin wiring	
W1	Double wiring (with single spare wiring)

* For details of model No., refer to How to order for each individual series.
Combination with port sizes C*NC and C*NO is not supported.

Related products Reduced wiring mall

● Reduced wiring mall (Q)

This product protects the A-type connector lead wire part.

・For the reduced wiring manifold (T*, T*R) and reduced wiring discrete valve (A2N), it can be selected.

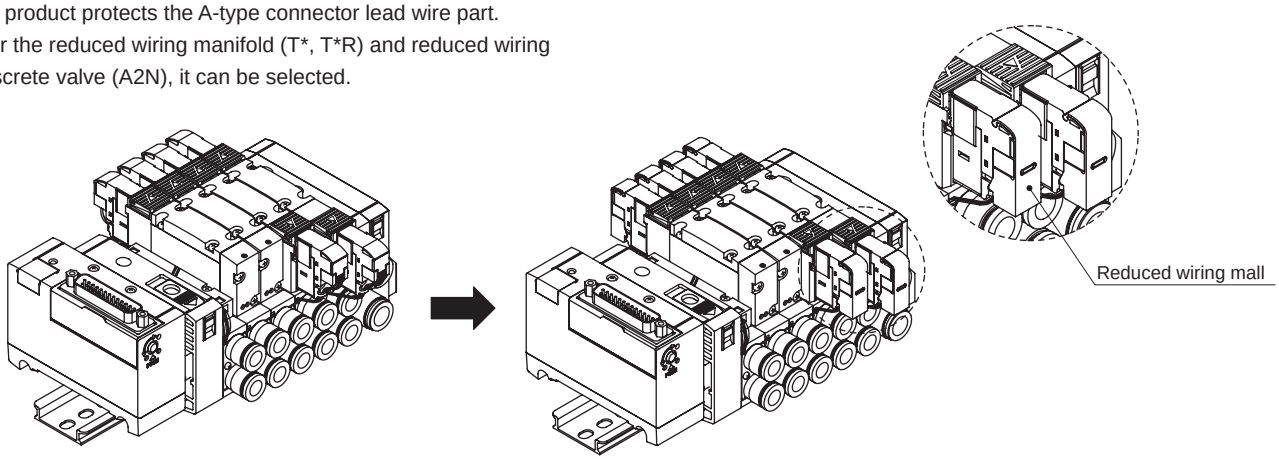

Standard

When selecting Q (reduced wiring mall)

How to order

● Model No. with manifold installed (example)

MN4GB1 1 0 R - C6 - T30 W Q - 10 - 3 - P70

- Ⓐ Model No.
- Ⓑ Solenoid position
- Ⓒ Port size
- Ⓓ Wiring method
- Ⓔ Terminal and connector pin wiring
- Ⓕ Option
- Ⓖ Station No.
- Ⓗ Voltage
- Ⓘ Clean room specifications

Code	Content
Ⓕ Option	
Q	Reduced wiring mall

● Dimensions

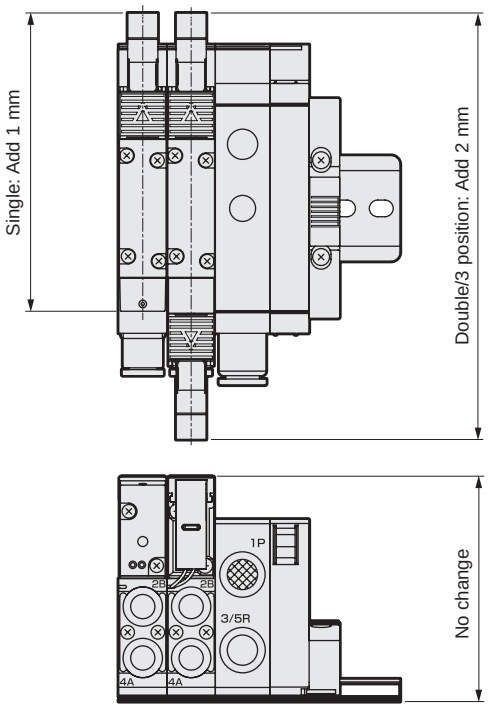

Reduced wiring mall closed

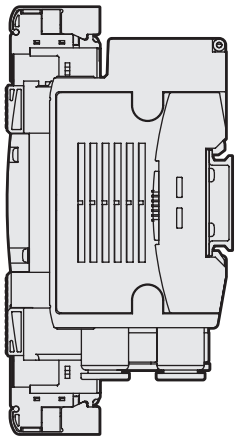

Opened

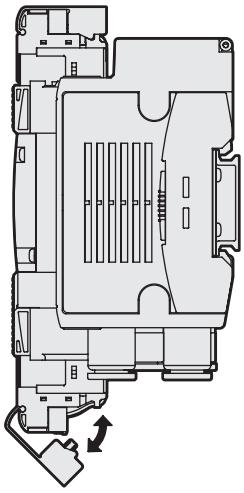

Related parts

1. MN4G cartridge push-in fitting for supply and exhaust block

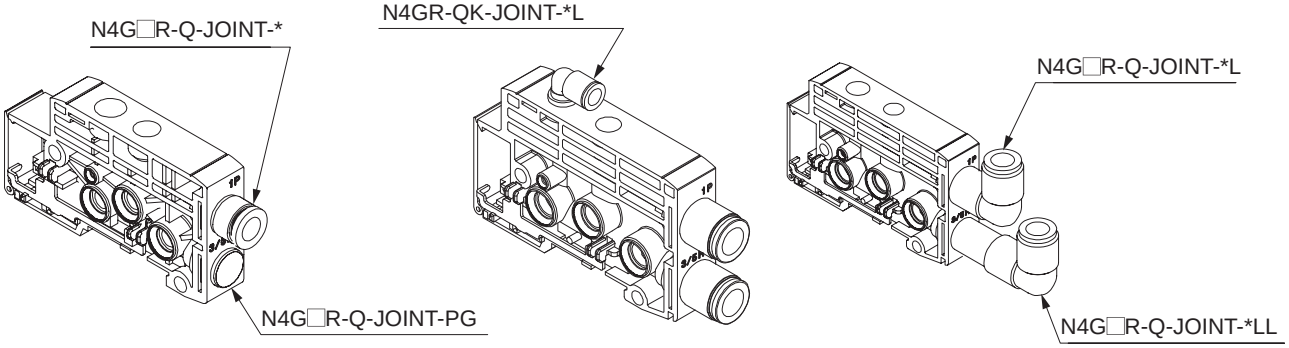

1.1 MN4G1 supply and exhaust block, fitting for 1 (P), 3/5 (R)

Port size	Part model No.
ø6 straight	N4G1R-Q-JOINT-6-P70
ø8 straight	N4G1R-Q-JOINT-8-P70
ø6 elbow	N4G1R-Q-JOINT-6L, 6LL-P70
ø8 elbow	N4G1R-Q-JOINT-8L, 8LL-P70
ø1/4 inch straight	N4G1R-Q-JOINT-6N-P70
ø5/16 inch straight	N4G1R-Q-JOINT-8N-P70
ø1/4 inch elbow	N4G1R-Q-JOINT-6LN, 6LLN-P70
ø5/16 inch elbow	N4G1R-Q-JOINT-8LN, 8LLN-P70
Plug cartridge	N4G1R-Q-JOINT-PG

1.2 MN4G2 supply and exhaust block, fitting for 1 (P), 3/5 (R)

Port size	Part model No.
ø8 straight	N4G2R-Q-JOINT-8-P70
ø10 straight	N4G2R-Q-JOINT-10-P70
ø8 elbow	N4G2R-Q-JOINT-8L, 8LL-P70
ø10 elbow	N4G2R-Q-JOINT-10L, 10LL-P70
ø5/16 inch straight	N4G2R-Q-JOINT-8N-P70
ø3/8 inch straight	N4G2R-Q-JOINT-10N-P70
ø5/16 inch elbow	N4G2R-Q-JOINT-8LN, 8LLN-P70
ø3/8 inch elbow	N4G2R-Q-JOINT-10LN, 10LLN-P70
Plug cartridge	N4G1R-Q-JOINT-PG

1.3 MN4G1/2 common, fitting for 12/14 (PA)

Port size	Part model No.
ø6 straight	N4GR-QK-JOINT-6-P70
ø6 elbow	N4GR-QK-JOINT-6L-P70

MN4GA/4GB Series

SCPD3
SCM
SSD2
MDC2
SMG
LCM
LCR
LCG
LCX
STM
STG
STR2
MRL2
GRC
Cylinder switch
MN3E MN4E
4GA/B
M4GA/B
MN4GA/B
F.R (module unit)
Clean F.R
Precision R
Press gauge Diff. press gauge
Electro-pneumatic R
Speed controller
Auxiliary valve
Fitting/ tube
Clean air unit
Pressure sensor
Flow rate sensor
Valve for air blow
Ending

How to fill out block manifold MN4G Series manifold specifications

● Example of manifold model No.

MN 4 GA1 8 0R− CX − T50 W H − 8 − 3 − P70

Ⓐ Model No. Ⓑ Solenoid position Ⓒ Port size Ⓓ Electrical connections (reduced wiring) Ⓔ Terminal / connector pin arrangement (Note: Be sure to fill in for reduced wiring.) Ⓕ Option Ⓖ Station No. Ⓗ Voltage Ⓘ Clean room specifications

When filling in this field, select the model No. from “Block configurations” (pages 683 to 698).

Part name	Model No.	Layout position 1	2	3	4	5	6	7	8	9	10	11	12	13	14	15	16	17	18	19	20	21	22	23	24	25	26	27	28	29	30	Qty.
Electrical block (pages 688, 689)	N4G1R-T 50	○																														1
Valve block with solenoid valve (page 684)	N4GA1 1 0R- C4 -		○	○																												2
	N4GA1 2 0R- C6 -					○																										1
	N4GA1 3 0R- C4 -				○																											1
	N4GA1 0R- -																															
	N4GA1 0R- -																															
	N4GA1 0R- -																															
	N3GA1 1 0R- C4 -									○	○	○																				3
	N3GA1 0R- -																															
Valve block with masking plate (page 684)	N4GA1R-MP																															
	N4GA1R-MPS																															
	N4GA1R-MPD						○																									1
Supply and exhaust block (page 686)	N4G1R-Q - 8L							○					○																			2
	N4G1R-Q -																															
	N4G1R-Q -																															
Partition block (page 687)	N4G1R-S A								○																							1
	N4G1R-S																															
	N4G1R-S																															
End block (page 687)	N4G1R-E R													○																		1
	N4G1R-E																															

Mounting rail	L_2= (How to calculate length on next page)	Blanking plug						Tag plate (attached)		Accessories
		GWP4-B		GWP6-B		GWP8-B		A	○	
		Cable with D sub-connector		4GR-CABLE-D0□-□		Push-in fitting tube remover (standard attached) ☑ Not required (Check)				

Place a check here if the tube remover (standard attached product) is not required.

* A circuit diagram of the above manifold model No. is provided on the next page. for reference.

Preparing the manifold specifications

● Complete from the left end, with the piping port facing forward.
(Please include the model No. of the block selected (from block configurations (pages 683 to 698) and instructions for the arrangement thereof.)
● Indicate the total number of blocks specified in the column for quantity on the right end of the table.
● Place a circle on attached products that are required.
● Fill in the length of the mounting rail. (Fill in only when a length other than the standard length is required.)
● As there are manifold specifications for each of the various series, fill in the form for the corresponding specifications.

· MN4GA1: page 703
· MN4GB1: page 704
· MN4GA2: page 705
· MN4GB2: page 706
· MN4GA×1/2 (Mix manifold): page 707
· MN4GB×1/2 (Mix manifold): page 708

MN4GA/4GB Series

● Mounting rail model No.: N4GR-BAA length - P70

Regarding the length (L2) of the mounting rail

(1) Determine the rail length using the calculation method shown below.
The obtained length is standard.

(2) For the standard length, it is not necessary to write the length (L2) in the specifications.
Indicate the length when using a non-standard length.

● How to determine the length of the mounting rail

Manifold length (L1) = (A × Valve Block Qty.) + (B × Supply and exhaust Block Qty.) + (C × Partition Block Qty.) + D + E (Electrical block, Mix block)

Mounting rail length (L2) = L2' × 12.5 A, B, C, D, and E each indicate the length (width) of each block.

$$L2' : \frac{L1 + 40}{12.5} \rightarrow \text{Decimals rounded up}$$

Rail mounting pitch (L3) = L2 - 12.5

Block length (width) dimensions table (mm)

			MN4GA/B1	MN4GA/B2	MN4G1/2MIX MN4GA/B1	MN4G1/2MIX MN4GA/B2
A	Valve block		10.5	16	10.5	16
B	Supply and exhaust block		16	18	16	18
C	Partition block		10.5	10.5	10.5	10.5
D	Individual wiring		41.2	46.2	43.7	
	Electrical block for reduced wiring	T10/T11	83.9	86.4	86.4	
		T10R/T11R	83.9	86.4	83.9	
		T30/T5*	69.4	71.9	71.9	
		T30R/T5*R	69.4	71.9	69.4	
		T6*	143.6	146.1	146.1	
		T7*	64.4	66.9	66.9	
		T8*	64.4	66.9	66.9	
E	Mix block				16	

* The end block is included in the electrical block.

● DIN rail length quick reference table

L1 ·· Manifold Length	47.5 or less	Over 47.5 to 60 or less	60 to 72.5	72.5 to 85	85 to 97.5	97.5 to 110	110 to 122.5	122.5 to 135	135 to 147.5	147.5 to 160	160 to 172.5	172.5 to 185	185 to 197.5	197.5 to 210	210 to 222.5	222.5 to 235	235 to 247.5	247.5 to 260	260 to 272.5	272.5 to 285	285 to 297.5	297.5 to 310	310 to 322.5	322.5 to 335	335 to 347.5	347.5 to 360
L2 ·· Rail Length	87.5	100	112.5	125	137.5	150	162.5	175	187.5	200	212.5	225	237.5	250	262.5	275	287.5	300	312.5	325	337.5	350	362.5	375	387.5	400
Pitch L3	75	87.5	100	112.5	125	137.5	150	162.5	175	187.5	200	212.5	225	237.5	250	262.5	275	287.5	300	312.5	325	337.5	350	362.5	375	387.5

Note 1: When L1 exceeds this table, calculate the length by referring to “How to calculate the length of the mounting rail”.

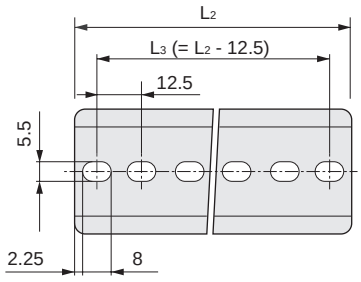

MN4GA/4GB Series

How to fill out the wiring specifications

This is not required with standard wiring or double wiring.

● Wiring specifications (example)

* The following example has been filled out in accordance with the manifold specifications on the previous page.

Connector pin No.				Valve No.																							
T50/T50R	**T51/T51R**	**T52/T52R**	**T53/T53R**	1	2	3	4	5	6	7	8	9	10	11	12	13	14	15	16	17	18	19	20	21	22	23	24
1	1	1	1	**a**																							
2	2	2	2		**a**																						
3	3	3	3				**a**																				
4	4	4	4				**b**																				
5	5	5	5					**a**																			
6	6	6	6					**b**																			
7	7	7	7			**a**																					
8	8	8	8			**b**																					
9 - Power supply	9	9 COM	9																								
10 + (COM) power supply	10	10 COM	10																								
11	11		11						**a**																		
12	12		12							**a**																	
13	13		13								**a**																
14	14		14																								
15	15		15																								
16	16		16																								
17	17		17																								
18	18		18																								
19 - Power supply	19 COM		19																								
20 + (COM) power supply	20 COM		20																								
			21																								
			22																								
			23																								
			24																								
			25 COM																								
			26 COM																								

* Please be aware that when the wiring method is T50/T50R, the polarity of COM will be + (plus).

● Precaution regarding wiring specifications

(1) Fill in and attach the form to the manifold specifications for those other than the standard wiring or double wiring. Separately consult us as products will be prepared on a made to order basis in such case.
(2) The valve No. is determined by only counting the valve blocks in order from the left with the ports facing forward. Please be careful as this will differ from the numbers for the mounting positions.
(3) As the connector pin No. and valve No. will differ for every reduced wiring method (T1*/T30/T5*/T6*/T7*/T8*), fill out the form upon reviewing the precautions (pages 714 to 734) for each reduced wiring method.
(4) Wiring (socket assembly) will be included in the valve blocks with masking plates. A side only for "-MPS". On both the A and B sides for "-MPD".
(5) It is not possible to assemble a double solenoid or 3-position solenoid valve to "-MPS". Make arrangements for the valve block with solenoid valve and perform the task of expansion.
(6) It is not possible to install spare wires for expansions of stations in advance. Wire the socket assembly of the solenoid valve for expansion of stations. Refer to page 736 for instructions on how to expand stations.

References circuit diagram Simplified circuit diagram of manifold model No. (example) from previous page

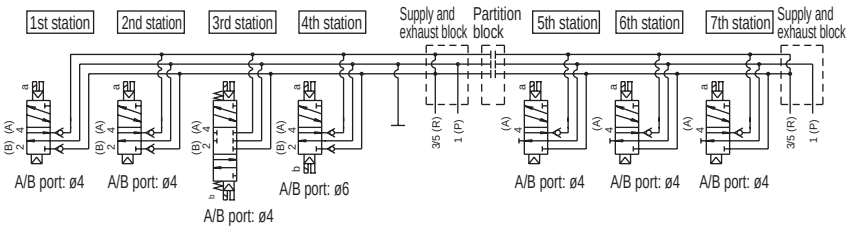

* Manifold stations are set in order from the left with the piping port facing forward.
(The electrical blocks, supply and exhaust blocks,partition block, and end block are not included in the number of manifold stations)
* Select the model No. from block components (pages 683 to 698) and the page for model nos. of each of the specifications.
* The positions of arrangements are set in order from the left with the piping port facing forward.

MN4GA1 Block manifold specifications

Issue date / /

Company

Contact

Order No.

● Contact ● Quantity set(s) ● Request date /

Slip No.	Order No.

● Manifold model No.

MN ☐ GA1 ☐ 0R− ☐ − ☐ ☐ ☐ − ☐ − ☐ − ☐

Ⓐ Model No. Ⓑ Solenoid position Ⓒ Port size Ⓓ Electrical connections (reduced wiring) Ⓔ Terminal / connector pin arrangement (Note: Be sure to fill in for reduced wiring.) Ⓕ Option Ⓖ Station No. Ⓗ Voltage Ⓘ Clean room specifications

When filling in this field, select the model No. from "Block components" (pages 683 to 698).

Part name (page)	Model No.	Layout position 1	2	3	4	5	6	7	8	9	10	11	12	13	14	15	16	17	18	19	20	21	22	23	24	25	26	27	28	29	30	Qty.
Electrical block (pages 688, 689)	N4G1R-T ☐																															
Valve block with solenoid valve (page 684)	N4GA1 ☐ 0R- ☐																															
	N4GA1 ☐ 0R- ☐																															
	N4GA1 ☐ 0R- ☐																															
	N4GA1 ☐ 0R- ☐																															
	N4GA1 ☐ 0R- ☐																															
	N4GA1 ☐ 0R- ☐																															
	N3GA1 ☐ 0R- ☐																															
	N3GA1 ☐ 0R- ☐																															
Valve block with masking plate (page 684)	N4GA1R-MP																															
	N4GA1R-MPS																															
	N4GA1R-MPD																															
Air supply spacer (page 693)	4G1R-P- ☐																															
	4G1R-P- ☐																															
Exhaust spacer (page 695)	4G1R-R- ☐																															
Supply and exhaust block (page 686)	N4G1R-Q ☐ - ☐																															
	N4G1R-Q ☐ - ☐																															
	N4G1R-Q ☐ - ☐																															
Partition block (page 687)	N4G1R-S ☐																															
	N4G1R-S ☐																															
	N4G1R-S ☐																															
End block (page 687)	N4G1R-E ☐																															
	N4G1R-E ☐																															

Mounting rail	Blanking plug								Tag plate (attached)		Accessories
L_2= ☐	PG-P2-B		GWP4-B		GWP6-B		GWP8-B		A		
* Write an integer multiple of 12.5.	Cable with D sub-connector				4GR-CABLE-D0*-*		Push-in fitting tube remover (standard attached) ☐ Not required (check)				
(How to determine the length page 701)											

MN4GB1 Block manifold specifications

Issue date / /

Company

Contact

Order No.

● Contact ● Quantity set(s) ● Request date /

Slip No.	Order No.

● Manifold model No.

MN4GB1 ☐ 0R– ☐ – ☐ ☐ ☐ – ☐ – ☐ – ☐

Ⓐ Model No. Ⓑ Solenoid position Ⓒ Port size Ⓓ Electrical connections (reduced wiring) Ⓔ Terminal / connector pin arrangement (Note: Be sure to fill in for reduced wiring.) Ⓕ Option Ⓖ Station No. Ⓗ Voltage Ⓘ Clean room specifications

When filling in this field, select the model No. from "Block components" (pages 683 to 698).

Part name (page)	Model No.	Layout position 1	2	3	4	5	6	7	8	9	10	11	12	13	14	15	16	17	18	19	20	21	22	23	24	25	26	27	28	29	30	Qty.
Electrical block (pages 688, 689)	N4G1R-T ☐																															
Valve block with solenoid valve (page 684)	N4GB1 ☐ 0R- ☐ - ☐																															
	N4GB1 ☐ 0R- ☐ - ☐																															
	N4GB1 ☐ 0R- ☐ - ☐																															
	N4GB1 ☐ 0R- ☐ - ☐																															
	N4GB1 ☐ 0R- ☐ - ☐																															
	N4GB1 ☐ 0R- ☐ - ☐																															
	N3GB1 ☐ 0R- ☐ - ☐																															
	N3GB1 ☐ 0R- ☐ - ☐																															
Valve block with masking plate (page 684)	N4GB1R-MP- ☐																															
	N4GB1R-MPS- ☐																															
	N4GB1R-MPD- ☐																															
Air supply spacer (page 693)	4G1R-P- ☐																															
	4G1R-P- ☐																															
Exhaust spacer (page 695)	4G1R-R- ☐																															
Supply and exhaust block (page 686)	N4G1R-Q ☐ - ☐																															
	N4G1R-Q ☐ - ☐																															
	N4G1R-Q ☐ - ☐																															
Partition block (page 687)	N4G1R-S ☐																															
	N4G1R-S ☐																															
	N4G1R-S ☐																															
End block (page 687)	N4G1R-E ☐																															
	N4G1R-E ☐																															

Mounting rail	Blanking plug								Tag plate (attached)				Accessories
L_2= ☐	PG-P2-B		GWP4-B		GWP6-B		GWP8-B		B1		B2		
* Write an integer multiple of 12.5.	Cable with D sub-connector		4GR-CABLE-D0☐-☐			Push-in fitting tube remover (standard attached) ☐ Not required (check)							
(How to determine the length page 701)													

MN4GA2 Block manifold specifications

Issue date / /

Company

Contact

Order No.

● Contact ● Quantity set(s) ● Request date /

Slip No.	Order No.

● Manifold model No.

MN ☐ GA2 ☐ 0R− ☐ − ☐ ☐ ☐ − ☐ − ☐ − ☐

Ⓐ Model No. Ⓑ Solenoid position Ⓒ Port size Ⓓ Electrical connections (reduced wiring) Ⓔ Terminal/connector pin arrangement (Note: Be sure to fill in for reduced wiring.) Ⓕ Option Ⓖ Station No. Ⓗ Voltage Ⓘ Clean room specifications

When filling in this field, select the model No. from "Block components" (pages 683 to 698).

Part name (page)	Model No.	Layout position 1	2	3	4	5	6	7	8	9	10	11	12	13	14	15	16	17	18	19	20	21	22	23	24	25	26	27	28	29	30	Qty.
Electrical block (pages 688, 689)	N4G1R-T ☐																															
Valve block with solenoid valve (page 684)	N4GA2 ☐ 0R- ☐																															
	N4GA2 ☐ 0R- ☐																															
	N4GA2 ☐ 0R- ☐																															
	N4GA2 ☐ 0R- ☐																															
	N4GA2 ☐ 0R- ☐																															
	N4GA2 ☐ 0R- ☐																															
	N3GA2 ☐ 0R- ☐																															
	N3GA2 ☐ 0R- ☐																															
Valve block with masking plate (page 684)	N4GA2R-MP																															
	N4GA2R-MPS																															
	N4GA2R-MPD																															
Air supply spacer (page 693)	4G2R-P- ☐																															
	4G2R-P- ☐																															
Exhaust spacer (page 695)	4G2R-R- ☐																															
Supply and exhaust block (page 686)	N4G2R-Q ☐ - ☐																															
	N4G2R-Q ☐ - ☐																															
	N4G2R-Q ☐ - ☐																															
Partition block (page 687)	N4G2R-S ☐																															
	N4G2R-S ☐																															
	N4G2R-S ☐																															
End block (page 687)	N4G2R-E ☐																															
	N4G2R-E ☐																															
Mounting rail	L_2= ☐ * Write an integer multiple of 12.5. (How to determine the length page 701)	Blanking plug: GWP4-B ☐ GWP6-B ☐ GWP8-B ☐ GWP10-B ☐																														Tag plate (attached): A ☐
		Cable with D sub-connector: 4GR-CABLE-D0☐-☐ ☐																														Push-in fitting tube remover (attached as standard), When not required (check the box) ☐

Accessories

MN4GB2 Block manifold specifications

Issue date / /

Company

Contact

Order No.

● Contact ● Quantity set(s) ● Request date /

Slip No.	Order No.

● Manifold model No.

MN4GB2 ☐ 0R– ☐ – ☐ ☐ ☐ – ☐ – ☐ – ☐

Ⓐ Model No. Ⓑ Solenoid position Ⓒ Port size Ⓓ Electrical connections (reduced wiring) Ⓔ Terminal / connector pin arrangement (Note: Be sure to fill in for reduced wiring.) Ⓕ Option Ⓖ Station No. Ⓗ Voltage Ⓘ Clean room specifications

When filling in this field, select the model No. from "Block components" (pages 683 to 698).

Part name (page)	Model No.	Layout position 1	2	3	4	5	6	7	8	9	10	11	12	13	14	15	16	17	18	19	20	21	22	23	24	25	26	27	28	29	30	Qty.
Electrical block (pages 688, 689)	N4G2R-T ☐																															
Valve block with solenoid valve (page 684)	N4GB2 ☐ 0R- ☐ - ☐																															
	N4GB2 ☐ 0R- ☐ - ☐																															
	N4GB2 ☐ 0R- ☐ - ☐																															
	N4GB2 ☐ 0R- ☐ - ☐																															
	N4GB2 ☐ 0R- ☐ - ☐																															
	N4GB2 ☐ 0R- ☐ - ☐																															
	N3GB2 ☐ 0R- ☐ - ☐																															
	N3GB2 ☐ 0R- ☐ - ☐																															
Valve block with masking plate (page 684)	N4GB2R-MP- ☐																															
	N4GB2R-MPS- ☐																															
	N4GB2R-MPD- ☐																															
Air supply spacer (page 693)	4G2R-P- ☐																															
	4G2R-P- ☐																															
Exhaust spacer (page 695)	4G2R-R- ☐																															
Supply and exhaust block (page 686)	N4G2R-Q ☐ - ☐																															
	N4G2R-Q ☐ - ☐																															
	N4G2R-Q ☐ - ☐																															
Partition block (page 687)	N4G2R-S ☐																															
	N4G2R-S ☐																															
	N4G2R-S ☐																															
End block (page 687)	N4G2R-E ☐																															
	N4G2R-E ☐																															

Mounting rail	L_2= ☐ * Write an integer multiple of 12.5. (How to determine the length page 701)	Blanking plug								Tag plate (attached)		Accessories
		GWP4-B		GWP6-B		GWP8-B		GWP10-B		B		
		Cable with D sub-connector		4GR-CABLE-D0☐-☐								

MN4GA1/2 Mix manifold specifications

Issue date / /

● Contact ● Quantity set(s) ● Request date /

Slip No.	Order No.

Company

Contact

Order No.

● Manifold model No.

MN ☐ GAX12R– ☐ – ☐ ☐ ☐ – ☐ – ☐ – ☐

Ⓐ Model No. Ⓒ Port size Ⓓ Electrical connections (reduced wiring) Ⓔ Terminal/connector pin arrangement (Note: Be sure to fill in for reduced wiring.) Ⓕ Option Ⓖ Station No. Ⓗ Voltage Ⓘ Clean room specifications

When filling in this field, select the model No. from "Block components" (pages 683 to 698).

Part name (page)	Model No.	Layout position 1	2	3	4	5	6	7	8	9	10	11	12	13	14	15	16	17	18	19	20	21	22	23	24	25	26	27	28	29	30	Qty.
Electrical block (pages 688, 689)	N4G ☐ R-T ☐																															
Valve block with solenoid valve (page 684)	N4GA ☐ 0R- ☐																															
	N4GA ☐ 0R- ☐																															
	N4GA ☐ 0R- ☐																															
	N4GA ☐ 0R- ☐																															
	N4GA ☐ 0R- ☐																															
	N4GA ☐ 0R- ☐																															
	N3GA ☐ 0R- ☐																															
	N3GA ☐ 0R- ☐																															
Valve block with masking plate (page 684)	N4GA ☐ R-MP																															
	N4GA ☐ R-MPS																															
	N4GA ☐ R-MPD																															
Air supply spacer (page 693)	4G1R-P- ☐																															
	4G2R-P- ☐																															
Exhaust spacer (page 695)	4G1R-R- ☐																															
	4G2R-R- ☐																															
Mix block (page 687)	N4G12R-MIX																															
Supply and exhaust block (page 686)	N4G ☐ R-Q ☐ - ☐																															
	N4G ☐ R-Q ☐ - ☐																															
	N4G ☐ R-Q ☐ - ☐																															
Partition block (page 687)	N4G ☐ R-S ☐																															
	N4G ☐ R-S ☐																															
	N4G ☐ R-S ☐																															
End block (page 687)	N4G ☐ R-E ☐																															
	N4G ☐ R-E ☐																															

Mounting rail	Blanking plug																				Accessories
L_2= ☐ * Write an integer multiple of 12.5. (How to determine the length page 701)	PG-P2-B		GWP ☐ -B			GWP ☐ -B			GWP ☐ -B			GWP ☐ -B									
	Cable with D-sub-connector		4GR-CABLE-D0☐-☐			Push-in fitting tube remover (standard attached), When not required (check) ☐															

MN4GB1/2 Mix manifold specifications sheet

● Contact ● Quantity Set ● Delivery date /

Issued / /

Slip No.	Order No.

Company

Contact

Order No.

● Manifold model No.

MN4GBX12R- ☐ - ☐ ☐ ☐ - ☐ - ☐

Ⓐ Model No. Ⓒ Port size Ⓓ Electrical connections (Reduced wiring connection) Ⓔ Terminal/connector pin array (Note: Fill in for reduced wiring.) Ⓕ Option Ⓖ Station No. Ⓗ Voltage

When filling in this field, select the model No. from "Block configurations" (pages 683 to 698).

Part name	Model No.	Layout position 1	2	3	4	5	6	7	8	9	10	11	12	13	14	15	16	17	18	19	20	21	22	23	24	25	26	27	28	29	30	Quantity
Wiring block (pages 688, 689)	N4G ☐ R-T ☐																															
Valve block with solenoid valve (page 684)	N4GB ☐ 0R- ☐ - ☐																															
	N4GB ☐ 0R- ☐ - ☐																															
	N4GB ☐ 0R- ☐ - ☐																															
	N4GB ☐ 0R- ☐ - ☐																															
	N4GB ☐ 0R- ☐ - ☐																															
	N4GB ☐ 0R- ☐ - ☐																															
	N3GB ☐ 0R- ☐ - ☐																															
	N3GB ☐ 0R- ☐ - ☐																															
Valve block with masking plate (page 684)	N4GB ☐ R-MP- ☐																															
	N4GB ☐ R-MPS- ☐																															
	N4GB ☐ R-MPD- ☐																															
Air supply spacer (page 693)	4G1R-P- ☐																															
	4G2R-P- ☐																															
Exhaust spacer (Page 695)	4G1R-R- ☐																															
	4G2R-R- ☐																															
Mixed block (Page 687)	N4G12R-MIX																															
Supply and exhaust block (page 686)	N4G ☐ R-Q ☐ - ☐																															
	N4G ☐ R-Q ☐ - ☐																															
	N4G ☐ R-Q ☐ - ☐																															
Partition block (page 687)	N4G ☐ R-S ☐																															
	N4G ☐ R-S ☐																															
	N4G ☐ R-S ☐																															
End block (page 687)	N4G ☐ R-E ☐																															
	N4G ☐ R-E ☐																															
Mounting rail	L_2= ☐ * Write an integer multiple of 12.5. (How to determine the length page 701)	Blanking plug: PG-P2-B / GWP ☐ -B / GWP ☐ -B / GWP ☐ -B / GWP ☐ -B																														Accessory
		Cable with D sub-connector / 4GR-CABLE-D0☐-☐ / Push-in fitting tube remover (attached as standard) ☐ Not required (check the box)																														

Common terminal block (T10/T11) wiring specifications

* Please fill in and attach to the manifold specifications for those other than the standard wiring or double wiring. (Available on a made to order basis)
* This is not required with standard wiring/double wiring.

Connector pin No.		Valve No.																							
T10 ☐	**T11** ☐	1	2	3	4	5	6	7	8	9	10	11	12	13	14	15	16	17	18	19	20	21	22	23	24
1	1																								
2	2																								
3	3																								
4	4																								
5	5																								
6	6																								
7	7																								
8	8																								
9	9																								
10	10																								
11	11																								
12	12																								
13	13																								
14	14																								
15	15																								
16	16																								
COM	17																								
COM	18																								
	19																								
	20																								
	21																								
	22																								
	23																								
	24																								
	COM																								
	COM																								

D sub-connector (T30) wiring specifications

* Please fill in and attach to the manifold specifications for those other than the standard wiring or double wiring. (Available on a made to order basis)
* This is not required with standard wiring/double wiring.

Connector pin No.	Valve No.																							
T30 ☐	1	2	3	4	5	6	7	8	9	10	11	12	13	14	15	16	17	18	19	20	21	22	23	24
1																								
14																								
2																								
15																								
3																								
16																								
4																								
17																								
5																								
18																								
6																								
19																								
7																								
20																								
8																								
21																								
9																								
22																								
10																								
23																								
11																								
24																								
12																								
25																								
13 (COM)																								

Flat cable connector (T50/T51/T52/T53) wiring specifications

* Please fill in and attach to the manifold specifications for those other than the standard wiring or double wiring. (Available on a made to order basis)
* This is not required with standard wiring/double wiring.

Connector pin No.				Valve No.																							
T50/T50R	**T51/T51R**	**T52/T52R**	**T53/T53R**	1	2	3	4	5	6	7	8	9	10	11	12	13	14	15	16	17	18	19	20	21	22	23	24
1	1	1	1																								
2	2	2	2																								
3	3	3	3																								
4	4	4	4																								
5	5	5	5																								
6	6	6	6																								
7	7	7	7																								
8	8	8	8																								
9 - power supply	9	9 COM	9																								
10 + (COM) power supply	10	10 COM	10																								
11	11		11																								
12	12		12																								
13	13		13																								
14	14		14																								
15	15		15																								
16	16		16																								
17	17		17																								
18	18		18																								
19 - power supply	19 COM		19																								
20 + (COM) power supply	20 COM		20																								
			21																								
			22																								
			23																								
			24																								
			25 COM																								
			26 COM																								

* Please be aware that when the wiring method is T50/T50R, the polarity of COM will be + (plus).

Serial transmission (T6G1/T7*) wiring specifications

* Please fill in and attach to the manifold specifications for those other than the standard wiring or double wiring. (Available on a made to order basis)
* This is not required with standard wiring/double wiring.

Serial transmission	Connector pin No.		Valve No.															
	T6G1	**T7***	1	2	3	4	5	6	7	8	9	10	11	12	13	14	15	16
Connector T6G1: CC-Link 16 points	1	1																
	2	2																
	3	3																
	4	4																
	5	5																
	6	6																
	7	7																
	8	8																
	9	9																
	10 COM	10																
	11	11																
	12	12																
Thin slot-insertion T7D1: DeviceNet 16 points T7G1: CC-Link 16 points T7L1: SAVE NET 16 points T7S1:CompoNet 16 points (NPN) T7SP1:CompoNet 16 points (PNP)	13	13																
	14	14																
	15	15																
	16	16																
	17	17																
	18	18																
	19	19																
	20 COM	20																

Serial transmission (T8*) wiring specifications

* Please fill in and attach to the manifold specifications for those other than the standard wiring or double wiring. (Available on a made to order basis)
* This is not required with standard wiring/double wiring.

Serial transmission				Connector pin No.	Valve No.																						
				T8*	1	2	3	4	5	6	7	8	9	10	11	12	13	14	15	16	17	18	19	20	21	22	23	24
T8G1	CC-Link	NPN	16 points	1																								
T8G2			32 points	2																								
T8GP1		PNP	16 points	3																								
T8GP2			32 points	4																								
T8P1	PROFIBUS-DP	NPN	16 points	5																								
T8P2			32 points	6																								
T8PP1		PNP	16 points	7																								
T8PP2			32 points	8																								
T8EC1	EtherCAT	NPN	16 points	9																								
T8EC2			32 points	10																								
T8ECP1		PNP	16 points	11																								
T8ECP2			32 points	12																								
T8EN1	EtherNet/IP	NPN	16 points	13																								
T8EN2			32 points	14																								
T8ENP1		PNP	16 points	15																								
T8ENP2			32 points	16																								
T8D1	DeviceNet	NPN	16 points	17																								
T8D2			32 points	18																								
T8DP1		PNP	16 points	19																								
T8DP2			32 points	20																								
T8EB1	CC-Link IEF Basic	NPN	16 points	21																								
T8EB2			32 points	22																								
T8EBP1		PNP	16 points	23																								
T8EBP2			32 points	24																								
T8EP1	CC-Link IE Field	NPN	16 points	25																								
T8EP2			32 points	26																								
T8EPP1		PNP	16 points	27																								
T8EPP2			32 points	28																								
T8EP1	PROFINET	NPN	16 points	29																								
T8EP2			32 points	30																								
T8EPP1		PNP	16 points	31																								
T8EPP2			32 points	32																								
T8KC1	IO-Link	NPN	16 points																									
T8KC2			32 points																									
T8KCP1		PNP	16 points																									
T8KCP2			32 points																									

MEMO

Case example of wiring connection (recommended combination)

● Use with the combination below.

Wiring method	Cable application	Connection cable
D sub-connector (T30/T30R) 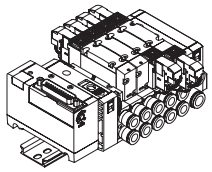	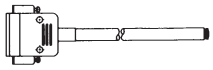	Cable with D sub-connector (Refer to page 717 for cable model No. and details.)
	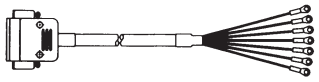	

*: Set the power supply voltage for valve activation by considering the voltage drop of the PLC and the flat cable.

SCPD3
SCM
SSD2
MDC2
SMG
LCM
LCR
LCG
LCX
STM
STG
STR2
MRL2
GRC
Cylinder switch
MN3E MN4E
4GA/B
M4GA/B
MN4GA/B
F.R (module unit)
Clean F.R
Precision R
Press gauge Diff. press gauge
Electro-pneumatic R
Speed controller
Auxiliary valve
Fitting/ tube
Clean air unit
Pressure sensor
Flow rate sensor
Valve for air blow
Ending

Common terminal block (wiring method T10)

Notes on wiring

[Precautions for common terminal box (T10)]

(1) With the common terminal block, common wires are treated inside beforehand.
When using the independent contact PLC output unit, lay the common wires at the contact section.
(2) Check the correspondence of the number of stations with solenoid positions to prevent incorrect wiring.
(Refer to the table below.)
(3) Note that the correspondence cannot be applied if the number of solenoid stations exceeds 16.
(4) The manifold station Nos. are set in order from left with the piping port facing forward.
(5) The voltage could drop because of simultaneous energizing or the cable length. Confirm that the voltage drop for the solenoid is within 10% of the rated voltage.

Internal wiring of wiring method T10 (up to 16 solenoid stations)

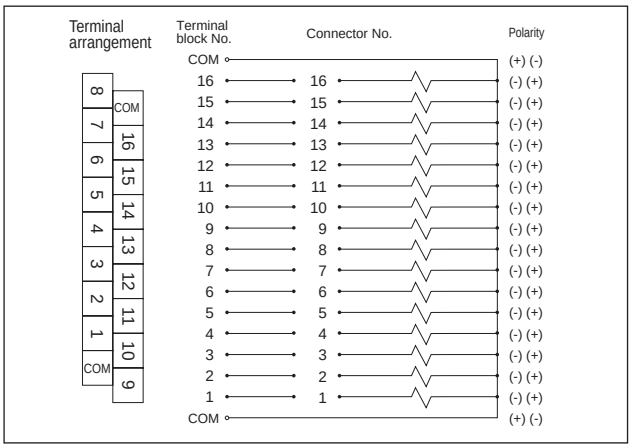

T10 (left side specifications)

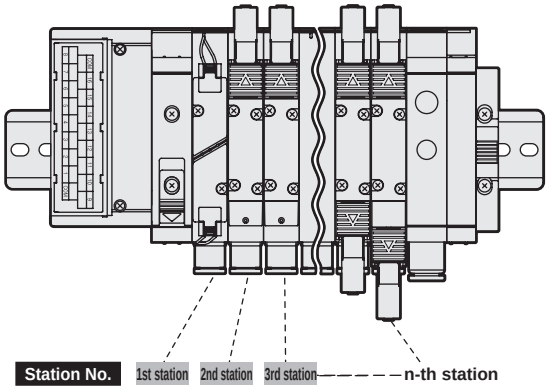

T10R (right side specifications)

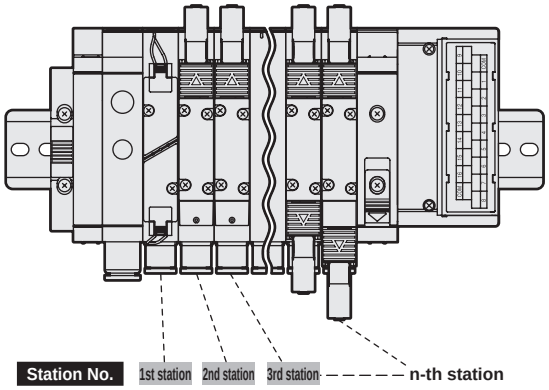

Terminal array of wiring method T10 (example)

*: The numbers in the valve No. 1a, 1b, 2a, 2b…and so forth indicate the 1st station and the 2nd station.
The alphabetic characters a and b indicate a side solenoid and b side solenoid.
Max. station No. differs depending on the model.
Check the individual specifications.

Terminal No.

COM	16	15	14	13	12	11	10	9
8	7	6	5	4	3	2	1	COM

[Standard wiring]

● Single solenoid valve

Terminal block No.	16	15	14	13	12	11	10	9
Valve No.	16a	15a	14a	13a	12a	11a	10a	9a
Terminal block No.	8	7	6	5	4	3	2	1
Valve No.	8a	7a	6a	5a	4a	3a	2a	1a

● For double solenoid valve

Terminal block No.	16	15	14	13	12	11	10	9
Valve No.	8b	8a	7b	7a	6b	6a	5b	5a
Terminal block No.	8	7	6	5	4	3	2	1
Valve No.	4b	4a	3b	3a	2b	2a	1b	1a

● Mix (single/double solenoid mixture)

Terminal block No.	16	15	14	13	12	11	10	9
Valve No.	11b	11a	10a	9a	8a	7b	7a	6a
Terminal block No.	8	7	6	5	4	3	2	1
Valve No.	5b	5a	4b	4a	3b	3a	2a	1a

[Double wiring]

Terminal block No.	16	15	14	13	12	11	10	9
Valve No.	(Void)	8a	(Void)	7a	(Void)	6a	(Void)	5a
Terminal block No.	8	7	6	5	4	3	2	1
Valve No.	(Void)	4a	(Void)	3a	(Void)	2a	(Void)	1a

Terminal block No.	16	15	14	13	12	11	10	9
Valve No.	8b	8a	7b	7a	6b	6a	5b	5a
Terminal block No.	8	7	6	5	4	3	2	1
Valve No.	4b	4a	3b	3a	2b	2a	1b	1a

Terminal block No.	16	15	14	13	12	11	10	9
Valve No.	(Void)	8a	7b	7a	(Void)	6a	5b	5a
Terminal block No.	8	7	6	5	4	3	2	1
Valve No.	4b	4a	3b	3a	(Void)	2a	(Void)	1a

Common terminal block (wiring method T11)

Notes on wiring

[Caution for common terminal block (T11)]

(1) With the common terminal block, common wires are treated inside beforehand.
When using the independent contact PLC output unit, lay the common wires at the contact section.
(2) Check the correspondence of the number of stations with solenoid positions to prevent incorrect wiring.
(Refer to the table below.)
(3) Note that the correspondence cannot be applied if the number of solenoid stations exceeds 24.
(4) The manifold station Nos. are set in order from left with the piping port facing forward.
(5) The voltage could drop because of simultaneous energizing or the cable length. Confirm that the voltage drop for the solenoid is within 10% of the rated voltage.

Internal wiring of wiring method T11 (up to 24 solenoid stations)

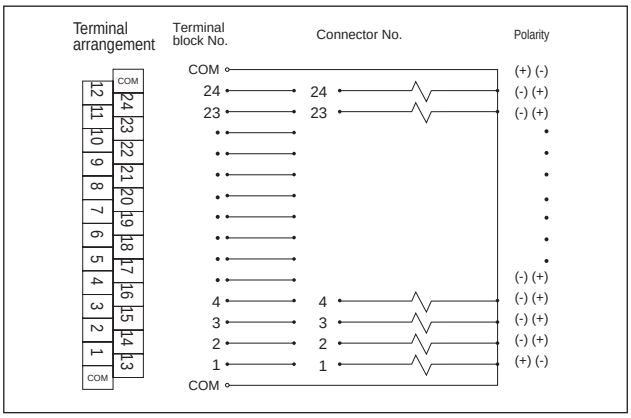

T11 (left side specifications)

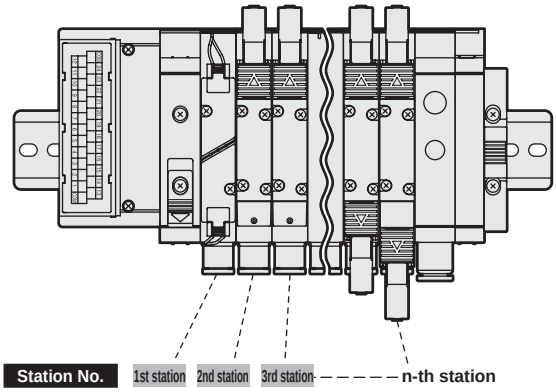

T11R (right side specifications)

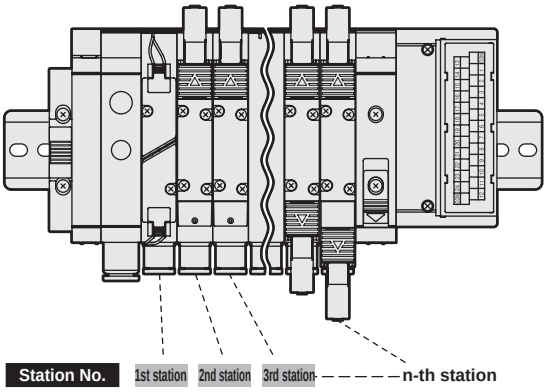

Terminal array of wiring method T11 (example)

*: The numbers in the valve No. 1a, 1b, 2a, 2b…and so forth indicate the 1st station and the 2nd station. The alphabetic characters a and b indicate a side solenoid and b side solenoid. Max. station No. differs depending on the model.
Check the individual specifications.

Terminal No.

COM	24	23	22	21	20	19	18	17	16	15	14	13	
12	11	10	9	8	7	6	5	4	3	2	1	COM	

[Standard wiring]

● Single solenoid valve

Terminal block No.	24	23	22	21	20	19	18	17	16	15	14	13
Valve No.	24a	23a	22a	21a	20a	19a	18a	17a	16a	15a	14a	13a
Terminal block No.	12	11	10	9	8	7	6	5	4	3	2	1
Valve No.	12a	11a	10a	9a	8a	7a	6a	5a	4a	3a	2a	1a

● For double solenoid valve

Terminal block No.	24	23	22	21	20	19	18	17	16	15	14	13
Valve No.	12b	12a	11b	11a	10b	10a	9b	9a	8b	8a	7b	7a
Terminal block No.	12	11	10	9	8	7	6	5	4	3	2	1
Valve No.	6b	6a	5b	5a	4b	4a	3b	3a	2b	2a	1b	1a

● Mix (single/double solenoid mixture)

Terminal block No.	24	23	22	21	20	19	18	17	16	15	14	13
Valve No.	18b	18a	17a	16a	15a	14a	13a	12b	12a	11b	11a	10a
Terminal block No.	12	11	10	9	8	7	6	5	4	3	2	1
Valve No.	9a	8a	7b	7a	6a	5a	4b	4a	3b	3a	2a	1a

[Double wiring]

● Single solenoid valve

Terminal block No.	24	23	22	21	20	19	18	17	16	15	14	13
Valve No.	(Void)	12a	(Void)	11a	(Void)	10a	(Void)	9a	(Void)	8a	(Void)	7a
Terminal block No.	12	11	10	9	8	7	6	5	4	3	2	1
Valve No.	(Void)	6a	(Void)	5a	(Void)	4a	(Void)	3a	(Void)	2a	(Void)	1a

● For double solenoid valve

Terminal block No.	24	23	22	21	20	19	18	17	16	15	14	13
Valve No.	12b	12a	11b	11a	10b	10a	9b	9a	8b	8a	7b	7a
Terminal block No.	12	11	10	9	8	7	6	5	4	3	2	1
Valve No.	6b	6a	5b	5a	4b	4a	3b	3a	2b	2a	1b	1a

● Mix (single/double solenoid mixture)

Terminal block No.	24	23	22	21	20	19	18	17	16	15	14	13
Valve No.	12b	12a	11b	11a	(Void)	10a	(Void)	9a	(Void)	8a	7b	7a
Terminal block No.	12	11	10	9	8	7	6	5	4	3	2	1
Valve No.	(Void)	6a	(Void)	5a	4b	4a	3b	3a	(Void)	2a	(Void)	1a

SCPD3
SCM
SSD2
MDC2
SMG
LCM
LCR
LCG
LCX
STM
STG
STR2
MRL2
GRC
Cylinder switch
MN3E MN4E
4GA/B
M4GA/B
MN4GA/B
F.R (module unit)
Clean F.R
Precision R
Press gauge Diff. press gauge
Electro-pneumatic R
Speed controller
Auxiliary valve
Fitting/ tube
Clean air unit
Pressure sensor
Flow rate sensor
Valve for air blow
Ending

D-sub connector: Wiring method T30

T30 connector

Connectors used for T30 wiring, called a D sub-connector, is used widely for FA and OA devices. The 25P is an RS-232-C Standards designated connector especially used for personal computer communication. The manifold station Nos. are set in order from left with the piping port facing forward.

T30 (left side specifications)

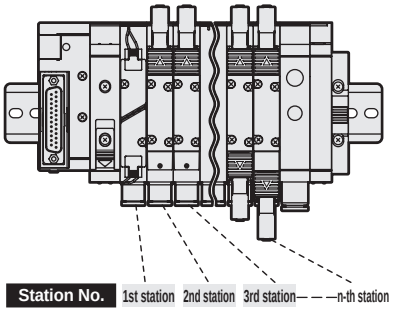

T30R (right side specifications)

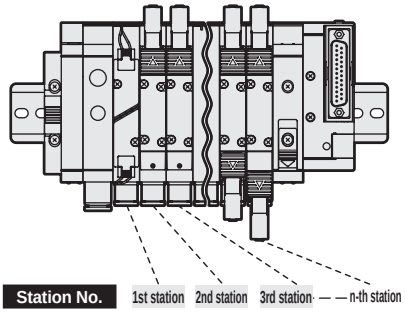

Precautions for connector T30

(1) Signal arrays of the PLC output unit must match signal arrays of the valve side.
(2) The working power is 12/24 VDC dedicated.
(3) The voltage could drop because of simultaneous energizing or the cable length. Confirm that the voltage drop for the solenoid is within 10% of the rated voltage.

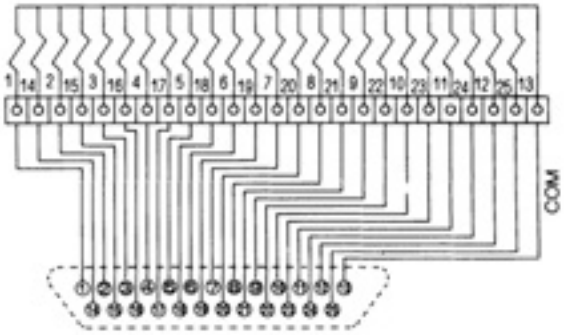

T30 connector pin array (example)

*1: The numbers in the valve No. 1a, 1b, 2a, 2b… and so forth indicate the 1st station and the 2nd station. The alphabetic characters a and b indicate a side solenoid and b side solenoid.
Max. station No. differs depending on the model.
Check the individual specifications.

Connector pin No.

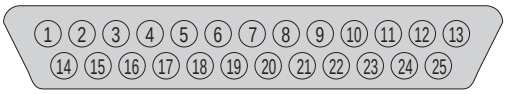

[Standard wiring]

● For single solenoid valve

Pin No.	1	2	3	4	5	6	7	8	9	10	11	12	13
Valve No.	1a	3a	5a	7a	9a	11a	13a	15a	17a	19a	21a	23a	COM
Pin No.	14	15	16	17	18	19	20	21	22	23	24	25	
Valve No.	2a	4a	6a	8a	10a	12a	14a	16a	18a	20a	22a	24a	

● For double solenoid valve

Pin No.	1	2	3	4	5	6	7	8	9	10	11	12	13
Valve No.	1a	2a	3a	4a	5a	6a	7a	8a	9a	10a	11a	12a	COM
Pin No.	14	15	16	17	18	19	20	21	22	23	24	25	
Valve No.	1b	2b	3b	4b	5b	6b	7b	8b	9b	10b	11b	12b	

● Mix (single/double solenoid mixture)

Pin No.	1	2	3	4	5	6	7	8	9	10	11	12	13
Valve No.	1a	3a	4a	5a	7a	8a	10a	11b	12b	14a	15b	17a	COM
Pin No.	14	15	16	17	18	19	20	21	22	23	24	25	
Valve No.	2a	3b	4b	6a	7b	9a	11a	12a	13a	15a	16a	17b	

[Double wiring]

● For single solenoid valve

Pin No.	1	2	3	4	5	6	7	8	9	10	11	12	13
Valve No.	1a	2a	3a	4a	5a	6a	7a	8a	9a	10a	11a	12a	COM
Pin No.	14	15	16	17	18	19	20	21	22	23	24	25	
Valve No.	(Void)	(Void)	(Void)	(Void)	(Void)	(Void)	(Void)	(Void)	(Void)	(Void)	(Void)	(Void)	

● For double solenoid valve

Pin No.	1	2	3	4	5	6	7	8	9	10	11	12	13
Valve No.	1a	2a	3a	4a	5a	6a	7a	8a	9a	10a	11a	12a	COM
Pin No.	14	15	16	17	18	19	20	21	22	23	24	25	
Valve No.	1b	2b	3b	4b	5b	6b	7b	8b	9b	10b	11b	12b	

● Mix (single/double solenoid mixture)

Pin No.	1	2	3	4	5	6	7	8	9	10	11	12	13
Valve No.	1a	2a	3a	4a	5a	6a	7a	8a	9a	10a	11a	12a	COM
Pin No.	14	15	16	17	18	19	20	21	22	23	24	25	
Valve No.	(Void)	(Void)	3b	4b	(Void)	(Void)	7b	(Void)	(Void)	(Void)	11b	12b	

How to order

Cable with D sub-connector model No.

4GR - CABLE - D 0 0 - 1 - P70

- P70: Clean room specifications
- 0: Ⓐ User interface
- 1: Ⓑ Cable length

* Each model of pneumatic valves
Available for D sub-connector T30/T31

Code	Content	Model No. 4GR
Ⓐ User interface		
0	Cutting only	●
1	With round terminal for M3.5 screw	●
Ⓑ Cable length		
1	1 m	●
3	3 m	●
5	5 m	●

D sub-connector terminal No. and conductor

● 4GR-CABLE-D00-Ⓑ-P70

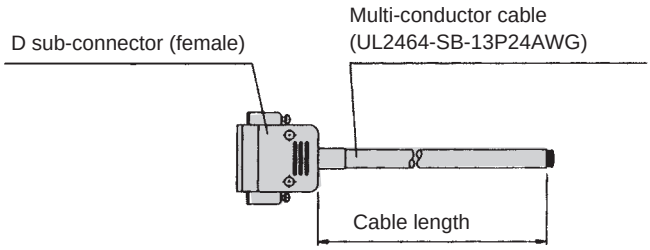

D sub-connector terminal No.		1	2	3	4	5	6	7	8	9	10	11	12	13
Conductor	Insulator color	Orange	Orange	Yellow	Yellow	Green	Green	Gray	Gray	White	White	Orange	Orange	Yellow
	Mark type	1 point	1 point	1 point	1 point	1 point	1 point	1 point	1 point	1 point	1 point	2 point	2 point	2 point
	Mark color	Black	Red	Black	Red	Black	Red	Black	Red	Black	Red	Black	Red	Black
D sub-connector terminal No.		14	15	16	17	18	19	20	21	22	23	24	25	
Conductor	Insulator color	Yellow	Green	Green	Gray	Gray	White	White	Orange	Orange	Yellow	Yellow	Green	
	Mark type	2 point	2 point	2 point	2 point	2 point	2 point	2 point	3 point	3 point	3 point	3 point	3 point	
	Mark color	Red	Black	Red	Black	Red	Black	Red	Black	Red	Black	Red	Black	

● 4GR-CABLE-D01-Ⓑ-P70

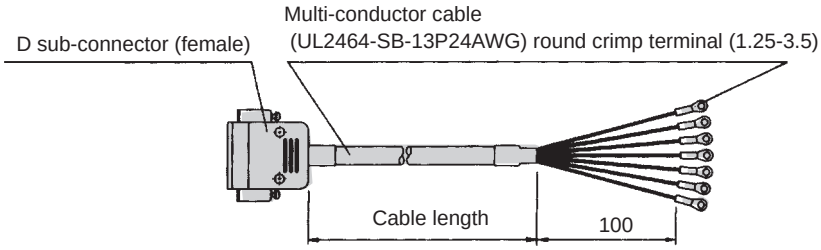

D sub-connector terminal No.		1	2	3	4	5	6	7	8	9	10	11	12	13
Conductor	Insulator color	Orange	Orange	Yellow	Yellow	Green	Green	Gray	Gray	White	White	Orange	Orange	Yellow
	Mark type	1 point	1 point	1 point	1 point	1 point	1 point	1 point	1 point	1 point	1 point	2 point	2 point	2 point
	Mark color	Black	Red	Black	Red	Black	Red	Black	Red	Black	Red	Black	Red	Black
Mark tube No.		1	2	3	4	5	6	7	8	9	10	11	12	13
D sub-connector terminal No.		14	15	16	17	18	19	20	21	22	23	24	25	
Conductor	Insulator color	Yellow	Green	Green	Gray	Gray	White	White	Orange	Orange	Yellow	Yellow	Green	
	Mark type	2 point	2 point	2 point	2 point	2 point	2 point	2 point	3 point	3 point	3 point	3 point	3 point	
	Mark color	Red	Black	Red	Black	Red	Black	Red	Black	Red	Black	Red	Black	
Mark tube No.		14	15	16	17	18	19	20	21	22	23	24	25	

* Can be used up to 24 points. Cut the wires for surplus points before use.

SCPD3
SCM
SSD2
MDC2
SMG
LCM
LCR
LCG
LCX
STM
STG
STR2
MRL2
GRC
Cylinder switch
MN3E MN4E
4GA/B
M4GA/B
MN4GA/B
F.R (module unit)
Clean F.R
Precision R
Press gauge Diff. press gauge
Electro-pneumatic R
Speed controller
Auxiliary valve
Fitting/ tube
Clean air unit
Pressure sensor
Flow rate sensor
Valve for air blow
Ending

Flat cable connector: wiring method T50

T50 connector

The connector used for T50 wiring method complies with MIL Standards (MIL-C-83503). Wiring work is simplified with the pressure welded flat cable.
Pin No. is assigned differently based on the PLC maker, but the function assignment is the same.
Layout using connectors and the triangular mark (▼) shown below as a reference. The ▼ mark is the reference for both the plug and socket. The manifold station Nos. are set in order from left with b side solenoid side (cap side for single) facing forward.

T50 (left side specifications)

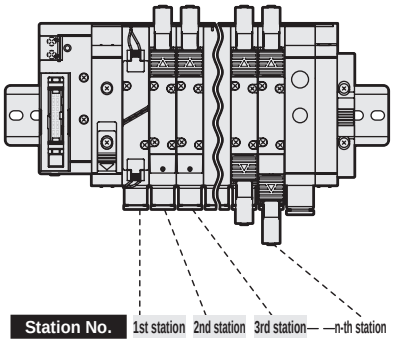

T50R (right side specifications)

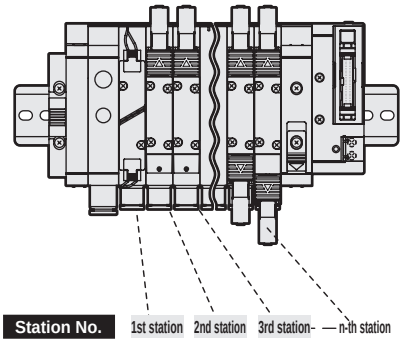

Precautions for connector T50

(1) Signal arrays of the PLC output unit must match signal arrays of the valve side. Direct connections with the PLC are limited. Use the dedicated cable for each PLC manufacturer.
(2) The working power is 12/24 VDC dedicated.
(3) When connecting the T50 to a general output unit, use the + terminal (20, 10) of the 20P connector as the + side common, and use the NPN transistor output open collector for the drive circuit.
(4) Do not connect this manifold to the input unit as major faults could occur in this device and in peripherals. Connect this manifold to the output unit.
(5) The voltage could drop because of simultaneous energizing or the cable length. Confirm that the voltage drop for the solenoid is within 10% of the rated voltage.

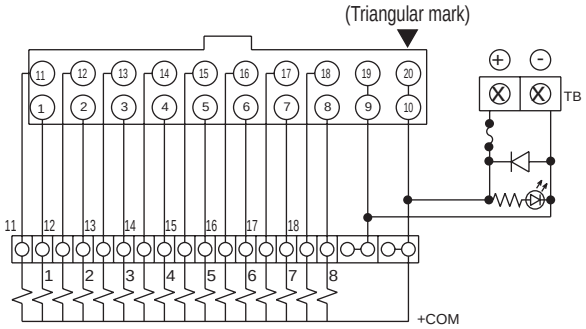

T50 connector pin array (example)

*1: The numbers in the valve No. 1a, 1b, 2a, 2b… and so forth indicate the 1st station and the 2nd station. The alphabetic characters a and b indicate a side solenoid and b side solenoid. Max. station No. differs depending on the model. Check the individual specifications.

Connector pin No.

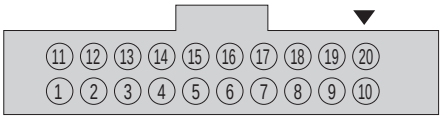

[Standard wiring]

● For single solenoid valve

Pin No.	11	12	13	14	15	16	17	18	19	20
Valve No.	9a	10a	11a	12a	13a	14a	15a	16a	-power supply	+power supply
Pin No.	1	2	3	4	5	6	7	8	9	10
Valve No.	1a	2a	3a	4a	5a	6a	7a	8a	-power supply	+power supply

● For double solenoid valve

Pin No.	11	12	13	14	15	16	17	18	19	20
Valve No.	5a	5b	6a	6b	7a	7b	8a	8b	-power supply	+power supply
Pin No.	1	2	3	4	5	6	7	8	9	10
Valve No.	1a	1b	2a	2b	3a	3b	4a	4b	-power supply	+power supply

● Mix (single/double solenoid mixture)

Pin No.	11	12	13	14	15	16	17	18	19	20
Valve No.	7a	7b	8a	9a	10a	10b	11a	11b	-power supply	+power supply
Pin No.	1	2	3	4	5	6	7	8	9	10
Valve No.	1a	2a	3a	3b	4a	4b	5a	6a	-power supply	+power supply

[Double wiring]

Pin No.	11	12	13	14	15	16	17	18	19	20
Valve No.	5a	(Void)	6a	(Void)	7a	(Void)	8a	(Void)	-power supply	+power supply
Pin No.	1	2	3	4	5	6	7	8	9	10
Valve No.	1a	(Void)	2a	(Void)	3a	(Void)	4a	(Void)	-power supply	+power supply

Pin No.	11	12	13	14	15	16	17	18	19	20
Valve No.	5a	5b	6a	6b	7a	7b	8a	8b	-power supply	+power supply
Pin No.	1	2	3	4	5	6	7	8	9	10
Valve No.	1a	1b	2a	2b	3a	3b	4a	4b	-power supply	+power supply

Pin No.	11	12	13	14	15	16	17	18	19	20
Valve No.	5a	(Void)	6a	(Void)	7a	7b	8a	(Void)	-power supply	+power supply
Pin No.	1	2	3	4	5	6	7	8	9	10
Valve No.	1a	(Void)	2a	(Void)	3a	3b	4a	4b	-power supply	+power supply

Flat cable connector: wiring method T51

T51 connector

The connector used for T51 wiring method complies with MIL Standards (MIL-C-83503). Wiring work is simplified with the pressure welded flat cable.
Pin Nos. are assigned differently based on the PLC maker, but the function assignment is the same. Layout using connectors and the triangular mark (▼) shown below as a reference. The (▼) mark is the reference for both the plug and socket. The manifold station Nos. are set in order from left with b side solenoid (cap for single) facing forward.

T51 (left side specifications)

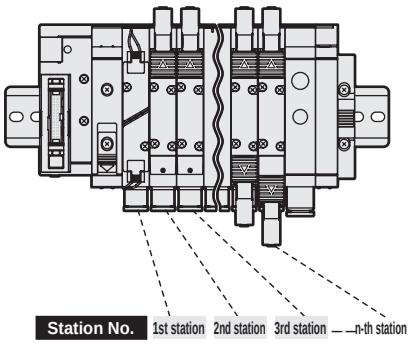

T51R (right side specifications)

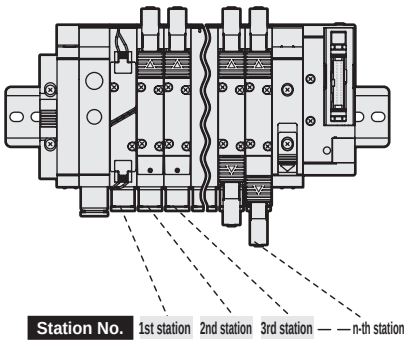

Precautions for connector (T51)

(1) Signal arrays of the PLC output unit must match signal arrays of the valve side.
(2) The working power is 12/24 VDC dedicated.
(3) The T51 is driven with a general output unit.
(4) Do not connect this manifold to the input unit as major faults could occur in this device and in peripherals. Connect this manifold to the output unit.
(5) The voltage could drop because of simultaneous energizing or the cable length. Confirm that the voltage drop for the solenoid is within 10% of the rated voltage.

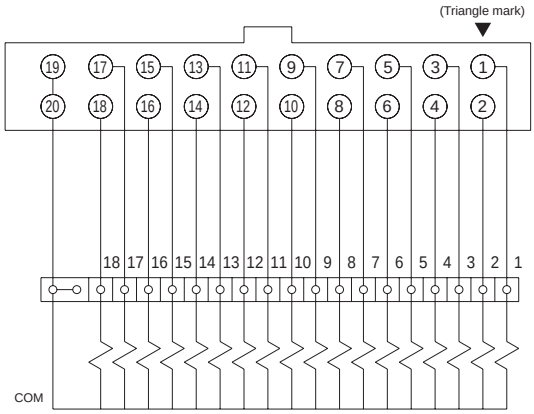

T51 connector pin array (example)

*: The numbers in the valve No. 1a, 1b, 2a, 2b…and so forth indicate the 1st station and the 2nd station. The alphabetic characters a and b indicate a side solenoid and b side solenoid. Max. station number differs depending on the model No. Check the individual specifications.

Connector pin No.

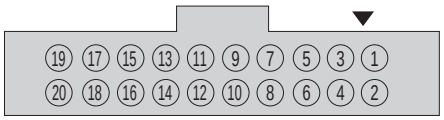

[Standard wiring]

● For single solenoid valve

Pin No.	19	17	15	13	11	9	7	5	3	1
Valve No.	COM	17a	15a	13a	11a	9a	7a	5a	3a	1a
Pin No.	20	18	16	14	12	10	8	6	4	2
Valve No.	COM	18a	16a	14a	12a	10a	8a	6a	4a	2a

● For double solenoid valve

Pin No.	19	17	15	13	11	9	7	5	3	1
Valve No.	COM	9a	8a	7a	6a	5a	4a	3a	2a	1a
Pin No.	20	18	16	14	12	10	8	6	4	2
Valve No.	COM	9b	8b	7b	6b	5b	4b	3b	2b	1b

● Mix (single/double solenoid mixture)

Pin No.	19	17	15	13	11	9	7	5	3	1
Valve No.	COM	12a	11a	10a	8a	7a	5a	4a	3a	1a
Pin No.	20	18	16	14	12	10	8	6	4	2
Valve No.	COM	13a	11b	10b	9a	7b	6a	4b	3b	2a

[Double wiring]

● For single solenoid valve

Pin No.	19	17	15	13	11	9	7	5	3	1
Valve No.	COM	9a	8a	7a	6a	5a	4a	3a	2a	1a
Pin No.	20	18	16	14	12	10	8	6	4	2
Valve No.	COM	(Void)	(Void)	(Void)	(Void)	(Void)	(Void)	(Void)	(Void)	(Void)

● For double solenoid valve

Pin No.	19	17	15	13	11	9	7	5	3	1
Valve No.	COM	9a	8a	7a	6a	5a	4a	3a	2a	1a
Pin No.	20	18	16	14	12	10	8	6	4	2
Valve No.	COM	9b	8b	7b	6b	5b	4b	3b	2b	1b

● Mix (single/double solenoid mixture)

Pin No.	19	17	15	13	11	9	7	5	3	1
Valve No.	COM	9a	8a	7a	6a	5a	4a	3a	2a	1a
Pin No.	20	18	16	14	12	10	8	6	4	2
Valve No.	COM	(Void)	(Void)	7b	(Void)	(Void)	4b	3b	(Void)	(Void)

Flat cable connector: wiring method T52

T52 connector

The connector used for T52 wiring method complies with MIL Standards (MIL-C-83503).
Wiring work is simplified with the pressure welded flat cable.
Pin Nos. are assigned differently based on the PLC maker, but the function assignment is the same. Layout using connectors and the triangular mark (▼) shown below as a reference. The (▼) mark is the reference for both the plug and socket.
The manifold station Nos. are set in order from left with b side solenoid (cap for single) facing forward.

Precautions for connector (T52)

(1) Signal arrays of the PLC output unit must match signal arrays of the valve side.
(2) The working power is 12/24 VDC dedicated.
(3) The T52 is driven with a general output unit.
(4) Do not connect this manifold to the input unit as major faults could occur in this device and in peripherals. Connect this manifold to the output unit.
(5) The voltage could drop because of simultaneous energizing or the cable length. Confirm that the voltage drop for the solenoid is within 10% of the rated voltage.

Connector pin layout diagram (top view) and internal circuit diagram

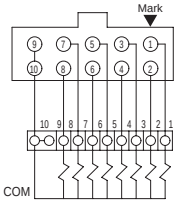

T52 (left side specifications)

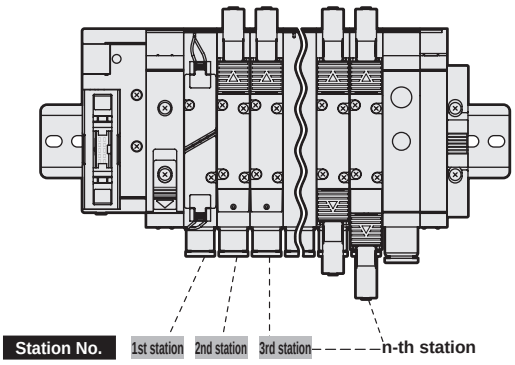

T52R (right side specifications)

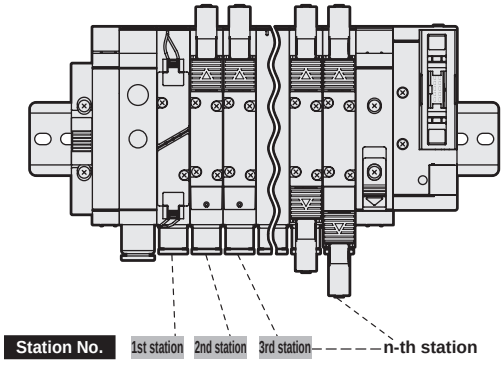

T52 connector pin array (example)

*: The numbers in the valve No. 1a, 1b, 2a, 2b…and so forth indicate the 1st station and the 2nd station. The alphabetic characters a and b indicate a side solenoid and b side solenoid.
Max. station number differs depending on the model No. Check the individual specifications.

Connector pin No.

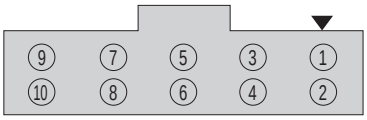

[Standard wiring]

● For single solenoid valve

Pin No.	9	7	5	3	1
Valve No.	COM	7a	5a	3a	1a
Pin No.	10	8	6	4	2
Valve No.	COM	8a	6a	4a	2a

● For double solenoid valve

Pin No.	9	7	5	3	1
Valve No.	COM	4a	3a	2a	1a
Pin No.	10	8	6	4	2
Valve No.	COM	4b	3b	2b	1b

● For mixed use (single/double solenoid mixture)

Pin No.	9	7	5	3	1
Valve No.	COM	5b	4b	3a	1a
Pin No.	10	8	6	4	2
Valve No.	COM	6a	5a	4a	2a

[Double wiring]

Pin No.	9	7	5	3	1
Valve No.	COM	4a	3a	2a	1a
Pin No.	10	8	6	4	2
Valve No.	COM	(Void)	(Void)	(Void)	(Void)

Pin No.	9	7	5	3	1
Valve No.	COM	4a	3a	2a	1a
Pin No.	10	8	6	4	2
Valve No.	COM	4b	3b	2b	1b

Pin No.	9	7	5	3	1
Valve No.	COM	4a	3a	2a	1a
Pin No.	10	8	6	4	2
Valve No.	COM	4b	(Void)	(Void)	(Void)

Flat cable connector: wiring method T53

T53 connector

The connector used for T53 wiring method complies with MIL Standards (MIL-C-83503).
Wiring work is simplified with the pressure welded flat cable.
Pin Nos. are assigned differently based on the PLC maker, but the function assignment is the same. Layout using connectors and the triangular mark (▼) shown below as a reference. The (▼) mark is the reference for both the plug and socket.
The manifold station Nos. are set in order from left with b side solenoid (cap for single) facing forward.

Connector pin layout diagram (top view) and internal circuit diagram

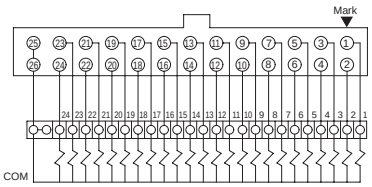

Precautions for connector (T53)

(1) Signal arrays of the PLC output unit must match signal arrays of the valve side.
(2) The working power is 12/24 VDC dedicated.
(3) The T53 is driven with a general output unit.
(4) Do not connect this manifold to the input unit as major faults could occur in this device and in peripherals. Connect this manifold to the output unit.
(5) The voltage could drop because of simultaneous energizing or the cable length. Confirm that the voltage drop for the solenoid is within 10% of the rated voltage.

T53 (left side specifications)

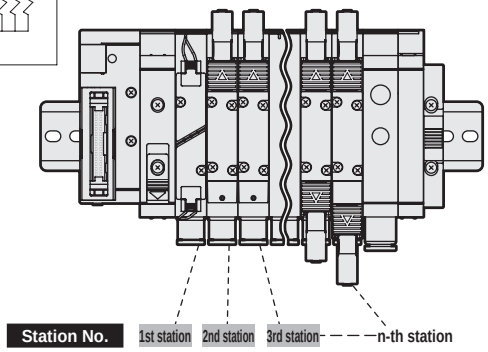

T53R (right side specifications)

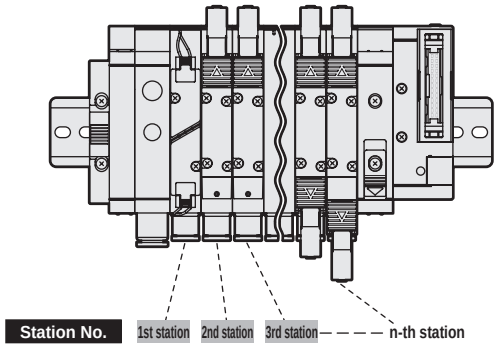

T53 connector pin array (example)

*: The numbers in the valve No. 1a, 1b, 2a, 2b…and so forth indicate the 1st station and the 2nd station. The alphabetic characters a and b indicate a side solenoid and b side solenoid.
Max. station number differs depending on the model No. Check the individual specifications.

Connector pin No.

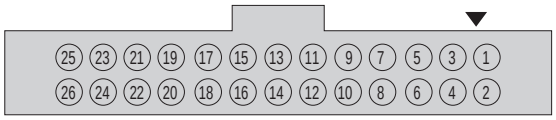

[Standard wiring]

● Single solenoid valve

Pin No.	25	23	21	19	17	15	13	11	9	7	5	3	1
Valve No.	COM	23a	21a	19a	17a	15a	13a	11a	9a	7a	5a	3a	1a
Pin No.	26	24	22	20	18	16	14	12	10	8	6	4	2
Valve No.	COM	24a	22a	20a	18a	16a	14a	12a	10a	8a	6a	4a	2a

● For double solenoid valve

Pin No.	25	23	21	19	17	15	13	11	9	7	5	3	1
Valve No.	COM	12a	11a	10a	9a	8a	7a	6a	5a	4a	3a	2a	1a
Pin No.	26	24	22	20	18	16	14	12	10	8	6	4	2
Valve No.	COM	12b	11b	10b	9b	8b	7b	6b	5b	4b	3b	2b	1b

● For mixed use (single/double solenoid mixture)

Pin No.	25	23	21	19	17	15	13	11	9	7	5	3	1
Valve No.	COM	16a	15a	14a	12a	10a	9a	8a	7a	5b	4b	3a	1a
Pin No.	26	24	22	20	18	16	14	12	10	8	6	4	2
Valve No.	COM	16b	15b	14b	13a	11a	9b	8b	7b	6a	5a	4a	2a

[Double wiring]

Pin No.	25	23	21	19	17	15	13	11	9	7	5	3	1
Valve No.	COM	12a	11a	10a	9a	8a	7a	6a	5a	4a	3a	2a	1a
Pin No.	26	24	22	20	18	16	14	12	10	8	6	4	2
Valve No.	COM	(Void)	(Void)	(Void)	(Void)	(Void)	(Void)	(Void)	(Void)	(Void)	(Void)	(Void)	(Void)

Pin No.	25	23	21	19	17	15	13	11	9	7	5	3	1
Valve No.	COM	12a	11a	10a	9a	8a	7a	6a	5a	4a	3a	2a	1a
Pin No.	26	24	22	20	18	16	14	12	10	8	6	4	2
Valve No.	COM	12b	11b	10b	9b	8b	7b	6b	5b	4b	3b	2b	1b

Pin No.	25	23	21	19	17	15	13	11	9	7	5	3	1
Valve No.	COM	12a	11a	10a	9a	8a	7a	6a	5a	4a	3a	2a	1a
Pin No.	26	24	22	20	18	16	14	12	10	8	6	4	2
Valve No.	COM	(Void)	(Void)	(Void)	9b	8b	7b	(Void)	5b	4b	(Void)	(Void)	(Void)

SCPD3
SCM
SSD2
MDC2
SMG
LCM
LCR
LCG
LCX
STM
STG
STR2
MRL2
GRC
Cylinder switch
MN3E MN4E
4GA/B
M4GA/B
MN4GA/B
F.R (module unit)
Clean F.R
Precision R
Press gauge Diff. press gauge
Electro-pneumatic R
Speed controller
Auxiliary valve
Fitting/ tube
Clean air unit
Pressure sensor
Flow rate sensor
Valve for air blow
Ending

Serial transmission: (Wiring method T6G1)

T6G1 Serial transmission

- The slave unit's output No. differs with the manufacturer. The connector pin No. and the manifold solenoid correspond as shown below.
- Station manifolds are set in order from the left with the piping port facing forward regardless of the wiring block position.
- Internal connectors are wired in order, so there may be some void numbers depending on the number of stations. These void outputs cannot be used for drive other than the solenoid manifold in use.
- The working power is 24 VDC.
- A slave unit for each communication system is used. Contact CKD for the specifications on the usable PLC model Nos., master unit model Nos. and communication systems.
- Output No. is assigned differently based on the PLC maker, but the function assignment is the same. Layout using connectors and the triangular mark (▼) shown below as a reference. The ▼ mark is the reference for both the plug and socket.

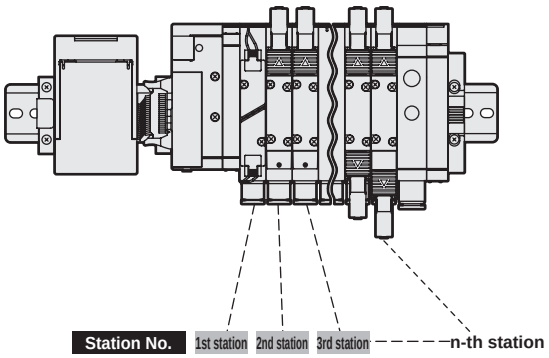

Combination of output No. and connector pin No.

● T6G1

Output No.	0	1	2	3	4	5	6	7	8	9	A	B	C	D	E	F
Connector pin No.	1	2	3	4	5	6	7	8	11	12	13	14	15	16	17	18

T6G1 connector pin array (example)

*: The numbers in the valve No. 1a, 1b, 2a, 2b…and so forth indicate the 1st station and the 2nd station. The alphabetic characters a and b indicate a side solenoid and b side solenoid.
Max. station number differs depending on the model No. Check the individual specifications.

Connector pin No.

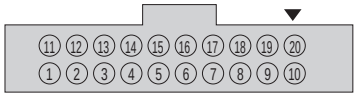

[Standard wiring]

● For single solenoid valve

Pin No.	11	12	13	14	15	16	17	18	19	20
Valve No.	9a	10a	11a	12a	13a	14a	15a	16a	(Void)	+COM
Pin No.	1	2	3	4	5	6	7	8	9	10
Valve No.	1a	2a	3a	4a	5a	6a	7a	8a	(Void)	+COM

● For double solenoid valve

Pin No.	11	12	13	14	15	16	17	18	19	20
Valve No.	5a	5b	6a	6b	7a	7b	8a	8b	(Void)	+COM
Pin No.	1	2	3	4	5	6	7	8	9	10
Valve No.	1a	1b	2a	2b	3a	3b	4a	4b	(Void)	+COM

● Mix (single/double solenoid combination)

Pin No.	11	12	13	14	15	16	17	18	19	20
Valve No.	7a	7b	8a	9a	10a	10b	11a	11b	(Void)	+COM
Pin No.	1	2	3	4	5	6	7	8	9	10
Valve No.	1a	2a	3a	3b	4a	4b	5a	6a	(Void)	+COM

[Double wiring]

Pin No.	11	12	13	14	15	16	17	18	19	20
Valve No.	5a	(Void)	6a	(Void)	7a	(Void)	8a	(Void)	(Void)	+COM
Pin No.	1	2	3	4	5	6	7	8	9	10
Valve No.	1a	(Void)	2a	(Void)	3a	(Void)	4a	(Void)	(Void)	+COM

Pin No.	11	12	13	14	15	16	17	18	19	20
Valve No.	5a	5b	6a	6b	7a	7b	8a	8b	(Void)	+COM
Pin No.	1	2	3	4	5	6	7	8	9	10
Valve No.	1a	1b	2a	2b	3a	3b	4a	4b	(Void)	+COM

Pin No.	11	12	13	14	15	16	17	18	19	20
Valve No.	5a	(Void)	6a	(Void)	7a	7b	8a	(Void)	(Void)	+COM
Pin No.	1	2	3	4	5	6	7	8	9	10
Valve No.	1a	(Void)	2a	(Void)	3a	3b	4a	4b	(Void)	+COM

* Do not use the position marked (Void).

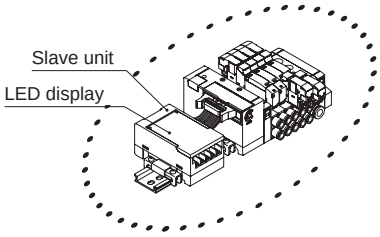

	LED display	Wiring method
T6G1	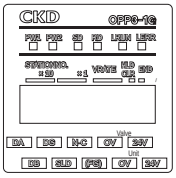	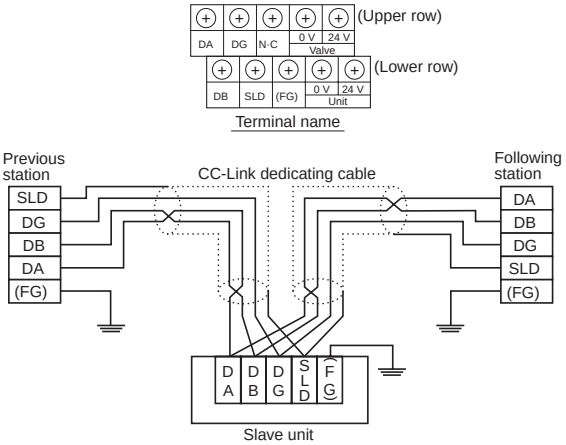

LED name	Display description
PW1	Lights when unit power is ON.
PW2	Lights when valve power is ON.
SD	Turns on when sending data.
RD	Turns on when receiving data.
L RUN	Lights when receiving normal data, and turns OFF at time over.
L ERR	Lights when transmission error occurs. Turns off when the time limit is exceeded. Lights when station No. setting or transmission speed setting is incorrect. Blinks when station No. setting or transmission speed setting changes midway.

SCPD3
SCM
SSD2
MDC2
SMG
LCM
LCR
LCG
LCX
STM
STG
STR2
MRL2
GRC
Cylinder switch
MN3E MN4E
4GA/B
M4GA/B
MN4GA/B
F.R (module unit)
Clean F.R
Precision R
Press gauge Diff. press gauge
Electro-pneumatic R
Speed controller
Auxiliary valve
Fitting/ tube
Clean air unit
Pressure sensor
Flow rate sensor
Valve for air blow
Ending

Serial transmission: Wiring method

T7 *serial transmission

- The slave unit's output No. is different with each manufacturer. The internal connector pin No. and the manifold solenoid correspond as shown below.
- Station manifolds are set in order from the left with the piping port facing forward regardless of the wiring block position.
- Internal connectors are wired in order, so there may be some void numbers depending on the number of stations. These void outputs cannot be used for drive other than the solenoid manifold in use.
- The working power is 24 VDC.
- A slave unit for each communication system is used. Contact CKD for the specifications on the usable PLC model Nos., master unit model Nos. and communication systems.
- Securely fix the enclosed connector with set screw. (Proper tightening torque 0.3 N·m)

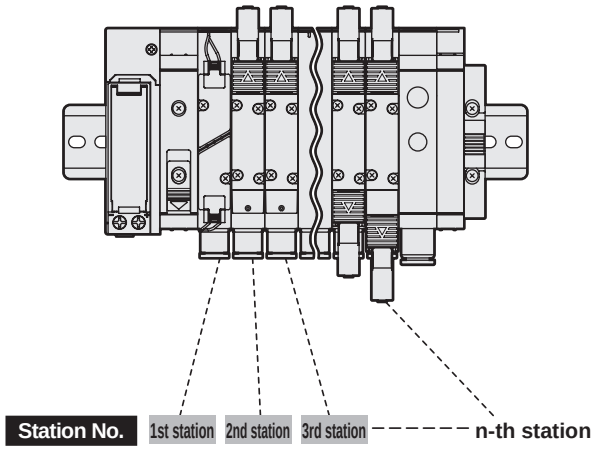

Internal circuit board connector pin No.

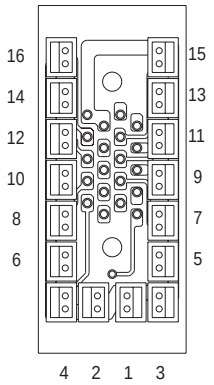

Combination of output No. and connector pin No.

● T7D1, T7L1, T7S□1

Output No.	0	1	2	3	4	5	6	7	8	9	10	11	12	13	14	15
Connector pin No.	1	2	3	4	5	6	7	8	9	10	11	12	13	14	15	16

● T7G1

Output No.	0	1	2	3	4	5	6	7	8	9	A	B	C	D	E	F
Connector pin No.	1	2	3	4	5	6	7	8	9	10	11	12	13	14	15	16

T7* connector pin array (example)

*: The numbers in the valve No. 1a, 1b, 2a, 2b…and so forth indicate the first station and 2nd station. The alphabetic characters a and b indicate the a side solenoid and the b side solenoid.
Max. station number differs depending on the model No. Check the individual specifications.

[Standard wiring]

● For single solenoid valve

Pin No.	1	2	3	4	5	6	7	8	9	10	11	12	13	14	15	16
Valve No.	1a	2a	3a	4a	5a	6a	7a	8a	9a	10a	11a	12a	13a	14a	15a	16a

● For double solenoid valve

Pin No.	1	2	3	4	5	6	7	8	9	10	11	12	13	14	15	16
Valve No.	1a	1b	2a	2b	3a	3b	4a	4b	5a	5b	6a	6b	7a	7b	8a	8b

● For mixed use (single/double solenoid mixture)

Pin No.	1	2	3	4	5	6	7	8	9	10	11	12	13	14	15	16
Valve No.	1a	2a	3a	3b	4a	4b	5a	6a	7a	7b	8a	9a	10a	10b	11a	11b

[Double wiring]

Pin No.	1	2	3	4	5	6	7	8	9	10	11	12	13	14	15	16
Valve No.	1a	(Void)	2a	(Void)	3a	(Void)	4a	(Void)	5a	(Void)	6a	(Void)	7a	(Void)	8a	(Void)

Pin No.	1	2	3	4	5	6	7	8	9	10	11	12	13	14	15	16
Valve No.	1a	1b	2a	2b	3a	3b	4a	4b	5a	5b	6a	6b	7a	7b	8a	8b

Pin No.	1	2	3	4	5	6	7	8	9	10	11	12	13	14	15	16
Valve No.	1a	(Void)	2a	(Void)	3a	3b	4a	4b	5a	(Void)	6a	(Void)	7a	7b	8a	(Void)

* Do not use the position marked with (Void).

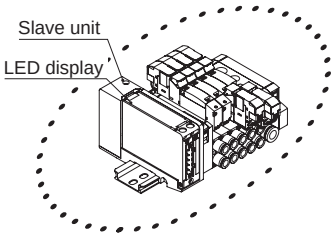

Model No.	LED display	Wiring method

T7D1

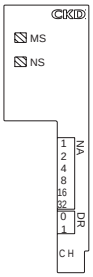

LED name	Display description
MS	Slave status is indicated with green and red LEDs. Errors are indicated using combination with "NS LED".
NS	Network status is indicated with green and red LEDs. Errors are indicated using combination with "MS LED".

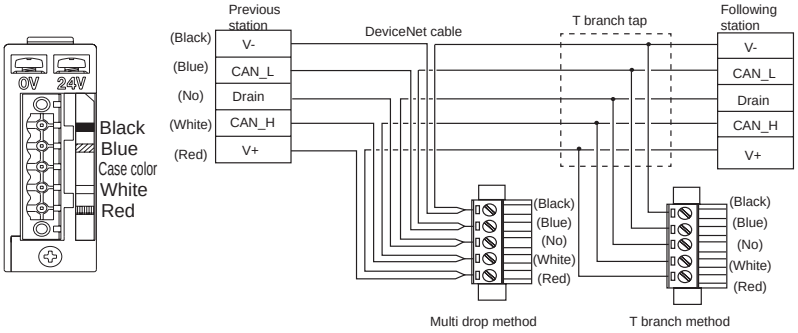

- Power supply line is connected to the terminal box.
- DeviceNet cable is connected to the connector.
- The power terminal box (24 V, 0 V) is insulated from the communication power terminal (V+, V-).
- Power supply for an unit and a valve is a common terminal.
- The wiring section connectors are enclosed.

T7G1

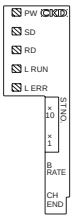

LED name	Display description
PW	Lights when power is ON.
SD	Lights when transmitting data.
RD	Lights when receiving data.
L RUN	Lights when receiving normal data. Turns OFF when time over occurs.
L ERR	Lights when transmission error occurs. Turns OFF when time over occurs. Lights when station No. or transmission speed setting fails. Blinks when station No. or transmission speed in setting changes.

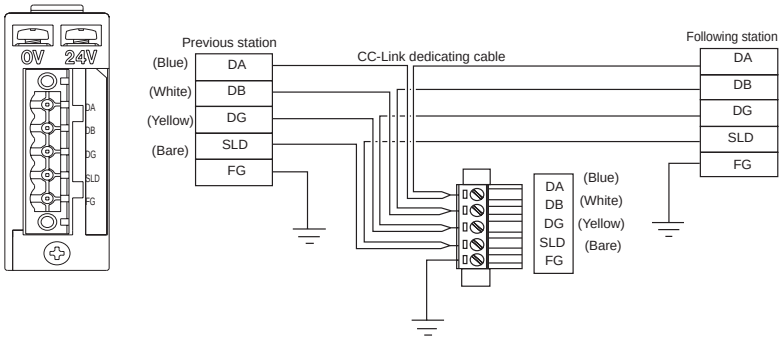

- Power supply line is connected to the terminal box.
- CC-Link cable is connected to the connector.
- Power supply for an unit and a valve is a common terminal.
- The wiring section connectors are enclosed.

T7L1

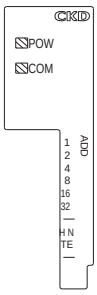

LED name	Display description
POW	Light is on when power supplies of master and slave units are ON.
COM	Light is on when normally communicating with master unit. Light is off when communication failure continues for a certain period.

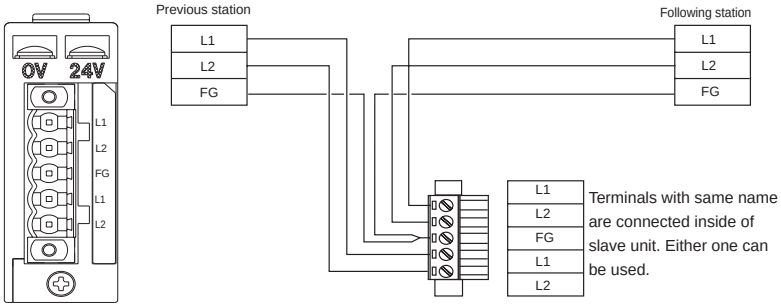

- Power supply line is connected to the terminal box.
- Communication line is connected to the connector.
- Power supply for an unit and a valve is a common terminal.
- The wiring section connectors are enclosed.

Model No.	LED display	Wiring method
T7S□1	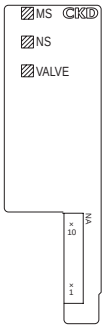	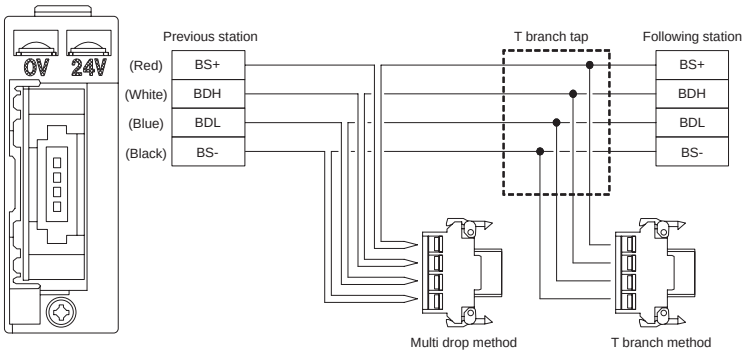

LED name	Display description
MS	Slave status is indicated with green and red lights. Errors are indicated using combination with "NS LED".
NS	Network status is indicated with green and red lights. Errors are indicated using combination with "MS LED".
VALVE	Green light is on when valve power is ON.

- Communication line/communication power supply are connected to the plug for communication.
- Valve power supply is connected to the terminal box.
- The plug for communication is not attached for this product.

MEMO

SCPD3
SCM
SSD2
MDC2
SMG
LCM
LCR
LCG
LCX
STM
STG
STR2
MRL2
GRC
Cylinder switch
MN3E MN4E
4GA/B
M4GA/B
MN4GA/B
F.R (module unit)
Clean F.R
Precision R
Press gauge Diff. press gauge
Electro-pneumatic R
Speed controller
Auxiliary valve
Fitting/ tube
Clean air unit
Pressure sensor
Flow rate sensor
Valve for air blow
Ending

Serial transmission: Wiring method

T8 *serial transmission

- The slave unit's output No. is different with each manufacturer. The internal connector pin No. and the manifold solenoid correspond as shown below.
- Station manifolds are set in order from the left with the piping port facing forward regardless of the wiring block position.
- Internal connectors are wired in order, so there may be some void numbers depending on the number of stations. These void outputs cannot be used for drive other than the solenoid manifold in use.
- The working power is 24 VDC.
- Securely fix the enclosed connector with set screw. (Proper tightening torque 0.3 N·m)

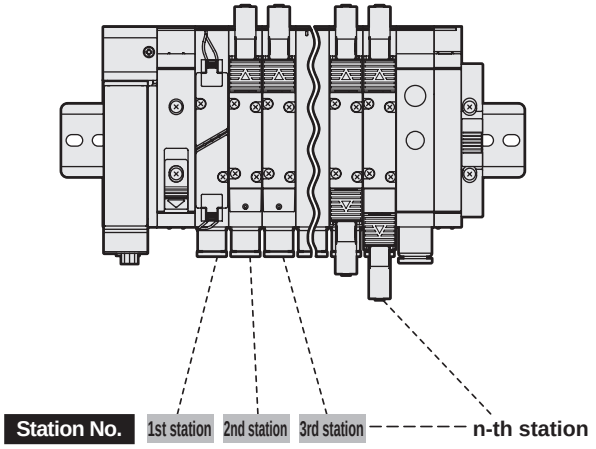

Internal circuit board connector pin No.

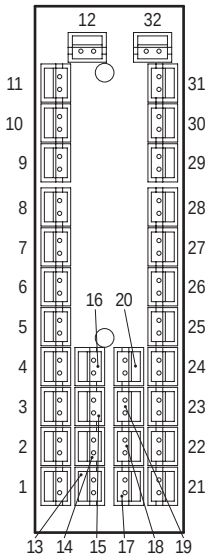

Combination of output No. and connector pin No.

- T8□1

Output No.	0	1	2	3	4	5	6	7	8	9	10	11	12	13	14	15
Connector pin No.	1	2	3	4	5	6	7	8	9	10	11	12	13	14	15	16

- T8□2

Output No.	0	1	2	3	4	5	6	7	8	9	10	11	12	13	14	15
Connector pin No.	1	2	3	4	5	6	7	8	9	10	11	12	13	14	15	16
Output No.	16	17	18	19	20	21	22	23	24	25	26	27	28	29	30	31
Connector pin No.	17	18	19	20	21	22	23	24	25	26	27	28	29	30	31	32

T8* connector pin array (example)

*: The numbers in the valve No. 1a, 1b, 2a, 2b…and so forth indicate the first station and 2nd station. The alphabetic characters a and b indicate the a side solenoid and the b side solenoid.
Max. station number differs depending on the model No. Check the individual specifications.

[Standard wiring]

- For single solenoid valve

Pin No.	1	2	3	4	5	6	7	8	9	10	11	12	13	14	15	16
Valve No.	1a	2a	3a	4a	5a	6a	7a	8a	9a	10a	11a	12a	13a	14a	15a	16a
Pin No.	17	18	19	20	21	22	23	24	25	26	27	28	29	30	31	32
Valve No.	17a	18a	19a	20a	21a	22a	23a	24a	(Void)	(Void)	(Void)	(Void)	(Void)	(Void)	(Void)	(Void)

- For double solenoid valve

Pin No.	1	2	3	4	5	6	7	8	9	10	11	12	13	14	15	16
Valve No.	1a	1b	2a	2b	3a	3b	4a	4b	5a	5b	6a	6b	7a	7b	8a	8b
Pin No.	17	18	19	20	21	22	23	24	25	26	27	28	29	30	31	32
Valve No.	9a	9b	10a	10b	11a	11b	12a	12b	13a	13b	14a	14b	15a	15b	16a	16b

- For mixed use (single/double solenoid mixture)

Pin No.	1	2	3	4	5	6	7	8	9	10	11	12	13	14	15	16
Valve No.	1a	2a	3a	3b	4a	4b	5a	6a	7a	7b	8a	9a	10a	10b	11a	11b
Pin No.	17	18	19	20	21	22	23	24	25	26	27	28	29	30	31	32
Valve No.	12a	13a	14a	14b	15a	15b	16a	17a	18a	18b	19a	20a	21a	21b	22a	22b

[Double wiring]

- For single solenoid valve

Pin No.	1	2	3	4	5	6	7	8	9	10	11	12	13	14	15	16
Valve No.	1a	(Void)	2a	(Void)	3a	(Void)	4a	(Void)	5a	(Void)	6a	(Void)	7a	(Void)	8a	(Void)
Pin No.	17	18	19	20	21	22	23	24	25	26	27	28	29	30	31	32
Valve No.	9a	(Void)	10a	(Void)	11a	(Void)	12a	(Void)	13a	(Void)	14a	(Void)	15a	(Void)	16a	(Void)

- For double solenoid valve

Pin No.	1	2	3	4	5	6	7	8	9	10	11	12	13	14	15	16
Valve No.	1a	1b	2a	2b	3a	3b	4a	4b	5a	5b	6a	6b	7a	7b	8a	8b
Pin No.	17	18	19	20	21	22	23	24	25	26	27	28	29	30	31	32
Valve No.	9a	9b	10a	10b	11a	11b	12a	12b	13a	13b	14a	14b	15a	15b	16a	16b

- For mixed use (single/double solenoid mixture)

Pin No.	1	2	3	4	5	6	7	8	9	10	11	12	13	14	15	16
Valve No.	1a	(Void)	2a	(Void)	3a	3b	4a	4b	5a	(Void)	6a	(Void)	7a	7b	8a	(Void)
Pin No.	17	18	19	20	21	22	23	24	25	26	27	28	29	30	31	32
Valve No.	9a	(Void)	10a	10b	11a	11b	12a	(Void)	13a	(Void)	14a	14b	15a	15b	16a	(Void)

* Do not use the position marked (Void).

Model No.	LED display	Wiring section

T8G*

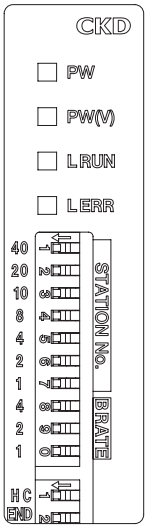

LED Indicator descriptions

LED name	Display description
PW	Lights when unit power is ON. Lights red during normal operation
PW (V)	Lights when valve power is ON. Lights red during normal operation (unable to monitor when the unit power supply is not ON)
L RUN	Lights up when receiving CC-Link refresh data successfully. Lights red during normal operation
L ERR	Lights up (red) when failing to receive CC-Link data. Lights out during normal operation

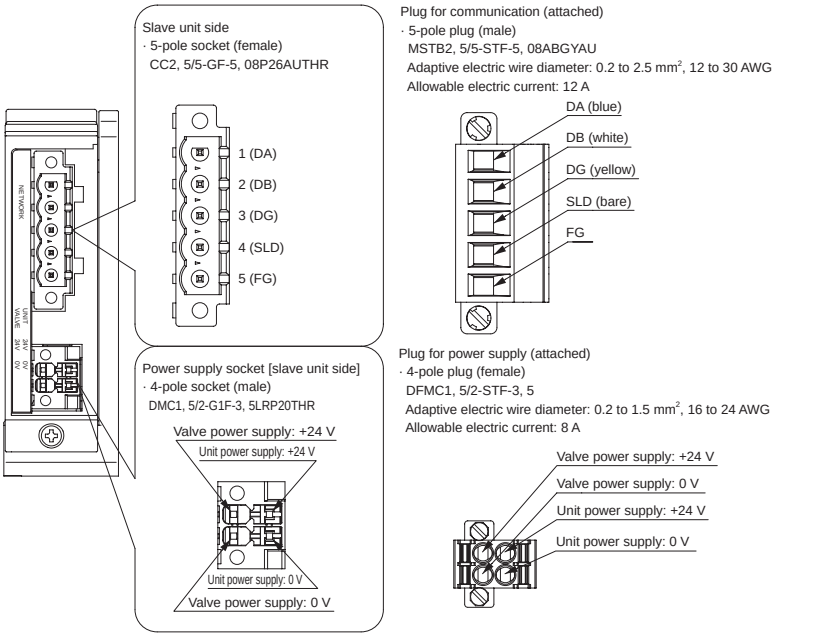

Socket pin configuration for communication

Pin	Signal name (cable color)	Function
1	DA (blue)	Communication line “DA”
2	DB (white)	Communication line “DB”
3	DG (yellow)	Communication line “DG”
4	SLD (bare)	Communication line “SLD”
5	FG	Ground

T8P*

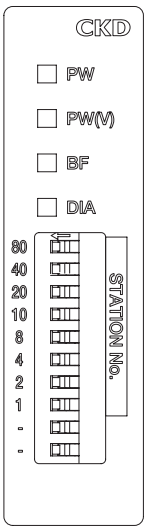

LED Indicator descriptions

LED name	Display description
PW	Lights when unit power is ON. Lights green during normal operation
PW (V)	Lights when valve power is ON. Lights green during normal operation (unable to monitor when the unit power supply is not ON)
BF	Lights up when failing to receive/send data. Lights red during anomalous operation
DIA	Lights up when a self-diagnostic failure occurs Lights red during anomalous operation

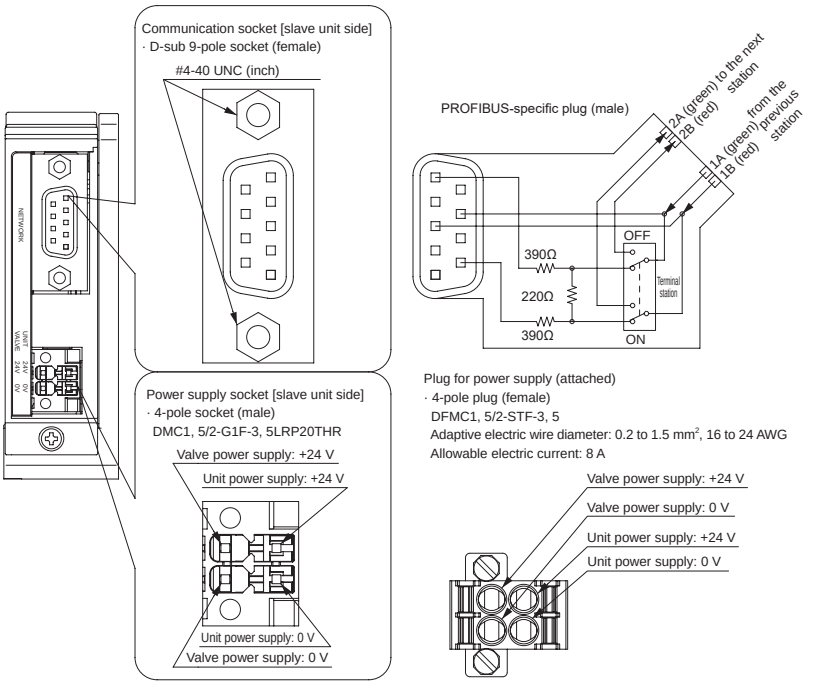

Socket pin configuration for communication

Pin	Signal name	Function
1	Shield	Shield
2	M24	Reserved
3	RxD/TxD-P	Data receive/send (plus)
4	CNTR-P	Reserved
5	DGND	GND

Pin	Signal name	Function
6	VP	Supply voltage of terminator (+5 V)
7	P24	Reserved
8	RxD/TxD-N	Data receive/send (minus)
9	CNTR-N	Reserved

Model No.	LED display	Wiring method

T8EC*

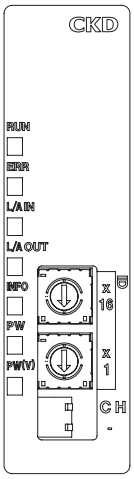

LED Indicator descriptions

LED name	Display description
RUN	Indicates the communication status of EtherCAT by lighting up/out or blinking this LED (green) (lights up green during normal communication)
ERR	Indicates the anomalous status of EtherCAT by lighting up/out or blinking this LED (red) (lights out during normal communication)
L/A IN	Indicates the status of the Ethernet port (IN side) by lighting up/out or fast-blinking this LED (green)
L/A OUT	Indicates the status of Ethernet port (OUT side) by lighting up/out or fast-blinking this LED (green)
INFO	Indicates the error status of the slave unit by lighting up this LED (red) (lights out during normal operation)
PW	Lights when unit power is ON. Lights green during normal operation
PW(V)	Lights when valve power is ON. Lights green during normal operation (unable to monitor when the unit power supply is not ON)

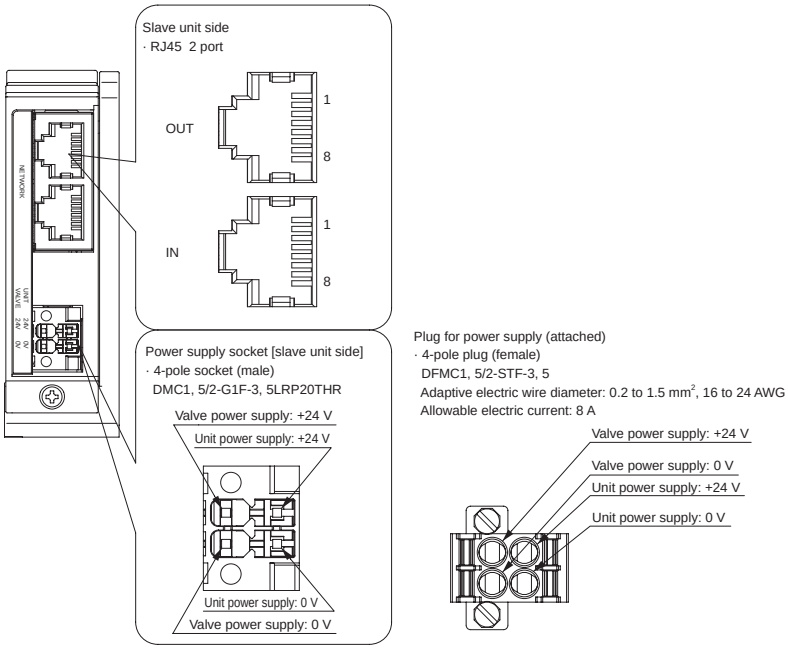

Socket pin configuration for communication

Port	Pin	Signal name	Function
IN/OUT	1	TXD+	Sending data, plus
	2	TXD-	Sending data, minus
	3	RXD+	Receiving data, plus
	4	Reserved	
	5	Reserved	

Port	Pin	Signal name	Function
IN/OUT	6	RXD-	Receiving data, minus
	7	Reserved	
	8	Reserved	

T8EN*

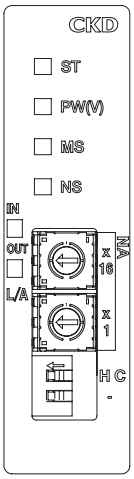

LED Indicator descriptions

LED name	Display description
ST	Indicates the status of the slave unit by lighting up or blinking this LED and changing its color (green, yellow)
PW (V)	Lights when valve power is ON. Lights green during normal operation (unable to monitor when the unit power supply is not ON)
MS	Indicates the status of the slave unit relating to EtherNet/IP by lighting up or blinking this LED and changing its color (green, red)
NS	Indicates the status of the network relating to EtherNet/IP by lighting up or blinking this LED and changing its color (green, red)
L/A IN	Indicates the status of the Ethernet port (IN side) by the color of this LED (green, yellow)
L/A OUT	Indicates the status of the Ethernet port (OUT side) by the color of this LED (green, yellow)

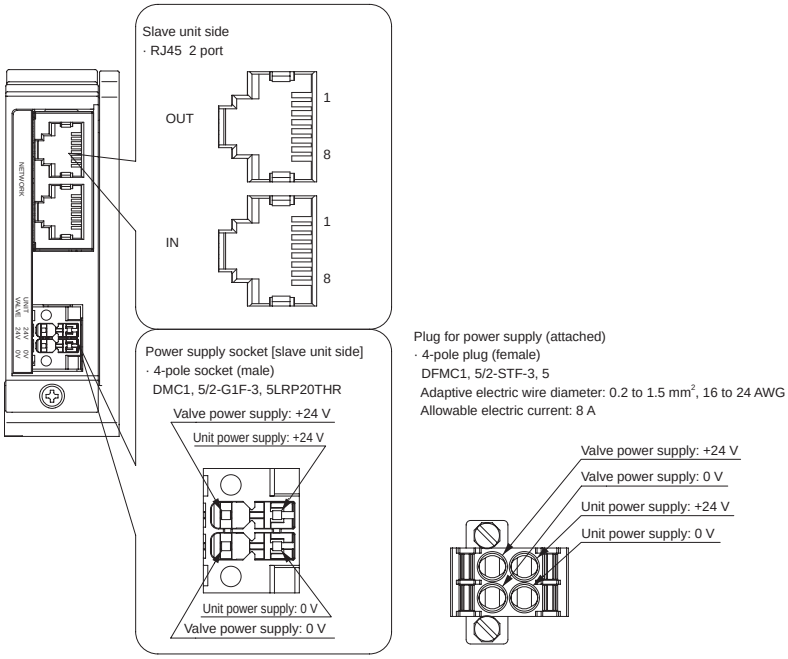

Socket pin configuration for communication

Port	Pin	Signal name	Function
IN/OUT	1	TXD+	Sending data, plus
	2	TXD-	Sending data, minus
	3	RXD+	Receiving data, plus
	4	Reserved	
	5	Reserved	

Port	Pin	Signal name	Function
IN/OUT	6	RXD-	Receiving data, minus
	7	Reserved	
	8	Reserved	

Model No.	LED display	Wiring

T8D*

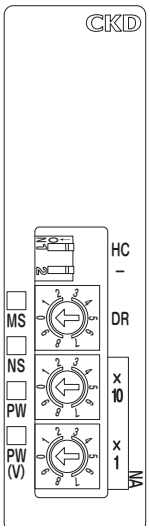

LED display description

LED name	Display description
MS	Status of slave unit related to DeviceNet indicated by LED color (green/red) and ON status (ON/blinking)
NS	Status of network related to DeviceNet indicated by LED color (green/red) and ON status (ON/blinking)
PW	Lights when communication power is ON. Green lamp ON when normal
PW(V)	Lights when valve power is ON. Green lamp ON when normal (Cannot be monitored when communication power is OFF)

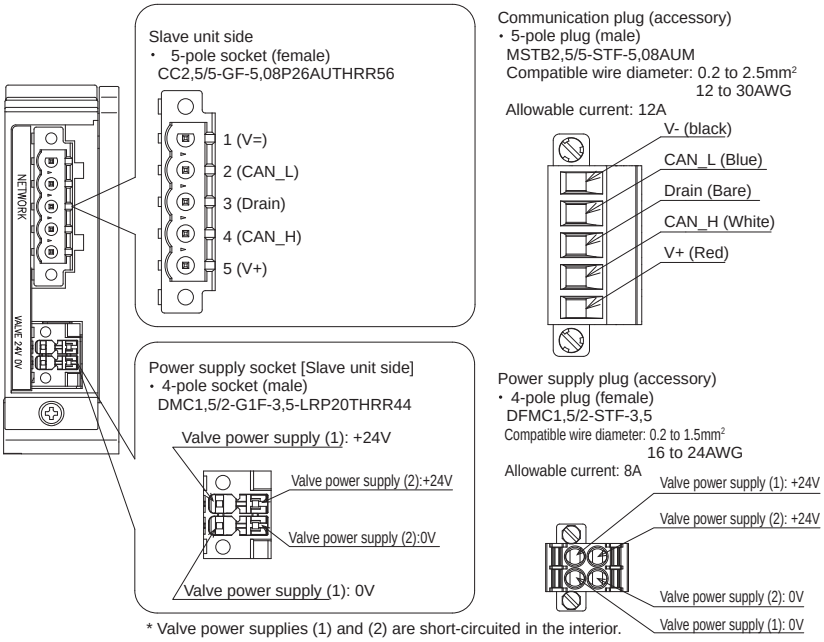

* Valve power supplies (1) and (2) are short-circuited in the interior.

Communication connector pin array

Pin	Signal name	Function
1	V-	Communication power supply (-)
2	CAN_L	Communication terminal (L)
3	Drain	Shield terminal
4	CAN_H	Communication terminal (H)
5	V+	Communication power supply (+)

T8EB*

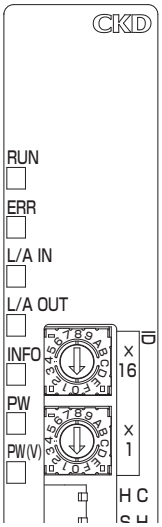

LED display description

LED name	Display description
RUN	Status of CC-Link IEF Basic communication indicated by LED ON status (ON/blinking)
ERR	Status of CC-Link IEF Basic abnormal communication indicated by LED ON status (ON/blinking)
L/A IN	Status of Ethernet port (IN side) indicated by ON LED status (ON/blinking)
L/A OUT	Status of Ethernet port (OUT side) indicated by LED ON status (ON/blinking)
INFO	Status of slave unit indicated by LED ON status (ON/blinking)
PW	Indicates unit power supply power status. Green lamp ON when powered ON
PW(V)	Indicates valve power supply power status. Green lamp ON when power turned ON (Cannot be monitored when unit power supply is OFF)

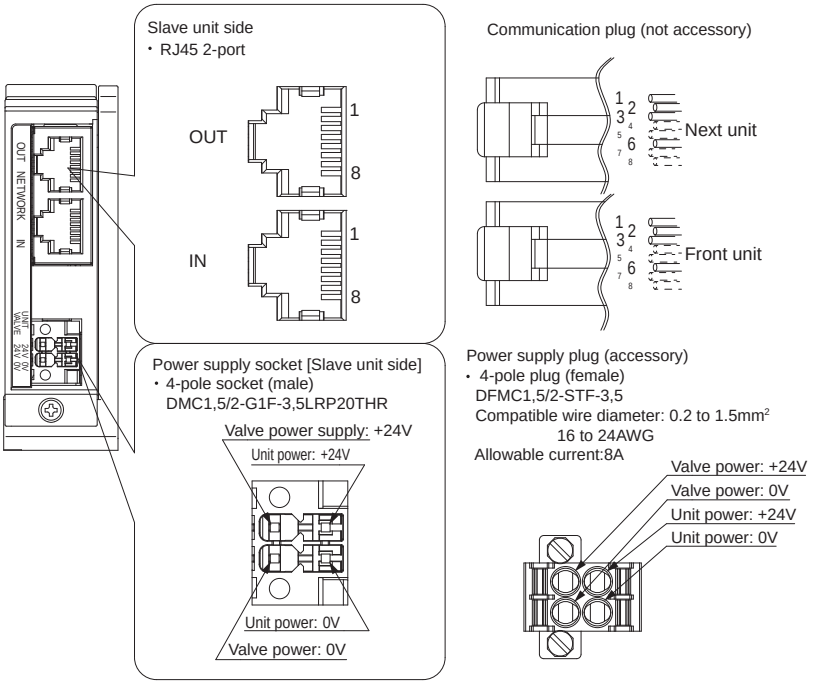

Communication plug pin array

Port	Pin	Signal name	Function
IN/OUT	1	TD+	Transmitted data, positive
	2	TD-	Transmitted data, negative
	3	RD+	Received data, positive
	4	Vacant	Vacant

Port	Pin	Signal name	Function
IN/OUT	5	Vacant	Vacant
	6	RD-	Received data, negative
	7	Vacant	Vacant
	8	Vacant	Vacant

SCPD3
SCM
SSD2
MDC2
SMG
LCM
LCR
LCG
LCX
STM
STG
STR2
MRL2
GRC
Cylinder switch
MN3E MN4E
4GA/B
M4GA/B
MN4GA/B
F.R (module unit)
Clean F.R
Precision R
Press gauge Diff. press gauge
Electro-pneumatic R
Speed controller
Auxiliary valve
Fitting/ tube
Clean air unit
Pressure sensor
Flow rate sensor
Valve for air blow
Ending

Model No.	LED display	Wiring

T8EF*

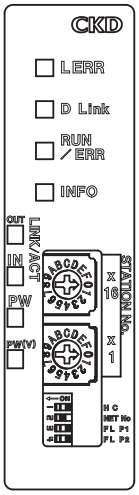

LED display description

LED□		□□□□
L ERR		Link status of Ethernet port is indicated by the LED state
D Link		Communication status of CC-Link IE Field is indicated by the LED state
RUN / ERR		Status of slave unit operation/communication is indicated by the LED state
INFO		Status of the slave unit is indicated by the LED state
Link/ ACT	OUT (P1)	Status of the Ethernet port (OUT side) is indicated by the LED state
	IN (P2)	Status of the Ethernet port (IN side) is indicated by the LED state
PW		Indicates the power status of the unit power supply. Lights when power is turned ON.
PW□V□		Indicates the power status of the valve power supply. Lights when power is ON (Cannot be monitored when the unit power is OFF.)

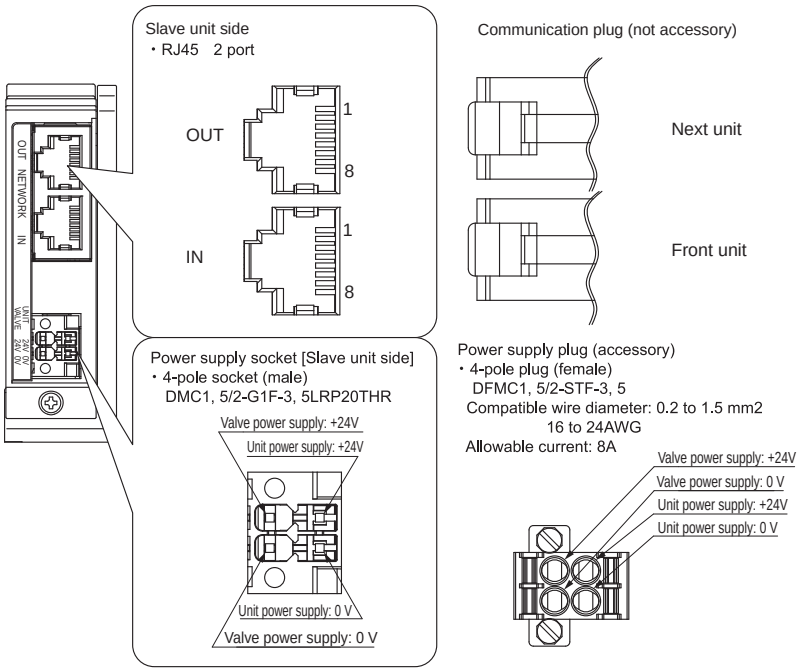

Communication plug pin array

Port	Pin	Signal name	LED
IN/OUT	1	BI_DA+	Transmit/receive data, positive
	2	BI_DA-	Transmit/receive data, negative
	3	BI_DB+	Transmit/receive data, positive
	4	BI_DC+	Transmit/receive data, positive

Port	Pin	Signal name	LED
IN/OUT	5	BI_DC-	Transmit/receive data, negative
	6	BI_DB-	Transmit/receive data, negative
	7	BI_DD+	Transmit/receive data, positive
	8	BI_DD-	Transmit/receive data, negative

*1000BASE-T straight wiring compliant

T8EP*

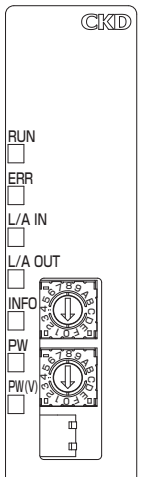

LED display description

LED name	Display description
RUN	Communication status of PROFINET indicated by LED ON status (ON/blinking)
ERR	Communication abnormal status of PROFINET indicated by LED ON status (ON/blinking)
L/A IN	Status of Ethernet port (IN side) indicated by ON LED status (ON/blinking)
L/A OUT	Status of Ethernet port (OUT side) indicated by LED ON status (ON/blinking)
INFO	Status of slave unit indicated by LED ON status (ON/blinking)
PW	Indicates unit power supply power status. Green lamp ON when powered ON
PW(V)	Indicates valve power supply power status. Green lamp ON when power turned ON (Cannot be monitored when unit power supply is OFF)

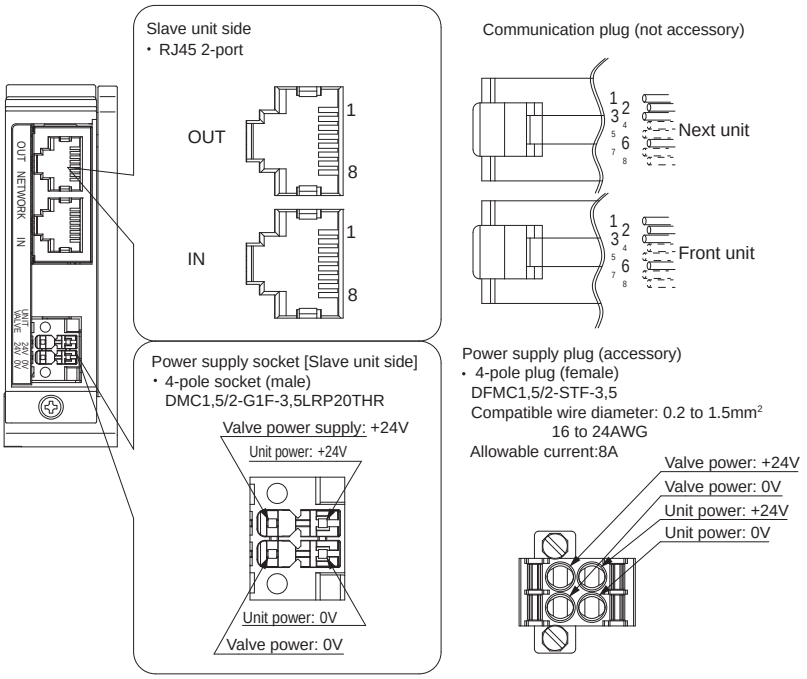

Communication plug pin array

Port	Pin	Signal name	Function
IN/OUT	1	TD+	Transmitted data, positive
	2	TD-	Transmitted data, negative
	3	RD+	Received data, positive
	4	Vacant	Vacant

Port	Pin	Signal name	Function
IN/OUT	5	Vacant	Vacant
	6	RD-	Received data, negative
	7	Vacant	Vacant
	8	Vacant	Vacant

Model No.	LED display	Wiring
T8KC*		

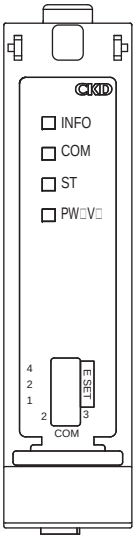

LED display description

LED name	Display description
INFO	Green lamp is ON when normal Blinks red when abnormal
COM	OFF: Unit power is not turned ON Green ON: Unit power is ON □□□□(IO-Link communication not implemented) Green blinking: unit power is ON (IO-Link communication)
ST	OFF: No abnormalities Red blinking (low speed): With maintenance Red blinking (high speed): With warning Red light: With error
PW□V□	OFF: Valve power supply not turned ON Green ON: Valve power is ON * Cannot be monitored when the unit power is not turned ON

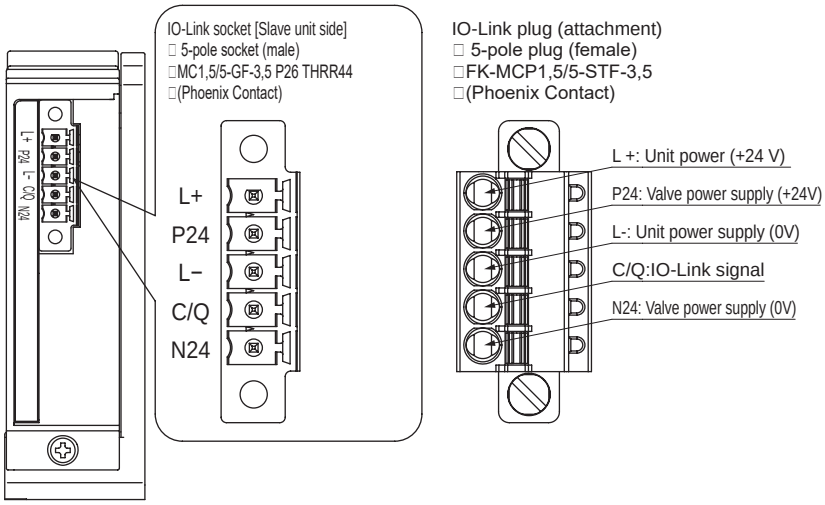

Switch setting
Output setting during communication error

E SET			Valve output operation in the event of a communication error
4	2	1	
OFF	OFF	OFF	all points OFF
	OFF	ON	All points final output data
	ON	OFF	all points ON
	ON	ON	All points final reception process data
ON	–	–	Operations set above by IO-Link communication for each point

Communication speed setting

COM	Communication speed
2□3	
OFF	COM3
ON	COM2

SCPD3
SCM
SSD2
MDC2
SMG
LCM
LCR
LCG
LCX
STM
STG
STR2
MRL2
GRC
Cylinder switch
MN3E MN4E
4GA/B
M4GA/B
MN4GA/B
F.R (module unit)
Clean F.R
Precision R
Press gauge Diff. press gauge
Electro-pneumatic R
Speed controller
Auxiliary valve
Fitting/ tube
Clean air unit
Pressure sensor
Flow rate sensor
Valve for air blow
Ending

Note: Wiring connection connectors
If the connector fits the slave unit side connector listed below, it can be used.

	Slave unit side connector model No.	Recommended connector model No. on wiring side (attachment)
T7D (DeviceNet)	MSTB2.5/5-GF-5.08AU Phoenix Contact Corp.	MSTB2.5/5-STF-5.08AUM Phoenix Contact Corp.
T7G (CC-Link) T7L (SAVE NET)	SL5.08/5/90FAU Weidmueller Corp.	BLZP50.8Hc/05/180F SN OR BX Weidmüller Corp.
T7S	XW7D-PB4-R OMRON Corporation	The plug for communication is not attached for this product. [Recommended communication plug] DCN4-BR4 Flat connector plug (without sheath) Manufactured by OMRON Corporation DCN4-TB4 Open connector (terminal box) Manufactured by OMRON Corporation HCN-TB4LMZG-#B10 Open connector (terminal box): 10 pieces included Manufactured by Honda Tsushin Kogyo Co., Ltd. HCN-A4SMUG-#B10 Connector plug (VCTF/flat): 10 pieces included Manufactured by Honda Tsushin Kogyo Co., Ltd. [Recommended connector for multiple wiring] DCN4-MD4 Connector for multiple wiring Manufactured by OMRON Corporation HCN-MD4SAG-#B10 Connector for multiple wiring: 10 pieces included Manufactured by Honda Tsushin Kogyo Co., Ltd.

Model No.		Slave unit side connector model No.	Recommended connector model No. on wiring side (attachment)
T8G** (CC-Link)	Communication	CC2,5/5-GF-5,08P26AUTHR [Phoenix Contact Corp.]	Attachment MSTB 2,5/5-STF-5,08 ABGY AU (1882832) [Phoenix Contact Corp.]
	Power supply	DMC1,5/2-G1F-3,5LRP20THR [Phoenix Contact Corp.]	Attachment DFMC1,5/2-STF-3,5 (1790292) [Phoenix Contact Corp.]
T8P** (PROFIBUS-DP)	Communication	D-SUB9 Pin (#4-40UNC: With inch type flange)	Communication plug is not attached with this product. Recommended plug for communication SUBCON-PLUS-PROFIBUS/SC2 (2708232) [Phoenix Contact Corp.] SUBCON-PLUS-PROFIBUS/AX/SC (2744380) [Phoenix Contact Corp.]
	Power supply	DMC1,5/2-G1F-3,5LRP20THR [Phoenix Contact Corp.]	Attachment DFMC1,5/2-STF-3,5 (1790292) [Phoenix Contact Corp.]
T8EC** (EtherCAT)	Communication	RJ45 connector (8 Pin × 2 port)	Communication plug is not attached with this product. Cable with recommended plug attached IETP-SB-S***□ (Shield grounding on both ends) [JMACS] ***: Cable length, □: Unit M=meter C=centimeter
	Power supply	DMC1,5/2-G1F-3,5LRP20THR [Phoenix Contact Corp.]	Attachment DFMC1,5/2-STF-3,5 (1790292) [Phoenix Contact Corp.]
T8EN** (EtherNet/IP)	Communication	RJ45 connector (8 Pin × 2 port)	Communication plug is not attached with this product. Cable with recommended plug attached IETP-SB-S***□ (Shield grounding on both ends) [JMACS] ***: Cable length, □: Unit M=meter C=centimeter
	Power supply	DMC1,5/2-G1F-3,5LRP20THR [Phoenix Contact Corp.]	Attachment DFMC1,5/2-STF-3,5 (1790292) [Phoenix Contact Corp.]
T8D** (DeviceNet)	Communication	CC 2,5/ 5-GF-5,08 P26 AUTHRR56 [Phoenix Contact Corp.]	Attachment MSTB2, 5/5-STF-5, 08AUM [Phoenix Contact Corp.]
	Power supply	DMC 1,5/2-G1F-3,5-LRP20THRR44 [Phoenix Contact Corp.]	Attachment DFMC1, 5/2-STF-3, 5 [Phoenix Contact Corp.]
T8EB** (CC-Link IEF Basic)	Communication	RJ45 connector (8 pin x 2-port)	Communication plug is not included with this product. Cable with recommended plug IETP-SB-S***□ (both ends shielded ground) [JMACS] ***: Length □: Unit M = meter C = centimeter
	Power supply	DMC 1,5/2-G1F-3,5-LRP20THRR44 [Phoenix Contact Corp.]	Attachment DFMC1, 5/2-STF-3, 5[Phoenix Contact Corp.]
T8EF** (CC-Link IE Field)	Communication	RJ45 connector (8 pin x 2-port)	Communication plug is not attached with this product. Cable with recommended plug □ IETP-SB-S**** (Both end shield ground) [JMACS] ***: Length □: Unit M = meter C = centimeter
	Power supply	DMC 1,5/2-G1F-3,5-LRP20THRR44 [Phoenix Contact Corp.]	Attachment DFMC1, 5/2-STF-3, 5 [Phoenix Contact Corp.]
T8EP** (PROFINET)	Communication	RJ45 connector (8 pin x 2-port)	Communication plug is not included with this product. Cable with recommended plug IETP-SB-S***□ (both ends shielded ground) [JMACS] ***: Length □: Unit M = meter C = centimeter
	Power supply	DMC 1,5/2-G1F-3,5-LRP20THRR44 [Phoenix Contact Corp.]	Attachment DFMC1, 5/2-STF-3, 5 [Phoenix Contact Corp.]
T8KC** (IO-Link)	Communication	RJ45 connector (□ pin x □-port)	Communication plug is not attached with this product. Cable with recommended plug □ IETP-SB-S**** (Both end shield ground) [JMACS] ***: Length □: Unit M = meter C = centimeter
	Power supply	MC1,5/5-GF-3,5P26 THRR44 [Phoenix Contact Corp.]	Accessories □FK-MCP1, 5/5-STF-3, 5 [Phoenix Contact Corp.]

MEMO

SCPD3
SCM
SSD2
MDC2
SMG
LCM
LCR
LCG
LCX
STM
STG
STR2
MRL2
GRC
Cylinder switch
MN3E MN4E
4GA/B
M4GA/B
MN4GA/B
F.R (module unit)
Clean F.R
Precision R
Press gauge Diff. press gauge
Electro-pneumatic R
Speed controller
Auxiliary valve
Fitting/ tube
Clean air unit
Pressure sensor
Flow rate sensor
Valve for air blow
Ending

M4G (metal base manifold)

* Refer to page 738 for MN4G (block manifold).

Pattern 1 Expansion to the position where preparatory wiring is equipped with

The masking plate at the planned expansion position is equipped with preparatory wiring beforehand. For the valve expansion method when preparatory wiring is equipped with, follow the steps below.

❶ Remove the preparatory socket from the masking plate.

❷ Remove the masking plate from the base.

❸ Mount the valve for expansion and assemble the socket.

Pattern 2 Expansion to the position where no preparatory wiring is equipped with

When changing the single to the double, additional internal wiring to the b side solenoid for expansion is required. For the valve expansion method when no preparatory wiring is equipped with, follow the steps below.

❶ Remove the electric cover and open the reduced wiring cover.

❷ Exchange the valve at the change position. Exchange the solenoid for the a side solenoid.

❸ Attach the socket for the b side solenoid (separately purchased). Pass the wiring through the valve and pull it out to the a side.

❹ Route the wire to inside of the electric block and insert the connector to the electric base.

❺ Store the wiring in the reduced wiring cover, close the reduced wiring cover, and attach the electric cover.

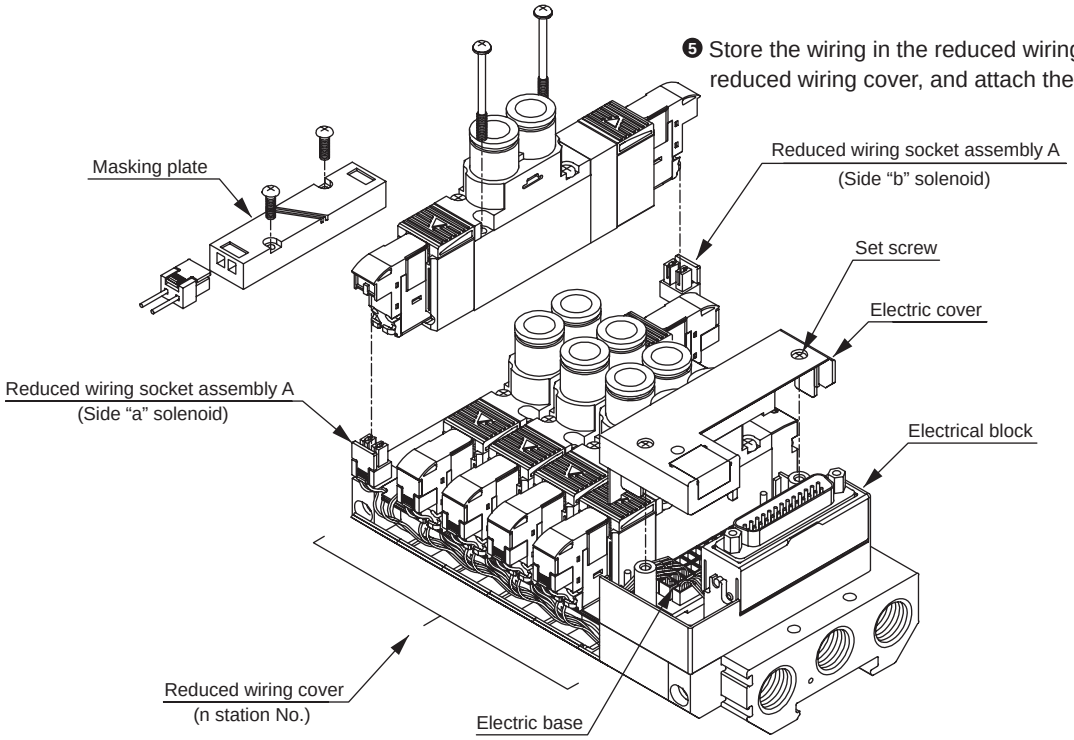

How to open and close the reduced wiring cover

How to open the reduced wiring cover

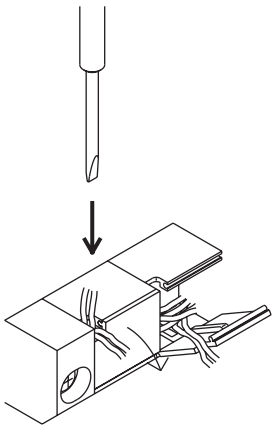

Catch the cable through hole of the reduced wiring cover with precision screw driver, etc. and open the cover. Do not use a pointed tool so as not to damage the cable while catching the hole.

How to close the reduced wiring cover

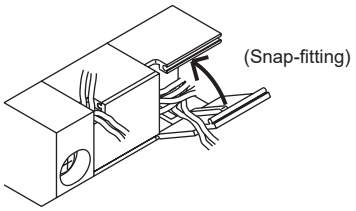

Pass the cable through the cable-through hole of the reduced wiring cover and close the cover. Be careful about line bite of cable, and close the cover until it clicks into place.

Selection of expansion socket assembly

For the socket assembly for expansion, specify a cable with appropriate length corresponding to the expansion position. Incorrect selection could cause disconnection or line bite of cable.
For A type socket assembly model No., the expansion positions are set in order from the electric block mounting side. Be careful that this method is different from setting method for the manifold valve station Nos. which are set in order from left with the b side solenoid facing forward.

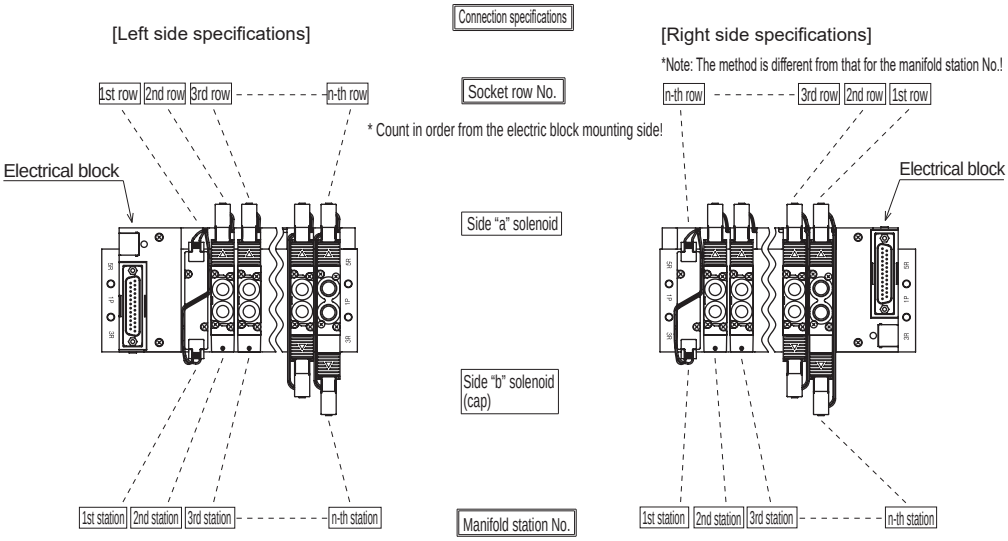

Note
1. The same for T50/T51

Model No. of socket assembly for expansion
A type connector socket assembly
4G *1 R - SOCKET- ASSY- A *2 *3 - *4

*1: Series		*2: Connection specifications		*3: Solenoid position		*4: Number of socket row	
1	4G1	Blank	Left	A	a side	1	1st row
2	4G2	R	Right	B	b side	to	to
3	4G3					24	24th row

MN4G (exploded view of block manifold)

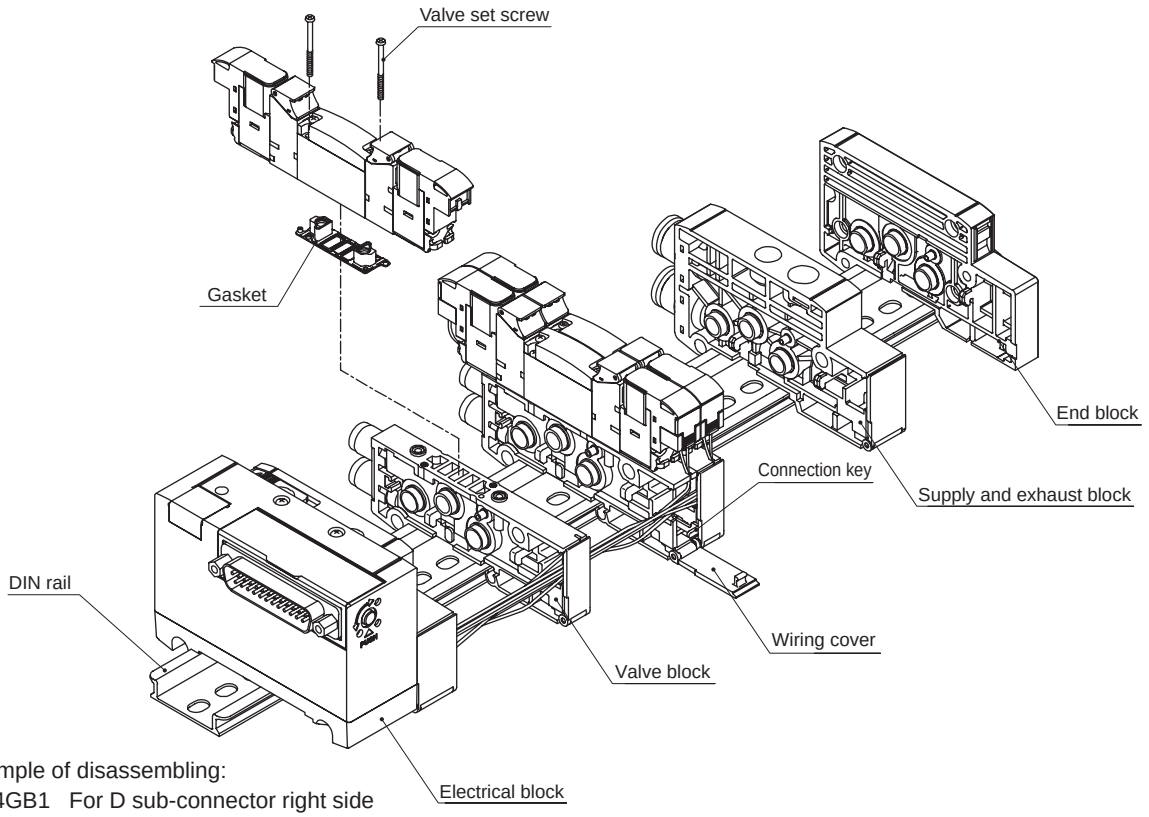

Example of disassembling:
MN4GB1 For D sub-connector right side wiring specifications

Removing the electric cover

T10R/T11R

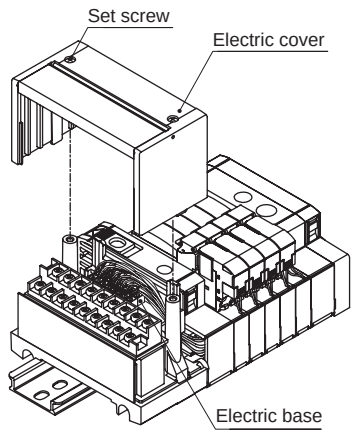

T30R/T5*R

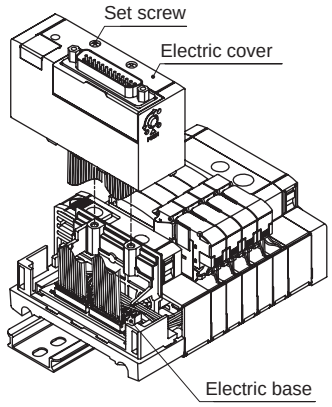

T7*

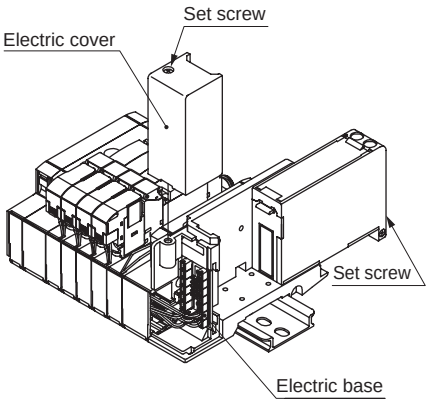

T8*

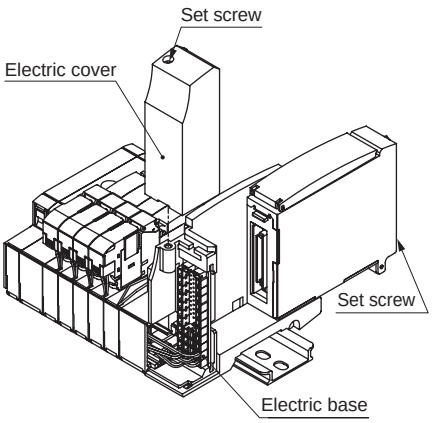

Replacing valves

Removing method
(1) Remove the socket (signal line).
(2) Loosen the set screws (2 positions).
(3) Remove the valve from the valve block.

Mounting method
Perform the reverse order of removing.
Refer to the right table below for the recommended tightening torque for the set screw.

Note) Different valve blocks are used for single wiring (V1) and double wiring (V2) respectively. Accordingly, when changing from single to double or from double to single, exchange the whole of discrete valve block with solenoid valve.

Recommended tightening torque for the valve set screw

	Size	Recommended tightening torque (N·m)
4G1	M1.7	0.18 to 0.22
4G2	M2.5	0.35 to 0.40

Increasing the valve blocks

(1) Loosen the DIN rail fixing screws.
(2) Open the reduced wiring cover
(3) Pull the connection key of where the manifold to be increased, and remove the connection between blocks.
(4) Remove the cover of the electric block to expose the electric base. (Removing the electric cover)
(5) Connect (*2) the signal wire (socket assembly) (*1) to electrical base, and mount the signal wire to valve block. (Fig. 1)
*1 [Refer to Selection of expansion socket assembly below.]
*2 [Refer to pages 740 to 743 for instructions on connecting to the electric base.]
(6) Mount the valve block to be added to the DIN rail. (Fig. 2)
(7) Press and connect so that there is no gap between blocks, and press the key.
(8) Close wiring cover and tighten electrical block cover, while taking care not to catch signal wires. (tightening torque: 0.35 to 0.50 N·m)
(9) Push the operation button to the direction indicated by the arrow. The built-in DIN rail fixing brackets slide to the fixed position.
(10) While holding down so that there is no gap between blocks, tighten DIN rail set screws. At this time, make sure that the operation button locates on the fixing side. (recommended tightening torque 1.2 to 1.6 N·m)
* Up to 2 stations can be expanded before the furthest position from the wiring block.

Fig. 1

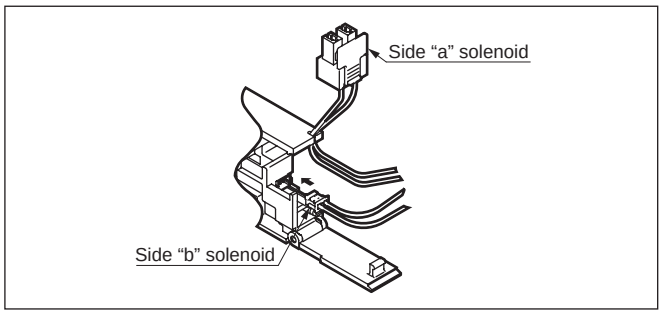

Fig. 2

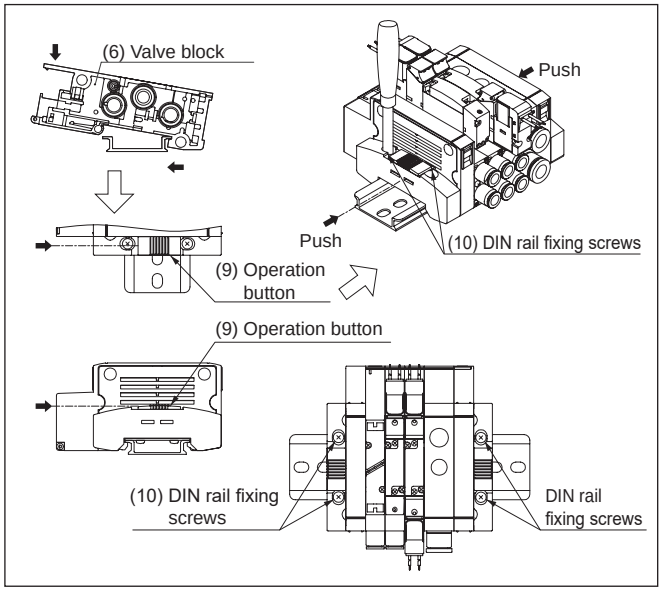

Selection of expansion socket assembly

Calculate the distance W between the expansion position and the electrical block (Fig. 3), and select a cable of an appropriate length from [Table 1].
Be careful that the required socket assembly differs between a side solenoid and b side solenoid. Although Fig. 3 shows the electric block with left side specifications, similarly calculate the distance W between the expansion position and the electric block for the right side specifications.

Calculation of W

• MN4G1
$W = (10.5 \times n) + (16 \times m) + (10.5 \times l)$

• MN4G2
$W = (16 \times n) + (18 \times m) + (10.5 \times l)$
n: Number of valve blocks m: Number of supply and exhaust blocks
l: Number of partition blocks

• MN4GX
Calculate W using the mix block width of 16.

[Model No. of socket assembly for expansion]
For a side solenoid
N4GR - SOCKET - ASSY - A - Selection No.
For b side solenoid
N4GR - RELAY - SOCKET - Selection No.

Fig. 3

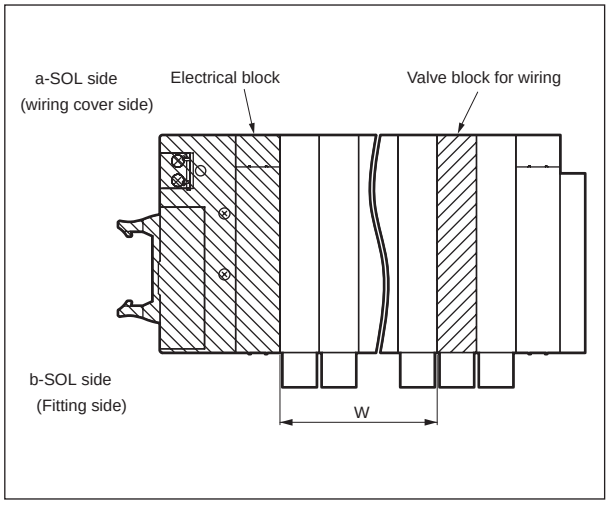

[Table 1] W length - selection No. compatibility table

Selection No.	Type of wiring		
	T10/11 (R)	T30/5*/6* (R)	T7*/T8*
2		0	25 or less
3	20 or less	Over 0 to 30	Over 25 to 55
4	Over 20 to 70	Over 30 to 80	Over 55 to 105
5	Over 70 to 120	Over 80 to 130	Over 105 to 155
6	Over 120 to 170	Over 130 to 180	Over 155 to 205
7	Over 170 to 260	Over 180 to 270	Over 205 to 295
8	Over 260 to 350	Over 270 to 360	Over 295 to 385
9	Over 350 to 450	Over 360 to 460	Over 385 to 485
10	Over 450 to 570	Over 460 to 580	Over 485 to 605

Instructions for connecting electric base (standard wiring)

The corresponding rules for connector and valve on the electric base vary depending on the reduced wiring specifications (T10, T11, T30, T50, T51, T52, T53, T6*, T7*, T8*). For connector wiring, check the connector No. printed on the base.

For wiring of mix (consolidation), the manifold configuration as shown in the right figure is indicated as an example.

⦿ Manifold configuration (Example)

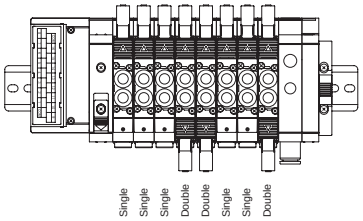

T10

Electric circuit board assembly

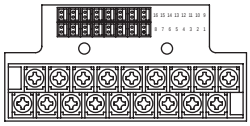

Wire in order of arrow

16 15 14 13 12 11 10 9
8 7 6 5 4 3 2 1

Compatibility with valves

1) For single SOL only (MF station No. up to 16 stations)

Terminal block No.	16	15	14	13	12	11	10	9
Valve No.	16a	15a	14a	13a	12a	11a	10a	9a
Terminal block No.	8	7	6	5	4	3	2	1
Valve No.	8a	7a	6a	5a	4a	3a	2a	1a

2) For double SOL only (MF station No. up to 8 stations)

Terminal block No.	16	15	14	13	12	11	10	9
Valve No.	8b	8a	7b	7a	6b	6a	5b	5a
Terminal block No.	8	7	6	5	4	3	2	1
Valve No.	4b	4a	3b	3a	2b	2a	1b	1a

Wire in order of arrow

3) For mix (consolidation) (solenoid No. up to 16 positions)

Terminal block No.	16	15	14	13	12	11	10	9
Valve No.	(Void)	(Void)	(Void)	(Void)	(Void)	8b	8a	7a
Terminal block No.	8	7	6	5	4	3	2	1
Valve No.	6a	5b	5a	4b	4a	3a	2a	1a

* Rules for wiring!

16 15 14 13 12 11 10 9
8 7 6 5 4 3 2 1

Wire in order of arrow (in order of connector No.)

T11

Electric circuit board assembly

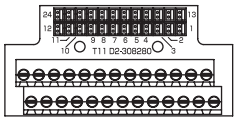

Wire in order of arrow

24 23 14 13
12 11 2 1

Compatibility with valves

1) For single SOL only (MF station No. up to 24 stations)

Connector No.	24	23	22	21	20	19	18	17	16	15	14	13
Valve No.	24a	23a	22a	21a	20a	19a	18a	17a	16a	15a	14a	13a
Connector No.	12	11	10	9	8	7	6	5	4	3	2	1
Valve No.	12a	11a	10a	9a	8a	7a	6a	5a	4a	3a	2a	1a

2) For double SOL only (MF station No. up to 12 stations)

Connector No.	24	23	22	21	20	19	18	17	16	15	14	13
Valve No.	12b	12a	11b	11a	10b	10a	9b	9a	8b	8a	7b	7a
Connector No.	12	11	10	9	8	7	6	5	4	3	2	1
Valve No.	6b	6a	5b	5a	4b	4a	3b	3a	2b	2a	1b	1a

3) For mix (consolidation) (solenoid No. up to 24 positions)

Connector No.	24	23	22	21	20	19	18	17	16	15	14	13
Valve No.	(Void)	(Void)	(Void)	(Void)	(Void)	(Void)	(Void)	(Void)	(Void)	(Void)	(Void)	(Void)
Connector No.	12	11	10	9	8	7	6	5	4	3	2	1
Valve No.	(Void)	8b	8a	7a	6a	5b	5a	4b	4a	3a	2a	1a

* Rules for wiring!

24 23 14 13
12 11 2 1

Wire in order of arrow

T30

Electric circuit board assembly

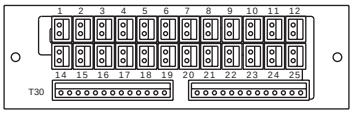

Wire in order of arrow

1 2 3 4 5 6 7 8 9 10 11 12
14 15 16 17 18 19 20 21 22 23 24 25

Compatibility with valves

1) For single SOL (MF station No. up to 24 stations)

Connector No.	1	2	3	4	5	6	7	8	9	10	11	12
Valve No.	1a	3a	5a	7a	9a	11a	13a	15a	17a	19a	21a	23a
Connector No.	14	15	16	17	18	19	20	21	22	23	24	25
Valve No.	2a	4a	6a	8a	10a	12a	14a	16a	18a	20a	22a	24a

2) For double SOL (MF station No. up to 12 stations)

Connector No.	1	2	3	4	5	6	7	8	9	10	11	12
Valve No.	1a	2a	3a	4a	5a	6a	7a	8a	9a	10a	11a	12a
Connector No.	14	15	16	17	18	19	20	21	22	23	24	25
Valve No.	1b	2b	3b	4b	5b	6b	7b	8b	9b	10b	11b	12b

Wire in order of arrow

3) For mix (consolidation) (solenoid No. up to 24 positions)

Connector No.	1	2	3	4	5	6	7	8	9	10	11	12
Valve No.	1a	3a	4b	5b	7a	8b	(Void)	(Void)	(Void)	(Void)	(Void)	(Void)
Connector No.	14	15	16	17	18	19	20	21	22	23	24	25
Valve No.	2a	4a	5a	6a	8a	(Void)	(Void)	(Void)	(Void)	(Void)	(Void)	(Void)

* Rules for wiring!

1 2 3 4 5
14 15 16 17 18

Wire in order of arrow

T50/T6G1

Electric circuit board assembly

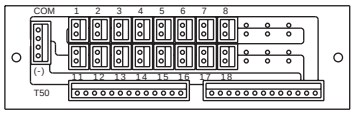

Wire in order of arrow

1 2 3 4 5 6 7 8
11 12 13 14 15 16 17 18

Compatibility with valves

1) For single SOL (MF station No. up to 16 stations)

Connector No.	1	2	3	4	5	6	7	8
Valve No.	1a	2a	3a	4a	5a	6a	7a	8a
Connector No.	11	12	13	14	15	16	17	18
Valve No.	9a	10a	11a	12a	13a	14a	15a	16a

2) For double SOL (MF station No. up to 8 stations)

Connector No.	1	2	3	4	5	6	7	8
Valve No.	1a	1b	2a	2b	3a	3b	4a	4b
Connector No.	11	12	13	14	15	16	17	18
Valve No.	5a	5b	6a	6b	7a	7b	8a	8b

Wire in order of arrow

3) For mix (consolidation) (solenoid No. up to 16 positions)

Connector No.	1	2	3	4	5	6	7	8
Valve No.	1a	2a	3a	4a	4b	5a	5b	6a
Connector No.	11	12	13	14	15	16	17	18
Valve No.	7a	8a	8b	(Void)	(Void)	(Void)	(Void)	(Void)

* Rules for wiring: in order of connector No.!

1 2 3 4 5 6 7 8
11 12 13 14 15 16 17 18

T51

Electric circuit board assembly

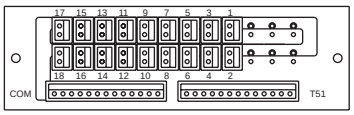

Wire in order of arrow

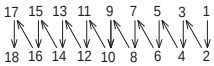

Compatibility with valves

1) For single SOL (MF station No. up to 18 stations)

Connector No.	17	15	13	11	9	7	5	3	1
Valve No.	17a	15a	13a	11a	9a	7a	5a	3a	1a
Connector No.	18	16	14	12	10	8	6	4	2
Valve No.	18a	16a	14a	12a	10a	8a	6a	4a	2a

2) For double SOL (MF station No. up to 9 stations)

Connector No.	17	15	13	11	9	7	5	3	1
Valve No.	9a	8a	7a	6a	5a	4a	3a	2a	1a
Connector No.	18	16	14	12	10	8	6	4	2
Valve No.	9b	8b	7b	6b	5b	4b	3b	2b	1b

3) For mix (consolidation) (solenoid No. up to 18 positions)

Connector No.	17	15	13	11	9	7	5	3	1
Valve No.	(Void)	(Void)	(Void)	8b	7a	5b	4b	3a	1a
Connector No.	18	16	14	12	10	8	6	4	2
Valve No.	(Void)	(Void)	(Void)	(Void)	8a	6a	5a	4a	2a

* Rules for wiring!

Wire in order of arrow
(in order of connector No.)

T52

Electric circuit board assembly

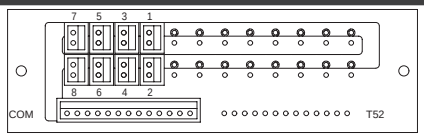

Wire in order of arrow

Compatibility with valves

1) For single SOL (MF station No. up to 8 stations)

Connector No.	7	5	3	1
Valve No.	7a	5a	3a	1a
Connector No.	8	6	4	2
Valve No.	8a	6a	4a	2a

2) For double SOL (MF station No. up to 4 stations)

Connector No.	7	5	3	1
Valve No.	4a	3a	2a	1a
Connector No.	8	6	4	2
Valve No.	4b	3b	2b	1b

3) For mix (consolidation) (solenoid No. up to 8 positions)

Connector No.	7	5	3	1
Valve No.	5b	4b	3a	1a
Connector No.	8	6	4	2
Valve No.	6a	5a	4a	2a

* Rules for wiring!

Wire in order of arrow
(in order of connector No.)

T53

Electric circuit board assembly

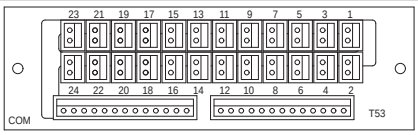

Wire in order of arrow

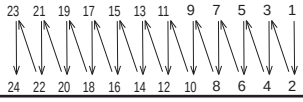

Compatibility with valves

1) For single SOL (MF station No. up to 24 stations for MN4G1 and up to 20 stations for MN4G2)

Connector No.	23	21	19	17	15	13	11	9	7	5	3	1
Valve No.	23a	21a	19a	17a	15a	13a	11a	9a	7a	5a	3a	1a
Connector No.	24	22	20	18	16	14	12	10	8	6	4	2
Valve No.	24a	22a	20a	18a	16a	14a	12a	10a	8a	6a	4a	2a

2) For double SOL (MF station No. up to 12 stations)

Connector No.	23	21	19	17	15	13	11	9	7	5	3	1
Valve No.	12a	11a	10a	9a	8a	7a	6a	5a	4a	3a	2a	1a
Connector No.	24	22	20	18	16	14	12	10	8	6	4	2
Valve No.	12b	11b	10b	9b	8b	7b	6b	5b	4b	3b	2b	1b

3) For mix (consolidation) (solenoid No. up to 24 positions)

Connector No.	23	21	19	17	15	13	11	9	7	5	3	1
Valve No.	(Void)	(Void)	(Void)	(Void)	(Void)	(Void)	8b	7a	5b	4b	3a	1a
Connector No.	24	22	20	18	16	14	12	10	8	6	4	2
Valve No.	(Void)	(Void)	(Void)	(Void)	(Void)	(Void)	(Void)	8a	6a	5a	4a	2a

* Rules for wiring!

Wire in order of arrow
(in order of connector No.)

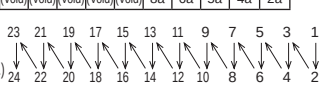

T7*

Electric circuit board assembly

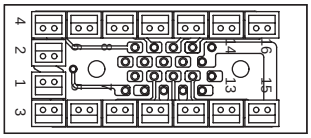

Wire in order of arrow

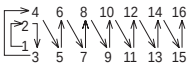

Compatibility with valves

1) For single SOL only (MF station No. up to 16 stations)

Connector No.	2	4	6	8	10	12	14	16
Valve No.	2a	4a	6a	8a	10a	12a	14a	16a
Connector No.	1	3	5	7	9	11	13	15
Valve No.	1a	3a	5a	7a	9a	11a	13a	15a

2) For double SOL only (MF station No. up to 8 stations)

Connector No.	2	4	6	8	10	12	14	16
Valve No.	1b	2b	3b	4b	5b	6b	7b	8b
Connector No.	1	3	5	7	9	11	13	15
Valve No.	1a	2a	3a	4a	5a	6a	7a	8a

3) For mix (consolidation) (solenoid No. up to 16 positions)

Connector No.	2	4	6	8	10	12	14	16
Valve No.	2a	4a	5a	6a	8a	(Void)	(Void)	(Void)
Connector No.	1	3	5	7	9	11	13	15
Valve No.	1a	3a	4b	5b	7a	8b	(Void)	(Void)

* Rules for wiring!

Wire in order of arrow
(in order of connector No.)

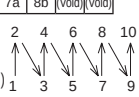

T8*

Electric circuit board assembly

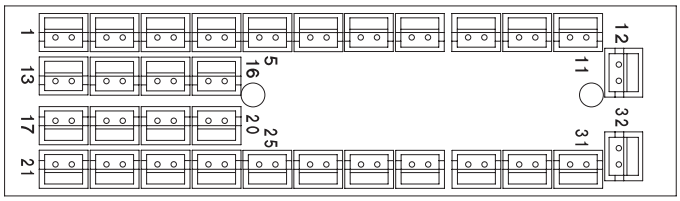

Wire in order of arrow

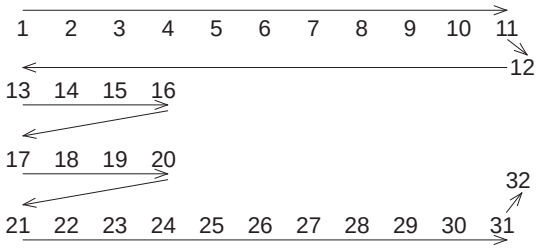

Compatibility with valves

1) For single SOL only (MF station No. up to 24 stations for MN4G1 and up to 20 stations for MN4G2)

Pin No.	1	2	3	4	5	6	7	8	9	10	11	12	13	14	15	16
Valve No.	1a	2a	3a	4a	5a	6a	7a	8a	9a	10a	11a	12a	13a	14a	15a	16a
Pin No.	17	18	19	20	21	22	23	24	25	26	27	28	29	30	31	32
Valve No.	17a	18a	19a	20a	21a	22a	23a	24a	(Void)	(Void)	(Void)	(Void)	(Void)	(Void)	(Void)	(Void)

2) For double SOL only (MF station No. up to 16 stations)

Pin No.	1	2	3	4	5	6	7	8	9	10	11	12	13	14	15	16
Valve No.	1a	1b	2a	2b	3a	3b	4a	4b	5a	5b	6a	6b	7a	7b	8a	8b
Pin No.	17	18	19	20	21	22	23	24	25	26	27	28	29	30	31	32
Valve No.	9a	9b	10a	10b	11a	11b	12a	12b	13a	13b	14a	14b	15a	15b	16a	16b

3) For mix (consolidation) (solenoid No. up to 32 positions)

Pin No.	1	2	3	4	5	6	7	8	9	10	11	12	13	14	15	16
Valve No.	1a	2a	3a	4a	4b	5a	5b	6a	7a	8a	8b	(Void)	(Void)	(Void)	(Void)	(Void)
Pin No.	17	18	19	20	21	22	23	24	25	26	27	28	29	30	31	32
Valve No.	(Void)	(Void)	(Void)	(Void)	(Void)	(Void)	(Void)	(Void)	(Void)	(Void)	(Void)	(Void)	(Void)	(Void)	(Void)	(Void)

Wire in order of arrow

* Rules for wiring!

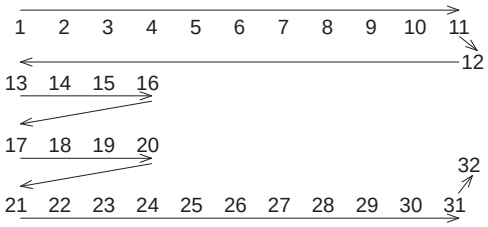

Wire in order of arrow
(in order of connector No.)

Instructions for connecting electric base (double wiring)

The double wiring specifications correspond to the wiring of the double solenoid not depending on the switching position classification of solenoid valve to be mounted. Accordingly, the standard wiring and the double SOL only of double wiring have the same wiring. As an example, T53 is shown in the figure below. Refer to this example.

T53 (example)

Electric circuit board assembly

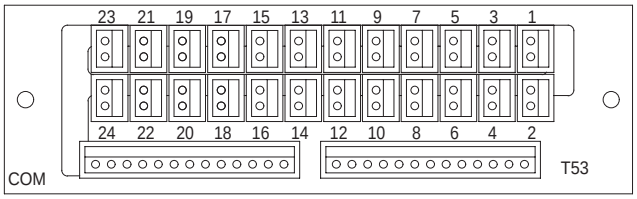

Wire in order of arrow

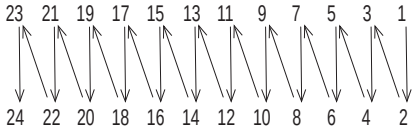

Compatibility with valves

1) For single SOL (MF station No. up to 12 stations)

Connector No.	23	21	19	17	15	13	11	9	7	5	3	1
Valve No.	12a	11a	10a	9a	8a	7a	6a	5a	4a	3a	2a	1a
Connector No.	24	22	20	18	16	14	12	10	8	6	4	2
Valve No.	(Void)	(Void)	(Void)	(Void)	(Void)	(Void)	(Void)	(Void)	(Void)	(Void)	(Void)	(Void)

2) For double SOL (MF station No. up to 12 stations)

Connector No.	23	21	19	17	15	13	11	9	7	5	3	1
Valve No.	12a	11a	10a	9a	8a	7a	6a	5a	4a	3a	2a	1a
Connector No.	24	22	20	18	16	14	12	10	8	6	4	2
Valve No.	12b	11b	10b	9b	8b	7b	6b	5b	4b	3b	2b	1b

Wire in order of arrow

3) For mix (consolidation) (solenoid No. up to 24 positions)

Connector No.	23	21	19	17	15	13	11	9	7	5	3	1
Valve No.	(Void)	(Void)	(Void)	(Void)	8a	7a	6a	5a	4a	3a	2a	1a
Connector No.	24	22	20	18	16	14	12	10	8	6	4	2
Valve No.	(Void)	(Void)	(Void)	(Void)	8b	(Void)	(Void)	5b	4b	(Void)	(Void)	(Void)

* Rules for wiring!
Wire in order of arrow
(in order of connector No.)

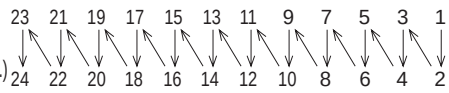

SCPD3
SCM
SSD2
MDC2
SMG
LCM
LCR
LCG
LCX
STM
STG
STR2
MRL2
GRC
Cylinder switch
MN3E MN4E
4GA/B
M4GA/B
MN4GA/B
F.R (module unit)
Clean F.R
Precision R
Press gauge Diff. press gauge
Electro-pneumatic R
Speed controller
Auxiliary valve
Fitting/ tube
Clean air unit
Pressure sensor
Flow rate sensor
Valve for air blow
Ending

(1) The cylinder average speed is obtained from the combination of 4G series and piping system. It is expressed as the cylinder's piston speed calculated by dividing the stroke length by the time that the piston rod takes from start to end of movement with the cylinder rod installed facing upward. When the load factor is 50%, the average speed should be approximately the cylinder's piston speed multiplied by 0.5.
(2) The cylinder average speed described in "Pneumatic system device selection guide" is that when one cylinder is operated alone.
(3) Effective cross-sectional area of the solenoid valve used for calculation in table below is a value at 2-position.
(4) This selection guide should be used as a guideline. Make sure your actual use conditions and refer to our sizing program for details.
(5) Effective cross-sectional area S and sonic conductance C are converted as S ≈ 5.0 × C.

Standard system list 4G (metal base)

* Refer to page 746 for MN4G (block manifold).

[Discrete]

Series	Body piping					
	Model No.	System No.	Speed controller	Silencer	Piping	Combined effective cross-sectional area (mm^2) Pipe length 1 m
4G1	4GA110R-C4	A1	SC3W-M5-4	SLM-M5	ø4 × ø2.5	1.0
	4GA110R-C6	B1	SC1-6	SLM-M5	ø6 × ø4	2.5
4G2	4GA210R-C6	B2	SC1-6	SLW-6S	ø6 × ø4	4.3
	4GA210R-C8	B3	SC1-8	SLW-6S	ø8 × ø5.7	6.5
4G3	4GA310R-C8	C1	SC1-8	SLW-8S	ø8 × ø5.7	8.3
	4GA310R-C10	C2	SC1-10	SLW-8S	ø10 × ø7.2	11.6
	4GA310R-C10	C3	SC1-15	SLW-8S	ø10 × ø7.2	12.7

Series	Base piping					
	Model No.	System No.	Speed controller	Silencer	Piping	Combined effective cross-sectional area (mm^2) Pipe length 1 m
4G1	4GB110R-06	A2	SC3W-6-4	SLW-6S	ø4 × ø2.5	1.6
	4GB110R-06	B4	SC1-6	SLW-6S	ø6 × ø4	3.6
4G2	4GB210R-08	B5	SC1-8	SLW-8S	ø6 × ø4	5.0
	4GB210R-08	C4	SC1-10	SLW-8S	ø8 × ø5.7	8.3
4G3	4GB310R-10	C5	SC1-10	SLW-10L	ø10 × ø7.2	12.6
	4GB310R-10	C6	SC1-15	SLW-10L	ø12 × ø8.9	15.9

* System Nos. are indicated in the graph below.

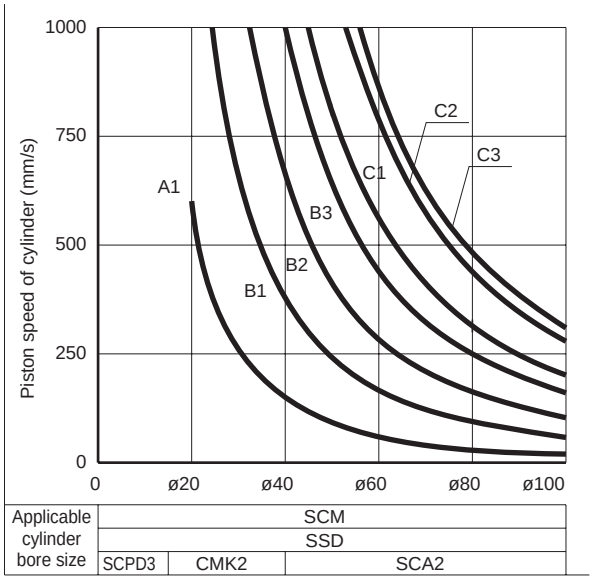

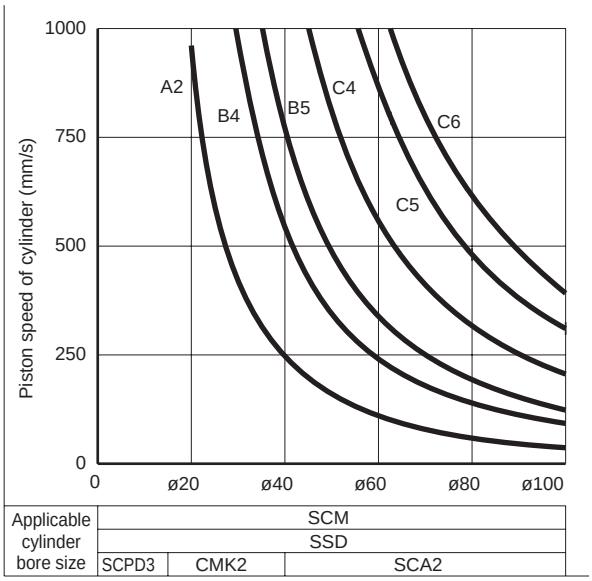

[Manifold] (With internal exhaust check valve)

Series	Body piping					
	Model No.	System No.	Speed controller	Silencer	Piping	Combined effective cross-sectional area (mm^2) Pipe length 1 m
4G1	M4GA110R-C4	A3	SC3W-M5-4	SLW-6S	ø4 × ø2.5	1.0
	M4GA110R-C6	B6	SC1-6	SLW-6S	ø6 × ø4	2.8
4G2	M4GA210R-C6	B7	SC1-6	SLW-8S	ø6 × ø4	4.2
	M4GA210R-C8	B8	SC1-8	SLW-8S	ø8 × ø5.7	6.2
4G3	M4GA310R-C8	C7	SC1-8	SLW-10L	ø8 × ø5.7	7.5
	M4GA310R-C10	C8	SC1-10	SLW-10L	ø10 × ø7.2	9.8
	M4GA310R-C10	C9	SC1-15	SLW-10L	ø10 × ø7.2	10.5

Series	Base piping					
	Model No.	System No.	Speed controller	Silencer	Piping	Combined effective cross-sectional area (mm^2) Pipe length 1 m
4G1	M4GB110R-C4	A4	SC3W-6-4	SLW-6S	ø4 × ø2.5	1.5
	M4GB110R-C6	B9	SC1-6	SLW-6S	ø6 × ø4	2.8
4G2	M4GB210R-C6	B10	SC1-8	SLW-8S	ø6 × ø4	4.6
	M4GB210R-C8	C10	SC1-10	SLW-8S	ø8 × ø5.7	6.7
4G3	M4GB310R-C10	C11	SC1-10	SLW-10L	ø10 × ø7.2	10.0
	M4GB310R-C10	C12	SC1-15	SLW-10L	ø12 × ø8.9	11.5

* System No. are indicated in the graph below.

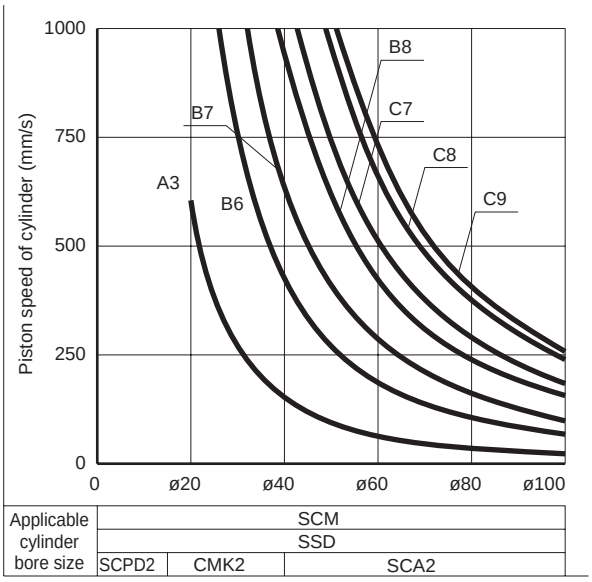

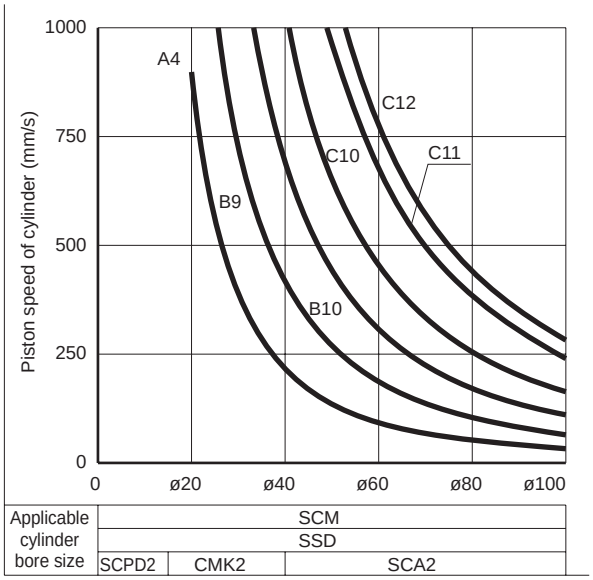

SCPD3
SCM
SSD2
MDC2
SMG
LCM
LCR
LCG
LCX
STM
STG
STR2
MRL2
GRC
Cylinder switch
MN3E MN4E
4GA/B
M4GA/B
MN4GA/B
F.R (module unit)
Clean F.R
Precision R
Press gauge Diff. press gauge
Electro-pneumatic R
Speed controller
Auxiliary valve
Fitting/ tube
Clean air unit
Pressure sensor
Flow rate sensor
Valve for air blow
Ending

Standard system list **MN4G (block manifold)** (With internal exhaust check valve)

1. Common exhaust

Series	Solenoid valve port size	System No.	Speed controller	Cylinder piping pipe length 1 m	Common exhaust piping	Combined effective cross-sectional area (mm²)
MN4G1	C4	A1	SC3W-M5-4	ø4 × ø2.5	ø6 × ø4 × 3 m	1.0
	C4	A2	SC3W-6-4	ø4 × ø2.5	ø6 × ø4 × 3 m	1.4
	C6	B1	SC1-6	ø6 × ø4	ø8 × ø5.7 × 3 m	2.7
MN4G2	C6	B2	SC1-6	ø6 × ø4	ø8 × ø5.7 × 3 m	3.8
	C8	B3	SC1-8	ø8 × ø5.7	ø10 × ø7.2 × 3 m	5.9

2. Open atmospheric exhaust (with exhaust muffler built-in)

Series	Solenoid valve port size	System No.	Speed controller	Cylinder piping pipe length 1 m	End block	Combined effective cross-sectional area (mm²)
MN4G1	C4	A3	SC3W-M5-4	ø4 × ø2.5	N4G1-EX	1.0
	C4	A4	SC3W-6-4	ø4 × ø2.5		1.5
	C6	B4	SC1-6	ø6 × ø4		2.9
MN4G2	C6	B5	SC1-6	ø6 × ø4	N4G2-EX	4.2
	C8	B6	SC1-8	ø8 × ø5.7		5.9

3. Exhaust with silencer attached

Series	Model No.	System No.	Speed controller	Cylinder piping pipe length 1 m	Silencer	Combined effective cross-sectional area (mm²)
MN4G1	C4	A5	SC3W-M5-4	ø4 × ø2.5	SLW-H6	1.0
	C4	A6	SC3W-6-4	ø4 × ø2.5	SLW-H6	1.5
	C6	B7	SC1-6	ø6 × ø4	SLW-H8	2.7
MN4G2	C6	B8	SC1-6	ø6 × ø4	SLW-H8	3.8
	C8	B9	SC1-8	ø8 × ø5.7	SLW-H10	6.0

1. Common exhaust

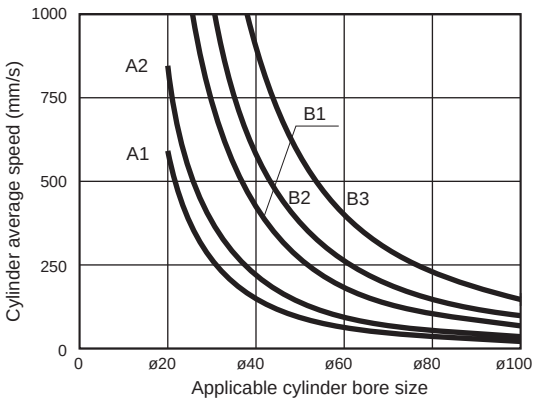

2. Open atmospheric exhaust (with exhaust muffler built-in)

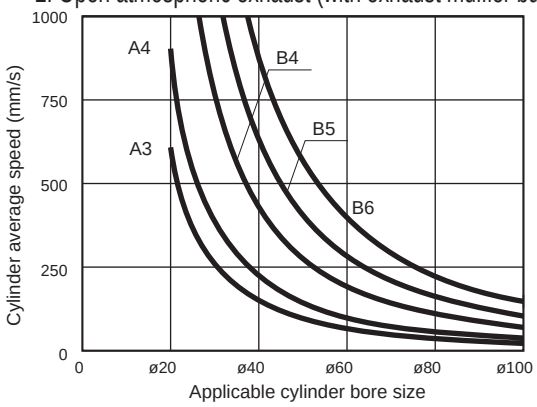

3. Exhaust with silencer attached

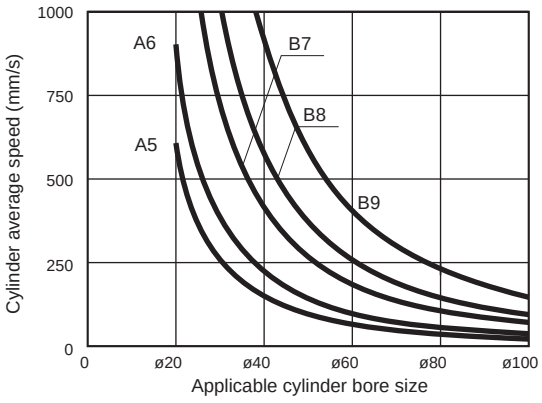

● Silencer

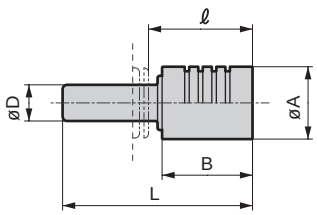

Model No.	D	L	A	B	ℓ
SLW-H6	ø6	41	16	20	23.5
SLW-H8	ø8	42	16	20	23
SLW-H10	ø10	53	20	27	31.5

The device selection guide is useful to make a rough selection of suitable device models.

● Selecting control device

It is assumed that the inside diameter of the cylinder tube to be used and how fast the cylinder operates are predefined as operating conditions. Use the table below as a guideline, select a value of theoretical reference speed of the cylinder.

Cylinder speed mode	Theoretical reference speed (mm/s)
Low speed	250
Medium speed	500
High speed	750
Ultrahigh speed	1,000

Refer to the tables shown in the device selection guide-1 (pages 748, 749), select an inside diameter of the cylinder tube and a standard system No. suitable for the theoretical reference speed.

● Theoretical reference speed: Indicates a level of cylinder speed and is expressed by the following equation. (This value approximately equals to the speed with no load applied. Adding a load will significantly lower the speed.)

$$vo = 1920 \times \frac{S}{A} = 2445 \times \frac{S}{D^2} \quad \text{———— (1)}$$

vo : Theoretical reference speed (mm/s)
A : Cylinder cross-sectional area (cm^2)
S : Combined effective cross-sectional area of the circuit (exhaust side) (mm^2)
D : Cylinder bore (cm)

As expressed in the graph, the theoretical reference speed is a speed in the range of uniform motion.

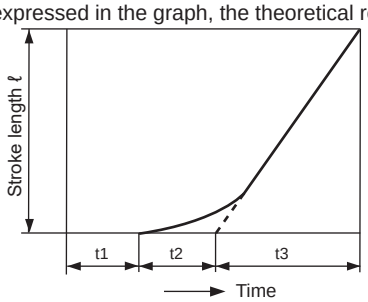

$$vo = \frac{\ell}{t3} \text{ (mm/s)}$$

t1 : Time period until start moving
t2 : Time period of primary delay
t3 : Time period in uniform motion
ℓ : Stroke length

● Note: t1 and t2 change in accordance with the load. With no load applied, this change can be almost neglected.

● Required flow rate: An instantaneous flow rate observed when the cylinder operates at the speed of *vo*, described in the tables below. In the tables, the values are obtained at P = 0.5 MPa. A value of required flow rate is required when selecting clean air system components.

$$Q = \frac{Avo\,(P + 0.101) \times 60}{0.101 \times 10^4} \quad \text{———— (2)}$$

Q: Required flow rate (ℓ/min) (ANR)
P: Supply pressure (MPa)

● Required effective cross-sectional area: A combined effective cross-sectional area for the exhaust side circuit, which required to operate the cylinder at the speed of *vo*. (combined effective cross-sectional area of solenoid valve, speed controller, silencer and piping) Effective cross-sectional area S and sonic conductance C are converted as S ≒ 5.0 ×C.

● Suitable standard system: A most suitable combination of solenoid valve, speed controller, silencer and pipe diameter when operating the cylinder at the speed of *vo*. Combinations described in the tables are applicable for the pipe length of 1 m.

Based on the actual units, required flow rate: Q is expressed by the following equations:

$\frac{P_2 + 0.1}{P_1 + 0.1} \le b$, then the choke flow is expressed by

$$Q = 600 \times C\,(P_1 + 0.1)\sqrt{\frac{293}{273 + t}} \quad \cdots\cdots\cdots\cdots (1)$$

$\frac{P_2 + 0.1}{P_1 + 0.1} > b$, then the subsonic flow is expressed by

$$Q = 600 \times C\,(P_1 + 0.1)\sqrt{1 - \left(\frac{\frac{P_2 + 0.1}{P_1 + 0.1} - b}{1 - b}\right)^2}\sqrt{\frac{293}{273 + t}} \quad \cdots\cdots\cdots\cdots (2)$$

Q : Air flow rate [dm^3/min (ANR)], SI unit dm^3 (cubic decimeter) can be expressed by ℓ (liter). 1 dm^3 = 1 ℓ
C : Sonic conductance [dm^3/(s·bar)]
b : Critical pressure ratio [−]
P_1 : Upstream pressure [MPa]
P_2 : Downstream pressure [MPa]
t : Temperature [°C]

When calculating with Effective cross-sectional area: S, C = S/5 is assigned to C in the equation above.
For the subsonic flow, b = 0.5 is assigned in the equation (2) above.

SCPD3
SCM
SSD2
MDC2
SMG
LCM
LCR
LCG
LCX
STM
STG
STR2
MRL2
GRC
Cylinder switch
MN3E MN4E
4GA/B
M4GA/B
MN4GA/B
F.R (module unit)
Clean F.R
Precision R
Press gauge Diff. press gauge
Electro-pneumatic R
Speed controller
Auxiliary valve
Fitting/ tube
Clean air unit
Pressure sensor
Flow rate sensor
Valve for air blow
Ending

4G Series [Device selection guide-1]

Cylinder bore (mm)	Theoretical reference speed (mm/s)	Required flow rate (ℓmin)(ANR)	Required effective cross-sectional area (mm^2)	Suitable standard system No.			
				Discrete		Manifold	
				Body piping	Base piping	Body piping	Base piping
ø6	(500)	–	(0.1)	A 1	A 2	A 3	A 4
ø10	(500)	–	(0.2)	A 1	A 2	A 3	A 4
ø16	(500)	–	(0.5)	A 1	A 2	A 3	A 4
ø20	250	29	0.5	A 1	A 2	A 3	A 4
	400	46	1.6	B 1	A 2	B 6	A 4
ø25	250	44	0.8	B 1	A 2	A 3	A 4
	400	70	1.9	B 1	B 4	B 6	B 9
ø30	250	64	1.1	B 1	A 2	B 6	A 4
	400	100	2.8	B 1	B 4	B 6	B 9
ø32	250	73	1.3	B 1	A 2	B 6	A 4
	400	120	3.1	B 1	B 4	B 6	B 9
ø40	250	110	2.0	B 1	B 4	B 6	B 9
	400	180	4.9	B 2	B 4	B 7	B 9
ø40	250	110	1.7	B 1	B 4	B 6	B 9
	500	230	3.3	B 2	B 4	B 7	B10
	750	340	5.0	B 3	B 5	B 8	C10
	1000	450	6.6	C 1	C 4	C 7	C10
ø50	250	180	2.6	B 2	B 4	B 7	B10
	500	350	5.2	B 3	C 4	B 8	C10
	750	530	7.7	C 1	C 5	C 7	C11
	1000	710	10.4	C 2	C 5	C 8	C12
ø63	250	280	4.1	B 3	B 5	B 8	B10
	500	560	8.2	C 2	C 4	C 8	C11
	750	840	12.3	C 3	C 5	C 9	C12
	1000	1,100	16.4	–	C 6	–	–
ø75	250	400	5.8	C 1	C 4	C 7	C10
	500	800	11.6	C 3	C 5	C 9	C11
	750	1,200	17.4	–	–	–	–
	1000	1,600	23.2	–	–	–	–
ø80	250	450	6.6	C 1	C 4	C 7	C10
	500	910	13.2	C 3	C 6	–	C12
	750	1,400	19.8	–	–	–	–
	1000	1,800	25.4	–	–	–	–
ø100	250	710	10.3	C 2	C 5	C 8	C11
	500	1,400	20.6	–	–	–	–
	750	2,100	30.9	–	–	–	–
	1,000	2,800	41.2	–	–	–	–

*** Refer to pages 744, 745 for system No.**

[Effective cross-sectional area]

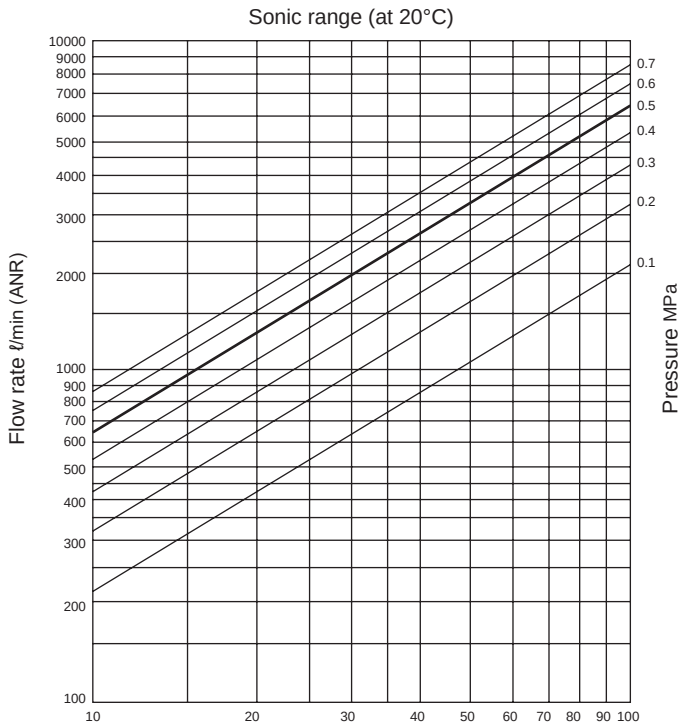

(If the effective cross-sectional area is expressed with $\times 10^{-1}$ or $\times 10^{n}$, the flow rate should be multiplied by the same factor.)

[Clean air system components]

Clean air system components

Product name	Model No.	Port size	Max. flow rate (ℓmin, atmospheric pressure equivalent)
F·R·L kit	C1000-6-W	Rc1/8	450
	C1000-8-W	Rc1/4	630
	C3000-8-W	Rc1/4	1280
	C3000-10-W	Rc3/8	1750
	C4000-8-W	Rc1/4	1430
	C4000-10-W	Rc3/8	2400
	C4000-15-W	Rc1/2	3000
F·R unit	W1000-6-W	Rc1/8	830
	W1000-8-W	Rc1/4	1150
	W3000-8-W	Rc1/4	2150
	W3000-10-W	Rc3/8	2430
	W4000-8-W	Rc1/4	2500
	W4000-10-W	Rc3/8	4350
	W4000-15-W	Rc1/2	4750
Air filter (F)	F1000-6-W	Rc1/8	460
	F1000-8-W	Rc1/4	610
	F3000-8-W	Rc1/4	1230
	F3000-10-W	Rc3/8	1500
	F4000-8-W	Rc1/4	1320
	F4000-10-W	Rc3/8	2140
	F4000-15-W	Rc1/2	3000
Regulator (R)	R1000-6-W	Rc1/8	770
	R1000-8-W	Rc1/4	1350
	R3000-8-W	Rc1/4	2000
	R3000-10-W	Rc3/8	2600
	R4000-8-W	Rc1/4	2500
	R4000-10-W	Rc3/8	4400
	R4000-15-W	Rc1/2	5000
Lubricator (L)	L1000-6-W	Rc1/8	550
	L1000-8-W	Rc1/4	700
	L3000-8-W	Rc1/4	1100
	L3000-10-W	Rc3/8	2250
	L4000-8-W	Rc1/4	1000
	L4000-10-W	Rc3/8	1700
	L4000-15-W	Rc1/2	2700

Note) Max. flow rate: For FRL, FR and R, primary pressure: 0.7 MPa, setting pressure: 0.5 MPa, pressure drop: 0.1 MPa are applied. For Air filter, flow rates at primary pressure: 0.7 MPa, pressure drop: 0.02 MPa; for Lubricator, primary pressure: 0.5 MPa, pressure: 0.03 MPa.

MN4G Series [Device selection guide-1]

Cylinder bore (mm)	Theoretical reference speed (mm/S)	Required flow rate (ℓmin)(ANR)	Required effective cross-sectional area (mm^2)	Suitable standard system No.		
				1. Common exhaust	2. Open atmospheric exhaust	3. Exhaust with silencer attached
ø6	(500)	–	(0.1)	A 1	A 3	A 5
ø10	(500)	–	(0.2)	A 1	A 3	A 5
ø16	(500)	–	(0.5)	A 1	A 3	A 5
ø20	250	29	0.5	A 1	A 3	A 5
	400	46	1.6	B 1	B 4	B 7
ø25	250	44	0.8	A 2	A 4	A 6
	400	70	1.9	B 1	B 4	B 7
ø30	250	64	1.1	A 2	A 4	A 6
	400	100	2.8	B 1	B 4	B 7
ø32	250	73	1.3	A 2	A 4	A 6
	400	120	3.1	B 2	B 4	B 8
ø40	250	110	2.0	B 1	B 4	B 7
	400	180	4.9	B 3	B 6	B 9
ø40	250	110	1.7	B 1	B 4	B 7
	500	230	3.3	B 2	B 5	B 8
	750	340	5.0	B 3	B 6	B 9
	1000	450	6.6	–	–	–
ø50	250	180	2.6	B 1	B 1	B 7
	500	350	5.2	B 3	B 6	B 9
	750	530	7.7	–	–	–
	1000	710	10.4	–	–	–
ø63	250	280	4.1	B 2	B 5	B 8
	500	560	8.2	–	–	–
	750	840	12.3	–	–	–
	1000	1,100	16.4	–	–	–
ø80	250	450	6.6	–	B 6	–
	500	910	13.2	–	–	–
	750	1,400	19.8	–	–	–
	1000	1,800	25.4	–	–	–

*** Refer to page 746 for system No.**

[Effective cross-sectional area]

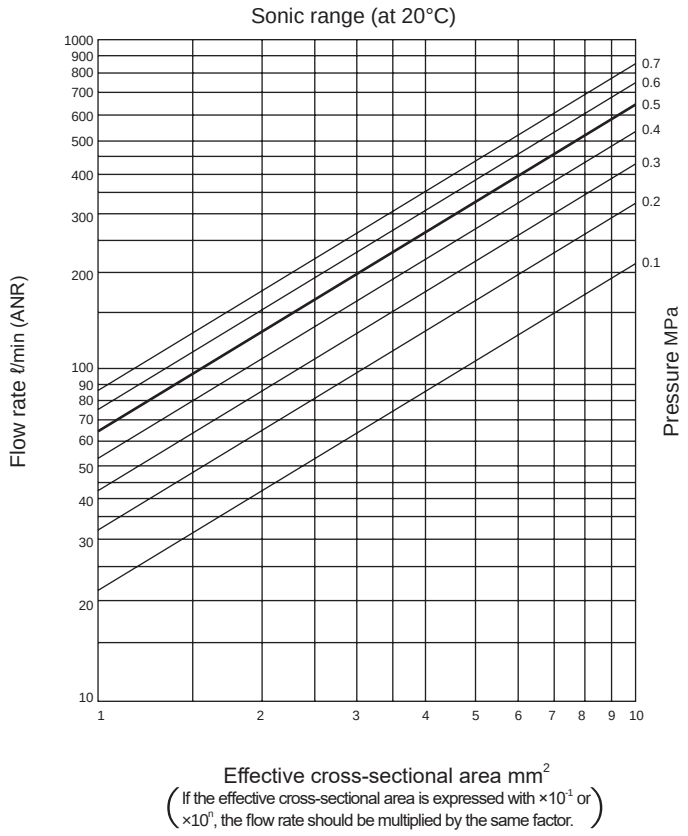

[Clean air system components]

Clean air system components

Product name	Model No.	Port size	Max. flow rate (ℓmin, atmospheric pressure equivalent)
F·R·L kit	C1000-6-W	Rc1/8	450
	C1000-8-W	Rc1/4	630
	C3000-8-W	Rc1/4	1280
	C3000-10-W	Rc3/8	1750
	C4000-8-W	Rc1/4	1430
	C4000-10-W	Rc3/8	2400
	C4000-15-W	Rc1/2	3000
F·R unit	W1000-6-W	Rc1/8	830
	W1000-8-W	Rc1/4	1150
	W3000-8-W	Rc1/4	2150
	W3000-10-W	Rc3/8	2430
	W4000-8-W	Rc1/4	2500
	W4000-10-W	Rc3/8	4350
	W4000-15-W	Rc1/2	4750
Air filter (F)	F1000-6-W	Rc1/8	460
	F1000-8-W	Rc1/4	610
	F3000-8-W	Rc1/4	1230
	F3000-10-W	Rc3/8	1500
	F4000-8-W	Rc1/4	1320
	F4000-10-W	Rc3/8	2140
	F4000-15-W	Rc1/2	3000
Regulator (R)	R1000-6-W	Rc1/8	770
	R1000-8-W	Rc1/4	1350
	R3000-8-W	Rc1/4	2000
	R3000-10-W	Rc3/8	2600
	R4000-8-W	Rc1/4	2500
	R4000-10-W	Rc3/8	4400
	R4000-15-W	Rc1/2	5000
Lubricator (L)	L1000-6-W	Rc1/8	550
	L1000-8-W	Rc1/4	700
	L3000-8-W	Rc1/4	1100
	L3000-10-W	Rc3/8	2250
	L4000-8-W	Rc1/4	1000
	L4000-10-W	Rc3/8	1700
	L4000-15-W	Rc1/2	2700

Note) Max. flow rate: For FRL, FR and R, primary pressure: 0.7 MPa, setting pressure: 0.5 MPa, pressure drop: 0.1 MPa are applied.
For Air filter, flow rates at primary pressure: 0.7 MPa, pressure drop: 0.02 MPa; for Lubricator, primary pressure: 0.5 MPa, pressure: 0.03 MPa.

Safety Precautions

Always read this section before use.
Refer to 328 for general precautions for using valves.

3, 5 port pilot operated valve 4G*/MN4G* Series

Design & selection

1. Surge suppressor

CAUTION

■ "The surge suppressor enclosed with the solenoid valve is used to protect the output contact driving the solenoid valve. There is no significant protection for the other peripheral devices, and devices could be damaged or malfunction by the surge. Surge generated by other devices could be absorbed and cause damage such as burning. Note the following points."

● "The surge suppressor regulates the solenoid valve surge voltage that can reach a few hundred volts to a lower voltage level that the output contact can tolerate. Depending on the output circuit that is being used, this may be insufficient, resulting in damage or malfunction. Before use, check the surge voltage limiting level of your solenoid valve, and the output component's proof pressure and circuit composition or return delay time, in order to determine whether or not to use the component. If necessary, implement a separate anti-surge protection. 4G Series solenoid valve with surge suppressor can also suppress inverse voltage surge that occurs when the product is turned OFF to the level shown in the table below.

Voltage specification	Reverse voltage value when power turned OFF
3 VDC	Approx. 6.2 V
5 VDC	Approx. 13 V
12 VDC	Approx. 27 V
24 VDC	Approx. 47 V
When Option "S", "E" selected	Approx. 1 V

● If the output unit is NPN, always connect a contact protection circuit or select option S in order to avoid the risk of surge voltage equivalent to the sum of the voltage shown in the table above and the power supply voltage being applied to the output transistor.

[Example of output transistor protective circuit installation 1]

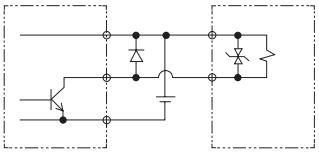

Programmable controller side — Solenoid valve side

[Example of output transistor protective circuit installation 2]

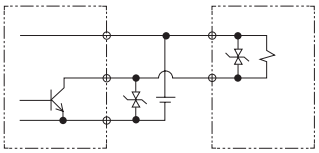

Programmable controller side — Solenoid valve side

● "If another device or solenoid valve is connected in parallel to the solenoid valve, the inverse voltage surge generated when the solenoid valve is OFF would apply to those devices. Even in the case of a solenoid valve for 24 VDC with surge suppressor, surge voltage may reach several tens of volts for some models, and this inverse voltage may cause damage to or malfunction in the other parallel-connected components. Avoid parallel connection with components that are vulnerable to inverse voltage (example LED indicator lights). Furthermore, in the case of operating multiple solenoid valves in parallel, surge from another solenoid valve may flow into the surge suppressor of a solenoid valve with surge suppressor, and with certain current value, cause that surge suppressor to burn out. When driving several solenoid valves with surge suppressors in parallel, surge current could concentrate at the surge suppressor with the lowest limit voltage and cause similar burning. Due to variations in surge suppressor limiting voltages that also exist among solenoid valves of the same model No., in the worst case the surge suppressor may burn out. Avoid parallel operation of multiple solenoid valves.

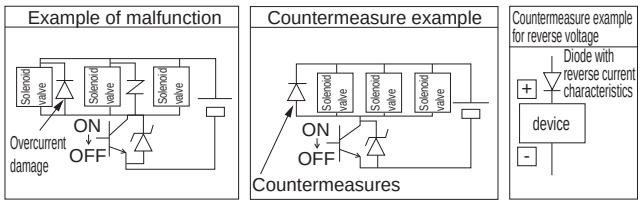

● "The surge suppressor incorporated in the solenoid valve may often be short-circuited if it is damaged by an overvoltage or overcurrent from the other solenoid valves. For that reason, large current flows when the output is turned ON after the damage is incurred. In the worst case, this may result in damage/fire in the output circuit and/or solenoid valve. Do not continue energizing in a state of malfunction. Additionally, to prevent large currents from continuing to flow, connect an overcurrent protection circuit to the power supply and drive circuit, or use a power supply with overcurrent protection.

2. Surgeless

■ The surgeless has a built-in diode to reduce the solenoid valve surge voltage to around 1 V. There is no polarity.

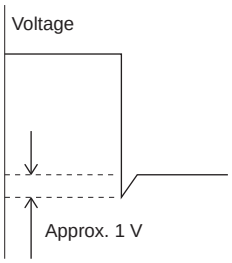

3. Low exoergic/energy saving circuit

■ With the type with low exoergic, energy-saving circuit, the PWM circuit is built into the solenoid valve. The power when the coil is sucked and held is lowered with this structure. As a result, power consumption is reduced to 1/4 comparing to standard products. There is no polarity.

[Specifications for low exoergic, energy saving]

Descriptions		Current A	Power consumption W
Starting	12 VDC	0.033	0.4
	24 VDC	0.017	0.4
Holding	12 VDC	0.017	0.1
	24 VDC	0.008	0.1

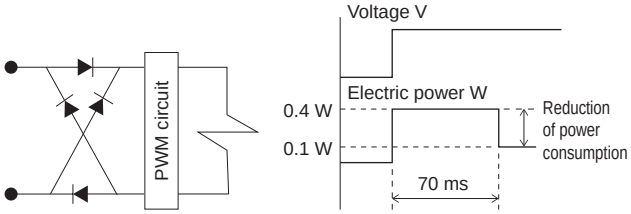

CAUTION

- Do not use this valve in an environment where the vibration and impact exceeding specifications are made. Doing so may result in a valve malfunction.
- The valve cannot be kept energized if instantaneous power outage of 30 ms or less occurs on the power source driving the solenoid valve. If instantaneous power outage of 30 ms or less occurs on the power source driving the solenoid valve due to a disturbance, cut the power off for 50 ms or longer to turn the solenoid valve on again.
- Do not use the device with the voltage increasing gradually. If doing so, the valve will not operate.

4. AC voltage specifications

CAUTION

- AC voltage specification has a built-in all wave rectified circuit. If an SSR is used to turn the solenoid valve ON and OFF, depending on the type of SSR, a return failure may occur to the solenoid valve. Use caution when selecting SSRs. (It is recommended to consult with the relay or sequencer manufacturer.)

5. When using the product in combination with low sliding cylinders

- Malfunctions could occur because of the exhaust pressure. Contact CKD.

6. Exhaust check valve

CAUTION: The exhaust check valve is a check valve. Note that when operating the cylinder rod directly without pressurized, the check valve opens and the cylinder rod does not move.

Generally, the double acting cylinder connected at the manifold to single acting cylinders or ABR connection valves may malfunction when it is adversely affected by the exhaust pressure coming around due to the operation of other cylinders. For the manifold of 4G Series, the "exhaust check valve" integrated for preventing this malfunction can be selected except for all ports closed valve and PAB connection valve. When using components that are affected by a small amount of leakage or pressure of low sliding cylinders, it may not function properly.

Example of pneumatic pressure system that may malfunction

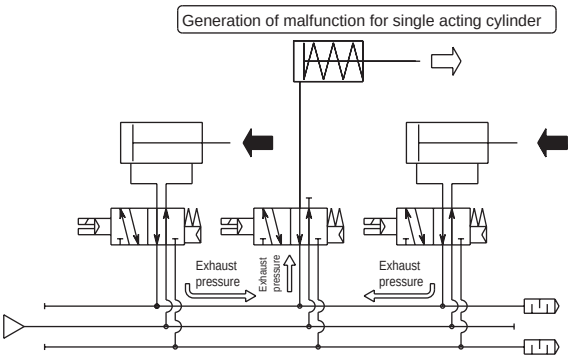

4G Series pneumatic pressure system

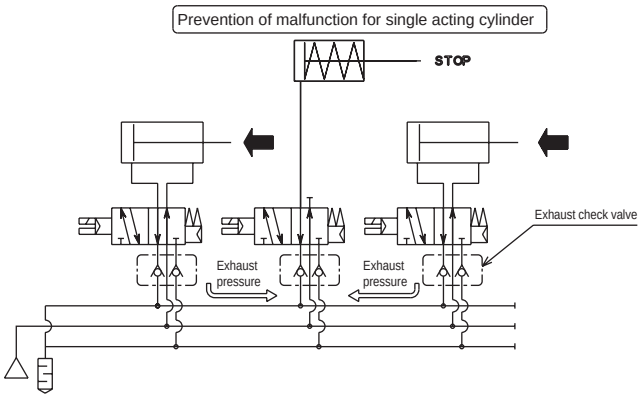

Internal structure

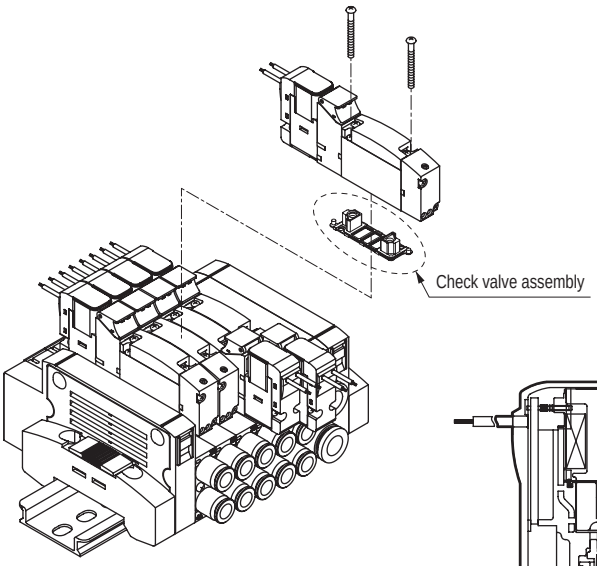

Standard specifications of check valve

Model No.		Flow path switching	Option (H) selection
4G	MN4G		
3GA*19R	3GA*10R	2-position single NC	Selected
3GA*119R	3GA*110R	2-position single NO	Selected
3G A/B*669R	3G A/B*660R	Dual 3 port valve integrated NC/NC	Selected
4G A/B*19R	4G A/B*10R	2-position single	Selected
4G A/B*29R	4G A/B*20R	2-position double	Selected
4G A/B*39R	4G A/B*30R	3-position all ports closed	None
4G A/B*49R	4G A/B*40R	3-position ABR connection	Selected
4G A/B*59R	4G A/B*50R	3-position PAB connection	None

Note: Because 3 position all ports closed and PAB connection are not adversely affected by the exhaust pressure coming around from other cylinders at the neutral position, installation of the check valve is not required.

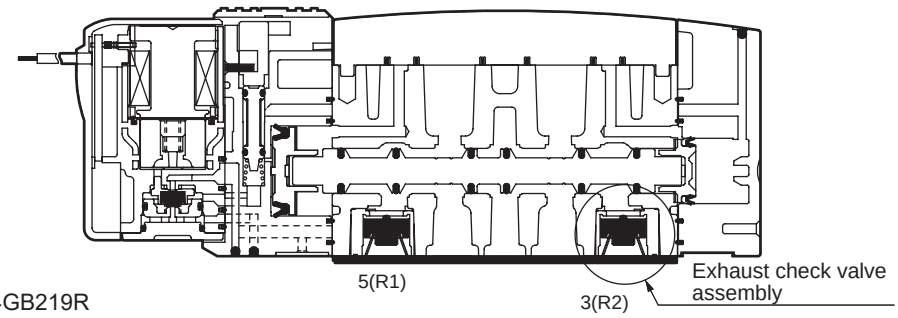

This figure is for 4GB219R

SCPD3
SCM
SSD2
MDC2
SMG
LCM
LCR
LCG
LCX
STM
STG
STR2
MRL2
GRC
Cylinder switch
MN3E MN4E
4GA/B
M4GA/B
MN4GA/B
F.R (module unit)
Clean F.R
Precision R
Press gauge Diff. press gauge
Electro-pneumatic R
Speed controller
Auxiliary valve
Fitting/ tube
Clean air unit
Pressure sensor
Flow rate sensor
Valve for air blow
Ending

Mounting, installation and adjustment

1. External pilot (K) piping port

⚠CAUTION

■ Metal base 4G$^{A}_{B}$ Series

● The external pilot (K) has a separate pilot air exhaust. M5 screw ports are used to supply and exhaust the pilot air, so check that the piping connection position is correct. Improper wiring could result in operation failures.

Port indication

Applications		Indication (ISO standards)
Pilot air	Supply port	12/14
	Exhaust port	82/84

Discrete base piping

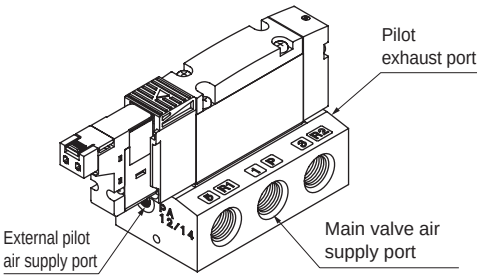

The port position of external pilot air supply port is at the left side when the valve air supply port is at front side.

Manifold

M4G1

The port position of external pilot air supply port is on the top surface of the manifold. There are 2 positions on the either side.

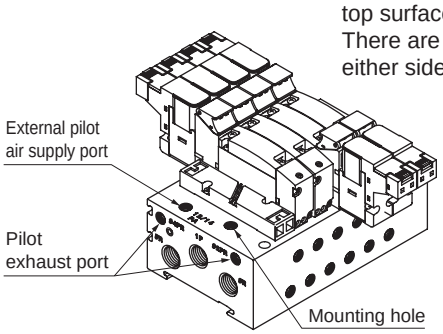

M4G2/3

The port position of external pilot air supply port is at the far side from A/B port. There are 2 positions on the either end surface.

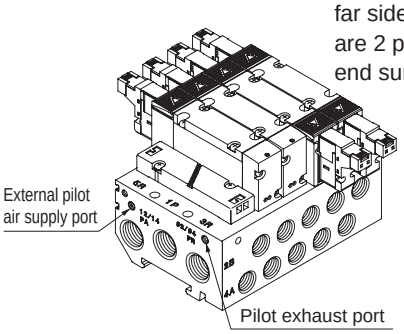

■ Block manifold MN4G$^{A}_{B}$ Series

● The external pilot (K) has a separate pilot air supply. ø 6 push-in fitting is used to supply the pilot air, so be careful that the piping connection position is correct. Improper wiring could result in operation failures.

Port indication

Applications		Indication (ISO standards)
Pilot air	Supply port	12/14

* A/B ports and the R port cannot be pressurized.

MN4G2

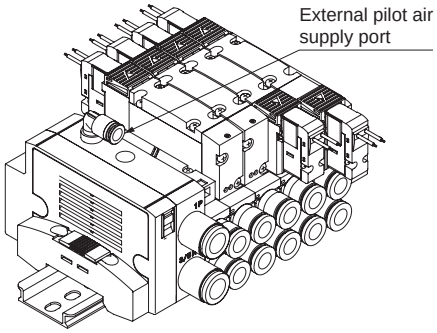

The external pilot air supply port is the ø6 push-in fitting on the top of the supply/exhaust block.

■ Note supply pressure for dual 3 port valve integrated

● The valving element of dual 3 port valve integrated is operated with the main (P port) supply pressure.

(1) Check that the main pressure (P port) is not higher than the pilot pressure (PA port).

(2) Check that the main pressure (P port) does not drop below 0.2 MPa.

Mounting, installation and adjustment

2. How to install discrete body piping (A)

⚠ CAUTION

■ When directly installing the manifold

● The discrete body piping 4GA Series can be installed using (a) through hole or (b) screw hole. When using the screw holes, be careful about the tightening torque.

Screw hole Tightening torque 0.7 to 1.2 N·m

4GA1 Series
(a) 2 positions for through hole

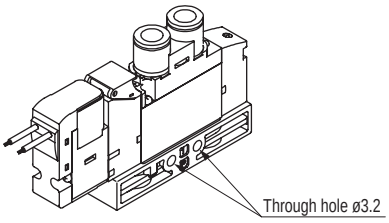

4GA2 Series
(a) Through hole
(b) 4 positions for common use of screw hole

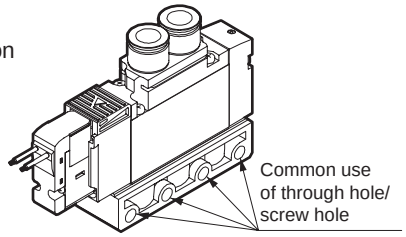

4GA3 Series
(a) Through hole
(b) 2 positions each for exclusive use of screw

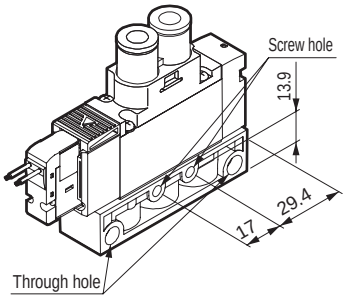

Mounting hole shape

	4GA2	4GA3	
	(a) (b) Common use	(a) Through hole	(b) Screw hole
Sectional view of mounting hole	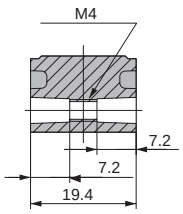	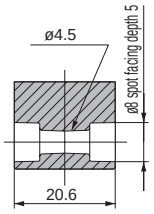	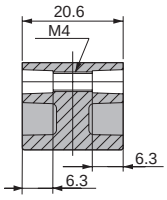

■ When installing the manifold with mounting plate (P)

● Mounting method of the mounting plate (P) for discrete body piping differs depending on the position of single, double and 3-position. Be careful for the mounting position and direction since damage could be occurred if incorrectly installed.

■ How to mount mounting plate (P)

● Grommet lead wire and E connector (DC voltage)

4GA1

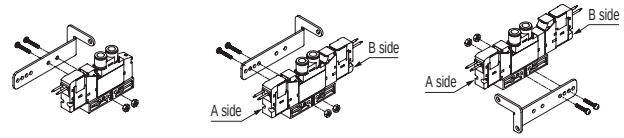

4GA2

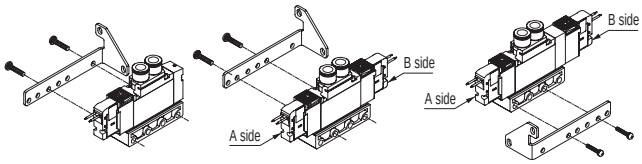

4GA3

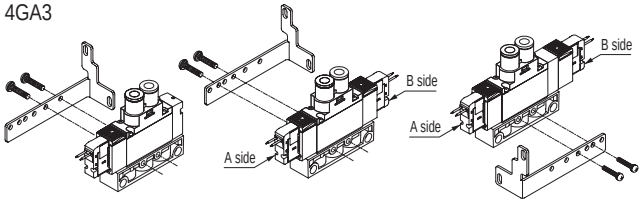

● DIN terminal box and E connector (AC voltage)

4GA1

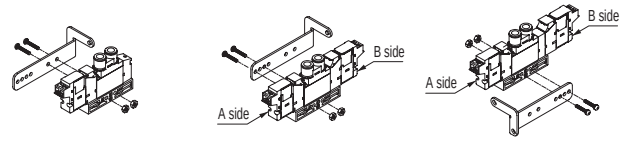

4GA2

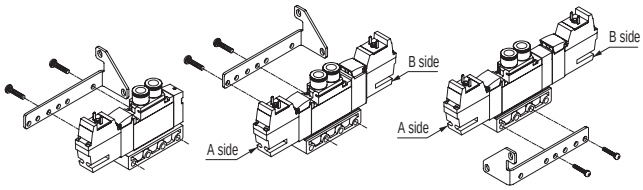

4GA3

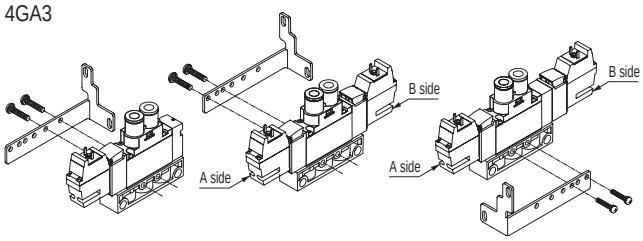

Mounting (P) kit

	Kit model No.	Accessory part
4GA1	4G1R-MOUNT-PLATE-KIT-P70	Mounting plate, 2 set screws, 2 nuts
4GA2	4G2R-MOUNT-PLATE-KIT-P70	Mounting plate, 2 set screws
4GA3	4G3R-MOUNT-PLATE-KIT-P70	Mounting plate, 2 set screws

Mounting, installation and adjustment

3. How to install manifold (Metal base 4G$^{A}_{B}$ Series)

⚠ CAUTION

■ When directly installing the manifold

● For Mounting of the M4G2/3 Series, there are 2 methods of tightening the manifold with bolts after passing them through the upper side of the manifold base or after inserting them from the back side.
When using the female screw as shown in the figure below, check the thread depth, select the mounting bolt that can screw in for 10 threads and over, and be careful for the tightening torque. The screw could be damaged if incorrectly installed.

Mounting method
M4G2/3 Series

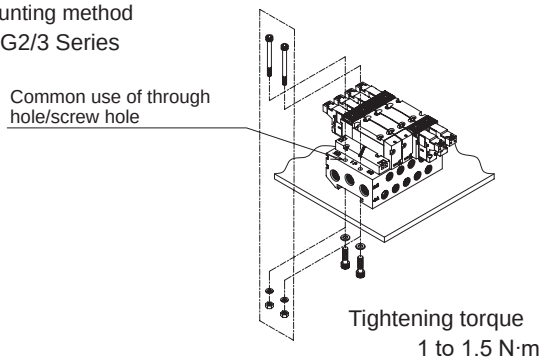

Mounting hole shape (sectional view)

	Standard manifold (internal pilot)		External pilot
	M4GA (direct piping)	M4GB (base piping)	M4G-K
M4G2	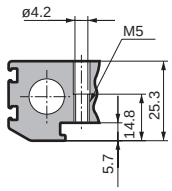	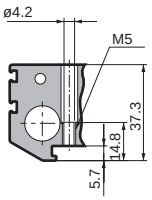	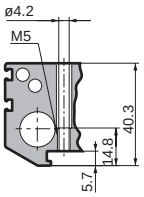
M4G3	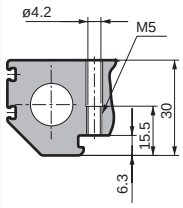	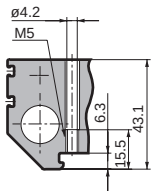	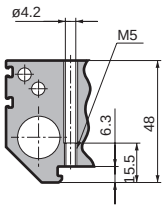

■ When mounting the manifold with DIN rail
M4G1, 2, 3

● The manifold of direct mounting specification can be changed to that of DIN rail mounting specification for its use. Be careful that the manifold could drop off or be damaged if incorrectly installed. If the manifold weighs more than 1 kg, or when using in an environment with vibration or impact, fix the DIN rail onto the surface at 50 to 100 mm intervals, and confirm that there is no problem with mounting before starting operation. Use the individual specifications to calculate the weight.
(CAUTION: Only for M4GB1 (page 523), its dedicated base is provided with either of direct mount or DIN rail mount. The direct mounting cannot be changed to the DIN rail mounting, but the direct mounting type can be directly mounted.)
The upper limit of station No. for DIN rail mounting is 16.

Mounting, installation and adjustment

■ How to mount DIN rail

● Only for M4GB1, its dedicated base is provided with either of direct mount or DIN rail mount type. The direct mounting cannot be changed to the DIN rail mounting.

Tightening torque 0.3 to 0.5 N·m

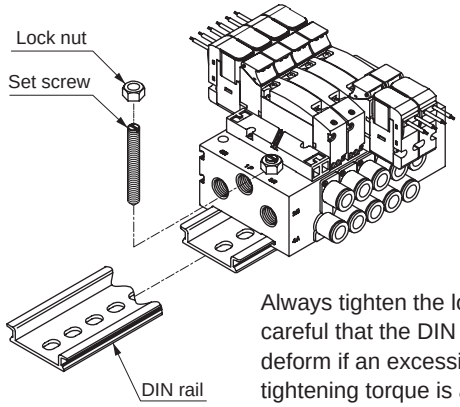

Always tighten the lock nut. Be careful that the DIN rail may deform if an excessive tightening torque is applied.

Mounting hole shape (sectional view)

Internal pilot		External pilot
M4GA/D1 M4GB/E1 (DIN rail mount)	M4GB/E1 (Direct mount)	M4GA1-K M4GB1-K
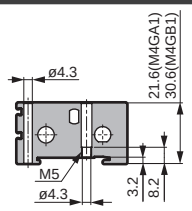	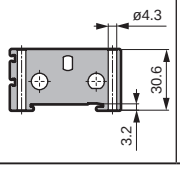	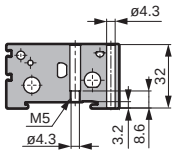

M4G2 Series
M4G3 Series
Tightening torque 0.7 to 1.0 N·m

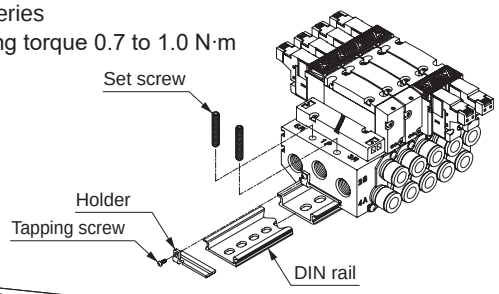

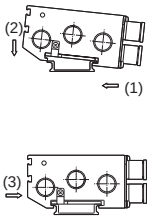

1. Attach the holder (Tightening with tapping screw for preventing drop off)
2. Temporally set the set screw
3. Catch the jaws into the DIN rail in the order of (1) (2).
4. Apply pushing force to the direction of (3).
5. Tighten the set screw.

DIN rail kit

	Model No.	Content
M4G1	4GA1R-BAA length - Option D-P70	DIN rail, 2 set screws, 2 lock nuts
	4GB1R-BAA length - Option D-P70	
M4G2	4GA2R-BAA length - Option D-P70	DIN rail/holder 2 Tapping screw 2, set screw 4
	4GB2R-BAA length - Option D-P70	
M4G3	4GA3R-BAA length - Option D-P70	
	4GB3R-BAA length - Option D-P70	

If the DIN rail is not required, specify the length with "0". When using the kit for a manifold base for external pilot, specify the option with "K".
For setting the DIN rail length, refer to dimensions and DIN rail length quick reference table (page 701) for the manifold in use.

4. How to install manifold (Block manifold)

⚠CAUTION

■ Mounting orientation

● The Block manifold is mounted on a DIN rail. If the manifold's total weight exceeds 1 kg, or when using the MEVT in an environment with vibration or impact, fix the DIN rails on the mounting surface at pitch of 50 to 100 mm. Check that there are no problems with mounting.
Although there is no restriction in mounting direction and orientation, attention should be paid to loose set screws caused by resonance due to vibration that may cause drop of manifold during operation.

● How to mount and remove manifold
Removal
Loosen the four DIN rail fixing screws (two each on left/right).
Mounting
1. Catch the jaws into the DIN rail in the order of (1) (2).
2. Push the operation button to the direction indicated by (3).
3. While holding down so that there is no gap between blocks, tighten DIN rail set screws. (recommended tightening torque 1.2 to 1.6 N·m).

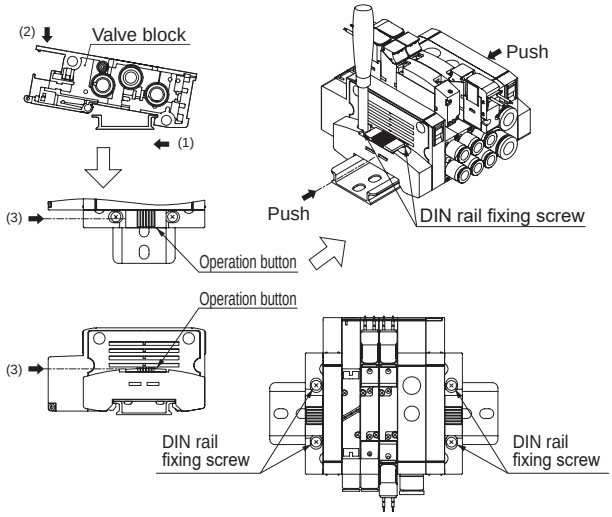

5. Lead wire connection

⚠CAUTION

■ Lead wire standards differ depending on the type of electrical connections. Connect wires according to each lead wire to be used.

Electrical connection code	Content	Conductor size	Conductor sectional area	Outer diameter of insulator	Outer diameter of covering
Blank	Grommet lead wire	AWG#26	0.13 equiv.	1.3	-
E□	E connector (with lead wire)	AWG#26	0.13 equiv.	1.3	-
E□J	EJ connector	AWG#24	0.16 equiv.	1.14	3.7

When installing the manifold and making electrical connections, check that tension by lead wires is not applied to the solenoid valve coil.

Mounting, installation and adjustment

6. How to use the E connector

⚠ CAUTION

■ The E connector has top and side connecting portions to which sockets can be connected either from the top or side directions. The socket assembly is connected from the side direction at shipment. Select the connection direction based on the mounting environment.

■ How to mount and remove socket

- When mounting the socket, hold the lever and socket with fingers and insert straight into the square window on the connector body. Align the lever jaw with the groove on the connector body and lock it. When mounting from the top, position the socket so that the lever faces the front. When mounting from the side, position the socket so that the lever is in an upward direction.
- When pulling out the socket, press down the lever to release its jaw from the groove, then pull straight out.

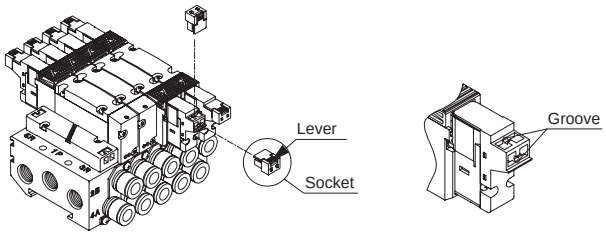

■ How to connect lead wire

- Strip about 3 mm of the lead wire end. Align the end of core wires, insert them into the contact terminal, and crimp with a crimp tool. When crimping, check that both the sheath and core wires are held, and 0 to 0.5 mm of the core wire end is visible.
- After crimping, position the contact terminal as shown below, and insert into the square window on the socket. The terminal locks when it is inserted to the end. After inserting, pull the terminal lightly to check that it is locked.

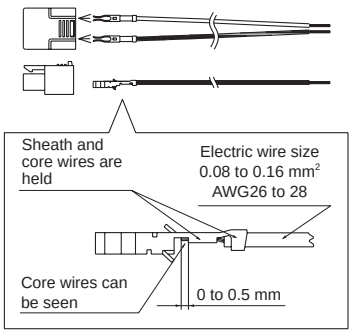

7. How to use E □ J connector

⚠ CAUTION

■ Use the lead wire with limitation of bending dimension as shown in the figure right.

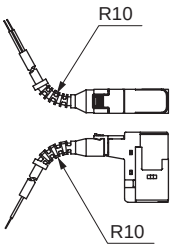

8. How to use the A connector

⚠ CAUTION

■ The A connector is a connector for exclusive use of reduced wiring manifold mounting, which can be connected from the bottom direction. When mounting or removing the socket, similar attention as how to use E connector is required.

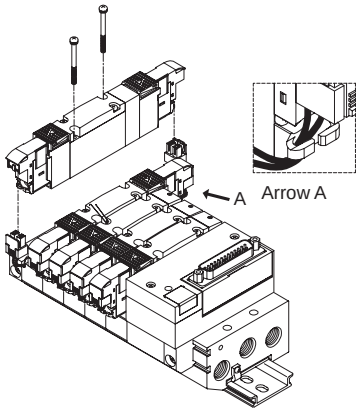

9. DIN terminal box

⚠ WARNING

■ As there is a risk of electric shock when assembling or disassembling the terminal box, perform the assembly and/or disassembly after turning OFF the power supply.

⚠ CAUTION

■ Disassembly

- Loosen screw (1) and pull cover (2) in the direction of screw (1) to remove the connector from coil assembly (12).
- Pull out screw (1) from cover (2).
- Notch (9) (next to the GDSN mark) can be found at the bottom of terminal block (3). Insert a compact flathead screwdriver in the gap between housing (2) and terminal block (3) and pry to remove terminal block (3) from cover (2) (Refer to Fig. 1). Remove the terminal block without applying excessive force. There is a risk of damage.
- Remove cable terminal block (4) and take out washer (5) and rubber packing (6).

Fig. 1 Exploded view

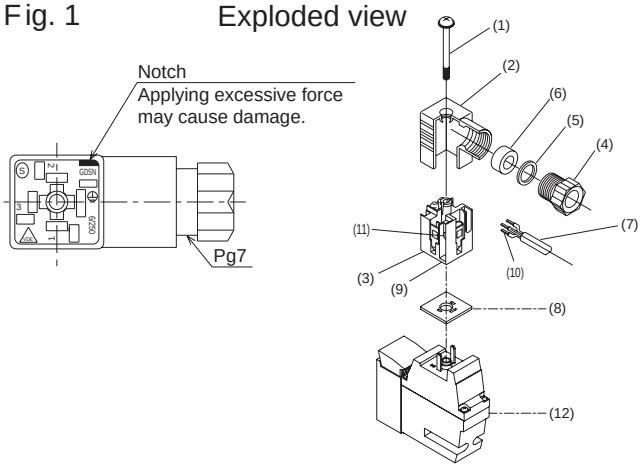

Mounting, installation and adjustment

■Wiring

● Wiring preparation

- The applicable dimensions for cable ⑦ are the VCTF2(3) core (ø3.5 to 7) defined in JIS C3306.
- The length of the lead wire stripping of the cable is 10 mm.
- Both stranded wires and solid wires can be used for wiring.
- When using a stranded wire, avoid connecting a pre-soldered wire.
- When using a crimp sleeve ⑩ at the end of the twisted wire, select H0.5/6 (0.3 to 0.5 mm^2) or H0.75/6 (0.75 mm^2) made by Weidmüller Japan, or an equivalent product. Crimp sleeves are not included.

● Wiring

- Pass cable ⑦ through cable gland ④, washer ⑤, and rubber packing ⑥ in this order, and insert it into cover ②.
- Connect it to terminals 1 and 2. There is no polarity.
- The recommended tightening torque is 0.2 to 0.25 N·m.
- Be sure to lay ground wiring for AC. However, DC type does not require ground wiring.

■Assembly

● Set the wired terminal block ③ on cover ②. (Push in until it clicks.)

* The terminal block can be set in any of the four different directions (Fig.2).

● Insert rubber packing ⑥, and washer ⑤, in this order into the cable through hole in cover ②, and securely tighten cable gland ④.

Remarks: The recommended tightening torque for the cable gland is 1.0 to 1.5 N·m.
Pull the cable to check that it does not become loose.

● Place gasket ⑧ between the bottom part of terminal block ③ and the plug of the coil assembly ⑫, insert the connector, insert screw ② from over the cover ① and tighten it.

Remarks: The recommended tightening torque for screws is 0.4 to 0.45 N·m.

Fig. 2

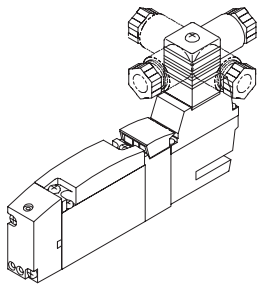

■Terminal box

● When not using CKD's terminal box, make sure to use a EN175301-803 Type C (DIN 43650-C) compliant product. For the dimensions of solenoid valve side (below), select the terminal box of 15.7 or less.

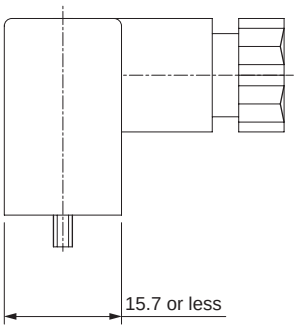

10. Port filter

⚠CAUTION

■The port filter prevents the entry of foreign matter, and prevents problems from occurring in the valve. As this does not improve the quality of the compressed air, read Warnings and Precautions on Intro Pages 61 to 68, then mount, install, and adjust the filter accordingly.
Do not detach or press down the port filter forcibly. The filter could deform, causing problems. If contaminants and foreign matters are found on the filter surface, blow them lightly, or remove them by tweezers, etc.

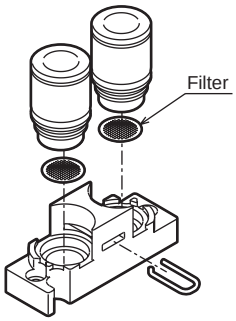

Example of A/B port filter option combination

M4G Series

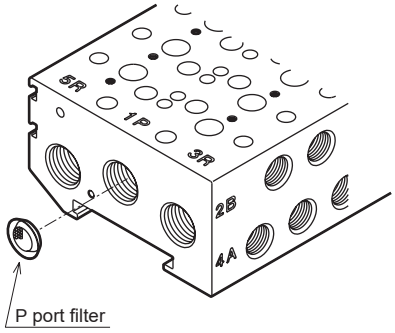

P port filter (standard) example of embedding

MN4G Series

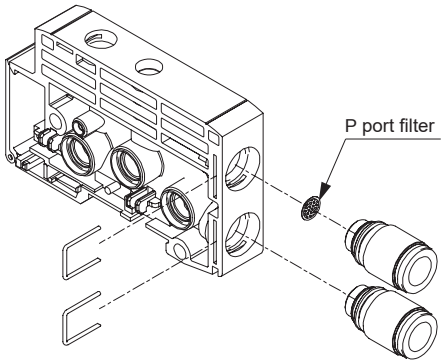

P port filter (standard) example of embedding

Use/maintenance

1. Continuous energizing

⚠ CAUTION

■ When using in a continuously energized state for long periods, use the low exoergic/energy saving type.

■ If a valve other than the low exoergic/energy saving type is used in a continuously energized state for long periods, the valve performance may deteriorate more quickly.
Furthermore, use caution under the following working conditions likewise.
- When the energized time exceeds non-energized time in intermittent operation
- When one energizing session exceeds 30 minutes in intermittent operation

Give sufficient consideration to heat dissipation when installing the product.

■ When using the AC voltage in a continuously energized state, the temperature of the coil's outer surface will be high. It may cause burns. Do not touch it when it is energized.

2. Manual ocerride

⚠ WARNING

■ The 4G Series is a pilot operated solenoid valve. If air is not supplied to the P port, the main valve will not be switched even if the manual override is operated.

■ Manual override protective cover is provided as standard. The protective cover is closed when shipped. Therefore, the manual override device cannot be seen when delivered. Open the protective cover to operate the manual override. Note that the protective cover will not close unless the locking manual override is released.

■ Manual override is used for both non-locking and locking. Holding down and turning the button locks the valve. For locking, be sure to press down and turn. If manual override is turned without being pressed down, it could be damaged or air could leak.

■ Opening and closing the manual protective cover
Do not excessively force the manual protective cover when opening and closing it. Excessive external force could cause failures. (Below 5 N)

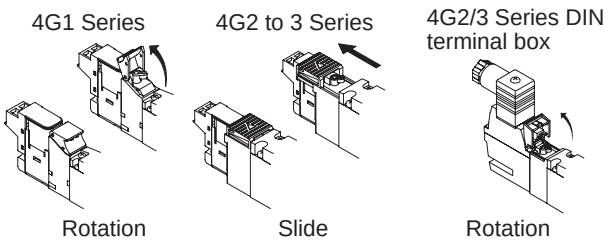

■ How to operate manual override

- Push non-locking operation
  Push straight in the direction of the arrow until it stops
  Release to cancel.

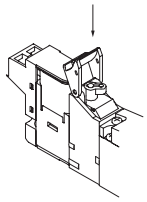

- Push & locking operation
  Push manual override and turn 90° in the direction of the arrow.
  The function is not canceled even when the button is released.

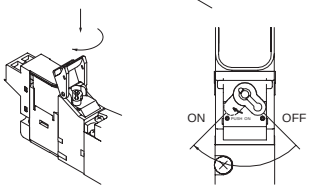

■ When conducting manual operations, make sure that there are no people near the operating cylinder.

During use & maintenance

3. How to replace cartridge fitting

⚠ CAUTION

■ Check procedures before changing the push-in fitting size. If installed incorrectly, or if the tightening of the mounting screw is insufficient, air leakage could occur.

■ Body piping (A)

4G1, 2, 3

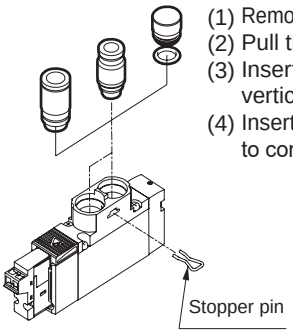

(1) Remove the stopper pin with a screwdriver.
(2) Pull the joint out.
(3) Insert the joint for replacement vertically until it reaches the back.
(4) Insert the stopper pin. Pull on the fitting to confirm that it is properly installed.

	Size	Tightening torque (N·m)
4G1	M1.7	0.18 to 0.22
4G2	M2.5	0.25 to 0.30
4G3	M3	0.6 to 0.7

■ Base piping (B)

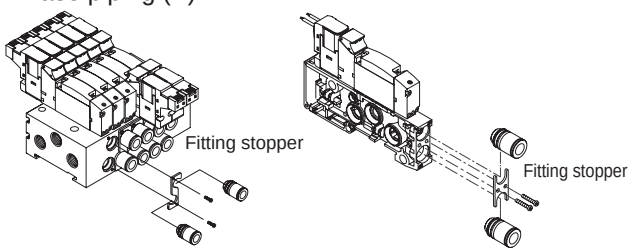

(1) Remove the mounting screw.
(2) Pull out the stopper plate and fitting together.
(3) Align the groove of the replacement fitting with the stopper plate and assemble them temporarily.
(4) Assemble the stopper plate with the fitting, and tighten the mounting screw. Pull on the fitting to confirm that it is properly installed.

Model No. of cartridge push-in fitting

Model	Part name		Model No.
4G1	ø1.8 barbed		4G1R-JOINT-CF-P70
	ø1.8 straight		4G1R-JOINT-C18-P70
	ø4 straight		4G1R-JOINT-C4-P70
	ø6 straight		4G1R-JOINT-C6-P70
	ø8 straight		4G1R-JOINT-C8-P70
	ø1.8 elbow		4G1R-JOINT-CL18, CLL18-P70
	ø4 elbow		4G1R-JOINT-CL4, CLL4-P70
	ø6 elbow		4G1R-JOINT-CL6, CLL6-P70
	ø1/8” straight		4G1R-JOINT-C3N-P70
	ø5/32” straight		4G1R-JOINT-C4N-P70
	ø1/8” elbow	(*1)	4G1R-JOINT-CL3N, CLL3N-P70
	ø5/32” elbow	(*1)	4G1R-JOINT-CL4N, CLL4N-P70
	Plug cartridge		4G1R-JOINT-CPG-P70
4G2	ø4 straight		4G2R-JOINT-C4-P70
	ø6 straight		4G2R-JOINT-C6-P70
	ø8 straight		4G2R-JOINT-C8-P70
	ø10 straight	(*2)	4G2R-JOINT-C10-P70
	ø6 elbow		4G2R-JOINT-CL6, CLL6-P70
	ø8 elbow		4G2R-JOINT-CL8, CLL8-P70
	ø1/4” straight		4G2R-JOINT-C6N-P70
	ø5/16” straight		4G2R-JOINT-C8N-P70
	ø1/4” elbow	(*1)	4G2R-JOINT-CL6N, CLL6N-P70
	ø5/16” elbow	(*1)	4G2R-JOINT-CL8N, CLL8N-P70
	Plug cartridge		4G2R-JOINT-CPG-P70
4G3	ø6 straight		4G3R-JOINT-C6-P70
	ø8 straight		4G3R-JOINT-C8-P70
	ø10 straight		4G3R-JOINT-C10-P70
	ø8 elbow		4G3R-JOINT-CL8, CLL8-P70
	ø10 elbow		4G3R-JOINT-CL10, CLL10-P70
	ø5/16” straight		4G3R-JOINT-C8N-P70
	ø3/8” straight		4G3R-JOINT-C10N-P70

*1: Custom order. *2: Common product with the 4G3 ø10 straight.

SCPD3
SCM
SSD2
MDC2
SMG
LCM
LCR
LCG
LCX
STM
STG
STR2
MRL2
GRC
Cylinder switch
MN3E MN4E
4GA/B
M4GA/B
MN4GA/B
F.R (module unit)
Clean F.R
Precision R
Press gauge Diff. press gauge
Electro-pneumatic R
Speed controller
Auxiliary valve
Fitting/ tube
Clean air unit
Pressure sensor
Flow rate sensor
Valve for air blow
Ending

During use & maintenance

4. How to change piping connection specification

⚠ CAUTION

■ When replacing the plate or fitting adaptor on the body, changing the body piping and base piping, or changing the push-in fitting and female thread of body piping, be sure to use appropriate tightening torque since air may leak if the mounting screws are loose.

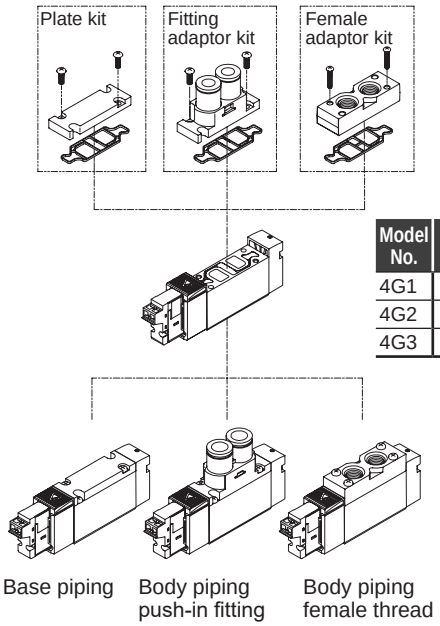

Model No.	Size	Tighten torque (N·m)
4G1	M1.7	0.18 to 0.22
4G2	M2.5	0.25 to 0.30
4G3	M3	0.6 to 0.7

Plate kit

Model No.	Kit model No.	Accessory part
4GB1	4G1R-PLATE-KIT-P70	Plate, gasket, 2 set screws
4GB2	4G2R-PLATE-KIT-P70	Plate, gasket, 2 set screws
4GB3	4G3R-PLATE-KIT-P70	Plate, gasket, 2 set screws

Fitting adaptor kit

4G1 R-JNT-ADAPTOR-KIT- C4 NC - F - P70

Ⓐ Model No.
Ⓑ Port size
Ⓒ NC/NO
Ⓓ Option
Ⓔ Clean room specifications

Code	Content	Ⓐ Model No. 3G1	3G2	3G3	4G1	4G2	4G3
Ⓑ Port size							
CF	ø1.8 barbed	●			●		
C18	ø1.8 straight	●			●		
C4	ø4 straight	●	●			●	
C6	ø6 straight	●	●	●		●	●
C8	ø8 straight		●	●		●	●
C10	ø10 straight			●			●
C3N	ø1/8 inch straight	●			●		
C4N	ø5/32 inch straight	●			●		
C6N	ø1/4 inch straight		●			●	
C8N	ø5/16 inch straight		●	●		●	●
C10N	ø3/8 inch straight			●			●
Ⓒ NC/NO							
NC	For 3GA□10	●	●	●			
NO	For 3GA□110	●	●	●			
Blank	3GA□10, 3GA□110 excluded	●	●		●	●	●
Ⓓ Option							
Blank		●	●	●	●	●	●
F	A/B port filter integrated	●	●	●	●	●	●

Ⓔ Clean room specifications	Structure	Material restriction	3G1	3G2	3G3	4G1	4G2	4G3
P70	Exhaust treatment	—	●	●	●	●	●	●
P74	Exhaust treatment	Copper-based/silicon-based/ halogen-based materials (fluorine, chlorine, bromine) are prohibited	●	●	●	●	●	●

Note: Fitting adaptor (with fitting), gasket and set screws (2) are included in a set.

Female adaptor kit

Model No.	Kit model No.	Accessory part
4G1	4G1R - FML - ADAPTOR - KIT - Port size - Option -P70	Female screw adaptor, gasket, 2 set screws
4G2	4G2R - FML - ADAPTOR - KIT - Port size - Option -P70	Female screw adaptor, gasket, 2 set screws
4G3	4G3R - FML - ADAPTOR - KIT - Port size - Option -P70	Female screw adaptor, gasket, 2 set screws, 2 body set screws

When using the A/B port filter integrated, specify the Option with "F".

During use & maintenance

5. How to replace coil

⚠ WARNING

■ Grommet lead wire, E and EJ connector coil assemblies

Replace the coil by removing the set screws shown below. Loosening other screws could cause operation failures. When installing, check that the gasket is installed on the coil side and tightening torque is proper. Improper mounting could result in air leakage or operation failures.

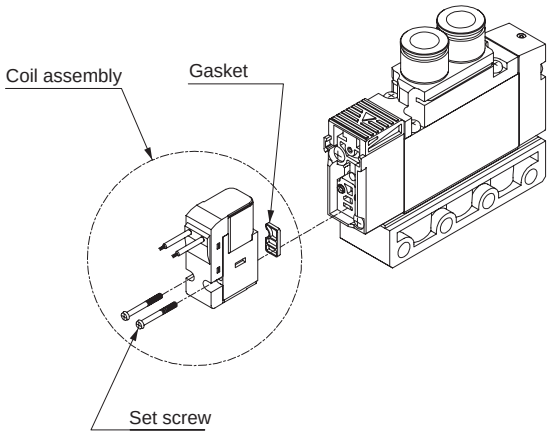

■ DIN terminal box coil assembly

Replace the coil assembly by removing the set screws shown below. Loosening other screws could cause operation failures. When installing, check that the gasket is installed on the coil assembly side and tightening torque is proper. Improper mounting could result in air leakage or operation failures.

The coil assembly of grommet lead wire, E-connector specification and DIN terminal box specification cannot be replaced. Recommended tightening torque 0.15 to 0.19 N·m

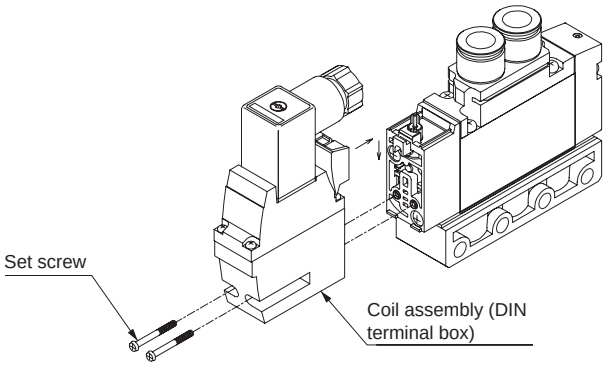

Components for air preparation and pressure adjustment (F.R. unit)

	Page
⚠ Safety precautions	764
Modular design	767
Clean filter/regulator	811
Precision regulator	845
Pressure gauge, differential pressure gauge	857
Electro pneumatic regulator	861

Safety Precautions

Always read this section before use.

Design & selection

WARNING

■ Use this product in accordance with the specifications range.
The products in this catalog are designed to be used only in a compressed air system. Using with pressure or temperature exceeding the specification range may result in damage or operation faults. (Refer to specifications)
Contact CKD when using fluids other than compressed air.

■ Install the product where it is not exposed to rain, water or direct sunlight.

■ Do not use this product in a corrosive environment. Using in such an environment could lead to damage or operation faults.

■ If ambient temperature is less than 5°C, moisture in the circuit could freeze and lead to operation faults, etc. Remove moisture to prevent freezing.

■ Avoid using this product in environments where ozone is generated.

CAUTION

■ Confirm that the product withstands the working environment.
- This product cannot be used in environments where functional obstacles could occur.
  Such environments include high temperature, chemical atmosphere, or where chemical, vibration, or gas is present.
  Environment where ozone is generated.

■ Understand compressed air features before designing a pneumatic circuit.
- The same functions as mechanical, hydraulic, and electrical methods cannot be anticipated when instantaneous holding of emergency stop is required.
- Pop-out, air discharge, or leakage due to air compression and expansion could occur.
- Design the circuit so that compressed air in the system is exhausted.

■ Indicate the maintenance conditions in the device's instruction manual.
- The product's function can drop markedly with working status, working environment, and maintenance, and can prevent safety from being attained. With correct maintenance, the product functions can be used to the fullest.

■ Check for leakage current to avoid malfunction caused by the leakage current.
- When using a programmable controller, leakage current may cause a malfunction.

■ Due to the characteristics of compressed air, the system accepts small leakage as tolerance if it does not affect the performance. Contact CKD if no leakage should be accepted.

Mounting / Installation / adjustment

Piping

CAUTION

■ Open the package in a clean room.
The product is packaged in a clean room, and should be opened just before piping in the clean room.

■ Do not remove the package or seat cap on the piping port until just before piping the product.
- If the piping port cap is removed from the piping port before piping work is started, foreign matter could enter the pneumatic component from the piping port and result in faults or faulty operation.

■ When connecting pipes, wrap sealing tape in the opposite direction from threads starting 2 mm or more inside from the end of piping threads.

- If sealing tape protrudes from piping threads, it could be cut when screwed in. This could cause the tape to enter the solenoid valve and lead to faults.

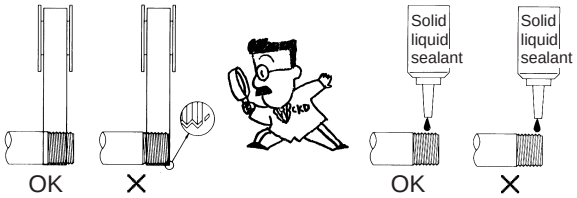

When using a liquid sealant, make sure that it does not adhere to the plastic bowl because the plastic bowl could break and cause a hazard.

■ Check that the pipe connected to the pneumatic component is not displaced due to vibration, looseness, or pull force.
- Displaced pipe results in a hazardous state.

■ Observe the following precautions when using nylon tubes or urethane tubes for piping material.
- When using the standard push-in fitting on the spiral tube, fix the base of the tube with a hose band. Rotation occurs, causing a reduction in holding force.
- Use a spigot fitting for high-temperature fluid. The push-in fitting cannot be used.

■ When mounting pneumatic components, do not use a mounting method that relies on support from the piping.

■ Around the pneumatic component, keep space for mounting, removal, wiring, and piping work.

■ Install an air filter just before the pneumatic component in the circuit.

■ Connect piping so that connections are not dislocated by system movement, vibration, or tension.

■ Any foreign matter that has entered during piping must be removed so it does not enter the pneumatic component.

■ Always flush just before piping pneumatic component.
- Any foreign matter that has entered the pipes during piping must be removed so that it does not enter the pneumatic component.

■ When supplying compressed air for the first time after connecting pipes, do not apply high pressure suddenly.
- Piping connection could be dislocated or the piping tube jump about leading to accidents.
- CAUTION: If compressed air is supplied too slowly, sealing pressure may not be generated depending on the internal sealing mechanism of the solenoid valve and may cause air leakage.

■ After connecting pipes, check pipe connections for air leaks before supplying compressed air.
- Apply a leakage detection agent on pipe connections with a brush, and check for air leaks. Make sure that the leak detection agent does not adhere to the plastic bowl because the plastic bowl could break and cause a hazard.

■ Use proper torque to tighten the pipes when connecting them.
- To prevent air leak and to protect threads from damage.
- First tighten the screw by hand to ensure that threads are not damaged, then use a tool.

[Recommended values]

Port thread	Tightening torque N·m
M3	0.3 to 0.6
M5	1 to 1.5
Rc 1/8	3 to 5
Rc 1/4	6 to 8
Rc 3/8	13 to 15
Rc 1/2	16 to 18
Rc 3/4	19 to 40
Rc 1	41 to 70

■ Remove the dust-proof seal of piping port just before starting piping.
- Removing it before starting piping work may cause foreign matter to enter the inside from the piping port, resulting in failure or malfunction.

During use & maintenance

⚠ CAUTION

■ Pneumatic components must be disassembled and assembled by a qualified worker.
- Personnel involved in this step must have passed the Pneumatic Pressure Skill Test Class 2 or higher.

■ Read the relevant product instruction manual thoroughly and fully familiarize yourself with work before disassembling or assembling the pneumatic component.
- Personnel must be fully familiar with pneumatic component structure and operational principles and safety requirements.

■ Be sure to turn power OFF, stop supplying compressed air, and check that there is no residual pressure before starting maintenance.
- This is required to ensure safety.
- Do not perform residual pressure exhaust inside clean room.

■ Quality of air
- Use CKD clean air system components appropriate for your application.
- Use compressed air that does not contain oxidized oil, tar, carbon, etc., from the air compressor.
- Use compressed air that does not contain solid foreign matter.

Modular design

F.R

Components for air preparation and pressure adjustment/F.R. unit

CONTENTS

Filters and regulators

- Filter/regulator (W*000) 768
- Reverse filter/regulator (W*100) 774

Air filter

- Air filter (F*000) 780
- Oil mist filter (M*000) 784
- High performance oil mist filter (MX*000) 788

Regulator

- Regulator (R*000) 792
- Reverse regulator (R*100) 798

Auxiliary components

- Joiner 803
- Piping adaptor 804
- ⚠ Safety precautions 807

Filter/regulator

W2000/W3000/W4000 Series

JIS symbol

RoHS CAD

Structure and material restriction

	Structure	Material restriction			Model No.
P7 Series	Exhaust treatment				–P70
	Exhaust treatment	Copper-based materials prohibited	Silicon-based materials prohibited	Halogen-based materials prohibited (fluorine, chlorine, bromine)	–P74 Custom order product

Specifications

Descriptions		W2000	W3000	W4000
Working fluid		Compressed air		
Max. working pressure	MPa	1.0		
Proof pressure	MPa	1.5		
Ambient temperature/fluid temperature	°C	5 to 50		
Filtration rating	μm	5	5 or 0.3	
Set pressure	MPa	0.05 to 0.85		
Pressure relief		Nonrelief		
Weight	kg	0.40	0.64	0.99

How to order

W3000 – 8 – ○ N ○ – P70 – B

Ⓐ Model No.

Ⓑ Port size

Ⓒ Option

Ⓓ Clean room specifications

Ⓔ Other attachments

Code		Content	Ⓐ Model No. W2000	W3000	W4000
Ⓑ Port size					
8		Rc1/4	●	●	●
10		Rc3/8	●	●	●
15		Rc1/2			●
Ⓒ Option *2 *3 *4 *5					
Bowl	Blank	PC bowl: without drain discharge	●	●	●
	C6	PC bowl: drain discharge Rc1/8	●	●	●
	M6	Metal bowl: drain discharge Rc1/8	●	●	●
Element	Blank	5 μm	●	●	●
	Y	0.3 μm (submicron)		●	●
Pressure range	Blank	0.05 to 0.85 MPa	●	●	●
	L	0.05 to 0.35 MPa	●	●	●
Pressure relief	N	Nonrelief	●	●	●
Pressure gauge *9	Blank	With standard pressure gauge (G401) *1	●	●	●
	T	Without pressure gauge (gauge port (Rc1/4) is assembled with sealed)	●	●	●
	T8	For attaching pressure gauge (gauge port (Rc1/4) is assembled with ventilated)	●	●	●
	T6	For attaching pressure gauge (gauge port (Rc1/8) is assembled with ventilated)	●	●	●
Flow direction	Blank	Standard flow (left → right)	●	●	●
	X1	Reverse flow (right → left)	●	●	●
Ⓓ Clean room specifications					
		Structure			
P70		Exhaust treatment	●	●	●
Ⓔ Other attachments *6 *7					
Blank		Without attachment	●	●	●
A8		Rc1/4 piping adaptor set	●	●	●
A10		Rc3/8 piping adaptor set	●	●	●
A15		Rc1/2 piping adaptor set	●	●	●
A20		Rc3/4 piping adaptor set			●
B		C bracket	●	●	●
B3		L bracket	●	●	●
E1		Fitting (pressure relief port) *1	●	●	●
GX59		G59D-8-P10-P70 (L: G59D-8-P04-P70) *1	●	●	●
GY59		G59D-8-P10-P94 (L: G59D-8-P04-P94)	●	●	●

Precautions for model No. selection

*1: Attachment for options made of brass. All others are attachments for options not made of copper-based materials.
*2: Select options per drainage, bowl material, and element sections.
When selecting options for several items, list options in order from the top. Be sure to select "N" non-pressure relief.
*3: If "L" is selected for pressure range, a low pressure gauge (0 to 0.4 MPa) is used.
*4: For "T", "T8", "T6", a gauge plug is assembled instead of a pressure gauge. The gauge port for "T", "T8" is Rc1/4 and T6 is Rc1/8.
*5: One pipe plug is attached for options "C6" and "M6".
*6: Piping adaptor set A*00-*-P70 (page 804) is attached.
*7: Refer to pages 804 to 806 for adaptor, 858 for pressure gauge.
*8: The piping adaptor set and C bracket cannot be used at the same time.
Refer to page 761 for max. processing flow when option "Y" is selected.
*9: When option "T6" is selected, the attachment "GX59", "GY59" has a different thread size, so it cannot be selected together.

How to order (custom order product)

W3000 — 8 — ◯N◯ — P74 — B

Ⓐ Model No.
Ⓑ Port size
Ⓒ Option
Ⓓ Clean room specifications
Ⓔ Other attachments

Code		Content	Ⓐ Model No. W2000	W3000	W4000
Ⓑ Port size					
8		Rc1/4	●	●	●
10		Rc3/8	●	●	●
15		Rc1/2			●
Ⓒ Option *1 *2 *3 *4					
Bowl	Blank	PC bowl: without drain discharge	●	●	●
	C6	PC bowl: drain discharge Rc1/8	●	●	●
	M6	Metal bowl: drain discharge Rc1/8	●	●	●
Element	Blank	5 μm	●	●	●
	Y	0.3 μm (submicron)		●	●
Pressure range	Blank	0.05 to 0.85 MPa	●	●	●
	L	0.05 to 0.35 MPa	●	●	●
Pressure relief	N	Nonrelief	●	●	●
Pressure gauge *9	T	Without pressure gauge (gauge port (Rc1/4) is assembled with sealed)	●	●	●
	T8	For attaching pressure gauge (gauge port (Rc1/4) is assembled with ventilated)	●	●	●
	T6	For attaching pressure gauge (gauge port (Rc1/8) is assembled with ventilated)	●	●	●
Flow direction	Blank	Standard flow (left → right)	●	●	●
	X1	Reverse flow (right → left)	●	●	●
Ⓓ Clean room specifications					
	Structure	Material restriction			
P74	Exhaust treatment	Copper-based/silicon-based/halogen-based materials (fluorine, chlorine, bromine) are prohibited	●	●	●
Ⓔ Other attachments *5 *6					
Blank		Without attachment	●	●	●
A8		Rc1/4 piping adaptor set	●	●	●
A10		Rc3/8 piping adaptor set	●	●	●
A15		Rc1/2 piping adaptor set	●	●	●
A20		Rc3/4 piping adaptor set			●
B		C bracket	●	●	●
B3		L bracket	●	●	●
E1		Fitting (pressure relief port) *8	●	●	●
GY59		G59D-8-P10-P94 (L: G59D-8-P04-P94)	●	●	●

⚠ Precautions for model No. selection

*1: Select options per drainage, bowl material, and element sections. When selecting options for several items, list options in order from the top. Be sure to select "N" non-pressure relief.
*2: If "L" is selected for pressure range, a low pressure gauge (0 to 0.4 MPa) is used.
*3: For "T", "T8", "T6", a gauge plug is assembled instead of a pressure gauge. The gauge port for "T", "T8" is Rc1/4 and T6 is Rc1/8.
*4: One pipe plug is attached for options "C6" and "M6".
*5: Piping adaptor set A*00-*-P70 (page 804) is attached.
*6: Refer to pages 804 to 806 for adaptor, 858 for pressure gauge. The piping adaptor set and C bracket cannot be used at the same time.
*7: Refer to page 781 for max. processing flow when option "Y" is selected.
*8: For the fittings, copper-based materials are used.
*9: When option "T6" is selected, the attachment "GY59" has a different thread size, so it cannot be selected together.

Flow characteristics

● W2000-8

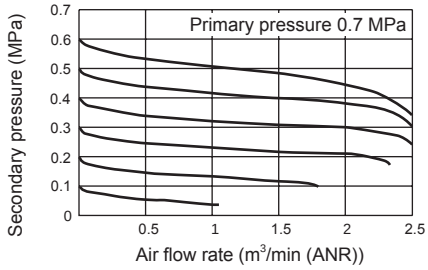

● W2000-10

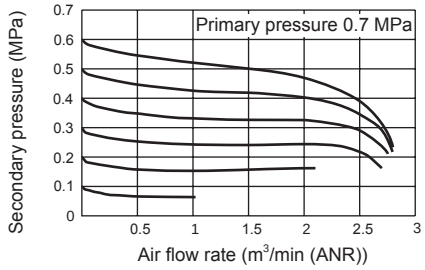

● W3000-8

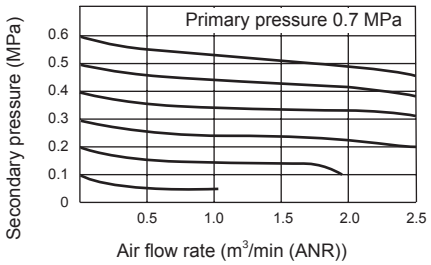

● W3000-10

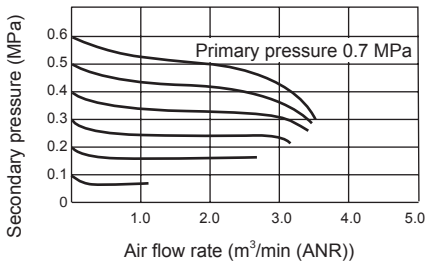

● W4000-8

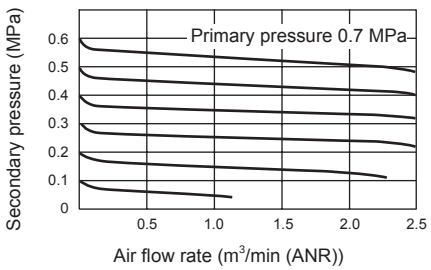

● W4000-10

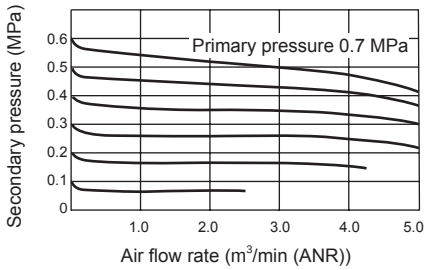

● W4000-15

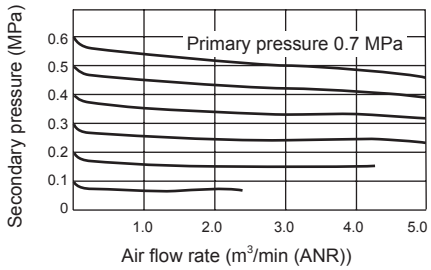

Pressure characteristics

● W2000

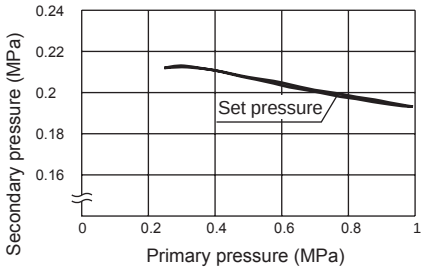

● W3000

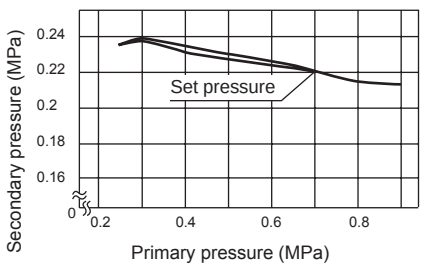

● W4000

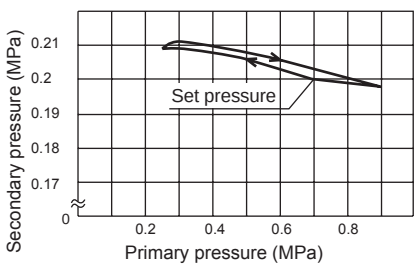

Dimensions

● W2000-P70/P74

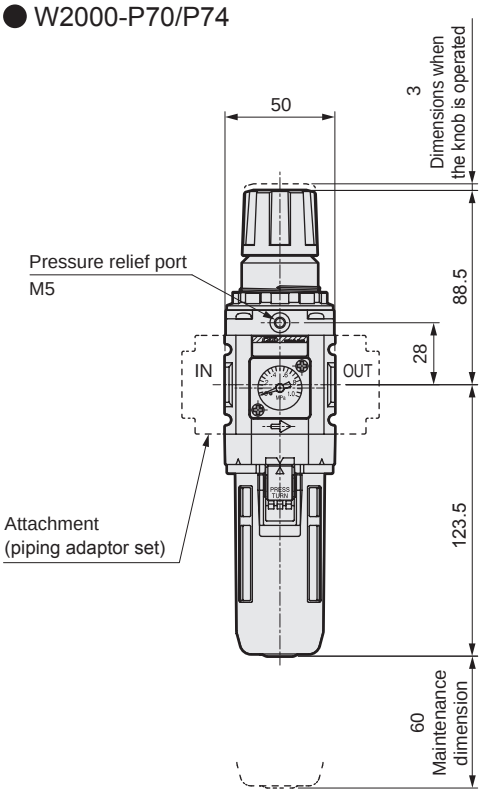

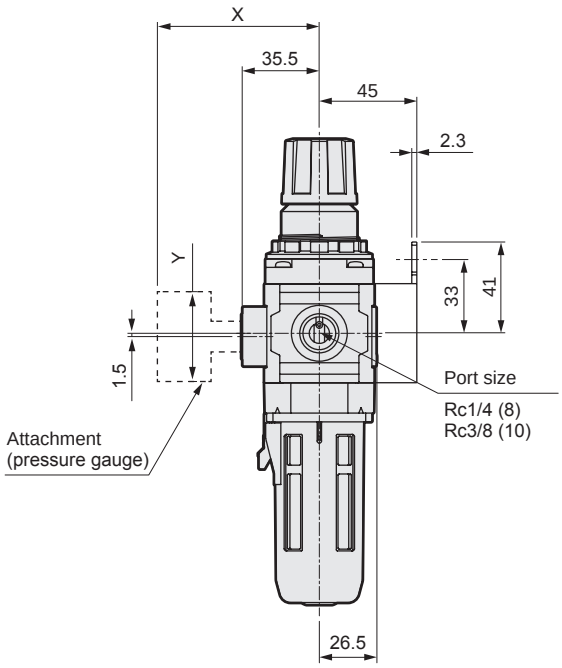

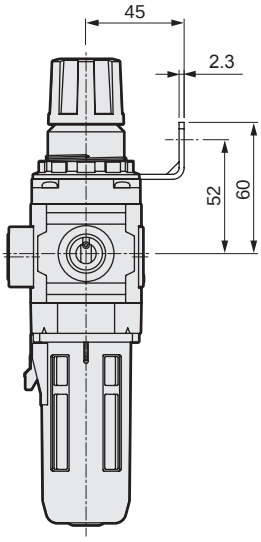

Panel cut dimension

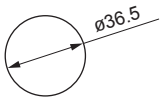

Panel plate thickness: MAX 4 mm

Table of optional dimensions with pressure gauge

Attached pressure gauge	X	Y
GX59	80	ø52
GY59	82.5	ø52

[Optional dimensions]

● PC bowl drain discharge: Rc1/8 (C6)

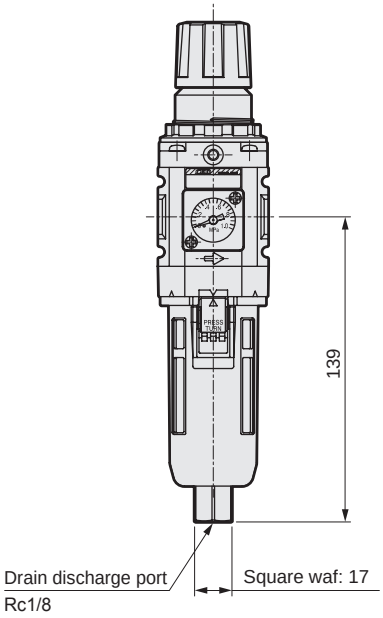

Note: Mount with fixing on square waf, when pipe for drain discharge.

● Metal bowl (M6)

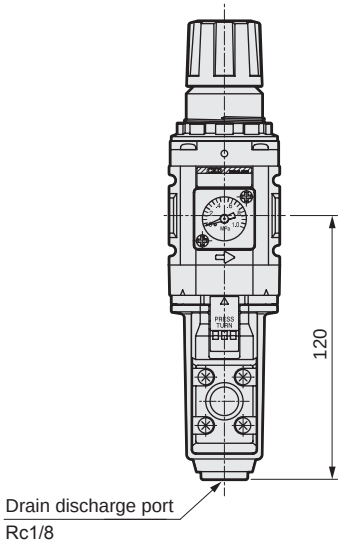

[Bracket dimensions]

● C bracket
Part model No.: B220-P70
・Material: steel, nickel plate processing

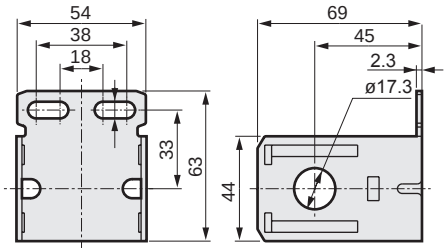

● L bracket
Part model No.: B230-P70
・Material: steel, nickel plate processing

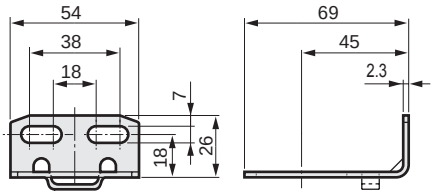

● Fitting
Part model No.: R4000-E1-P70
・Material: brass, nickel plate processing

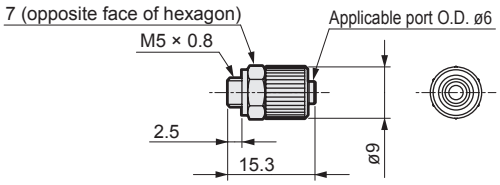

SCPD3
SCM
SSD2
MDC2
SMG
LCM
LCR
LCG
LCX
STM
STG
STR2
MRL2
GRC
Cylinder switch
MN3E MN4E
4GA/B
M4GA/B
MN4GA/B
F.R (module unit)
Clean F.R
Precision R
Press gauge Diff. press gauge
Electro-pneumatic R
Speed controller
Auxiliary valve
Fitting/ tube
Clean air unit
Pressure sensor
Flow rate sensor
Valve for air blow
Ending

Dimensions

● W3000-P70/P74

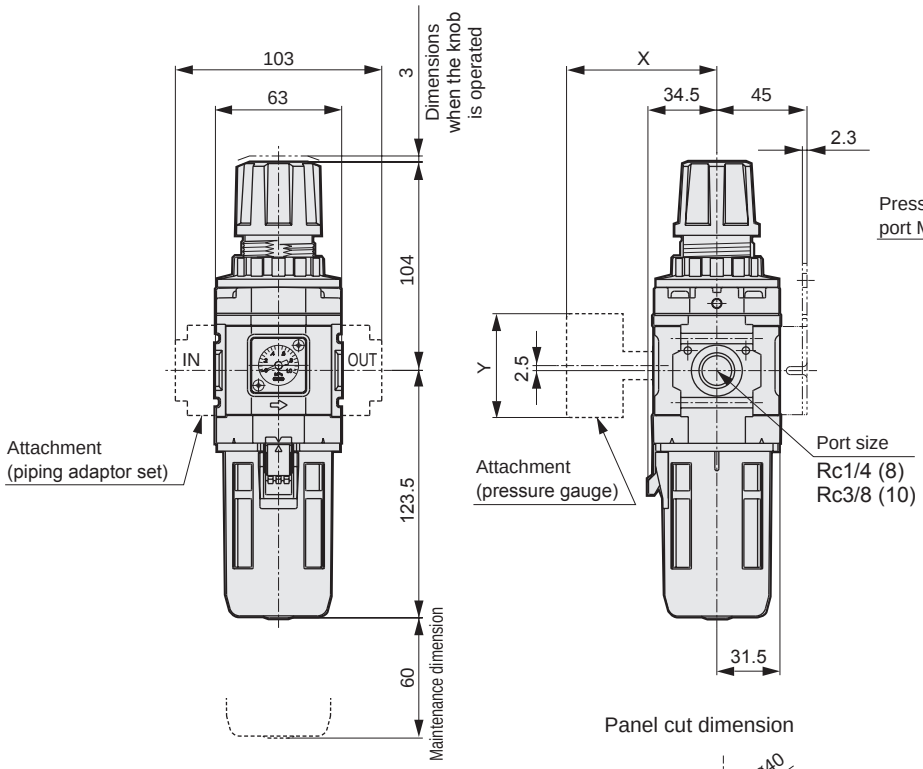

Panel cut dimension

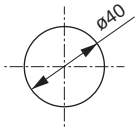

Panel plate thickness: MAX 6 mm

Table of optional dimensions with pressure gauge

Attached pressure gauge	X	Y
GX59	76.5	ø52
GY59	79	ø52

[Optional dimensions]

● PC bowl drain discharge: Rc1/8 (C6)

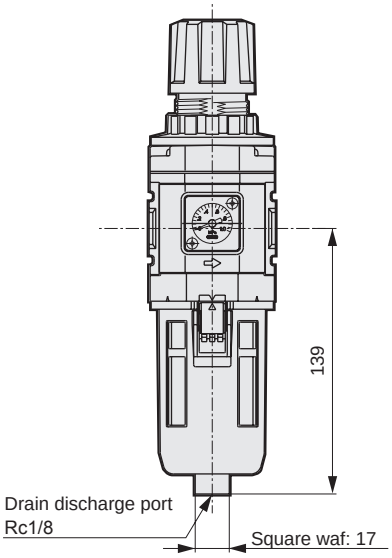

Note: Mount with fixing on square waf, when pipe for drain discharge.

● Metal bowl (M6)

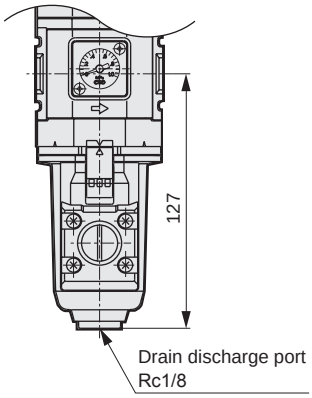

[Bracket dimensions]

● C bracket
Part model No.: B320-P70
・Material: steel, nickel plate processing

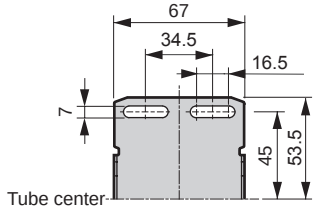

● L bracket
Part model No.: B330-P70
・Material: steel, nickel plate processing

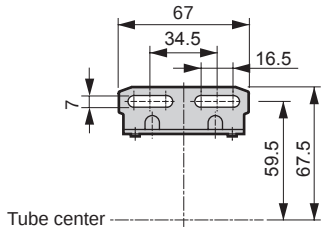

● Fitting
Part model No.: R4000-E1-P70
・Material: brass, nickel plate processing

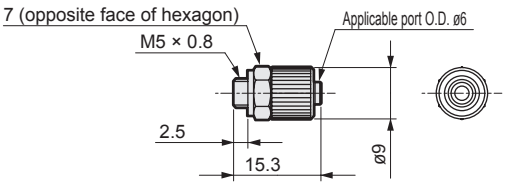

Dimensions

● W4000-P70/P74

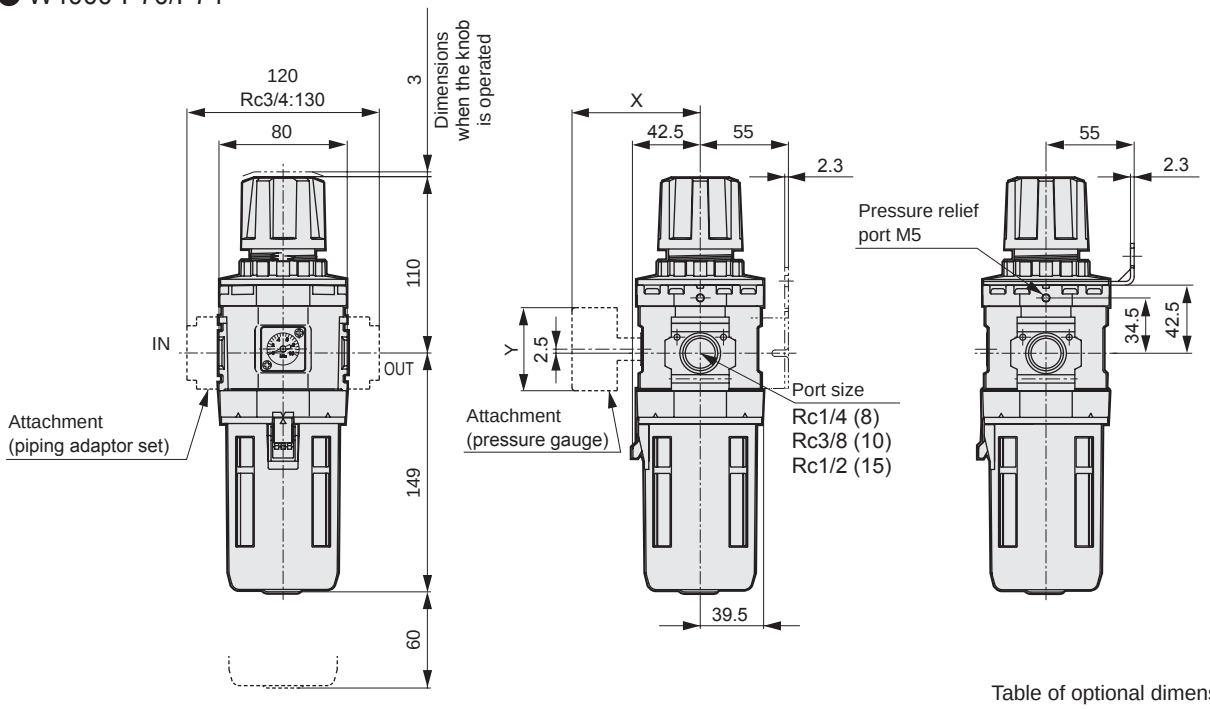

Panel cut dimension

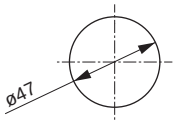

Panel plate thickness: MAX 4 mm

Table of optional dimensions with pressure gauge

Attached pressure gauge	X	Y
GX59	81.5	ø52
GY59	84	ø52

[Optional dimensions]

● PC bowl drain discharge: Rc1/8 (C6)

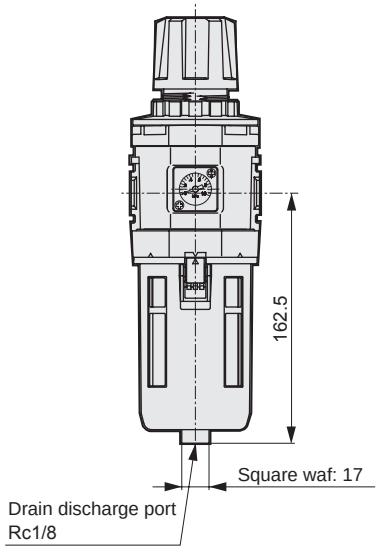

Note: Mount with fixing on square waf, when pipe for drain discharge.

● Metal bowl (M6)

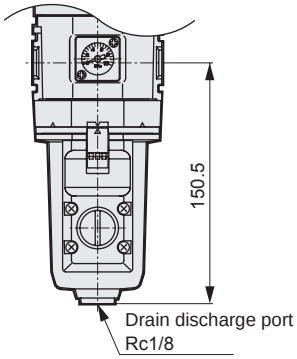

[Bracket dimensions]

● C bracket
Part model No.: B420-P70
・Material: steel, nickel plate processing

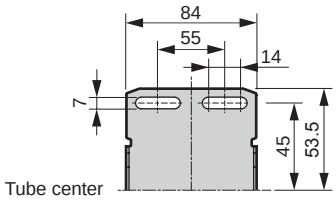

● L bracket
Part model No.: B430-P70
・Material: steel, nickel plate processing

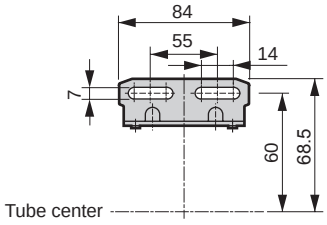

● Fitting
Part model No.: R4000-E1-P70
・Material: brass, nickel plate processing

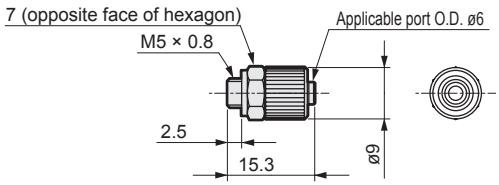

Reverse filter/regulator

W2100/W3100/W4100 Series

JIS symbol

RoHS CAD

Structure and material restriction

	Structure	Material restriction			Model No.
P7 Series	Exhaust treatment				–P70
	Exhaust treatment	Copper-based materials prohibited	Silicon-based materials prohibited	Halogen-based materials prohibited (fluorine, chlorine, bromine)	–P74 Custom order product

Specifications

Descriptions		W2100	W3100	W4100
Working fluid		Compressed air		
Max. working pressure	MPa	1.0		
Proof pressure	MPa	1.5		
Ambient temperature/fluid temperature	°C	5 to 50		
Filtration rating	μm	5	5 or 0.3	
Set pressure	MPa	0.05 to 0.85		
Pressure relief		Nonrelief		
Weight	kg	0.40	0.64	0.99

Note 1: Check that the primary pressure is higher than the secondary pressure by 0.05 MPa or more.
Note 2: Refer to the set pressure range for the back pressure given on page 776 when selecting the model.

How to order

W3100 – 8 – ○ N ○ – P70 – B

- W3100: Ⓐ Model No.
- 8: Ⓑ Port size
- N ○: Ⓒ Option
- P70: Ⓓ Clean room specifications
- B: Ⓔ Other attachments

Code		Content	Ⓐ Model No. W2100	W3100	W4100
Ⓑ Port size					
8		Rc1/4	●	●	●
10		Rc3/8	●	●	●
15		Rc1/2			●
Ⓒ Option *2 *3 *4 *5					
Bowl	Blank	PC bowl: without drain discharge	●	●	●
	C6	PC bowl: drain discharge Rc1/8	●	●	●
	M6	Metal bowl: drain discharge Rc1/8	●	●	●
Element	Blank	5 μm	●	●	●
	Y	0.3 μm (submicron)		●	●
Pressure range	Blank	0.05 to 0.85 MPa	●	●	●
	L	0.05 to 0.35 MPa	●	●	●
Pressure relief	N	Nonrelief	●	●	●
Pressure gauge *10	Blank	With standard pressure gauge (G401) *1	●	●	●
	T	Without pressure gauge (gauge port (Rc1/4) is assembled with sealed)	●	●	●
	T8	For attaching pressure gauge (gauge port (Rc1/4) is assembled with ventilated)	●	●	●
	T6	For attaching pressure gauge (gauge port (Rc1/8) is assembled with ventilated)	●	●	●
Flow direction	Blank	Standard flow (left → right)	●	●	●
	X1	Reverse flow (right → left)	●	●	●
Ⓓ Clean room specifications					
		Structure			
P70		Exhaust treatment	●		●
Ⓔ Other attachments *7 *8					
Blank		Without attachment	●	●	●
A8		Rc1/4 piping adaptor set	●	●	●
A10		Rc3/8 piping adaptor set	●	●	●
A15		Rc1/2 piping adaptor set	●	●	●
A20		Rc3/4 piping adaptor set			●
B		C bracket	●	●	●
B3		L bracket	●	●	●
E1		Fitting (pressure relief port) *1	●	●	●
GX59		G59D-8-P10-P70 (L: G59D-8-P04-P70) *1	●	●	●
GY59		G59D-8-P10-P94 (L: G59D-8-P04-P94)	●	●	●

Precautions for model No. selection

*1: Attachment for options made of brass. All others are attachments for options not made of copper-based materials.
*2: Select options per drainage, bowl material, and element sections. When selecting options for several items, list options in order from the top. Be sure to select "N" non-pressure relief.
*3: If "L" is selected for pressure range, a low pressure gauge (0 to 0.4 MPa) is used.
***4: Positions of a check valve and pressure gauge cannot be changed. If the IN and OUT direction must be reversed, indicate "X1" at the end of the option field.**
*5: For "T", "T8", "T6", a gauge plug is assembled instead of a pressure gauge. The gauge port for "T", "T8" is Rc1/4 and T6 is Rc1/8.
*6: One pipe plug is attached for options "C6" and "M6".
*7: Piping adaptor set A*00-*-P70 (page 804) is attached.
*8: Refer to pages 804 to 806 for adaptor, 858 for pressure gauge. The piping adaptor set and C bracket cannot be used at the same time.
*9: Refer to page 761 for max. processing flow when option "Y" is selected.
*10: When option "T6" is selected, the attachment "GX59", "GY59" has a different thread size, so it cannot be selected together.

How to order (custom order product)

W3100 — 8 — ◯ N ◯ — P74 — B

Ⓐ Model No.
Ⓑ Port size
Ⓒ Option
Ⓓ Clean room specifications
Ⓔ Other attachments

Code		Content	Ⓐ Model No. W2100	W3100	W4100
Ⓑ Port size					
8		Rc1/4	●	●	●
10		Rc3/8	●	●	●
15		Rc1/2			●
Ⓒ Option *1 *2 *3 *4 *5					
Bowl	Blank	PC bowl: without drain discharge	●	●	●
	C6	PC bowl: drain discharge Rc1/8	●	●	●
	M6	Metal bowl: drain discharge Rc1/8	●	●	●
Element	Blank	5 μm	●	●	●
	Y	0.3 μm (submicron)		●	●
Pressure range	Blank	0.05 to 0.85 MPa	●	●	●
	L	0.05 to 0.35 MPa	●	●	●
Pressure relief	N	Nonrelief	●	●	●
Pressure gauge *10	T	Without pressure gauge (gauge port (Rc1/4) is assembled with sealed)	●	●	●
	T8	For attaching pressure gauge (gauge port (Rc1/4) is assembled with ventilated)	●	●	●
	T6	For attaching pressure gauge (gauge port (Rc1/8) is assembled with ventilated)	●	●	●
Flow direction	Blank	Standard flow (left → right)	●	●	●
	X1	Reverse flow (right → left)	●	●	●
Ⓓ Clean room specifications					
	Structure	Material restriction			
P74	Exhaust treatment	Copper-based/silicon-based/halogen-based materials (fluorine, chlorine, bromine) are prohibited	●	●	●
Ⓔ Other attachments *6 *7					
Blank		Without attachment	●	●	●
A8		Rc1/4 piping adaptor set	●	●	●
A10		Rc3/8 piping adaptor set	●	●	●
A15		Rc1/2 piping adaptor set	●	●	●
A20		Rc3/4 piping adaptor set			●
B		C bracket	●	●	●
B3		L bracket	●	●	●
E1		Fitting (pressure relief port) *9	●	●	●
GY59		G59D-8-P10-P94 (L: G59D-8-P04-P94)	●	●	●

⚠ Precautions for model No. selection

*1: Select options per drainage, bowl material, and element sections. When selecting options for several items, list options in order from the top. Be sure to select "N" non-pressure relief.
*2: If "L" is selected for pressure range, a low pressure gauge (0 to 0.4 MPa) is used.
***3: Positions of a check valve and pressure gauge cannot be changed. If the IN and OUT direction must be reversed, indicate "X1" at the end of the option field.**
*4: For "T", "T8", "T6", a gauge plug is assembled instead of a pressure gauge. The gauge port for "T", "T8" is Rc1/4 and T6 is Rc1/8.
*5: One pipe plug is attached for options "C6" and "M6".
*6: Piping adaptor set A*00-*-P70 (page 804) is attached.
*7: Refer to pages 804 to 806 for adaptor, 858 for pressure gauge. The piping adaptor set and C bracket cannot be used at the same time.
*8: Refer to page 781 for max. processing flow when option "Y" is selected.
*9: For the fittings, copper-based materials are used.
*10: When option "T6" is selected, the attachment "GY59" has a different thread size, so it cannot be selected together.

Flow characteristics

● W2100-8

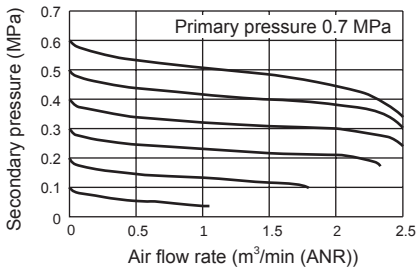

● W2100-10

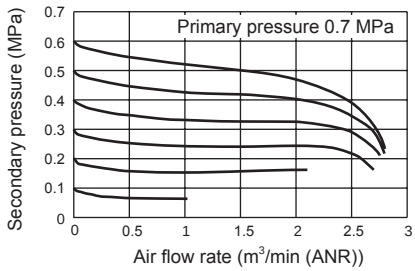

● W3100-8

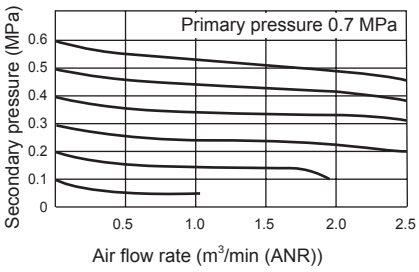

● W3100-10

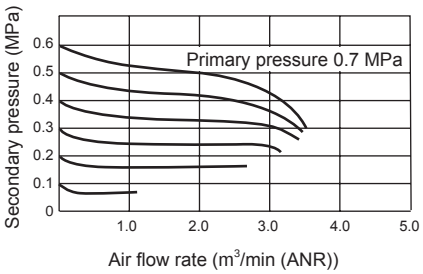

● W4100-8

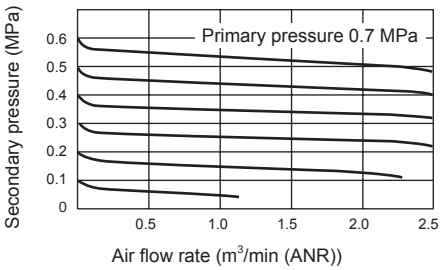

● W4100-10

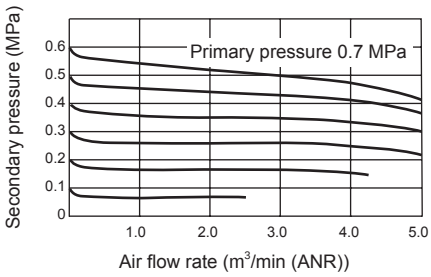

● W4100-15

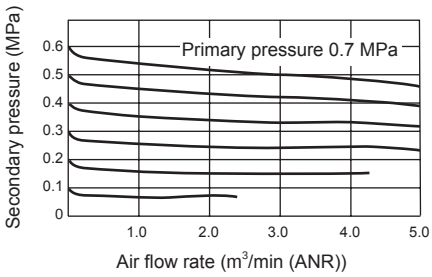

● Set pressure to back pressure

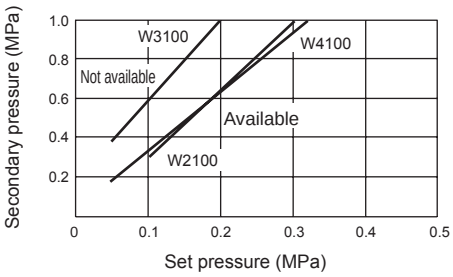

Note: The upper face of the graph is not usable and the lower side is usable.
Example: If W4100 is set to the set pressure 0.2 MPa and the secondary back pressure is 0.6 MPa and over, the secondary pressure will not be released to the primary side.

Pressure characteristics

● W2100

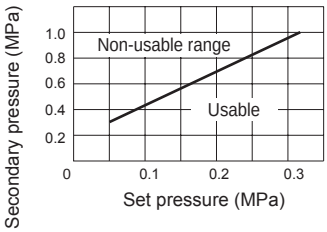

● W3100

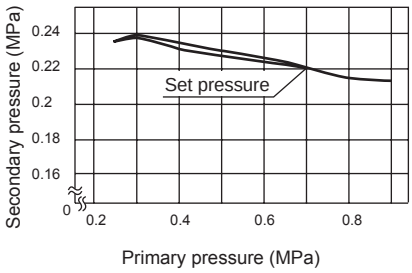

● W4100

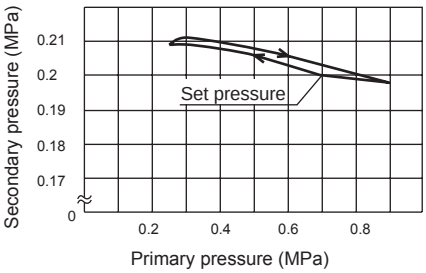

Functional explanation

When the primary pressure is introduced from the IN side, the check valve functions as a regular regulator because it closes with primary pressure and spring load. When primary pressure is released by a switching valve such as a shut-off valve, the check valve opens with secondary pressure. Pressure in the diaphragm chamber is released and pressure drops. This causes the diaphragm to be pressed down by the pressure adjustment spring. The main valve (valve assembly) opens, and the air on the OUT side is discharged.

Note: For the regulator's set pressure, set the back pressure A when the primary pressure is released within the range shown in the graph "Set pressure range for back pressure". (Refer to the graph above)

● Circuit diagram

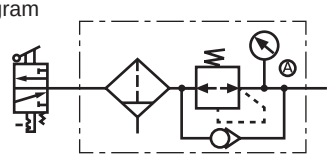

When using shut-off valve in front of reverse filter and regulator.

Dimensions

● W2100-P70/P74

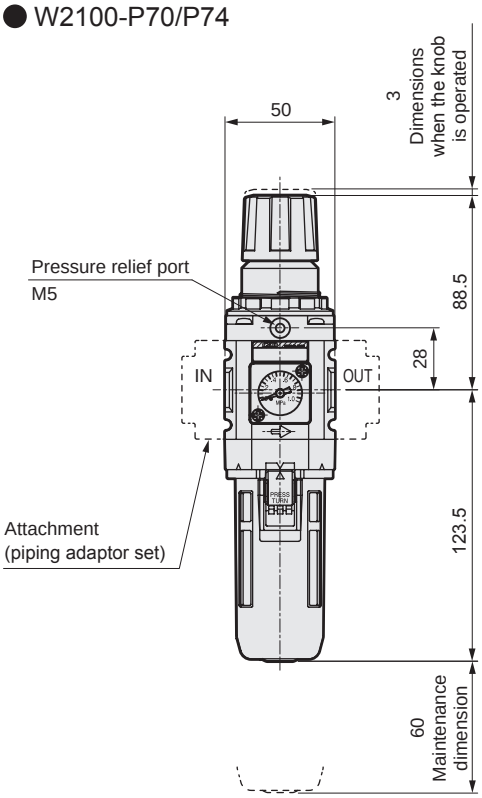

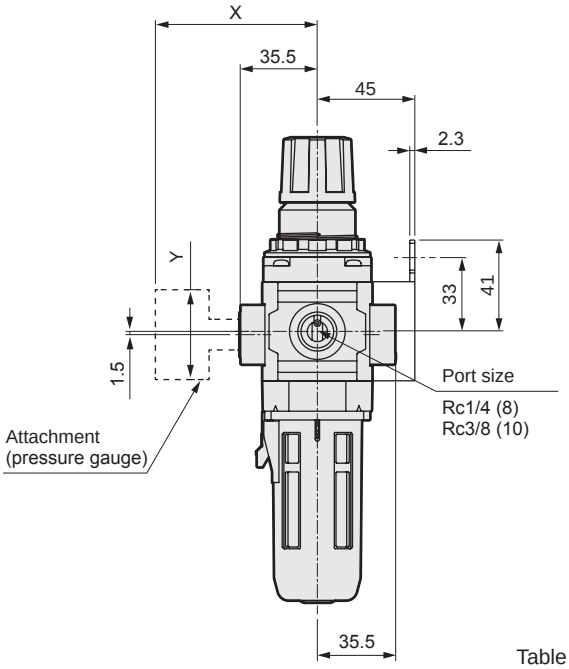

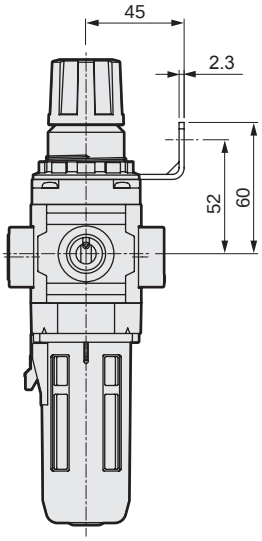

Panel cut dimension

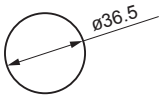

Panel plate thickness: MAX 4 mm

Table of optional dimensions with pressure gauge

Attached pressure gauge	X	Y
GX59	80	ø52
GY59	82.5	ø52

[Optional dimensions]

● PC bowl drain discharge: Rc1/8 (C6)

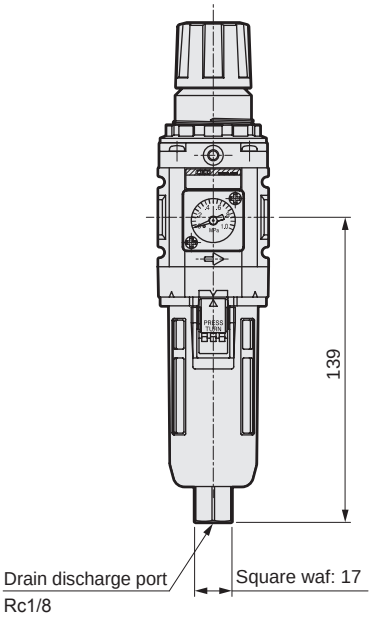

Note: Mount with fixing on square waf, when pipe for drain discharge.

● Metal bowl (M6)

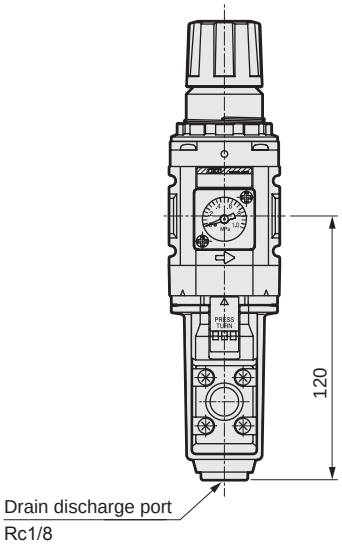

[Bracket dimensions]

● C bracket
Part model No.: B220-P70
・Material: steel, nickel plate processing

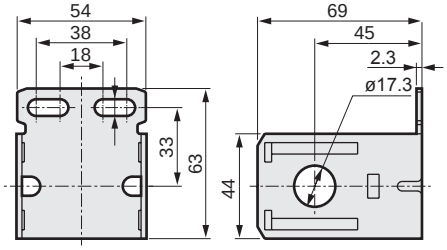

● L bracket
Part model No.: B230-P70
・Material: steel, nickel plate processing

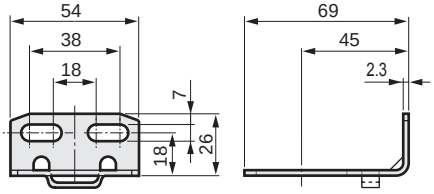

● Fitting
Part model No.: R4000-E1-P70
・Material: brass, nickel plate processing

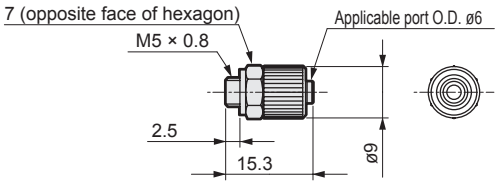

SCPD3
SCM
SSD2
MDC2
SMG
LCM
LCR
LCG
LCX
STM
STG
STR2
MRL2
GRC
Cylinder switch
MN3E MN4E
4GA/B
M4GA/B
MN4GA/B
F.R (module unit)
Clean F.R
Precision R
Press gauge Diff. press gauge
Electro-pneumatic R
Speed controller
Auxiliary valve
Fitting/ tube
Clean air unit
Pressure sensor
Flow rate sensor
Valve for air blow
Ending

Dimensions

● W3100-P70/P74

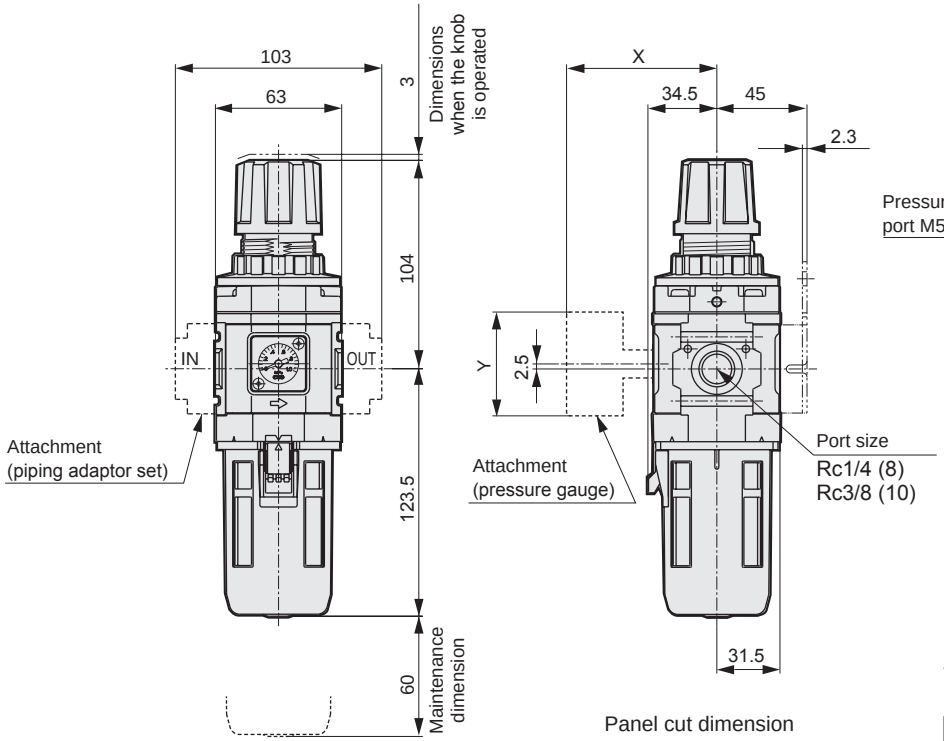

Panel cut dimension

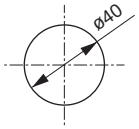

Panel plate thickness: MAX 6mm

Table of optional dimensions with pressure gauge

Attached pressure gauge	X	Y
GX59	76.5	ø52
GY59	79	ø52

[Optional dimensions]

● PC bowl drain discharge: Rc1/8 (C6)

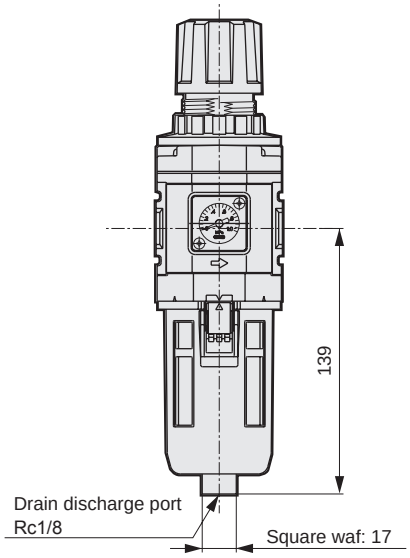

Note: Mount with fixing on square waf, when pipe for drain discharge.

● Metal bowl (M6)

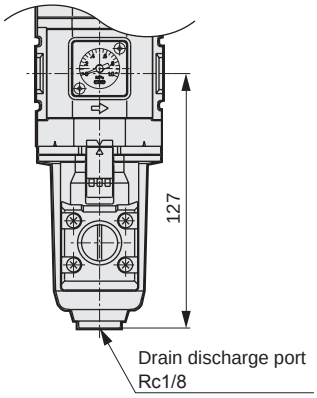

[Bracket dimensions]

● C bracket
Part model No.: B320-P70
・Material: steel, nickel plate processing

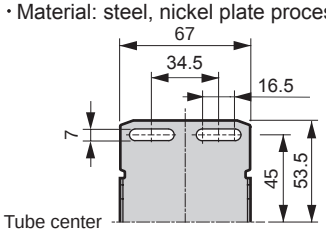

● L bracket
Part model No.: B330-P70
・Material: steel, nickel plate processing

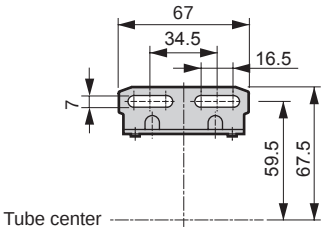

● Fitting
Part model No.: R4000-E1-P70
・Material: brass, nickel plate processing

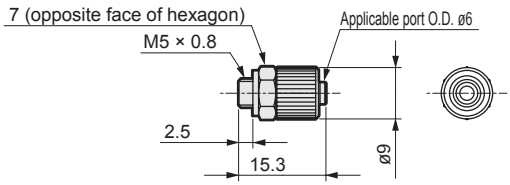

Dimensions

● W4100-P70/P74

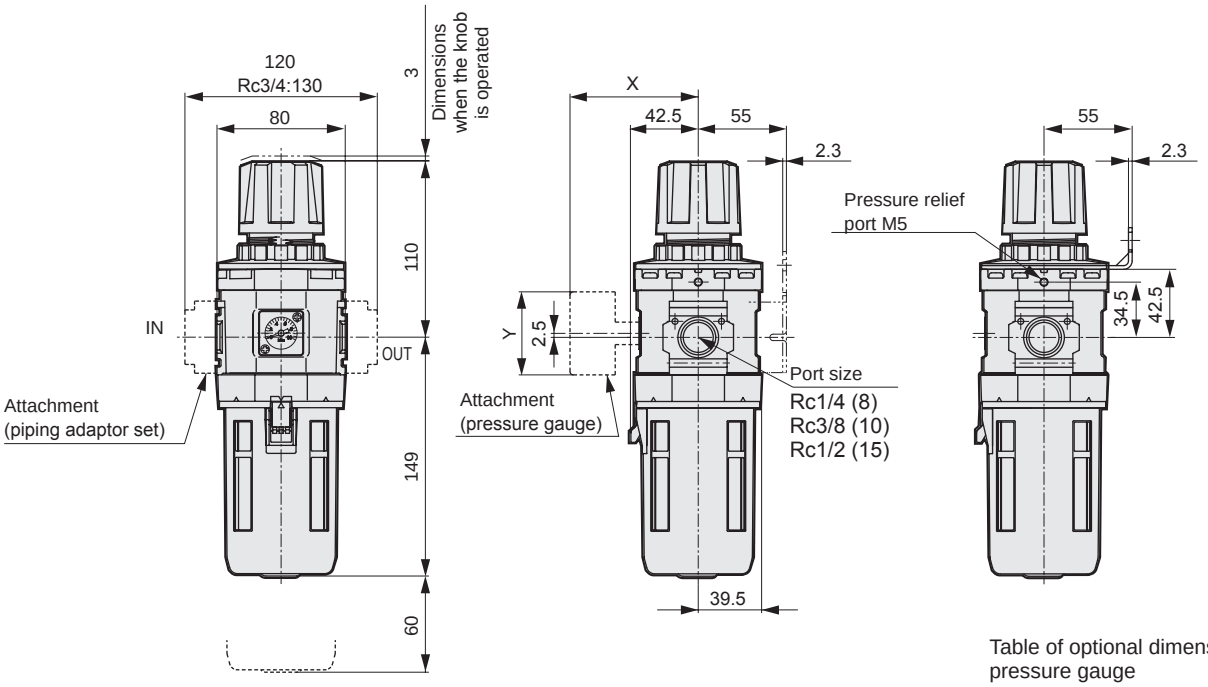

Panel cut dimension

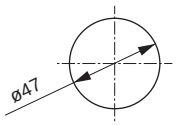

Panel plate thickness: MAX 4 mm

Table of optional dimensions with pressure gauge

Attached pressure gauge	X	Y
GX59	81.5	ø52
GY59	84	ø52

[Optional dimensions]

● PC bowl drain discharge: Rc1/8 (C6)

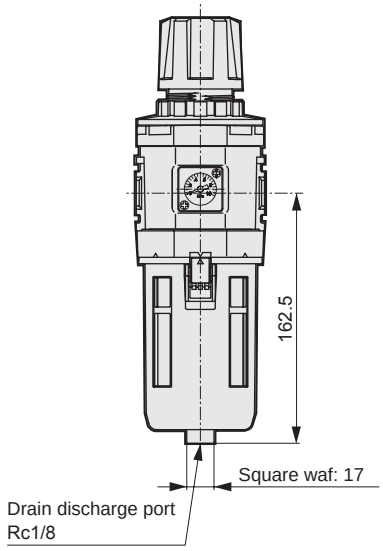

Note: Mount with fixing on square waf, when pipe for drain discharge.

● Metal bowl (M6)

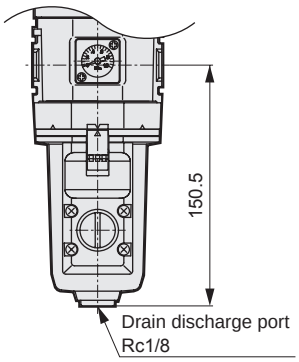

[Bracket dimensions]

● C bracket
Part model No.: B420-P70
・Material: steel, nickel plate processing

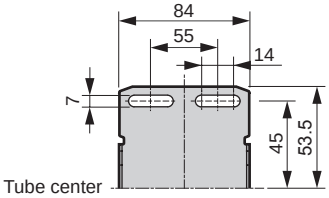

● L bracket
Part model No.: B430-P70
・Material: steel, nickel plate processing

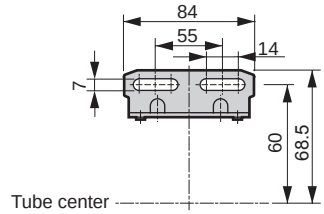

● Fitting
Part model No.: R4000-E1-P70
・Material: brass, nickel plate processing

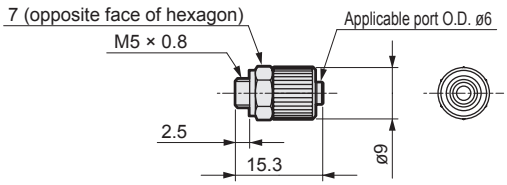

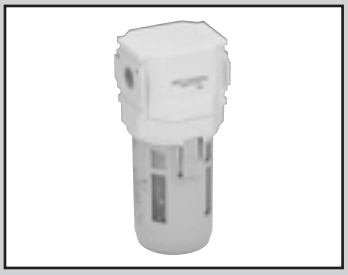

Air filter

F2000/F3000/F4000/F6000 Series

JIS symbol

RoHS CAD

Structure/treatment and material restriction

	Structure/treatment	Material restriction			Model No.
P7 Series	Dust generation preventing				– P70
	Dust generation preventing	Copper-based materials prohibited	Silicon-based materials prohibited	Halogen-based materials prohibited (fluorine, chlorine, bromine)	– P74 Custom order product

Specifications

Descriptions		F2000	F3000	F4000	F6000
Working fluid		Compressed air			
Max. working pressure	MPa	1.0			
Proof pressure	MPa	1.5			
Ambient temperature/fluid temperature	°C	5 to 50			
Filtration rating	μm	5	5 or 0.3		
Weight	kg	0.24	0.25	0.45	0.90

How to order

F3000 – 8 — Y — P70 — B

Ⓐ Model No.

Ⓑ Port size

Ⓒ Option

Ⓓ Clean room specifications

Ⓔ Other attachments

Code	Content	Ⓐ Model No. F2000	F3000	F4000	F6000
Ⓑ Port size					
8	Rc1/4	●	●	●	
10	Rc3/8	●	●	●	
15	Rc1/2			●	
20	Rc3/4				●
25	Rc1				●
Ⓒ Option *1 *2					
Bowl	Blank: PC bowl: without drain discharge	●	●	●	●
	C6: PC bowl: drain discharge Rc1/8	●	●	●	●
	M6: Metal bowl: drain discharge Rc1/8	●	●	●	●
Element	Blank: 5 μm	●	●	●	●
	Y: 0.3 μm (submicron)		●	●	●
Differential pressure detection	Blank: Without differential pressure detection port	●	●	●	●
	Q: With differential pressure detection port (Rc1/4)				●
Flow direction	Blank: Standard flow (left → right)	●	●	●	●
	X1: Reverse flow (right → left)	●	●	●	●
Ⓓ Clean room specifications					
P70	Structure/treatment: Dust generation preventing; Material restriction: -	●	●	●	●
P74	Structure/treatment: Dust generation preventing; Material restriction: Copper-based/silicon-based/halogen-based materials (fluorine, chlorine, bromine) are prohibited	●	●	●	●
Ⓔ Other attachments *3 *4					
Blank	Without attachment	●	●	●	●
A8	Rc1/4 piping adaptor set	●	●	●	
A10	Rc3/8 piping adaptor set	●	●	●	
A15	Rc1/2 piping adaptor set	●	●	●	
A20	Rc3/4 piping adaptor set			●	●
A25	Rc1 piping adaptor set				●
A32	Rc1 1/4 piping adaptor set				●
B	C bracket	●	●	●	●

Precautions for model No. selection

*1: Select options per drainage, bowl material, element, and differential pressure detection sections. When selecting options for several items, list options in order from the top.
*2: One pipe plug is attached for options "C6" and "M6".
*3: Piping adaptor set A *00-*-P70 (page 804) is attached.
*4: Refer to pages 804 to 806 for adaptor. The piping adaptor set and C bracket cannot be used at the same time.
*5: Refer to page 781 for max. processing flow when option "Y" is selected.
*6:"P74" is custom order.

Flow characteristics

● F2000-8

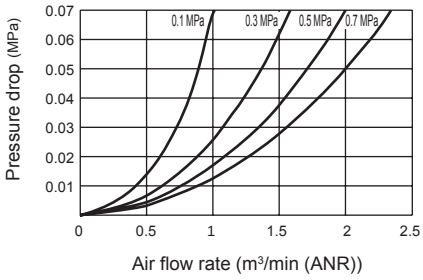

● F2000-10

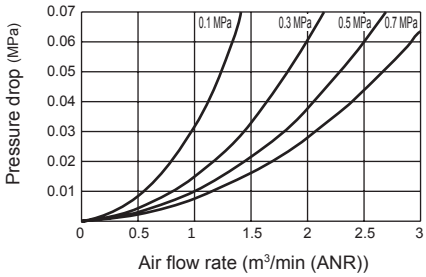

● F3000-8

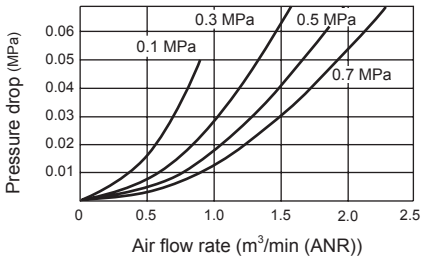

● F3000-10

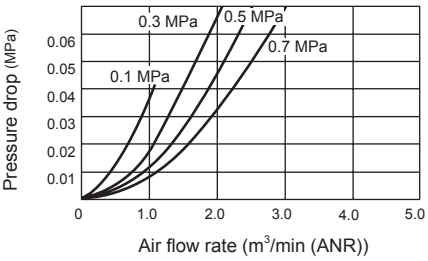

● F4000-8

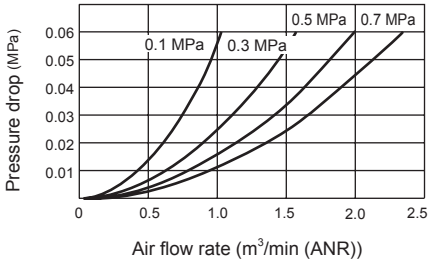

● F4000-10

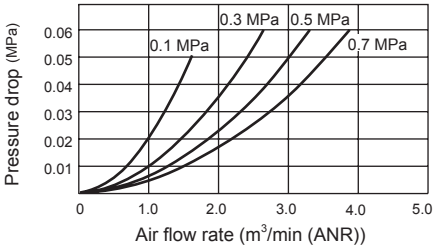

● F4000-15

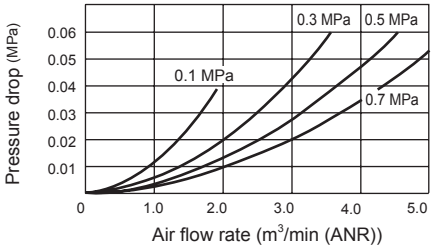

● F6000-20

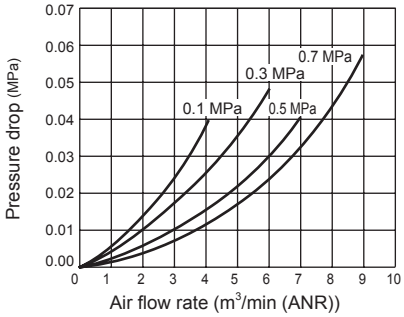

● F6000-25

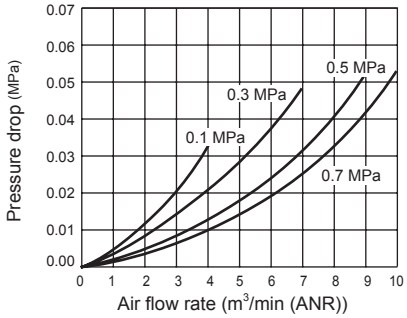

● F3000
F4000-*-Y (0.3 μm element)
F6000

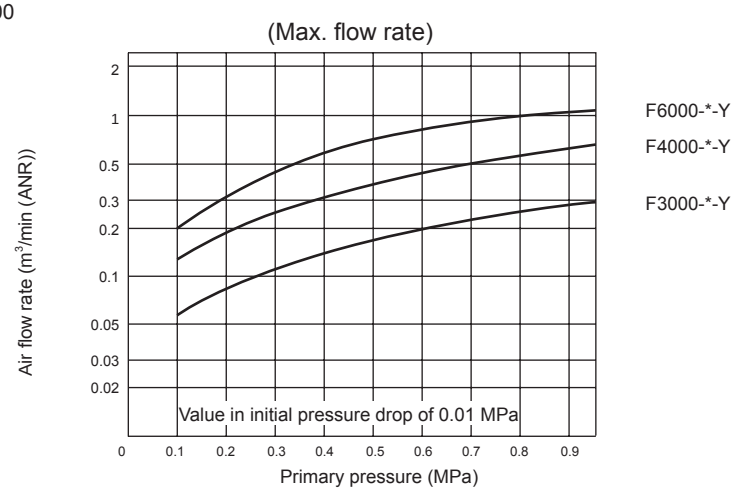

SCPD3
SCM
SSD2
MDC2
SMG
LCM
LCR
LCG
LCX
STM
STG
STR2
MRL2
GRC
Cylinder switch
MN3E MN4E
4GA/B
M4GA/B
MN4GA/B
F.R (module unit)
Clean F.R
Precision R
Press gauge Diff. press gauge
Electro-pneumatic R
Speed controller
Auxiliary valve
Fitting/ tube
Clean air unit
Pressure sensor
Flow rate sensor
Valve for air blow
Ending

Dimensions

● F2000-P70/P74

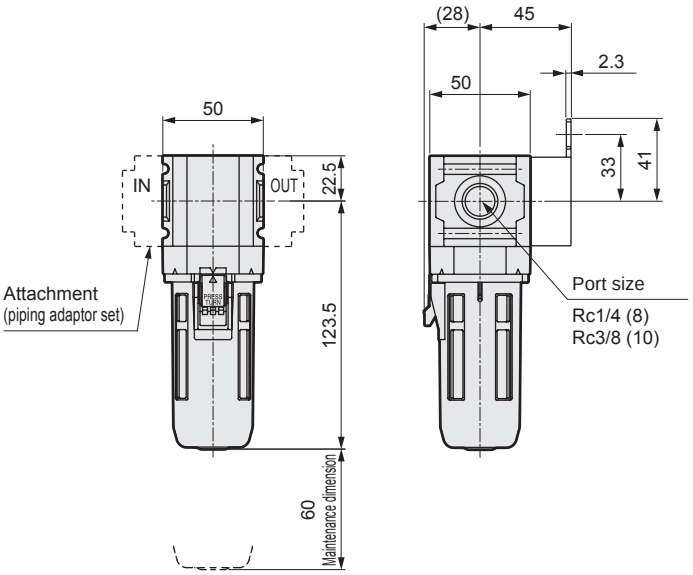

Note : C bracket and piping adaptor set attachments cannot be used at the same time.

[Optional dimensions]

● PC bowl drain discharge Rc1/8 (C6)

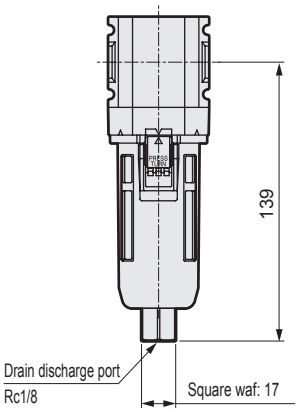

Note: Mount with fixing on square waf, when pipe for drain discharge.

● Metal bowl (M6)

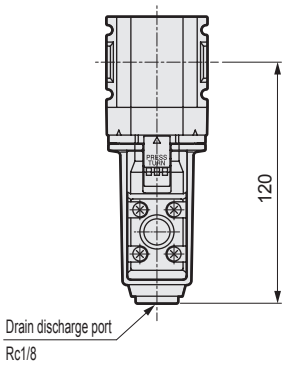

[C bracket dimensions]

● Part model No.: B220-P70
・Material: steel, nickel plate processing

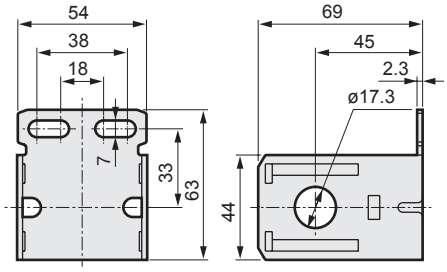

● F3000-P70/P74

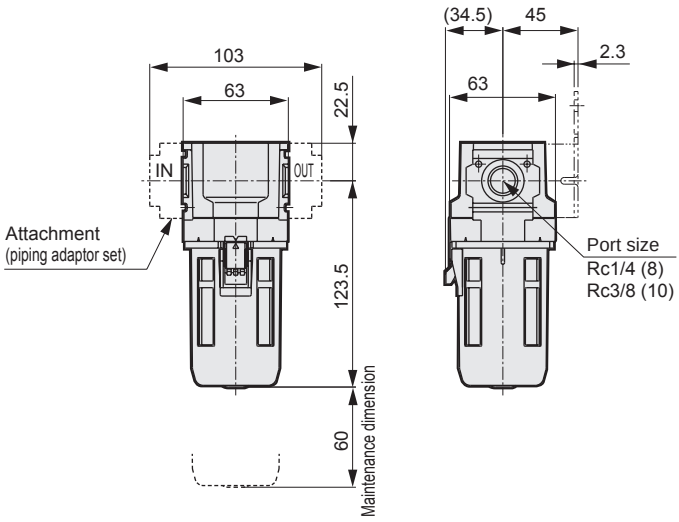

Note : C bracket and piping adaptor set attachments cannot be used at the same time.

[Optional dimensions]

● PC bowl drain discharge Rc1/8 (C6)

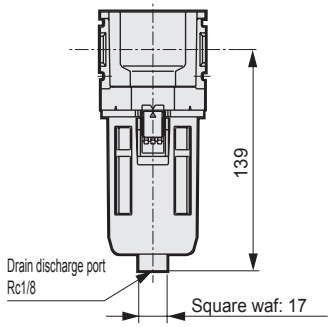

Note: Mount with fixing on square waf, when pipe for drain discharge.

● Metal bowl (M6)

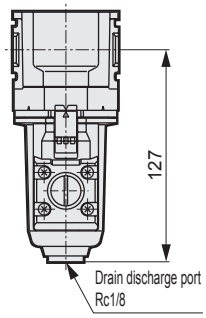

[C bracket dimensions]

● Part model No.: B320-P70
・Material: steel, nickel plate processing

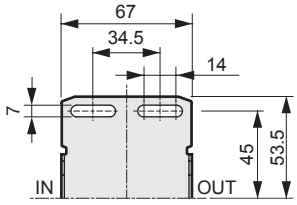

Dimensions

● F4000-P70/P74

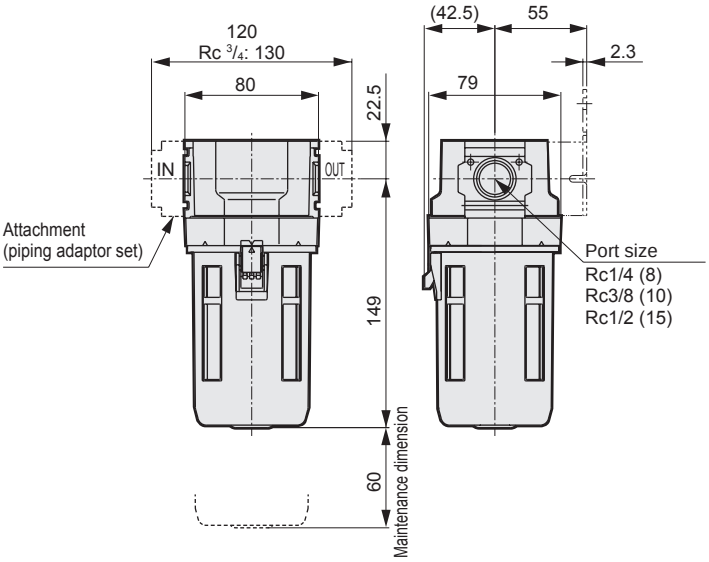

Note : C bracket and piping adaptor set attachments cannot be used at the same time.

[Optional dimensions]

● PC bowl drain discharge Rc1/8 (C6)

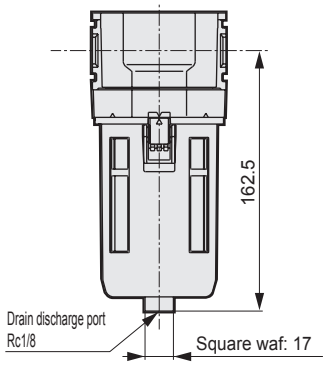

Note: Mount with fixing on square waf, when pipe for drain discharge.

● Metal bowl (M6)

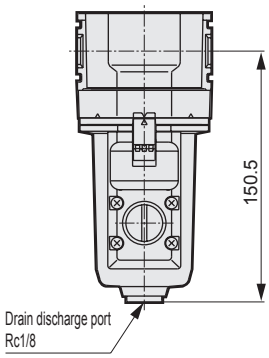

[C bracket dimensions]

● Part model No.: B420-P70
・Material: steel, nickel plate processing

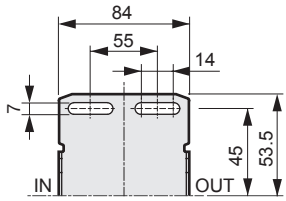

● F6000-P70/P74

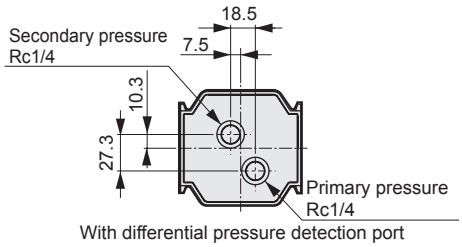

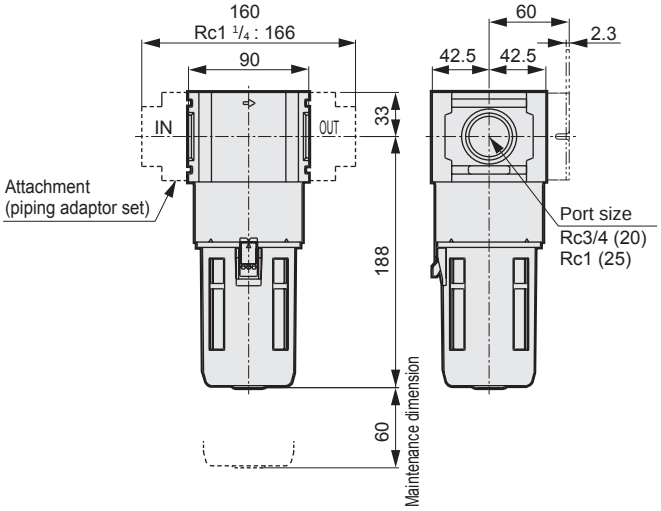

Note : C bracket and piping adaptor set attachments cannot be used at the same time.

[Optional dimensions]

● PC bowl drain discharge Rc1/8 (C6)

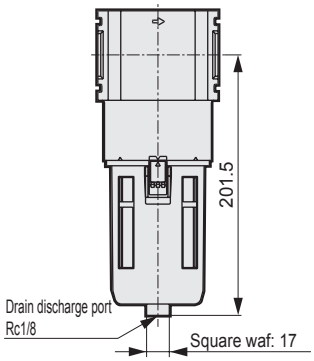

Note: Mount with fixing on square waf, when pipe for drain discharge.

● Metal bowl (M6)

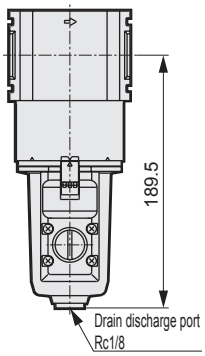

[C bracket dimensions]

● Part model No.: B620-P70
・Material: steel, nickel plate processing

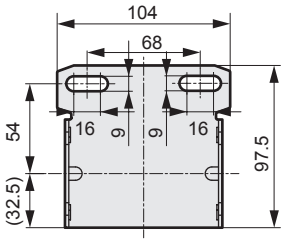

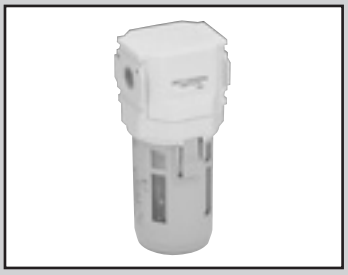

Oil mist filter

M2000/M3000/M4000/M6000 Series

JIS symbol

RoHS CAD

Structure/treatment and material restriction

	Structure/treatment	Material restriction			Model No.
P7 Series	Dust generation preventing				– P70
	Dust generation preventing	Copper-based materials prohibited	Silicon-based materials prohibited	Halogen-based materials prohibited (fluorine, chlorine, bromine)	– P74 Custom order product

Specifications

Descriptions		M2000	M3000	M4000	M6000
Working fluid		Compressed air			
Working pressure	MPa	0.1 to 1.0			
Proof pressure	MPa	1.5			
Weight	kg	0.25	0.28	0.52	0.95

Mantle option name		Blank (M type)	S (S type)	X (X type)
Max. flow rate l/min (ANR) *1 Primary pressure 0.7 MPa	M2000-☐	250	310	310
	M3000-☐	360	450	450
	M4000-☐	825	1000	1000
	M6000-☐	1270	1400	1400
Ambient temperature/fluid temperature	°C	5 to 50		5 to 30
Filtration rating	μm	0.01 (nominal)	0.3	Suction by activated charcoal *4
Secondary side oil concentration	mg/m³	0.01 or less (0.1 or less after oil saturation) *2, *3	0.5 or less *2	0.003 or less *4
Mantle (Element) service life		1 year (6000 hours) or pressure drop 0.1 MPa		- *5

*1: Use the product within the rated flow rate.
If the rated flow is exceeded temporarily, or if the filter is installed at a place with high levels of pulsation, the mantle could be damaged or oil or drainage, etc., could splatter to the secondary side and result in faults at the terminal.
*2: Primary oil content is 30 mg/m³, the inlet air temperature is 21°C, and before the oil is saturated.
*3: Install an oil mist filter (S type) as a pre-filter on the primary side to prevent early clogging.
*4: When an oil mist filter (M Series M type) is installed on the primary side.
*5: The mantle (element) replacement period differs depending on the odor density in compressed air, and thus cannot be clearly indicated.
Consider the total period from the initial installation to when the smell of oil can be confirmed as the effective deodorizing period, and regularly replace.
Keep the primary air temperature at 30°C or less. The deodorizing effect will drop if the temperature is high, so provide heat dissipation measures.

Flow characteristics (Max. processing flow rate)

● M*00-M

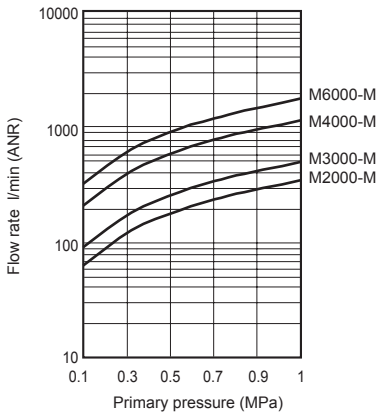

● M*00-S

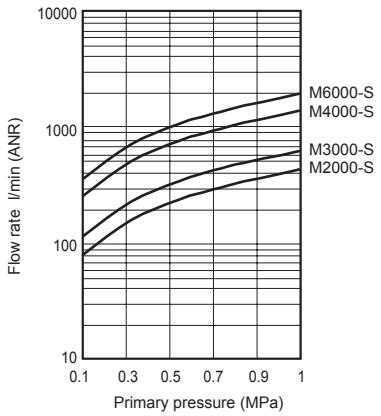

● M*00-X

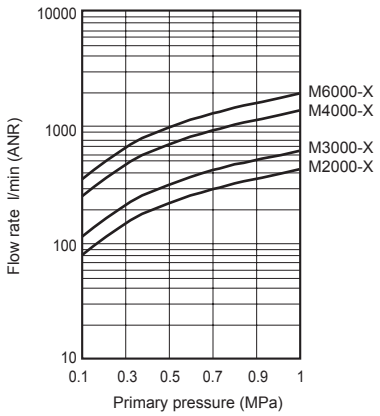

How to order

M3000 — 8 — C6 — P70 — B

Ⓐ Model No.
Ⓑ Port size
Ⓒ Option
Ⓓ Clean room specifications *5
Ⓔ Other attachments

Code	Content	Ⓐ Model No. M2000	M3000	M4000	M6000
Ⓑ Port size					
8	Rc1/4	●	●	●	
10	Rc3/8	●	●	●	
15	Rc1/2			●	
20	Rc3/4				●
25	Rc1				●
Ⓒ Option *1 *2					
Bowl Blank	PC bowl: without drain discharge	●	●	●	●
Bowl C6	PC bowl: drain discharge Rc1/8	●	●	●	●
Bowl M6	Metal bowl: drain discharge Rc1/8	●	●	●	●
Mantle (element) Blank	M type	●	●	●	●
Mantle (element) S	S type	●	●	●	●
Mantle (element) X	X type	●	●	●	●
Differential pressure detection Blank	Without differential pressure detection port	●	●	●	●
Differential pressure detection Q	With differential pressure detection port (Rc1/4)				●
Flow direction Blank	Standard flow (left → right)	●	●	●	●
Flow direction X1	Reverse flow (right → left)	●	●	●	●
Ⓓ Clean room specifications					
	Structure/treatment / Material restriction				
P70	Dust generation preventing / -	●	●	●	●
P74	Dust generation preventing / Copper-based/silicon-based/halogen-based materials (fluorine, chlorine, bromine) are prohibited	●	●	●	●
Ⓔ Other attachments *3 *4					
Blank	Without attachment	●	●	●	●
A8	Rc1/4 piping adaptor set	●	●	●	
A10	Rc3/8 piping adaptor set	●	●	●	
A15	Rc1/2 piping adaptor set	●	●	●	
A20	Rc3/4 piping adaptor set			●	●
A25	Rc1 piping adaptor set				●
A32	Rc1 1/4 piping adaptor set				●
B	C bracket	●	●	●	●

⚠ Precautions for model No. selection

*1: Select options per drainage, bowl material, element, and differential pressure detection sections.
When selecting options for several items, list options in order from the top.
*2: One pipe plug is attached for options "C6" and "M6".
*3: Piping adaptor set A *00-*-P70 (page 804) is attached.
*4: Refer to pages 804 to 806 for adaptor.
The piping adaptor set and C bracket cannot be used at the same time.
*5:"P74" is custom order.

Oil mist filter: How to use optional mantle

Major recommended circuit

◆ S type

F S

Applications

Air for general industry (Secondary oil content 0.5 mg/m^3 or less)

- Air tool
  Air drill/air screw driver
  Air grinder
- Labor-saving device
- Pneumatic jig and tool
- Air chuck
- Air vice
- Precision part cleaning air blow

◆ M type

F S M

Oil less air (Secondary oil content 0.01 mg/m^3 or less)

- Instrumentation
- Measurement
- Logic control
  Movable element/pure fluid element
- Luxury painting
- Precision industry

◆ X type

F S M X

Odorless air (Secondary oil content 0.003 mg/m^3 or less)

- Food industry
- Medical products industry
- Mixing
- Transportation
- Drying
- Package
- Brewing air

Note: The secondary oil content is the value when the primary oil content is 30 mg/m^3, the inlet air temperature is 21°C.

Option code of mantle and shape

Option code	Appearance
Blank (M type)	End plate Black; Plastic foam
S (S type)	End plate Green; Plastic foam
X (X type)	End plate Black; Punching metal

CAUTION: Changes for product upgrades may be made without prior notice.
When placing an order, confirm the option code for the part model No. given here.

Dimensions

● M2000-P70/P74

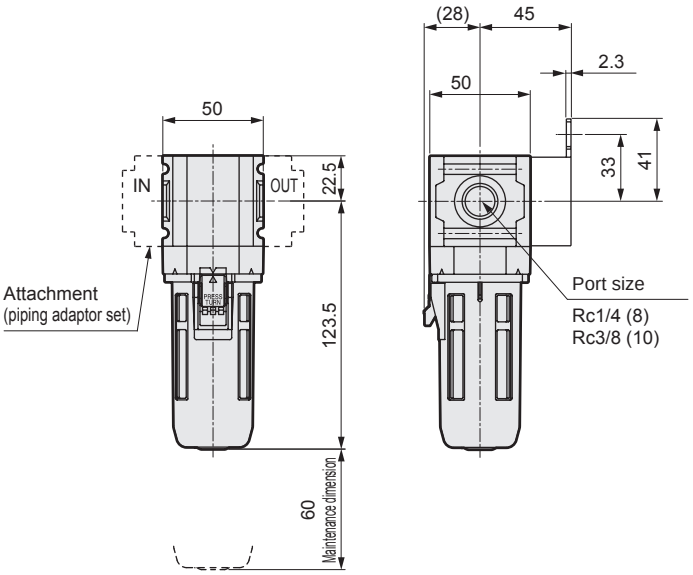

Note : C bracket and piping adaptor set attachments cannot be used at the same time.

[Optional dimensions]

● PC bowl drain discharge Rc1/8 (C6)

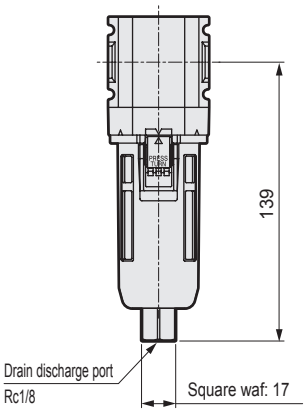

Note: Mount with fixing on square waf, when pipe for drain discharge.

● Metal bowl (M6)

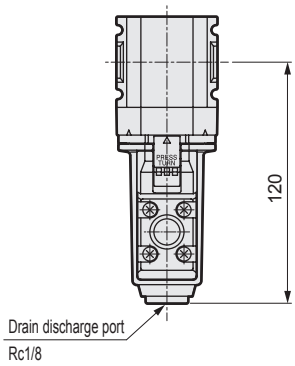

[C bracket dimensions]

● Part model No.: B220-P70

・Material: steel, nickel plate processing

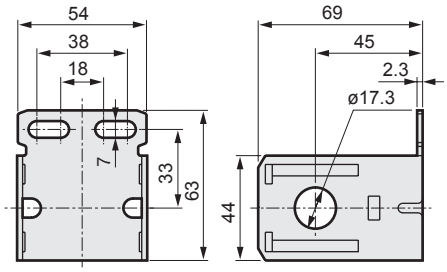

● M3000-P70/P74

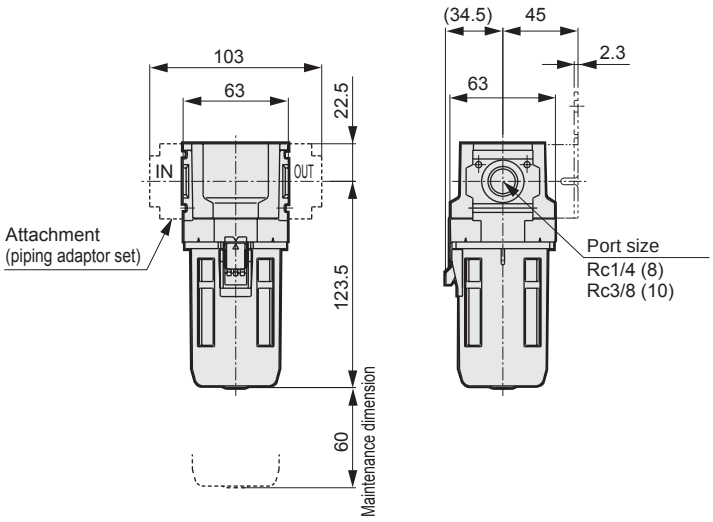

Note : C bracket and piping adaptor set attachments cannot be used at the same time.

[Optional dimensions]

● PC bowl drain discharge Rc1/8 (C6)

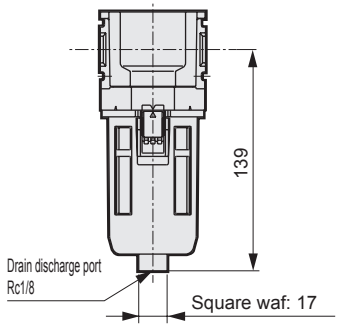

Note: Mount with fixing on square waf, when pipe for drain discharge.

● Metal bowl (M6)

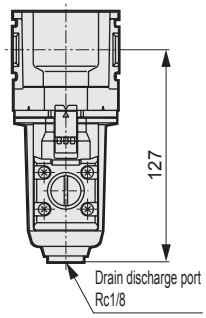

[C bracket dimensions]

● Part model No.: B320-P70

・Material: steel, nickel plate processing

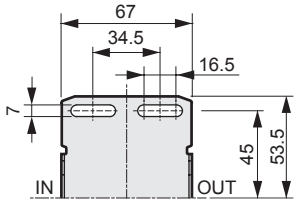

Dimensions

● M4000-P70/P74

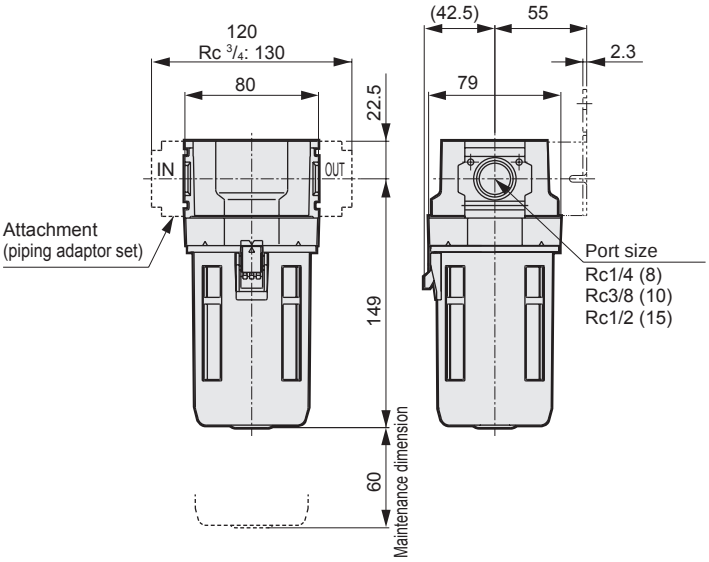

Note : C bracket and piping adaptor set attachments cannot be used at the same time.

[Optional dimensions]

● PC bowl drain discharge Rc1/8 (C6)

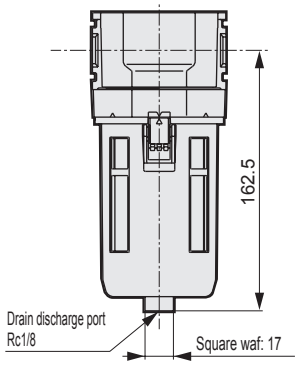

Note: Mount with fixing on square waf, when pipe for drain discharge.

● Metal bowl (M6)

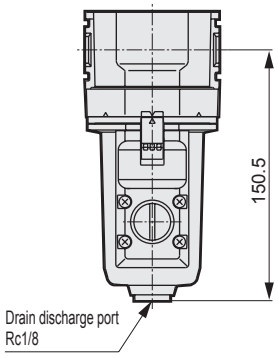

[C bracket dimensions]

● Part model No.: B420-P70
・Material: steel, nickel plate processing

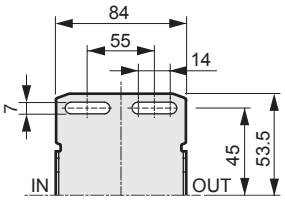

● M6000-P70/P74

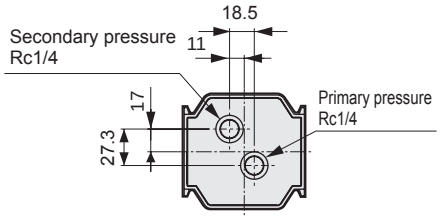

With differential pressure detection port

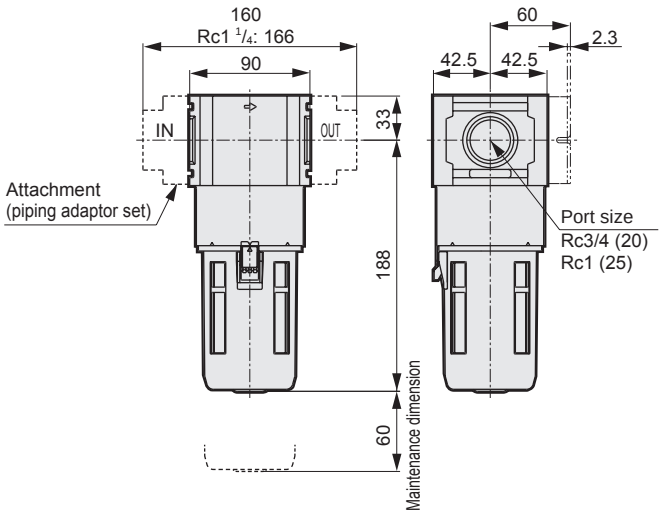

[Optional dimensions]

● PC bowl drain discharge Rc1/8 (C6)

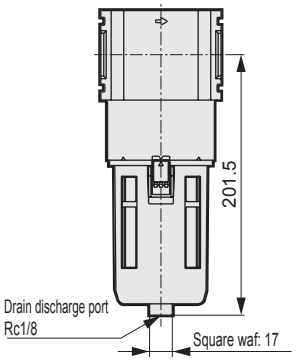

Note: Mount with fixing on square waf, when pipe for drain discharge.

● Metal bowl (M6)

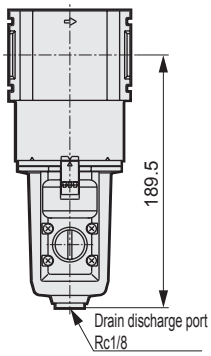

[C bracket dimensions]

● Part model No.: B620-P70
・Material: steel, nickel plate processing

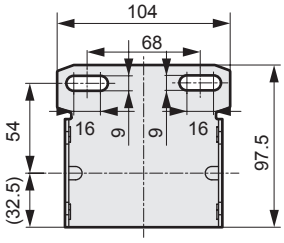

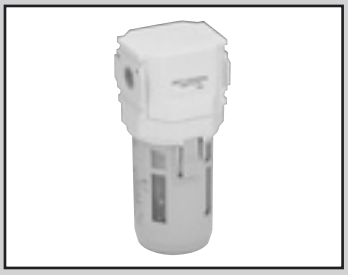

High performance oil mist filter

MX3000/MX4000/MX6000 Series

Secondary oil content 0.001 mg/m^3

Appropriate for optical devices such as optical positioning devices, laser processing systems

JIS symbol

RoHS

Structure/treatment and material restriction

	Structure/treatment	Material restriction			Model No.
P7 Series	Dust generation preventing				– P70
	Dust generation preventing	Copper-based materials prohibited	Silicon-based materials prohibited	Halogen-based materials prohibited (fluorine, chlorine, bromine)	– P74 Custom order product

Specifications

Descriptions	MX3000	MX4000	MX6000
Working fluid	Compressed air		
Working pressure MPa	0.1 to 1.0		
Proof pressure MPa	1.5		
Ambient temperature/fluid temperature °C	5 to 50		
Filtration rating μm	0.01 (nominal)		
Secondary side oil concentration mg/m^3	0.001 or less (0.01 or less after oil saturation) *2, *3		
Processing flow rate ℓ/min (ANR) *1	180	370	670
Weight kg	0.28	0.52	0.95
Mantle (Element) Service life	1 year (6000 hours) or pressure drop 0.1 MPa		

*1: For a primary pressure of 0.7 MPa. Use the product within the max. processing flow rate.
If the max. processing flow is exceeded temporarily, or if the filter is installed at a place with high levels of pulsation, the mantle could be damaged or oil or drainage, etc., could splatter to the secondary side and result in faults at the terminal.

*2: The secondary oil content is the value when the primary oil content is 30 mg/m^3, the inlet air temperature is 21°C, and before the oil is saturated.

*3: Install an oil mist filter (S type) as a pre-filter on the primary side to prevent early clogging.

Flow characteristics (Max. processing flow rate)

● MX*000

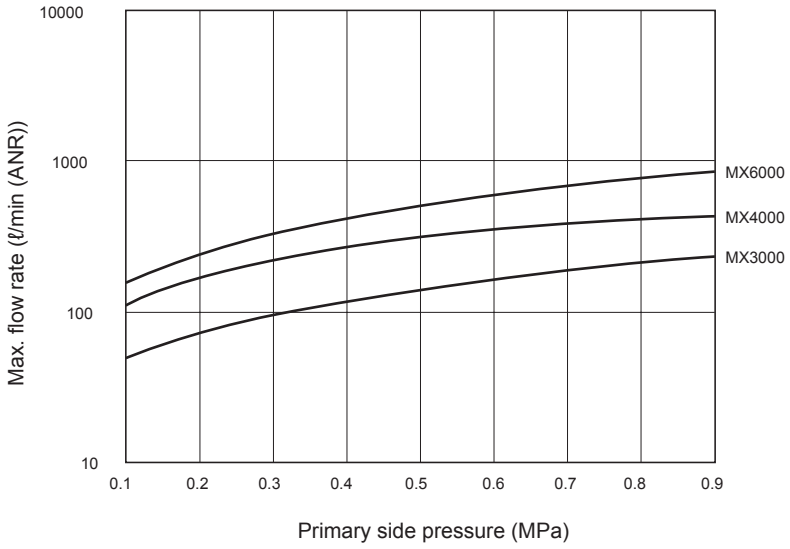

Oil mist filter: How to use optional mantle

Major recommended circuit	Applications	
◆ S type F S	Air for general industry (Secondary oil content 0.5 mg/m^3 or less)	• Air tool Air drill/air screw driver/air grinder • Labor-saving device • Pneumatic jig and tool • Air chuck • Air vice • Precision part cleaning air blow
◆ M type F S M	Oil less air (Secondary oil content 0.01 mg/m^3 or less)	• Instrumentation • Measurement • Logic control Movable element/pure fluid element • Luxury painting • Precision industry
◆ X type F S M X	Odorless air (Secondary oil content 0.003 mg/m^3 or less)	• Food industry • Medical products industry • Mixing • Transportation • Drying • Package • Brewing air
◆ MX type F S MX	Super oil free air (Secondary oil content 0.001 mg/m^3 or less)	• Optical positioning device • Laser finishing machine

Note: The secondary oil content is the value when the primary oil content is 30 mg/m^3, the inlet air temperature is 21°C.

Option code of mantle and shape

	Option Code	Appearance
M*000	Blank (M type)	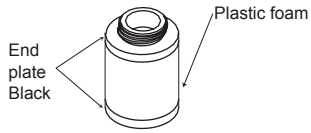
	S (S type)	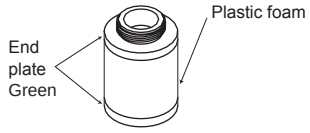
	X (X type)	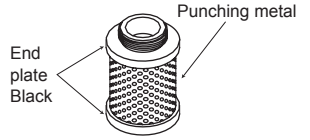
MX*000		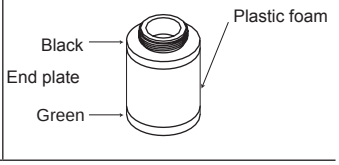

Note: Changes for product upgrades may be made without prior notice.
When placing an order, confirm the option code for the part model No. given here.

SCPD3
SCM
SSD2
MDC2
SMG
LCM
LCR
LCG
LCX
STM
STG
STR2
MRL2
GRC
Cylinder switch
MN3E MN4E
4GA/B
M4GA/B
MN4GA/B
F.R (module unit)
Clean F.R
Precision R
Press gauge Diff. press gauge
Electro-pneumatic R
Speed controller
Auxiliary valve
Fitting/ tube
Clean air unit
Pressure sensor
Flow rate sensor
Valve for air blow
Ending

How to order

MX3000 — 8 — C6 — P70 — B

Ⓐ Model No.
Ⓑ Port size
Ⓒ Option
Ⓓ Clean room specifications Note 5
Ⓔ Other attachments

Code	Content	Ⓐ Model No. MX3000	MX4000	MX6000
Ⓑ Port size				
8	Rc1/4	●	●	
10	Rc3/8	●	●	
15	Rc1/2		●	
20	Rc3/4			●
25	Rc1			●

Ⓒ Option *1 *2					
Bowl	Blank	PC bowl: without drain discharge	●	●	●
	C6	PC bowl: drain discharge Rc1/8	●	●	●
	M6	Metal bowl: drain discharge Rc1/8	●	●	●
Differential pressure detection	Blank	Without differential pressure detection port	●	●	●
	Q	With differential pressure detection port (Rc1/4)			●
Flow direction	Blank	Standard flow (left → right)	●	●	●
	X1	Reverse flow (right → left)	●	●	●

Ⓓ Clean room specifications					
	Structure/treatment	Material restriction			
P70	Dust generation preventing	-	●	●	●
P74	Dust generation preventing	Copper-based/silicon-based/halogen-based materials (fluorine, chlorine, bromine) are prohibited	●	●	●

Ⓔ Other attachments *3 *4					
Blank	Without attachment	●	●	●
A8	Rc1/4 piping adaptor set	●	●	
A10	Rc3/8 piping adaptor set	●	●	
A15	Rc1/2 piping adaptor set	●	●	
A20	Rc3/4 piping adaptor set		●	●
A25	Rc1 piping adaptor set			●
A32	Rc1 1/4 piping adaptor set			●
B	C bracket	●	●	●

Precautions for model No. selection

*1: Select options per drainage, bowl material, element, and differential pressure detection sections.
When selecting options for several items, list options in order from the top.
*2: One pipe plug is attached for options "C6" and "M6".
*3: Piping adaptor set A *00-*-P70 (page 804) is attached.
*4: Refer to pages 804 to 806 for adaptor.
The piping adaptor set and C bracket cannot be used at the same time.
*5:"P74" is custom order.

Dimensions

● MX3000-P70/P74

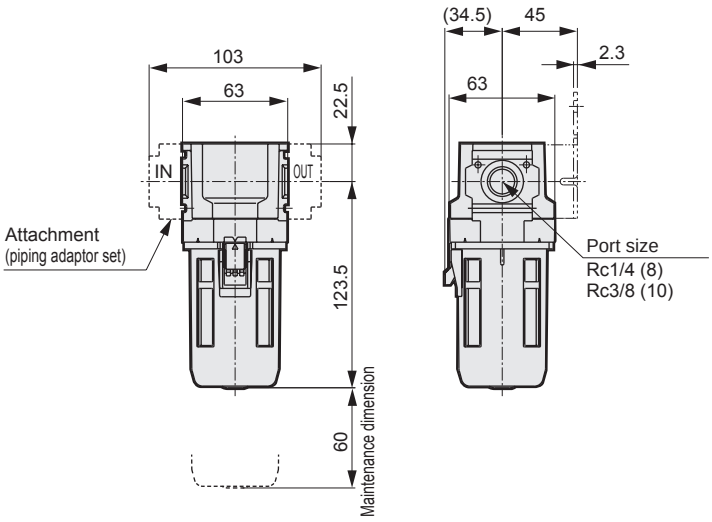

Note : C bracket and piping adaptor set attachments cannot be used at the same time.

[Optional dimensions]

● PC bowl drain discharge Rc1/8 (C6)

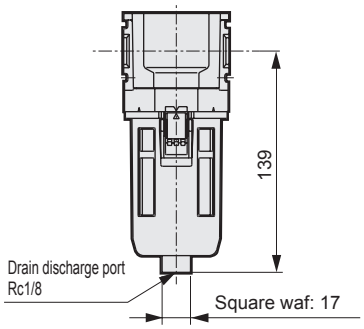

Note: Mount with fixing on square waf, when pipe for drain discharge.

● Metal bowl (M6)

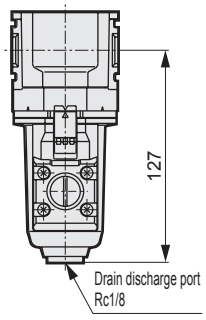

[C bracket dimensions]

● Part model No.: B320-P70
・Material: steel, nickel plate processing

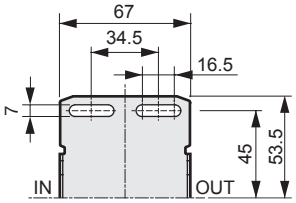

Dimensions

● MX4000-P70/P74

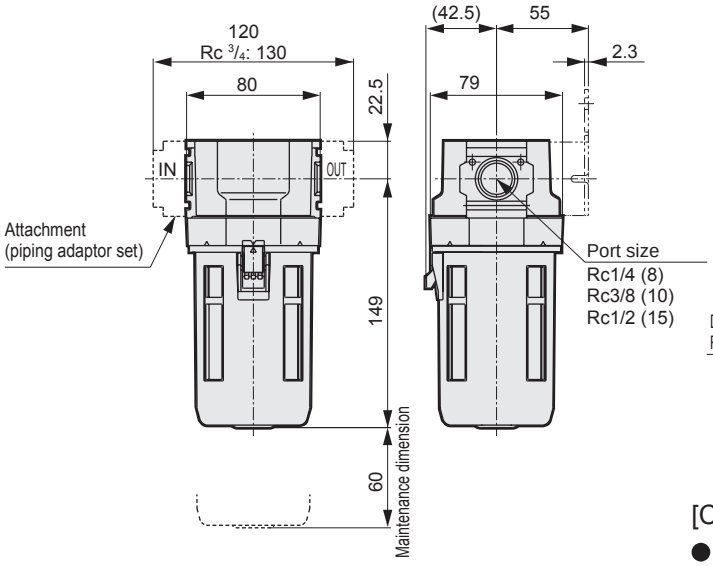

Note : C bracket and piping adaptor set attachments cannot be used at the same time.

[Optional dimensions]

● PC bowl drain discharge Rc1/8 (C6)

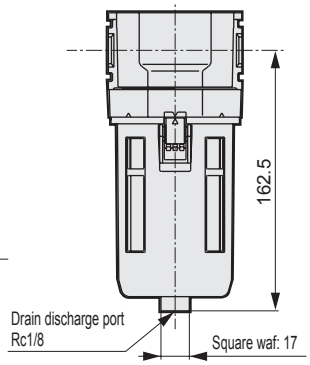

Note: Mount with fixing on square waf, when pipe for drain discharge.

● Metal bowl (M6)

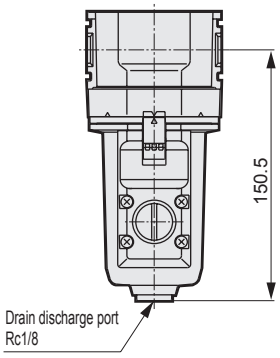

[C bracket dimensions]

● Part model No.: B420-P70
Material: steel, nickel plate processing

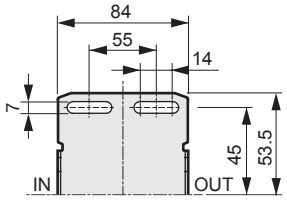

● MX6000-P70/P74

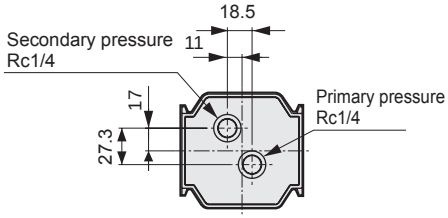

With differential pressure detection port

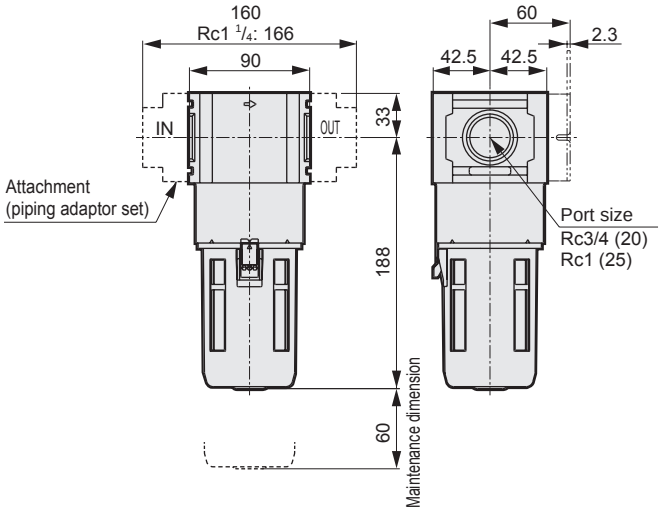

[Optional dimensions]

● PC bowl drain discharge Rc1/8 (C6)

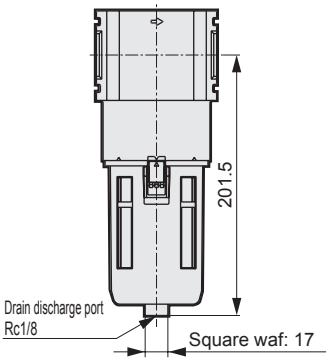

Note: Mount with fixing on square waf, when pipe for drain discharge.

● Metal bowl (M6)

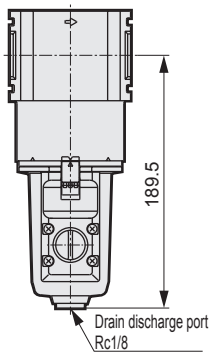

[C bracket dimensions]

● Part model No.: B620-P70
Material: steel, nickel plate processing

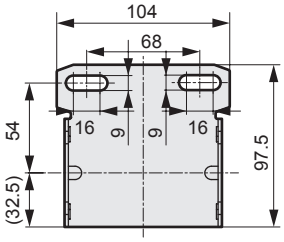

Regulator

R2000/R3000/R4000/R6000 Series

JIS symbol

RoHS CAD

Structure/treatment and material restriction

	Structure	Material restriction			Model No.
P7 Series	Exhaust treatment				–P70
	Exhaust treatment	Copper-based materials prohibited	Silicon-based materials prohibited	Halogen-based materials prohibited (fluorine, chlorine, bromine)	–P74 Custom order product

Specifications

Descriptions		R2000	R3000	R4000	R6000
Working fluid		Compressed air			
Max. working pressure	MPa	1.0			
Proof pressure	MPa	1.5			
Ambient temperature/fluid temperature	°C	5 to 50			
Set pressure	MPa	0.05 to 0.85			
Pressure relief		Nonrelief			
Weight	kg	0.29	0.51	0.75	1.1

How to order

R2000 — 8 -W- ◯ N ◯ – P70 — B *7

R3000 — 8 — ◯ N ◯ – P70 — B

Ⓐ Model No.

Ⓑ Port size

Ⓒ Option

Ⓓ Clean room specifications

Ⓔ Other attachments

Code	Content	Ⓐ Model No. R2000	R3000	R4000	R6000
Ⓑ Port size					
8	Rc1/4	●	●	●	
10	Rc3/8	●	●	●	
15	Rc1/2			●	
20	Rc3/4				●
25	Rc1				●
Ⓒ Option *2 *3 *4					
Pressure range: Blank	0.05 to 0.85 MPa	●	●	●	●
Pressure range: L	0.05 to 0.35 MPa	●	●	●	●
Pressure relief: N	Nonrelief	●	●	●	●
Pressure gauge *8: Blank	With standard pressure gauge (G401) *1	●	●	●	●
Pressure gauge *8: T	Without pressure gauge (gauge port (Rc1/4) is assembled with sealed)	●	●	●	●
Pressure gauge *8: T8	For attaching pressure gauge (gauge port (Rc1/4) is assembled with ventilated)	●	●	●	●
Pressure gauge *8: T6	For attaching pressure gauge (gauge port (Rc1/8) is assembled with ventilated)	●	●	●	●
Flow direction: Blank	Standard flow (left → right)	●	●	●	●
Flow direction: X1	Reverse flow (right → left)	●	●	●	●
Ⓓ Clean room specifications					
	Structure				
P70	Exhaust treatment	●	●	●	●
Ⓔ Other attachments *5 *6					
Blank	Without attachment	●	●	●	●
A8	Rc1/4 piping adaptor set	●	●	●	
A10	Rc3/8 piping adaptor set	●	●	●	
A15	Rc1/2 piping adaptor set	●	●	●	
A20	Rc3/4 piping adaptor set			●	●
A25	Rc1 piping adaptor set				●
A32	Rc1 1/4 piping adaptor set				●
B	C bracket	●	●	●	●
B3	L bracket	●	●	●	●
B4	B bracket	●			
E1	Fitting (pressure relief port) *1	●	●	●	●
GX59	G59D-8-P10-P70 (L: G59D-8-P04-P70) *1	●	●	●	●
GY59	G59D-8-P10-P94 (L: G59D-8-P04-P94)	●	●	●	●

⚠ Precautions for model No. selection

*1: Attachment for options made of brass. All others are attachments for options not made of copper-based materials.
*2: When selecting options for several items, list options in order from the top. Be sure to select "N" non-pressure relief.
*3: If "L" is selected for pressure range, a low pressure gauge (0 to 0.4 MPa) is used.
*4: For "T", "T8", "T6", a gauge plug is assembled instead of a pressure gauge. The gauge port for "T", "T8" is Rc1/4 and T6 is Rc1/8.
*5: Piping adaptor set A *00-*-P70 (page 804) is attached.
*6: Refer to pages 804 to 806 for adaptor, 858 for pressure gauge. The piping adaptor set and C bracket cannot be used at the same time.
*7: Add "-W" only for R2000.
*8: When option "T6" is selected, the attachment "GX59", "GY59" has a different thread size, so it cannot be selected together.

How to order (custom order product)

R2000 — 8 -W- ◯ N ◯ – P74 — B *6
R3000 — 8 — ◯ N ◯ – P74 — B

Ⓐ Model No.
Ⓑ Port size
Ⓒ Option
Ⓓ Clean room specifications
Ⓔ Other attachments

Code	Content	Ⓐ Model No. R2000	R3000	R4000	R6000
Ⓑ Port size					
8	Rc1/4	●	●	●	
10	Rc3/8	●	●	●	
15	Rc1/2			●	
20	Rc3/4				●
25	Rc1				●
Ⓒ Option *1 *2 *3					
Pressure range Blank	0.05 to 0.85 MPa	●	●	●	●
Pressure range L	0.05 to 0.35 MPa	●	●	●	●
Pressure relief N	Nonrelief	●	●	●	●
Pressure gauge *8 T	Without pressure gauge (gauge port (Rc1/4) is assembled with sealed)	●	●	●	●
Pressure gauge *8 T8	For attaching pressure gauge (gauge port (Rc1/4) is assembled with ventilated)	●	●	●	●
Pressure gauge *8 T6	For attaching pressure gauge (gauge port (Rc1/8) is assembled with ventilated)	●	●	●	●
Flow direction Blank	Standard flow (left → right)	●	●	●	●
Flow direction X1	Reverse flow (right → left)	●	●	●	●
Ⓓ Clean room specifications					
Structure	Material restriction				
P74 Exhaust treatment	Copper-based/silicon-based/halogen-based materials (fluorine, chlorine, bromine) are prohibited	●	●	●	●
Ⓔ Other attachments *4 *5					
Blank	Without attachment	●	●	●	●
A8	Rc1/4 piping adaptor set	●	●	●	
A10	Rc3/8 piping adaptor set	●	●	●	
A15	Rc1/2 piping adaptor set	●	●	●	
A20	Rc3/4 piping adaptor set			●	●
A25	Rc1 piping adaptor set				●
A32	Rc1 1/4 piping adaptor set				●
B	C bracket	●	●	●	●
B3	L bracket	●	●	●	●
B4	B bracket	●			
E1	Fitting (pressure relief port) *7	●	●	●	●
GY59	G59D-8-P10-P94 (L: G59D-8-P04-P94)	●	●	●	●

⚠ Precautions for model No. selection

*1: When selecting options for several items, list options in order from the top. Be sure to select "N" non-pressure relief.
*2: If "L" is selected for pressure range, a low pressure gauge (0 to 0.4 MPa) is used.
*3: For "T", "T8", "T6", a gauge plug is assembled instead of a pressure gauge. The gauge port for "T", "T8" is Rc1/4 and T6 is Rc1/8.
*4: Piping adaptor set A *00-*-P70 (page 784) is attached.
*5: Refer to pages 784 to 786 for adaptor, 838 for pressure gauge.
The piping adaptor set and C bracket cannot be used at the same time.
*6: Add "-W" only for R2000.
*7: For the fittings, copper-based materials are used.
*8: When option "T6" is selected, the attachment "GY59" has a different thread size, so it cannot be selected together.

Flow characteristics

● R2000-8

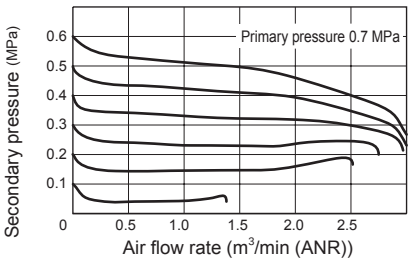

● R2000-10

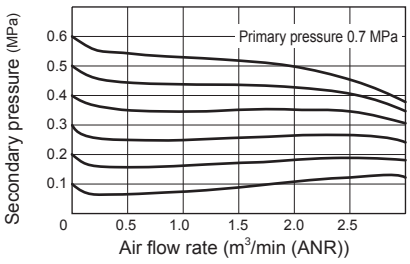

● R3000-8

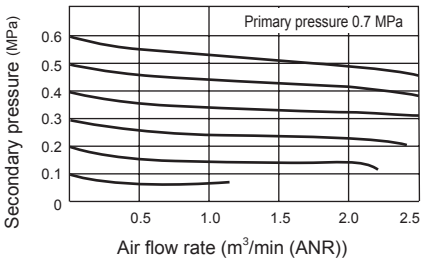

● R3000-10

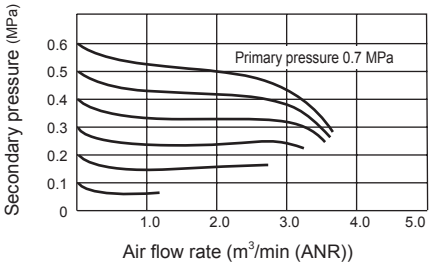

● R4000-8

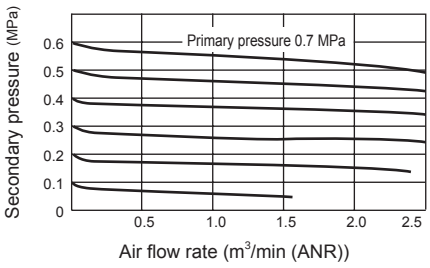

● R4000-10

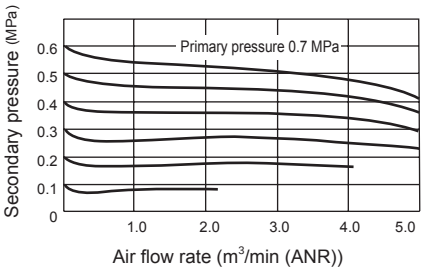

● R4000-15

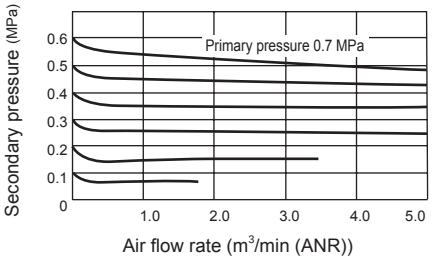

● R6000-20

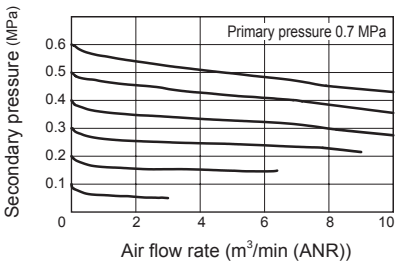

● R6000-25

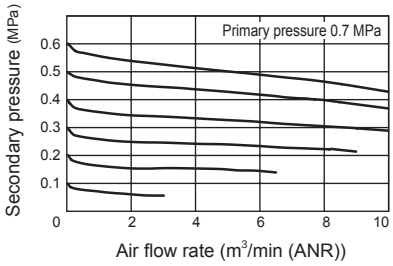

Pressure characteristics

● R2000

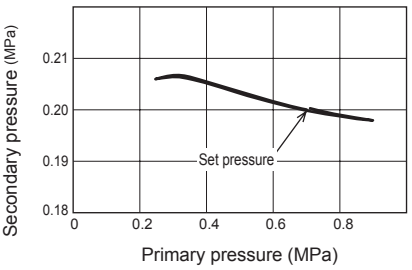

● R3000

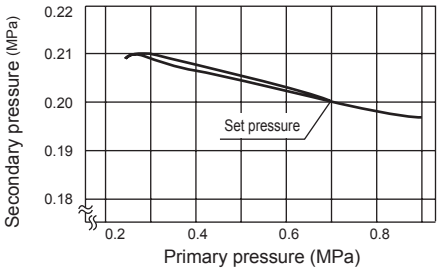

● R4000

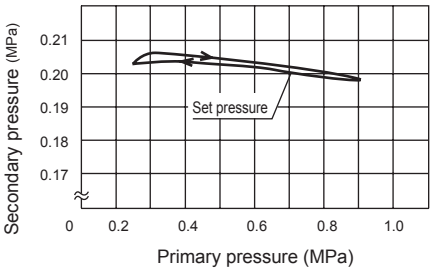

● R6000

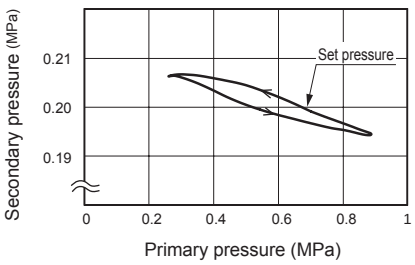

MEMO

SCPD3
SCM
SSD2
MDC2
SMG
LCM
LCR
LCG
LCX
STM
STG
STR2
MRL2
GRC
Cylinder switch
MN3E MN4E
4GA/B
M4GA/B
MN4GA/B
F.R (module unit)
Clean F.R
Precision R
Press gauge Diff. press gauge
Electro-pneumatic R
Speed controller
Auxiliary valve
Fitting/ tube
Clean air unit
Pressure sensor
Flow rate sensor
Valve for air blow
Ending

Dimensions

● R2000-P70/P74

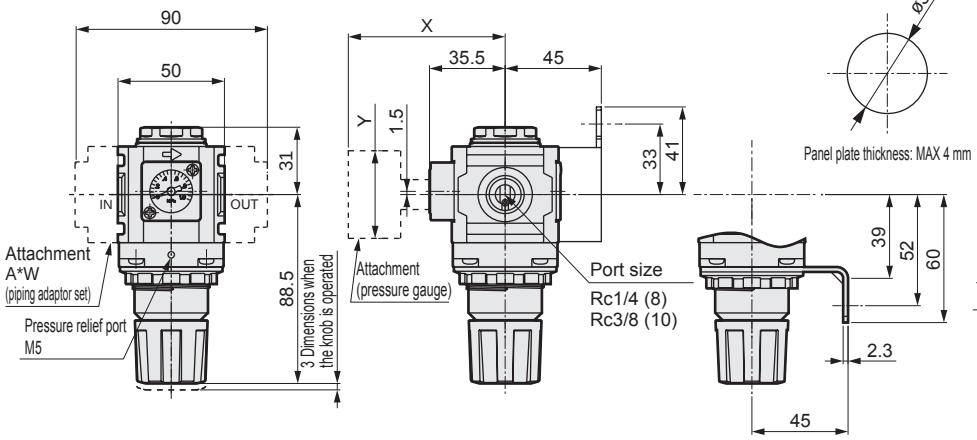

Table of optional dimensions with pressure gauge

Attached pressure gauge	X	Y
GX59	80	ø52
GY59	82.5	ø52

● Fitting
Part model No.: R4000-E1-P70
・Material: brass, nickel plate processing

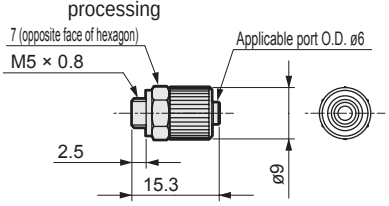

[Bracket dimensions]

● C bracket
Part model No.: B220-P70
・Material: steel, nickel plate processing

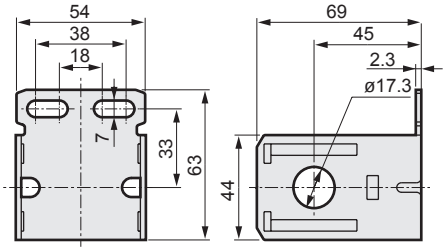

● L bracket
Part model No.: B230-P70
・Material: steel, nickel plate processing

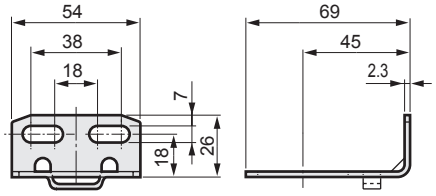

● B bracket
Part model No.: B240-P70
・Material: steel, nickel plate processing

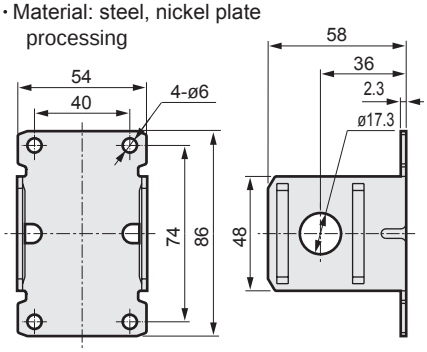

● R3000-P70/P74

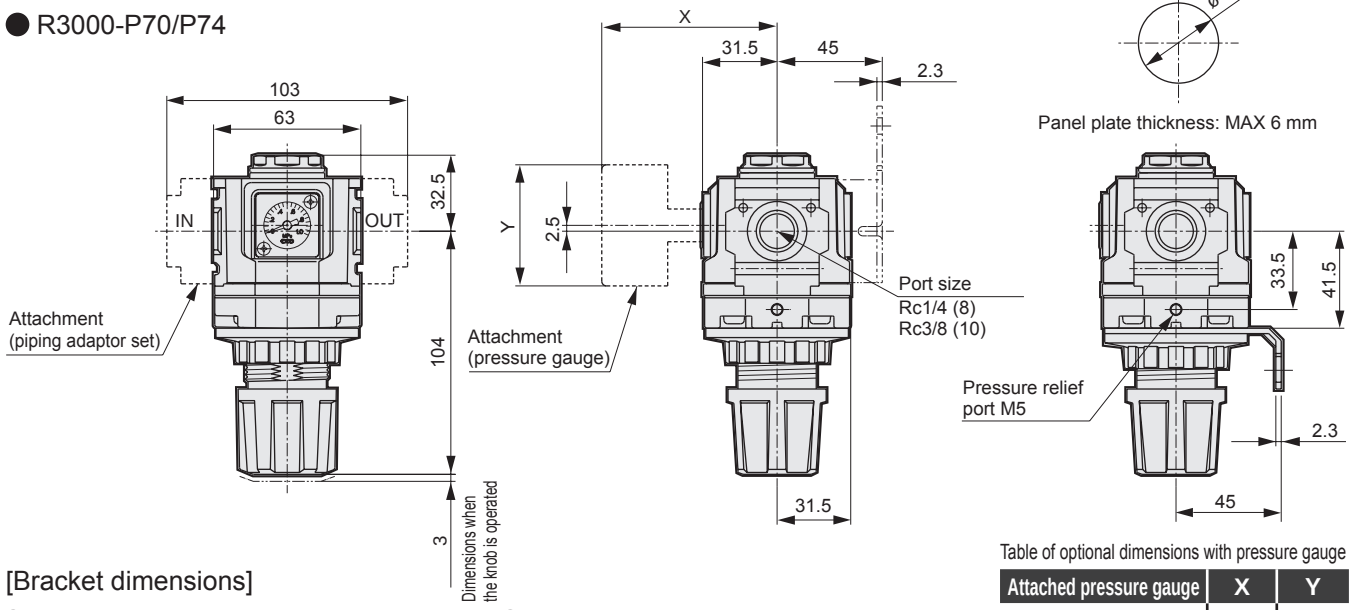

Table of optional dimensions with pressure gauge

Attached pressure gauge	X	Y
GX59	76.5	ø52
GY59	79	ø52

[Bracket dimensions]

● C bracket
Part model No.: B320-P70
・Material: steel, nickel plate processing

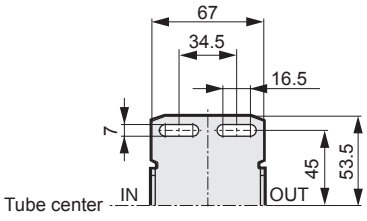

● L bracket
Part model No.: B330-P70
・Material: steel, nickel plate processing

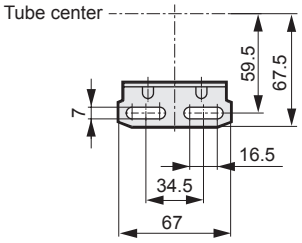

● Fitting
Part model No.: R4000-E1-P70
・Material: brass, nickel plate processing

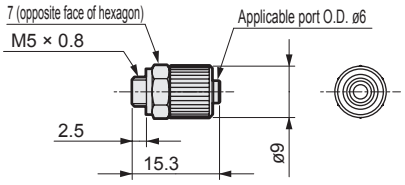

Dimensions

● R4000-P70/P74

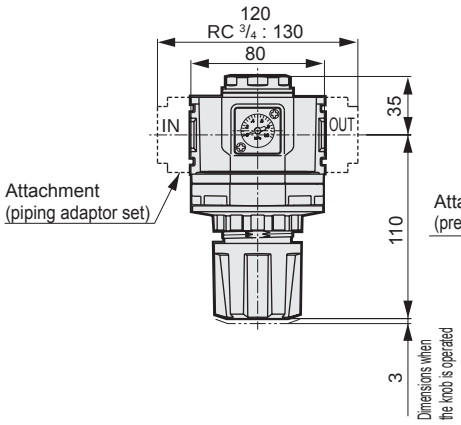

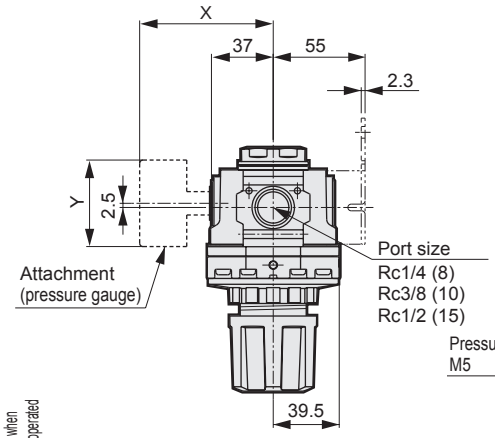

Panel cut dimension

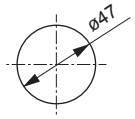

Panel plate thickness: MAX 4 mm

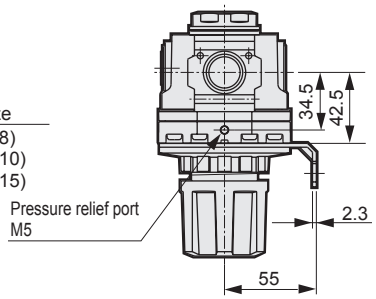

Table of optional dimensions with pressure gauge

Attached pressure gauge	X	Y
GX59	81.5	ø52
GY59	84	ø52

[Bracket dimensions]

● C bracket
Part model No.: B420-P70
・Material: steel, nickel plate processing

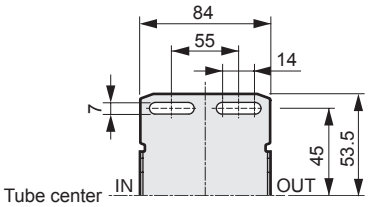

● L bracket
Part model No.: B430-P70
・Material: steel, nickel plate processing

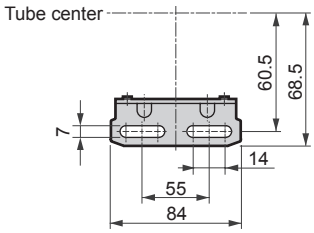

● Fitting
Part model No.: R4000-E1-P70
・Material: brass, nickel plate processing

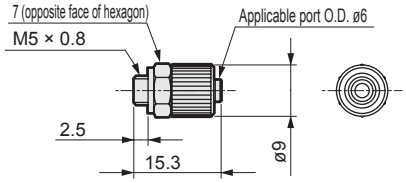

● R6000-P70/P74

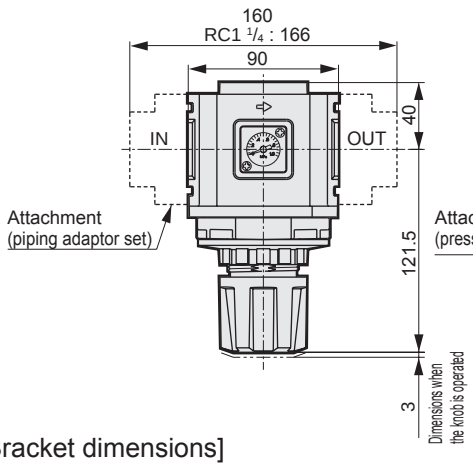

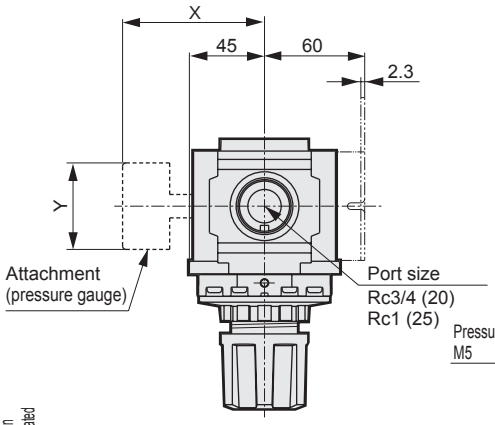

Panel cut dimension

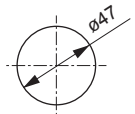

Panel plate thickness: MAX 4 mm

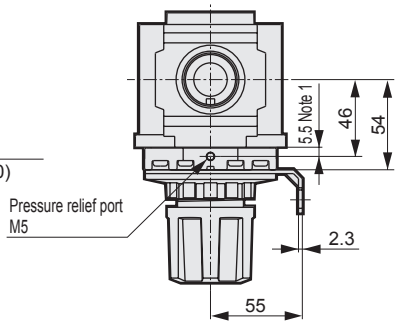

Note 1: Dimensions table is applied. Use fittings available for mounting.

[Bracket dimensions]

● C bracket
Part model No.: B620-P70
・Material: steel, nickel plate processing

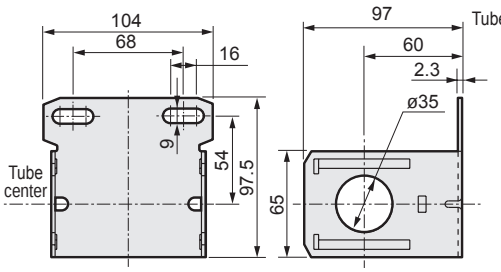

● L bracket
Part model No.: B430-P70
・Material: steel, nickel plate processing

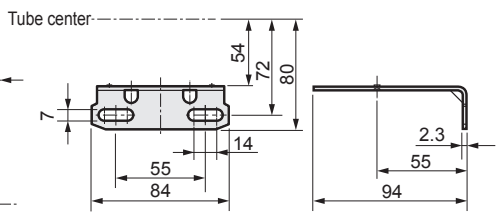

Table of optional dimensions with pressure gauge

Attached pressure gauge	X	Y
GX59	85	ø52
GY59	87.5	ø52

● Fitting
Part model No.: R4000-E1-P70
・Material: brass, nickel plate processing

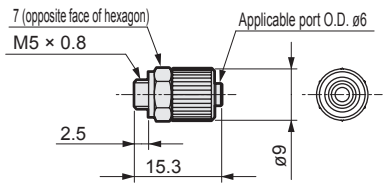

Reverse regulator

R2100/R3100/R4100/R6100 Series

JIS symbol

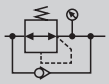

RoHS CAD

Structure/treatment and material restriction

	Structure	Material restriction			Model No.
P7 Series	Exhaust treatment				–P70
	Exhaust treatment	Copper-based materials prohibited	Silicon-based materials prohibited	Halogen-based materials prohibited (fluorine, chlorine, bromine)	–P74 Custom order product

Specifications

Descriptions		R2100	R3100	R4100	R6100
Working fluid		Compressed air			
Max. working pressure	MPa	1.0			
Proof pressure	MPa	1.5			
Ambient temperature/fluid temperature	°C	5 to 50			
Set pressure	MPa	0.05 to 0.85			
Pressure relief		Nonrelief			
Weight	kg	0.29	0.51	0.75	1.1

How to order

R2100 – 8 -W- ◯ N ◯ – P70 — B *8

R3100 – 8 — ◯ N ◯ – P70 — B

Ⓐ Model No.

Ⓑ Port size

Ⓒ Option

Ⓓ Clean room specifications

Ⓔ Other attachments

Code	Content	Ⓐ Model No. R2100	R3100	R4100	R6100
Ⓑ Port size					
8	Rc1/4	●	●	●	
10	Rc3/8	●	●	●	
15	Rc1/2			●	●
20	Rc3/4				●
25	Rc1				●
Ⓒ Option *2 *3 *4 *5					
Pressure range: Blank	0.05 to 0.85 MPa	●	●	●	●
Pressure range: L	0.05 to 0.35 MPa	●	●	●	●
Pressure relief: N	Nonrelief	●	●	●	●
Pressure gauge *9: Blank	With standard pressure gauge (G401) *1	●	●	●	●
Pressure gauge *9: T	Without pressure gauge (gauge port (Rc1/4) is assembled with sealed)	●	●	●	●
Pressure gauge *9: T8	For attaching pressure gauge (gauge port (Rc1/4) is assembled with ventilated)	●	●	●	●
Pressure gauge *9: T6	For attaching pressure gauge (gauge port (Rc1/8) is assembled with ventilated)	●	●	●	●
Flow direction: Blank	Standard flow (left → right)	●	●	●	●
Flow direction: X1	Reverse flow (right → left)	●	●	●	●
Ⓓ Clean room specifications					
	Structure				
P70	Exhaust treatment	●	●	●	●
Ⓔ Other attachments *6 *7					
Blank	Without attachment	●	●	●	●
A8	Rc1/4 piping adaptor set	●	●	●	
A10	Rc3/8 piping adaptor set	●	●	●	
A15	Rc1/2 piping adaptor set	●	●	●	
A20	Rc3/4 piping adaptor set			●	●
A25	Rc1 piping adaptor set				●
A32	Rc1 1/4 piping adaptor set				●
B	C bracket	●	●	●	●
B3	L bracket	●	●	●	●
B4	B bracket	●			
E1	Fitting (pressure relief port) *1	●	●	●	●
GX59	G59D-8-P10-P70 (L: G59D-8-P04-P70) *1	●	●	●	●
GY59	G59D-8-P10-P94 (L: G59D-8-P04-P94)	●	●	●	●

⚠ Precautions for model No. selection

*1: Attachment for options made of brass. All others are attachments for options not made of copper-based materials.
*2: When selecting options for several items, list options in order from the top. Be sure to select "N" non-pressure relief.
*3: If "L" is selected for pressure range, a low pressure gauge (0 to 0.4 MPa) is used.
***4: Positions of a check valve and pressure gauge cannot be changed. If the reverse direction of IN and OUT is required, indicate "X1" in the end of optional section.**
*5: For "T", "T8", "T6", a gauge plug is assembled instead of a pressure gauge. The gauge port for "T", "T8" is Rc1/4 and T6 is Rc1/8.
*6: Piping adaptor set A*00-*-P70 (page 804) is attached.
*7: Refer to pages 804 to 806 for adaptor, 858 for pressure gauge. The piping adaptor set and C bracket cannot be used at the same time.
*8: Add "-W" only for R2100.
*9: When option "T6" is selected, the attachment "GX59", "GY59" has a different thread size, so it cannot be selected together.

How to order (custom order product)

R2100 — 8 -W- ◯ N ◯ – P74 — B *7
R3100 — 8 — ◯ N ◯ – P74 — B

Ⓐ Model No.
Ⓑ Port size
Ⓒ Option
Ⓓ Clean room specifications
Ⓔ Other attachments

Code		Content	Ⓐ Model No. R2100	R3100	R4100	R6100
Ⓑ Port size						
8		Rc1/4	●	●	●	
10		Rc3/8	●	●	●	
15		Rc1/2			●	●
20		Rc3/4				●
25		Rc1				●
Ⓒ Option *1 *2 *3 *4						
Pressure range	Blank	0.05 to 0.85 MPa	●	●	●	●
	L	0.05 to 0.35 MPa	●	●	●	●
Pressure relief	N	Nonrelief	●	●	●	●
Pressure gauge *9	T	Without pressure gauge (gauge port (Rc1/4) is assembled with sealed)	●	●	●	●
	T8	For attaching pressure gauge (gauge port (Rc1/4) is assembled with ventilated)	●	●	●	●
	T6	For attaching pressure gauge (gauge port (Rc1/8) is assembled with ventilated)	●	●	●	●
Flow direction	Blank	Standard flow (left → right)	●	●	●	●
	X1	Reverse flow (right → left)	●	●	●	●
Ⓓ Clean room specifications						
	Structure	Material restriction				
P74	Exhaust treatment	Copper-based/silicon-based/halogen-based materials (fluorine, chlorine, bromine) are prohibited	●	●	●	●
Ⓔ Other attachments *5 *6						
Blank		Without attachment	●	●	●	●
A8		Rc1/4 piping adaptor set	●	●	●	
A10		Rc3/8 piping adaptor set	●	●	●	
A15		Rc1/2 piping adaptor set	●	●	●	
A20		Rc3/4 piping adaptor set			●	●
A25		Rc1 piping adaptor set				●
A32		Rc1 1/4 piping adaptor set				●
B		C bracket	●	●	●	●
B3		L bracket	●	●	●	●
B4		B bracket	●			
E1		Fitting (pressure relief port) *8	●	●	●	●
GY59		G59D-8-P10-P94 (L: G59D-8-P04-P94)	●	●	●	●

⚠ Precautions for model No. selection

*1: When selecting options for several items, list options in order from the top. Be sure to select "N" non-pressure relief.
*2: If "L" is selected for pressure range, a low pressure gauge (0 to 0.4 MPa) is used.
***3: Positions of a check valve and pressure gauge cannot be changed. If the reverse direction of IN and OUT is required, indicate "X1" in the end of optional section.**
*4: For "T", "T8", "T6", a gauge plug is assembled instead of a pressure gauge. The gauge port for "T", "T8" is Rc1/4 and T6 is Rc1/8.
*5: Piping adaptor set A*00-*-P70 (page 804) is attached.
*6: Refer to pages 804 to 806 for adaptor, 858 for pressure gauge. The piping adaptor set and C bracket cannot be used at the same time.
*7: Add "-W" only for R2100.
*8: For the fittings, copper-based materials are used.
*9: When option "T6" is selected, the attachment "GY59" has a different thread size, so it cannot be selected together

Functional explanation

When the primary pressure is introduced from the IN side, the check valve functions as a regular regulator because it closes with primary pressure and spring load. When primary pressure is released by a switching valve such as a shut-off valve, the check valve opens with secondary pressure. Pressure in the diaphragm chamber is released and pressure drops. This causes the diaphragm to be pressed down by the pressure adjustment spring. The main valve (valve assembly) opens, and the air on the OUT side is discharged.

● Circuit diagram
When pressure on cylinder head end and rod end differs.

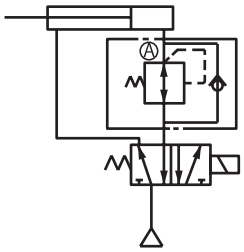

Note: For the regulator's set pressure, set the back pressure A when the primary pressure is released within the range shown in the graph "Set pressure range for back pressure". (Refer to page 800 for the graph)

SCPD3
SCM
SSD2
MDC2
SMG
LCM
LCR
LCG
LCX
STM
STG
STR2
MRL2
GRC
Cylinder switch
MN3E MN4E
4GA/B
M4GA/B
MN4GA/B
F.R (module unit)
Clean F.R
Precision R
Press gauge Diff. press gauge
Electro-pneumatic R
Speed controller
Auxiliary valve
Fitting/ tube
Clean air unit
Pressure sensor
Flow rate sensor
Valve for air blow
Ending

Flow characteristics

● R2100-8

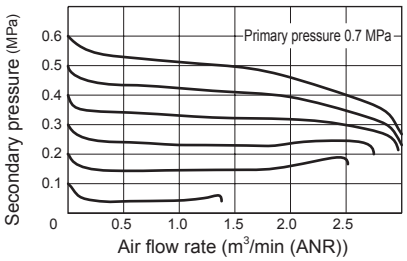

● R2100-10

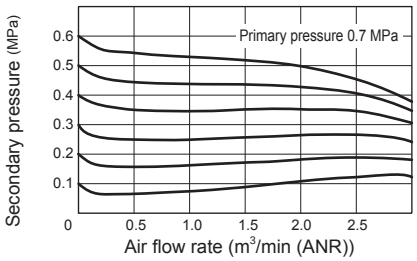

● R3100-8

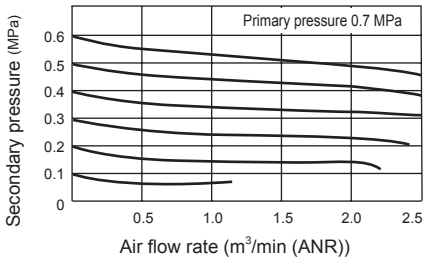

● R3100-10

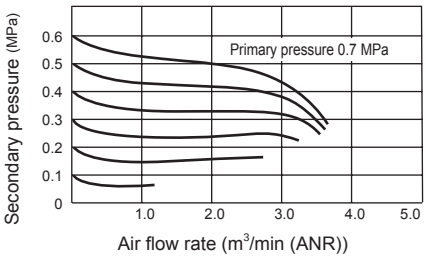

● R4100-8

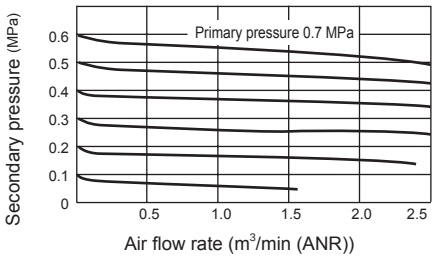

● R4100-10

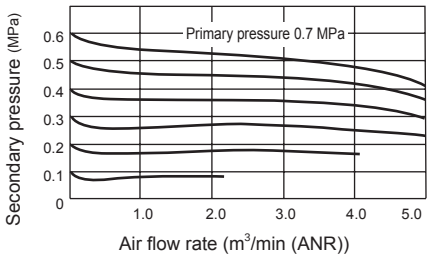

● R4100-15

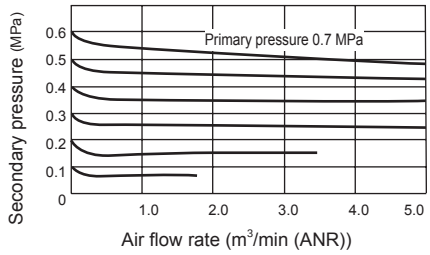

● R6100-20

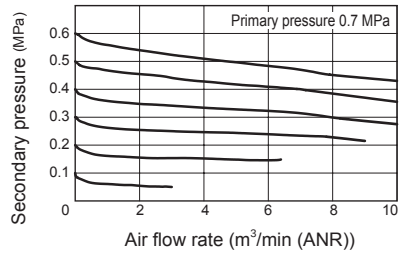

● R6100-25

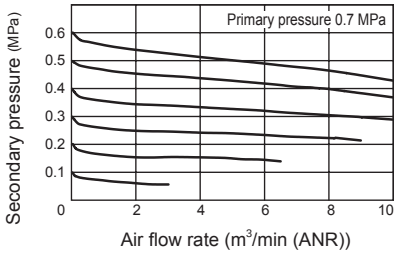

Set pressure to back pressure

● R2100/R3100

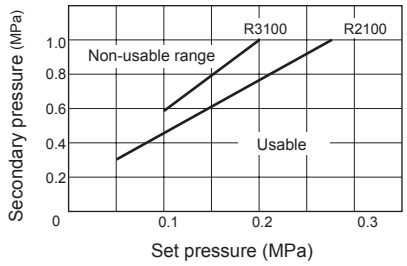

● R4100/R6100

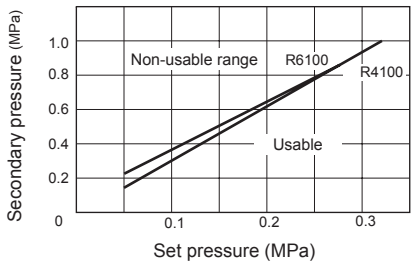

Note: The upper face of the graph is not usable and the lower side is usable.
Example: If R4100 is set to the set pressure 0.2 MPa and the secondary back pressure is 0.6 MPa and over, the secondary pressure will not be released to the primary side.

Pressure characteristics

● R2100

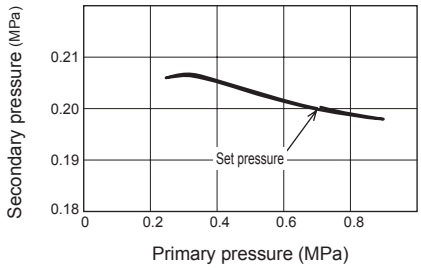

● R3100

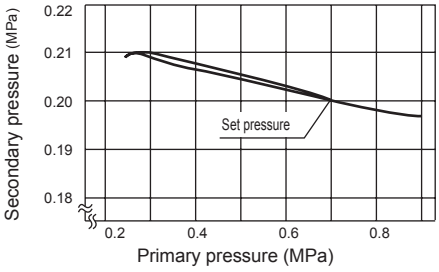

● R4100

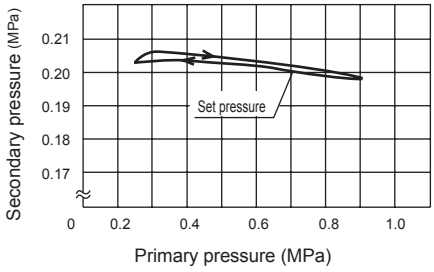

● R6100

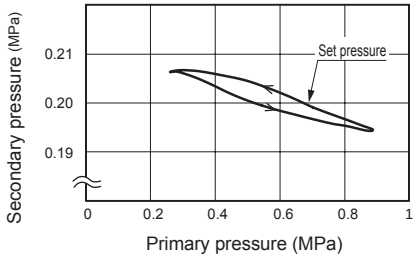

Dimensions

● R2100-P70/P74

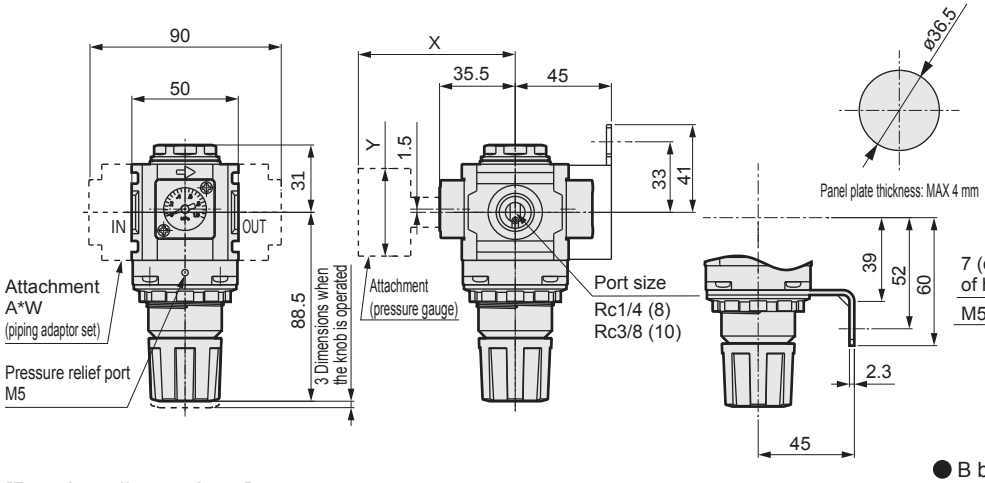

Table of optional dimensions with pressure gauge

Attached pressure gauge	X	Y
GX59	80	ø52
GY59	82.5	ø52

● Fitting
Part model No.: R4000-E1-P70
・Material: brass, nickel plate processing

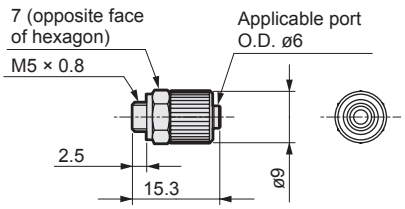

[Bracket dimensions]

● C bracket
Part model No.: B220-P70
・Material: steel, nickel plate processing

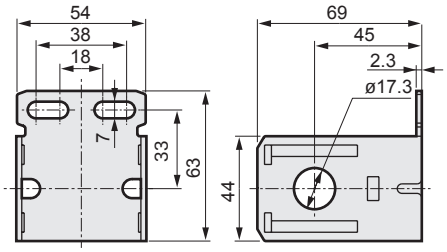

● L bracket
Part model No.: B230-P70
・Material: steel, nickel plate processing

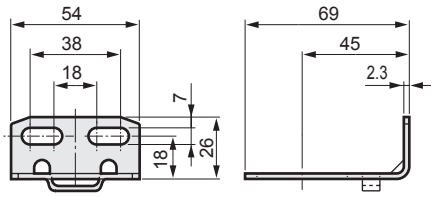

● B bracket
Part model No.: B240-P70
・Material: steel, nickel plate processing

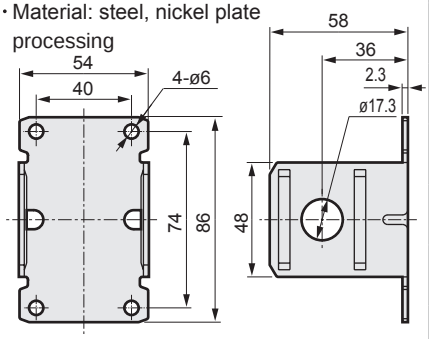

● R3100-P70/P74

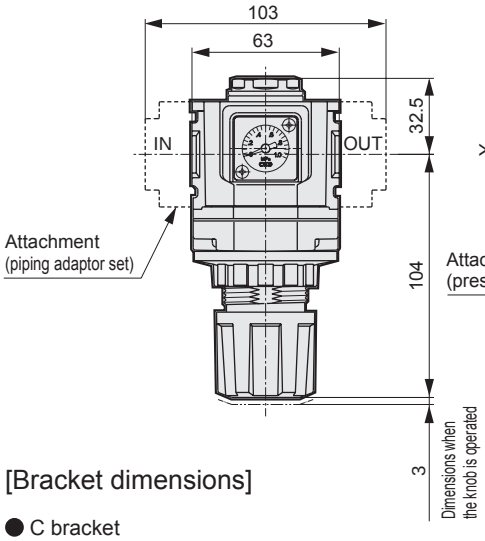

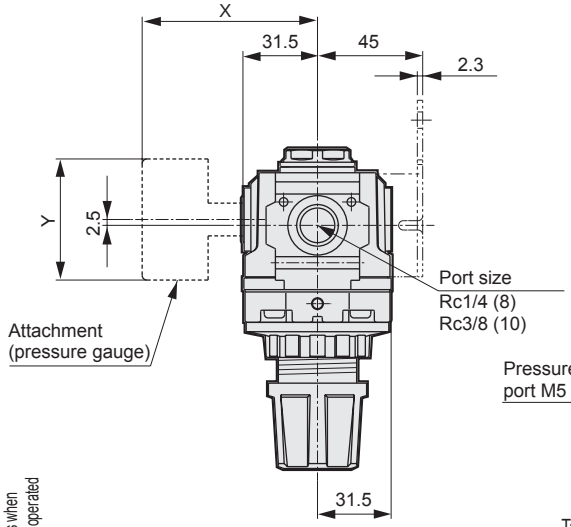

Panel cut dimension

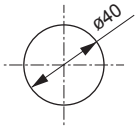

Panel plate thickness: MAX 6 mm

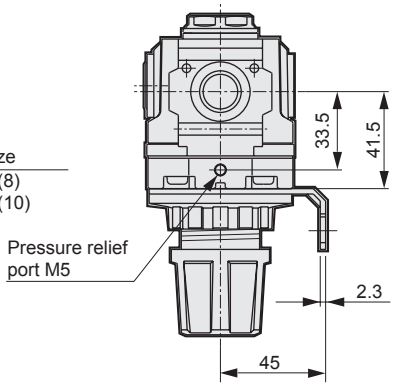

Table of optional dimensions with pressure gauge

Attached pressure gauge	X	Y
GX59	76.5	ø52
GY59	79	ø52

● Fitting
Part model No.: R4000-E1-P70
・Material: brass, nickel plate processing

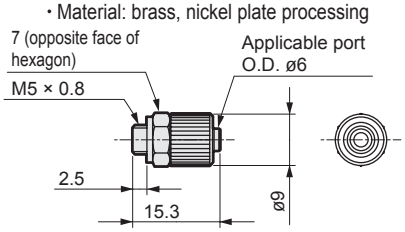

[Bracket dimensions]

● C bracket
Part model No.: B320-P70
・Material: steel, nickel plate processing

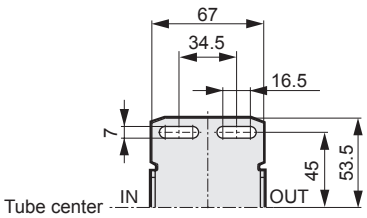

● L bracket
Part model No.: B330-P70
・Material: steel, nickel plate processing

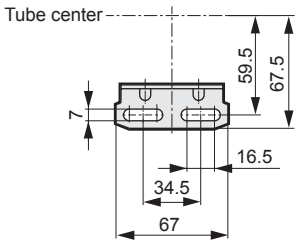

SCPD3
SCM
SSD2
MDC2
SMG
LCM
LCR
LCG
LCX
STM
STG
STR2
MRL2
GRC
Cylinder switch
MN3E MN4E
4GA/B
M4GA/B
MN4GA/B
F.R (module unit)
Clean F.R
Precision R
Press gauge Diff. press gauge
Electro-pneumatic R
Speed controller
Auxiliary valve
Fitting/ tube
Clean air unit
Pressure sensor
Flow rate sensor
Valve for air blow
Ending

Dimensions

● R4100-P70/P74

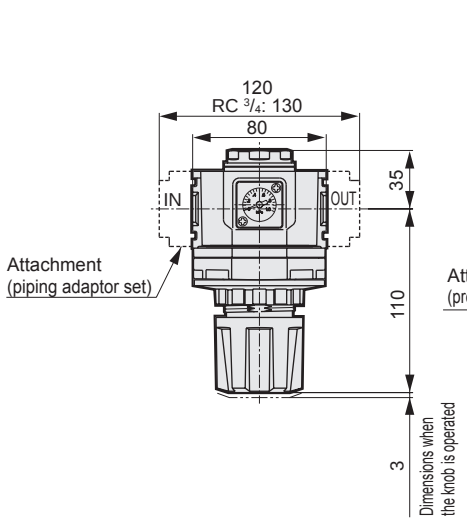

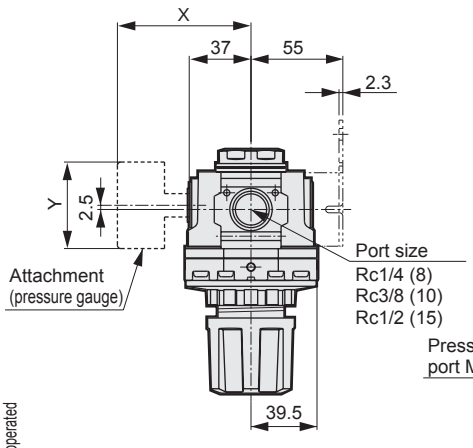

Panel cut dimension

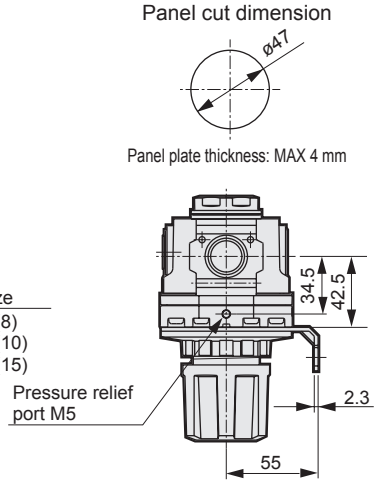

Table of optional dimensions with pressure gauge

Attached pressure gauge	X	Y
GX59	81.5	ø52
GY59	84	ø52

[Bracket dimensions]

● C bracket
Part model No.: B420-P70
・Material: steel, nickel plate processing

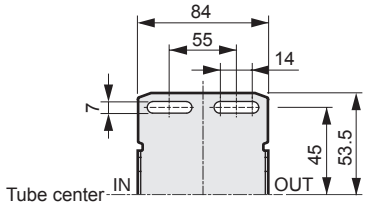

● L bracket
Part model No.: B430-P70
・Material: steel, nickel plate processing

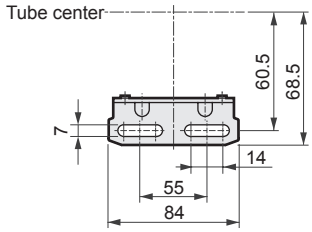

● Fitting
Part model No.: R4000-E1-P70
・Material: brass, nickel plate processing

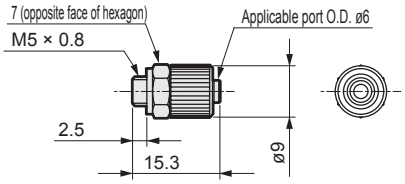

● R6100-P70/P74

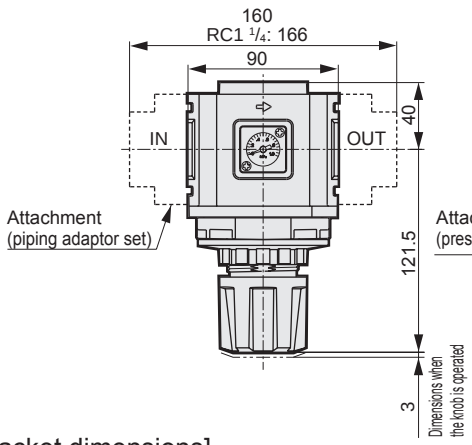

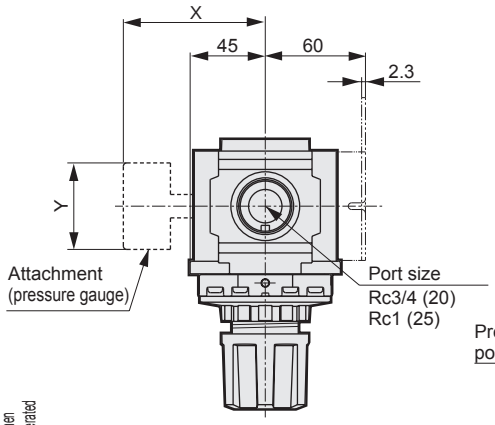

Panel cut dimension

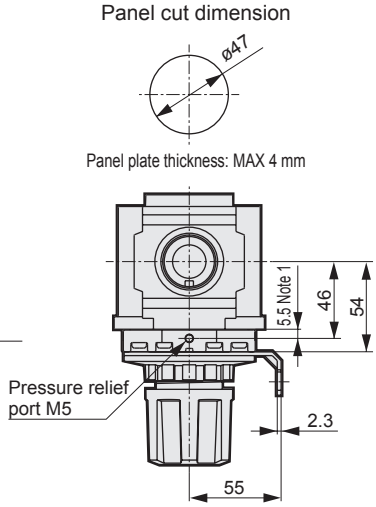

Note 1: Dimensions table is applied. Use fittings available for mounting.

[Bracket dimensions]

● C bracket
Part model No.: B620-P70
・Material: steel, nickel plate processing

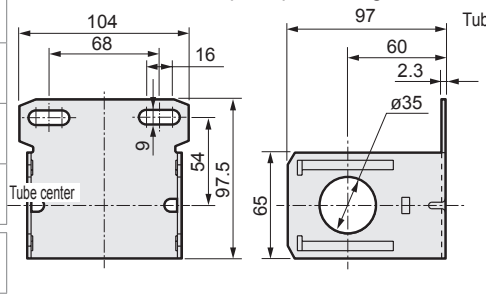

● L bracket
Part model No.: B430-P70
・Material: steel, nickel plate processing

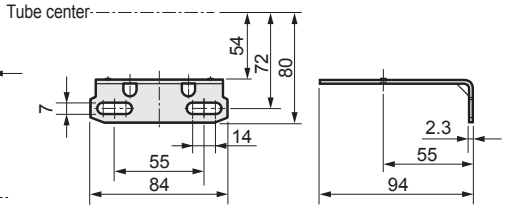

Table of optional dimensions with pressure gauge

Attached pressure gauge	X	Y
GX59	85	ø52
GY59	87.5	ø52

● Fitting
Part model No.: R4000-E1-P70
・Material: brass, nickel plate processing

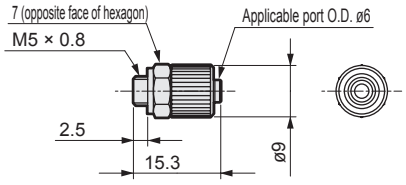

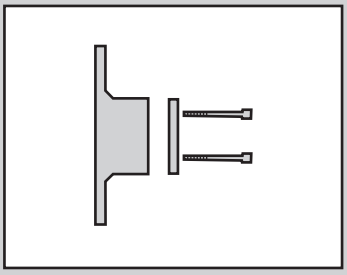

Auxiliary components

Bracket

B Series

Joiner

J Series

Structure/treatment and material restriction

	Structure/treatment	Model No.
P7 Series	Dust generation preventing	– P70

Dimensions and applications

T bracket set

● Model No.: B310-P70/B410-P70/B810-P70

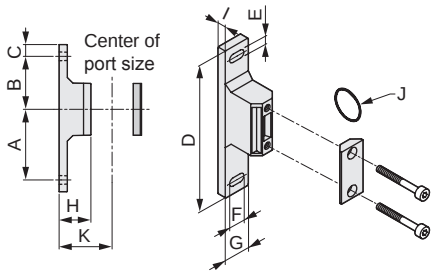

· Material: aluminum alloy die-cast coating processing

● Examples

Note: Select B410 when using the 3000 Series and 4000 Series combined.

Model No.	Applicable model	A	B	C	D	E	F	G	H	I	J	K	Weight (kg)
B310-P70	2000 Series 3000 Series	60	45	10	125	7	14	22	27	7	JISB2401-P21	45	0.086
B410-P70	4000 Series	60	45	10	125	7	14	22	37	7	JISB2401-P21	55	0.094
B810-P70	6000 Series 8000 Series	70	50	15	150	9	14	27	37	8	AS568-127	65	0.169

Joiner set

● Model No.: C4000-J400-P70/C8000-J800-P70

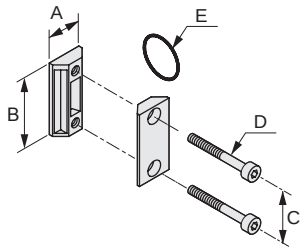

· Material: aluminum alloy die-cast coating processing

● Examples

Model No.	Applicable model	A	B	C	D	E	Weight (kg)	
C4000-J400-P70	2000 Series 3000 Series 4000 Series	21	44	32	M5	JIS B2401-P21	0.036	
C8000-J800-P70	6000 Series 8000 Series	26	65	50	M6	AS568-127	0.094	

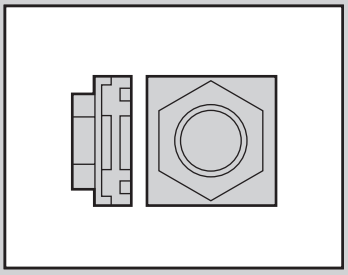

Auxiliary components
Piping adaptor

A400/A800 Series

Port size: Rc1/4 to Rc11/4

Structure/treatment and material restriction

	Structure/treatment	Model No.
P7 Series	Dust generation preventing	– P70

Dimensions and applications

Piping adaptor set

● Model No.: A400-*-P70
A800-*-P70

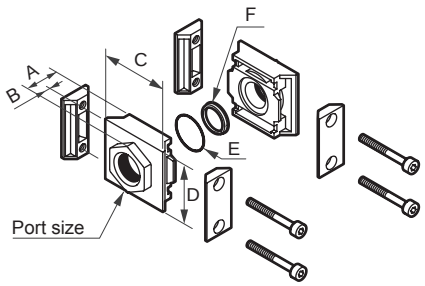

· Material: aluminum alloy die-cast coating processing

Model No.	Port size	Applicable model	A	B	C	D	E (O ring)	F (gasket)	Others
A400-8-P70	Rc1/4	2000 3000 Series / 4000 Series	20 (25) [34]	6 (11) [20]	50	45	JISB2401 P21 1	1	Values in ( ) are for Rc3/4 Values in [ ] are for Rc1.
A400-10-P70	Rc3/8								
A400-15-P70	Rc1/2								
A400-20-P70	Rc3/4								
A400-25-P70	Rc1								
A800-20-P70	Rc3/4	6000 Series	35 (38)	15 (18)	81	66	AS568-127 1	1	Values in ( ) are for Rc1 1/4.
A800-25-P70	Rc1								
A800-32-P70	Rc1 1/4								

Piping adaptor set

● Model No.: A400-*-B31-P70
A400-*-B41-P70
A800-*-B81-P70
(with T bracket set)

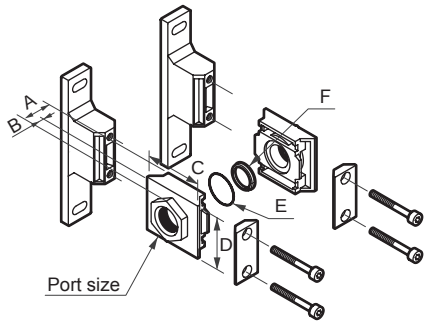

· Material: aluminum alloy die-cast coating processing

Model No.	Port size	Applicable model	A	B	C	D	E (O ring)	F (gasket)	Others
A400-8-B31-P70	Rc1/4	2000 Series 3000 Series	20	6	50	45	JISB2401 P21 1	1	
A400-10-B31-P70	Rc3/8								
A400-15-B31-P70	Rc1/2								
A400-8-B41-P70	Rc1/4	4000 Series	20 (25) [34]	6 (11) [20]	50	45	JISB2401 P21 1	1	Values in ( ) are for Rc3/4 Values in [ ] are for Rc1.
A400-10-B41-P70	Rc3/8								
A400-15-B41-P70	Rc1/2								
A400-20-B41-P70	Rc3/4								
A400-25-B41-P70	Rc1								
A800-20-B81-P70	Rc3/4	6000 Series	35 (38)	15 (18)	81	66	AS568-127 1	1	Values in ( ) are for Rc1 1/4.
A800-25-B81-P70	Rc1								
A800-32-B81-P70	Rc1 1/4								

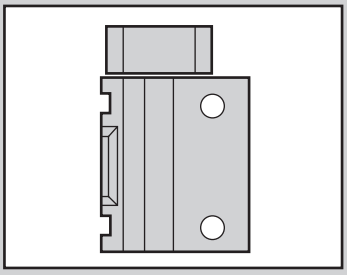

L piping adaptor

A401/A801 Series

Port size: Rc1/4 to Rc1

RoHS CAD

Structure/treatment and material restriction

	Structure/treatment	Model No.
P7 Series	Dust generation preventing	– P70

Specifications

Descriptions		A401 *1	A801
Working fluid		Compressed air	
Max. working pressure	MPa	1.0	
Proof pressure	MPa	1.5	
Port size	Rc	$^1/_4$, $^3/_8$, $^1/_2$	$^3/_4$, 1
Ambient temperature/liquid temperature	°C	5 to 50	
Weight	kg	0.13	0.4

*1: A401 can be connected to 2000 Series, 3000 Series, and 4000 Series.

How to order

A401 - 6 - B41 - P70

Ⓐ Model No.

Ⓑ Port size

Ⓒ T bracket

Ⓓ Clean room specifications

Code		Content	
Ⓐ Model No.			
A401		L piping adaptor	
A801		L piping adaptor	
Ⓑ Port size			
		A401	A801
8	Rc$^1/_4$	●	
10	Rc$^3/_8$	●	
15	Rc$^1/_2$	●	
20	Rc$^3/_4$		●
25	Rc1		●
Ⓒ T bracket *1			
B31	2000, 3000 Series	●	
B41	4000 Series	●	
B81	6000 Series		●
Ⓓ Clean room specifications			
		Structure	
P70		Dust generation preventing	

⚠ Precautions for model No. selection

*1: The joiner set (joiner/bolt/O-ring) and one gasket are enclosed as a standard.

*2: Consult CKD for top and bottom both sides piping.

L piping adaptor

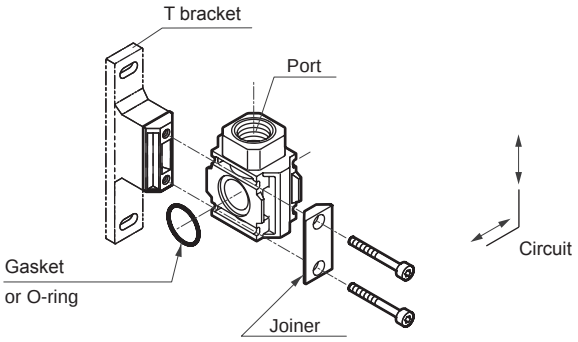

● Examples

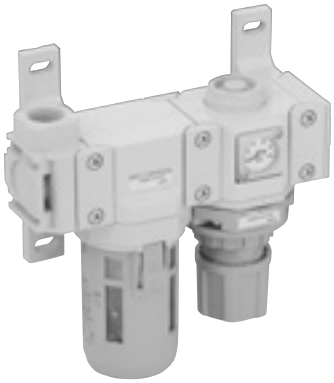

Note: Insert the O-ring when mounting on the primary side, and insert the gasket when mounting on the secondary side for the air flow.

Dimensions

● A401-*-P70

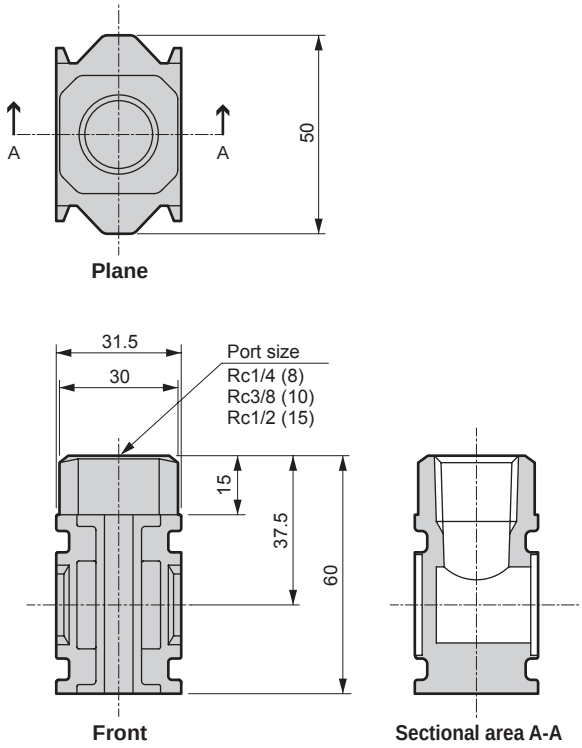

● A801-*-P70

· Material: aluminum alloy die-cast coating processing

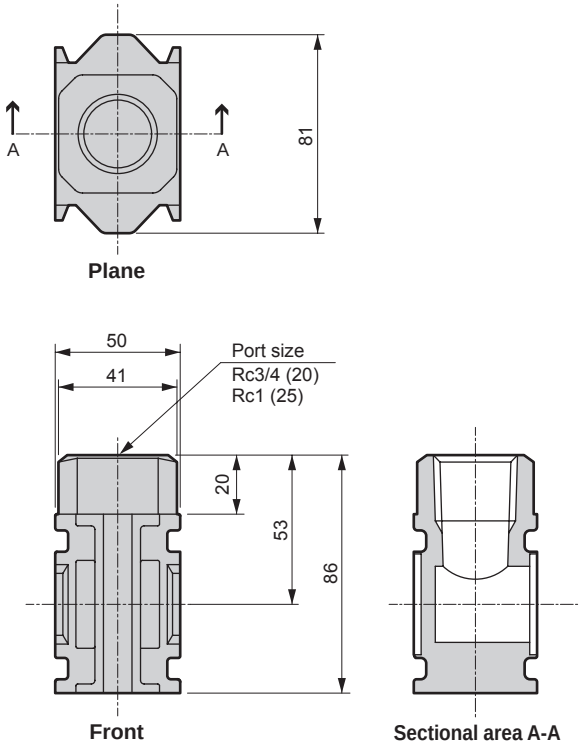

Pneumatic components (F.R. unit (modular design))

Safety Precautions

Always read this section before use.
Refer to 764, 765 for pneumatic components general precautions.

F.R. unit (modular design)

Design & selection

WARNING

■ This product is designed for industrial use. Do not use it in medical or human life related devices and circuits.

■ Plastic bowl of air filter, lens of pressure gauge
Material includes polycarbonate. Do not use in the atmosphere with synthetic oil, organic solvent, chemical materials, coolant, screw locking adhesive, liquid soap, hot water, etc., or possible exposure to these substances.
Refer to page 810 for details for chemical resistance of plastic bowl.

■ Install a safety device where an output pressure exceeding the regulator's set pressure value could result in damage or faulty operation of secondary side devices.

■ The regulator cannot process residual pressure (removing secondary pressure) when primary pressure is released. Use a regulator with a check valve when residual pressure must be processed.

■ If the regulator cannot be used with the secondary side sealed circuit or balance circuit, contact CKD.

■ Piping, load torque
Make sure that no piping load or torque is applied to the body or pipes.

	2000 Series	3000/4000 Series	6000 Series
Max. torque N·m	30	50	100

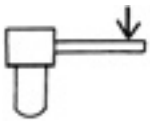

Use within the specified torque, even when using the piping adaptor.

■ O-ring grooves for module connection are provided on the OUT face of each product. Select piping that can be sealed with the O-ring groove diameter or less.

Series	2000 Series	3000 Series	4000 Series	6000 Series
groove diameter	ø25.4	ø25.4	ø25.4	ø41.2

CAUTION

■ Large drainage
Install the air dryer and drain separator before the air filter.
If there is a large drainage from the compressor, hot and highly humid air could shorten the device's life or result in corrosion.

■ Dry air
Rubber parts for the regulator could deteriorate quickly, so use of a fluoro rubber valve assembly is recommended. Contact CKD when required.

■ Compressor circuit of water lubrication method
Take measures to prevent chlorine-based substances from entering the compressed air.

■ Set secondary pressure of the regulator to 85% or less on the primary side, or the pressure drop could increase.

■ Contact CKD when auto drains are required.

■ When using regulators in parallel as shown below, do not use the OUT side as a closed circuit. If a closed circuit is required, set a check valve at the regulator's OUT side.

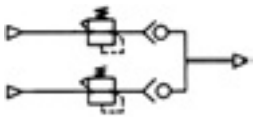

■ When using this unit for a large flow, etc., install a pressure gauge as shown below so that secondary pressure is measured accurately.

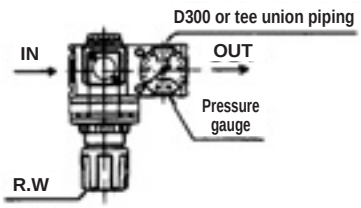

Mounting / Installation / adjustment

⚠ CAUTION

■ Open the package in a clean room.

● The products are wrapped in an antistatic sheet before packaged in a box. If you install the product in a clean room, we recommend you to take it out of the box outside the clean room before you bring it in and to open the package in the clean room.

■ Avoid using the product in an area exposed to direct sunlight.

■ Flush and wash pipes to be used.

Dirt or foreign materials in piping will lower product performance.

■ Check that foreign materials do not enter when tightening pipes or fittings.

Make sure that no piping screw chips or sealant material enters the pipes when connecting the pipes and fittings. Dirt or foreign matters in piping will lower product performance.

■ Set the regulator pressure to increase. After setting the pressure, lock the handle. Check primary pressure carefully before setting the pressure.

■ Check the arrow indicating the air inlet before connecting. If connected reversely, malfunction may be caused.

■ Air filter should be set with its case mounted face down and vertically. This can help when checking the drain works correctly without a failure of draining and dropping.

■ Pipe auto-drain piping as follows.

Make sure that excessive torque is not applied on the body and pipe when piping.

	2000 Series	3000/4000 Series	6000 Series
Max. torque N·m	15	30	70

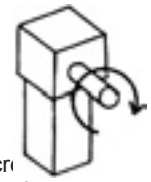

■ Regulator

● Lightly tighten (0.6 N·m or less) mounting scr embedded pressure gauge G401 and gauge plug.

● When installing a general screw-in pressure gauge, tighten with a torque of 10 to 15 N·m or less.

● Do not move or swing the product holding the adjustment knob on the regulator.

■ Drain piping for polycarbonate bowl

・Fix the hexagon face of the cock before screwing the fitting, etc., into the Rc1/8 female screw.

・Do not apply too much torque or lateral load on drain discharge.

■ Piping the unit with detection port

F6000-*-Q/M6000-*-Q

A pressure detection port is available as an option for F6000 and M6000.

The life of the filter element or oil mist filter mantle assembly is visually checked by assembling the differential pressure gauge GA400-8-P02-P90 into the pressure detection port.

For F6000 and M6000, when selecting Options Q and X1 simultaneously and installing the differential pressure gauge GA400, use the piping material to raise the level of the gauge so as not to interfere each other.

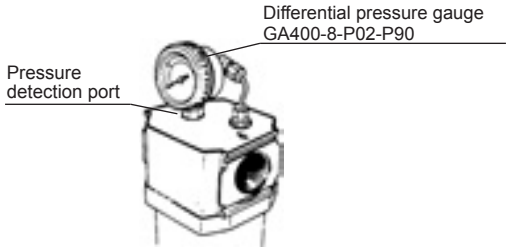

To install correctly, confirm the positions of the differential pressure gage mounting port on the high/low pressure sides.

■ Do not apply a pressure exceeding a full scale of the pressure gage. (Pay special attention when using a pressure gage with a full scale of 0.2 or 0.4 MPa.)

■ Panel mount of regulator

Before mounting the panel and installing the L bracket, the knob must be removed.

(For 2000 series, it is not necessary to remove the knob.)

To remove the knob, turn it about three times in the H direction and then turn the nut in the way like jacking-up.

When turning the knob in the L direction from the setting pressure 0, the stopper will be activated to prohibit the knob from turning.

Applying a further torque in the L direction will make the knob to be locked and become inoperable.

To avoid locking the knob, make sure to turn it three times in the H direction and then turn the nut.

At this time, do not turn the knob together.

Note that the knob could pop up vigorously when jacking up the knob with the nut.

Then, insert the cover part into the panel or the L bracket and fix it with the nut.

Lastly, insert the knob and tap it in.

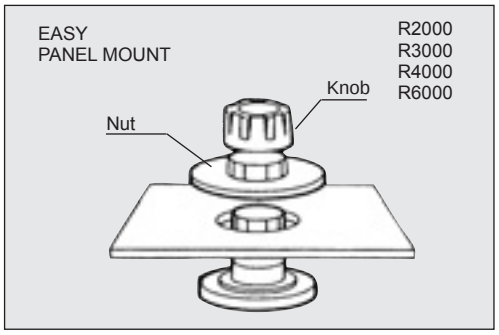

Note: Before mounting a knob, a nut should be set.
(For R2000, the nut can be detached alone without dismounting the knob.)

During use & maintenance

⚠ WARNING

- Check the air filter plastic bowl regularly for cracks, damage, and other deterioration.
  Replace the product when cracks, damage, and other deterioration is found.

- Drain so that air filter drainage does not accumulate exceeding the upper limit.
  Components could malfunction if drainage flows into the secondary side.

⚠ CAUTION

- Do not disassemble and modify the products.

- Read instructions and precautions enclosed with the product before use or maintenance.

- Pull the pressure adjustment knob and release the lock before setting the regulator pressure. The regulator could be damaged if the pressure is set without unlock.

- Submicron 0.3 μm element
  When the pressure drops to 0.07 MPa, replace the filter with a new one.

- Oil mist filter
  The mantle (element) life ends when pressure drops to 0.1 MPa. Replace the mantle when life is reached.

- Turning the knob from 0 of the setting pressure in the L direction actuates the stopper to prevent the knob from turning around.
  Note that applying a torque in the L direction forcedly will make the knob locked and inoperable.

- Pulsation may occur depending on the working conditions or piping conditions. It is recommended to change the use or piping conditions such as lowering primary pressure if pulsation occurs.

- If the regulator is released of the primary pressure and left for a long time, the setting pressure should be set back to zero. If not doing so, valve adhesion may occur to lead an external leakage.

- The set pressure changes from the initial set value based on the working environment and conditions, as well as aging of part materials.
  Periodically check the pressure, and should there be a change, reset the pressure accordingly.

- On the regulator or the filter regulator with a pressure applied, releasing the primary pressure and then reapplying a pressure may rarely cause a relief leakage. When this happens, close the supply air pressure valve and evacuate the pressure thoroughly and then, after turning the pressure control knob in the pressure-decreasing direction until it stops, apply a primary pressure. Afterwards, turn the control knob in the pressure-increasing direction to readjust the secondary pressure.

Chemical resistance of plastic

⚠ WARNING

- The chemical resistance of plastic parts is shown below.
- Avoid using products in an atmosphere where chemicals are contained in compressed air, the atmosphere, or where they could adhere to parts.
- Use in the above state could lead to bowl damage and accidents.
- Avoid using these types of chemicals or in an atmosphere containing these chemicals.
- A metal bowl is used if these chemicals must be used.

Chemical resistance of plastic bowl/body

Use a metal bowl in an atmosphere containing the following chemicals.
Check whether the testing solutions, sealants and adhesives contain the following chemicals.

Chemicals	Category of chemicals	Main products of chemicals	General applications	Polycarbonate bowl	Nylon bowl	Nylon body
Inorganic chemicals	Acid	Hydrochloric acid, sulphuric acid, hydrofluoric acid, phosphoric acid, chromic acid, etc.	Acid washing of metals, acidic degreasing solution, film treatment liquid, etc.	×	×	×
	Alkaline	Alkali matters such as caustic soda, caustic potash, calcium hydroxide, aqueous ammonia, sodium carbonate	Alkaline degreasing solution for metals Soluble cutting oil, leakage detection agent	×	○	○
	Inorganic salt	Sodium sulfide, sodium nitrate, potassium bichromate, sulfate of soda, etc.		×	○	○
Organic chemicals	Aromatic hydrocarbon	Benzene, toluene, xylene, ethyl benzene, styrene, etc.	Contained in paint thinner (benzene, toluene, and xylene)	×	×	×
	Chlorine aliphatic hydrocarbon	Methyl chloride, ethylene chloride, methylene chloride, acetylene chloride, chloroform, trichlene, perchlene, carbon tetrachloride	Organic solvent-based washing solution for metals (trichlene, tetrachloroethylene, carbon tetrachloride)	×	○	○
	Chlorinated aromatic hydrocarbon	Chlorobenzene, dichlorobenzene, benzene hexachloride (B/H/C), etc.	Agricultural chemicals	×	○	○
	Petroleum components	Solvent naphtha, gasoline, kerosene		×	○	○
	Alcohol	Methyl alcohol, ethyl alcohol, cyclohexanol, benzyl alcohol	Used as anti-freezing agent, leakage detection agent	×	×	×
	Phenol	Carbolic acid, cresol, naphthol, etc.	Disinfectant solution	×	×	×
	Ether	Methyl ether, methyl ether ethyl, ethyl ether	Additive of brake oil	×	○	○
	Ketone	Acetone, methyl ethyl ketone, cyclohexanone, acetophenone, etc.		×	×	×
	Carboxylic acid	Formic acid, acetic acid, butyl acid, acrylic acid, oxalic acid, phthalic acid, etc.	Dyes/oxalic acid for aluminum processing, phthalic acid for paint base and leak-detection agents	×	×	×
	Ester	Dimethyl phthalate (DMP), diethyl phthalate (DEP), dibutyl phthalate (DBP), dioctyl phthalate (DOP)	Lubricant, synthetic coolant, rust-prevention agent additive plasticizer for synthetic resin.	×	○	○
	Oxyacid	Glycol acid, lactic acid, malic acid, citric acid, tartaric acid		×	×	×
	Nitro compound	Nitro methane, nitro ethane, nitro ethylene, nitro benzene, etc.		×	○	○
	Amine	Methylamine, diemethylamine, ethylamine, aniline, acetoacetanilide, etc.	Additive of brake oil	×	×	×
	Nitrile	Acetonitrile, acrylonitrile, benznitrile, acetoylidyne nitrile, etc.	Raw material for nitrile rubber benzonitrile, nitrile, etc.	×	○	○

○: Available, ×: Not available (plastic will be damaged.)

Clean filter/regulator

Refining and pressure adjusting components

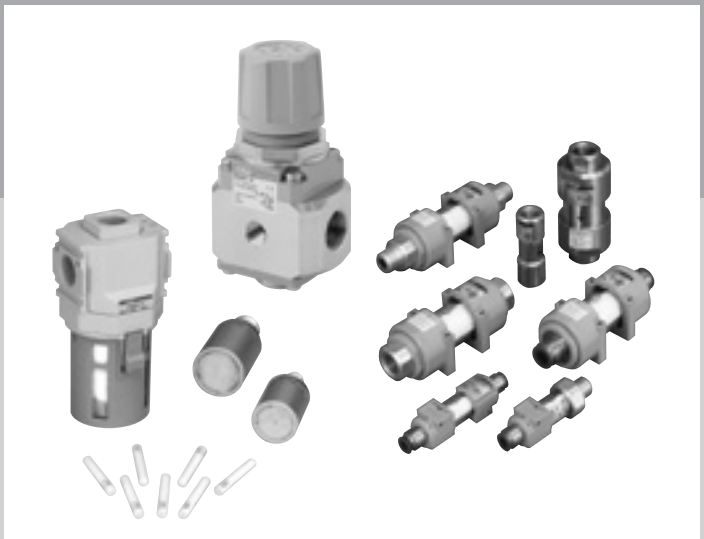

CONTENTS

Clean filter

- **Inline clean filter FCS Series** 812
- **Clean exhaust filter FAC Series** 822

Clean regulator

- **Clean regulator RC2000** 832
- **Regulator (2619)** 836
- ⚠ Safety precautions 840

Our original hollow fiber membrane provides the innovative filter performance.

Long service life.

Inline clean filter FCS500/1000 Series with hollow fiber membrane filter element provides high performance in all aspects including filtration performance, flow rate, pressure loss, service life and mounting space.

FCS500 Series

■ Flow rate/50, 80 (ℓ/min)

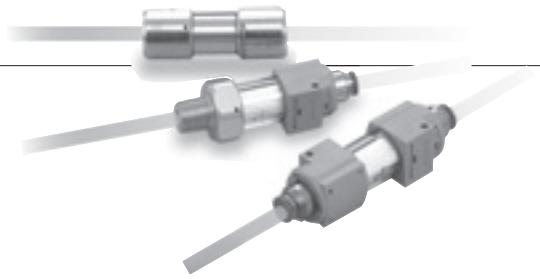

FCS1000 Series

■ Flow rate/300 to 400 (ℓ/min)

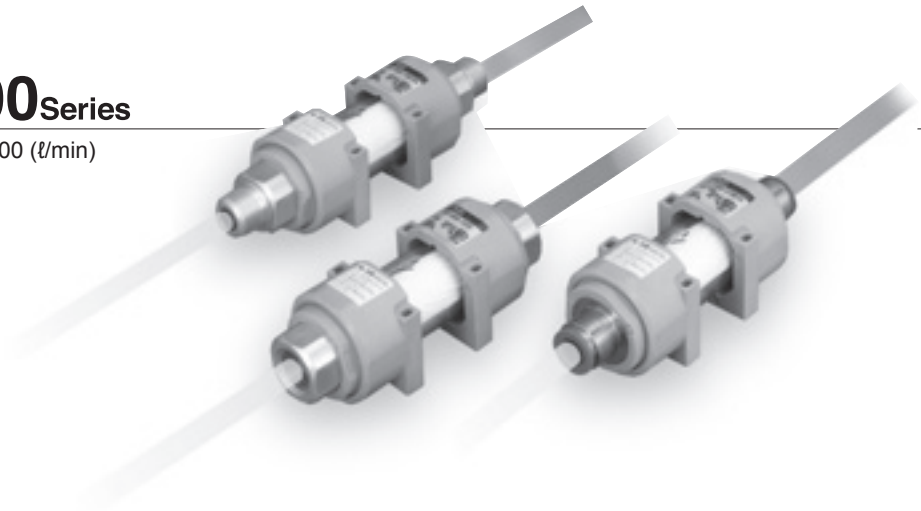

■ Example of applicable circuit

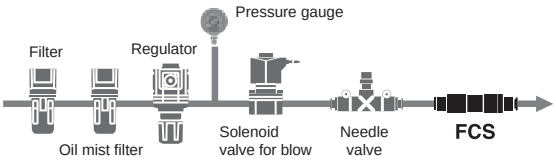

Applications

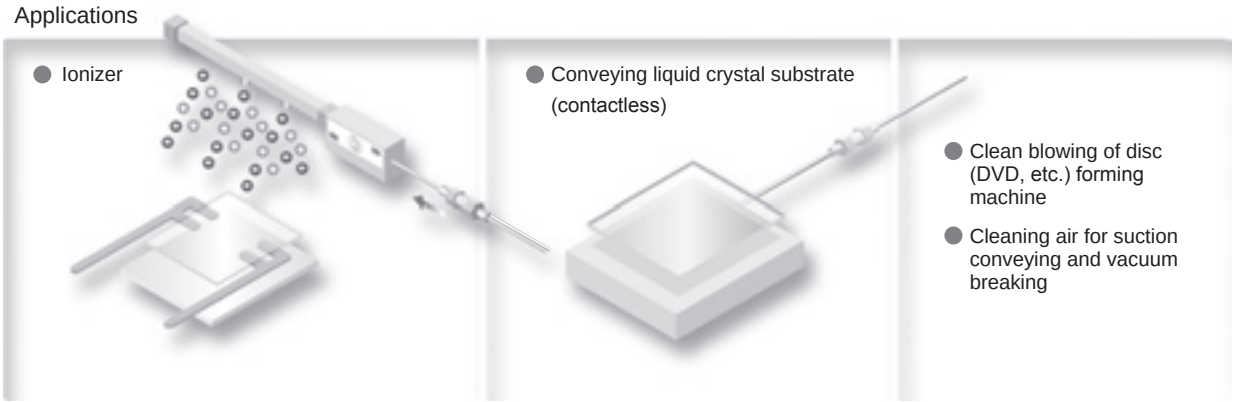

0.01 μm high precision filtration, 99.99% removal efficiency

Hollow fiber membrane element has enabled 0.01 μm high precision filtration and 99.99% removal efficiency.

Long service life

Considerably longer service life. Approximately five times longer than the flat membrane.

■ Dust rate - pressure drop graph

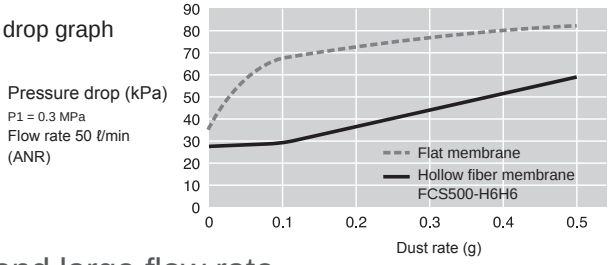

Compact, light and large flow rate

The filtration area is 3 to 10 times larger and enables larger flow rate and less pressure loss than the flat membrane with the same capacity. If the flow rate is the same, the hollow fiber membrane can be more compact and lighter.

Oil-prohibited specifications

Parts are all degreased and cleaned. The manufacturing processes from assembling to packaging are performed in clean room.

Easy maintenance

As the resin case is transparent, it is easy to visually check for dirt in the element.

Wide range of choices

Two kinds of flow rate (500 and 1000 Series), resin and stainless steel materials, and the mounting options of push-in fitting, male thread piping and female thread piping are available.

Enlarged view of hollow fiber

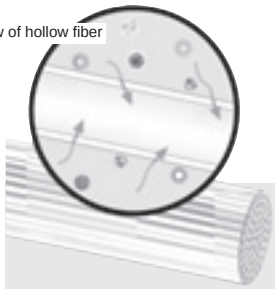

Structure of hollow fiber membrane

Hollow fiber membrane is tubular porous membrane of 3 mm or less diameter with myriad tiny holes on its wall. Particles contained in fluid are completely removed while they are passing through it. Our product uses a filter material of hollow fiber module made by bundling more than several tens of hollow fiber membranes. The filter has an extremely large membrane area enabling a large flow rate per unit volume.

■ Hollow string membrane

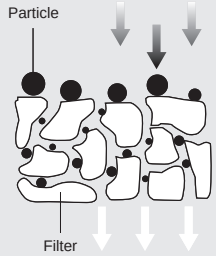

■ Flat membrane

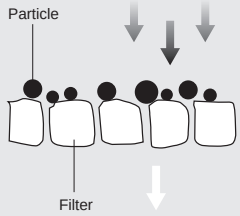

Inline clean filter

FCS Series Variation

▼ Port size

	▼ Body material	▼ Flow rate	Push-in ø 4	ø 6	ø 8	ø 10	ø 12	Male thread R1/8	R1/4	R3/8	Female thread R1/8	R1/4	R3/8
FCS500	Resin	50, 80 (ℓ/min)	●	●	●			●	●				
	SUS										●	●	
FCS1000	Resin	300 to 400 (ℓ/min)			●	●	●		●	●		●	●
	SUS											●	●

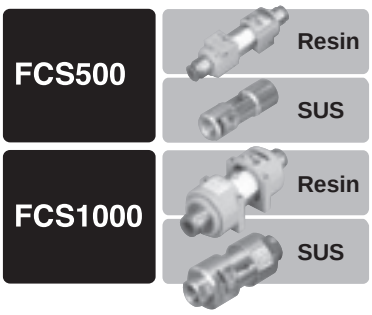

Read Safety Precautions to ensure correct, safe product use.

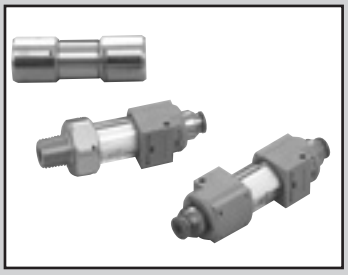

Inline clean filter

FCS500 Series

● Port size: Rc1/8, Rc1/4, R1/8, R1/4
push-in fitting ø4/ø6/ø8

JIS symbol

RoHS CAD

Specifications

Descriptions		Standard element resin	Male thread piping	P9 element stainless steel	
		FCS500- (*1) (*2)	FCS500- (*1) (*2)	FCS500-66-P90 FCS500-66-P94	FCS500-88-P90 FCS500-88-P94
Working fluid		Compressed air, N_2			
IN side port size (*1)		Select from ø4, ø6 and ø8	Select from ø4, ø6, ø8, R1/8 and R1/4	Rc1/8	Rc1/4
OUT side port size (*2)				Rc1/8	Rc1/4
Proof pressure MPa		1.5	1.5	2.25[air], 1.5[N2]	
Differential pressure proof MPa		0.5 (0.2 at 45 to 50 °C) *3	0.5 (0.2 at 45 to 50 °C) *3	0.5	
Working pressure MPa		-0.095 to 0.99 *2 *4	-0.095 to 0.99 *2 *4	-0.095 to 1.5 (air), -0.095 to 0.99 (N_2) *5	
Ambient temperature/fluid temperature °C		5 to 50	5 to 50	5 to 45	
Filtration rating µm		0.01 (removal efficiency 99.99%)			
Processing flow rate ℓ/min (ANR) *1		50 (H8H8 type: 80)	50 (H88A and 8AH8 types: 80)	50	80
Weight g		45	45	100	100
Material	Body	Polyamide	Polyamide, aluminum (alumite treatment)	Stainless steel	
	Case	Transparent polyamide	Transparent polyamide	Stainless steel	
	Element	Polypropylene + urethane			
Assembling/inspection/packaging		Integrated production in cleanroom			
Cleaning		Degreasing and cleaning			

*1: Initial flow rate at primary pressure 0.7 MPa and pressure drop 0.03 MPa.
*2: Max. working pressure varies with working temperature. Check graphs showing the relationship.
*3: 0.5 [0.2 MPa at 45 to 50 °C]
*4: -0.095 to 0.99
*5: -0.095 to 1.5 [air], -0.095 to 0.99 [N2]

Relationship of working temperature and maximum working pressure for resin elements and male piping

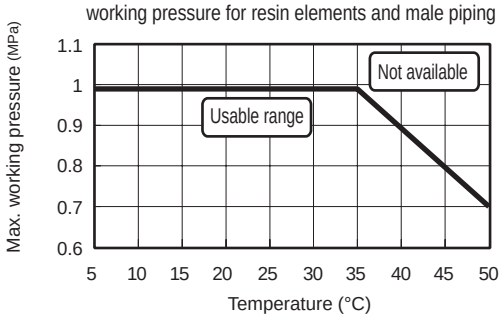

Flow characteristics

● FCS500-H8H8 ● FCS500-H88A ● FCS500-8AH8 ● FCS500-H4H4 ● FCS500-H6H6 ● FCS500-H46A
● FCS500-88-P90/P94

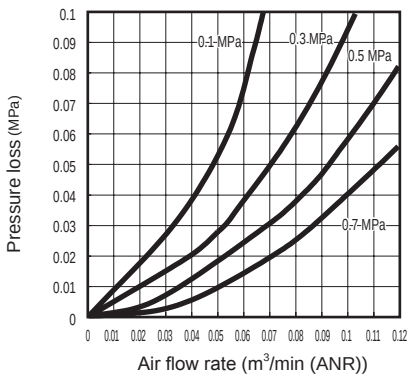

● FCS500-66-P90/P94 (products including ø4 and ø6 fittings, and R1/8 and Rc1/8 connections)

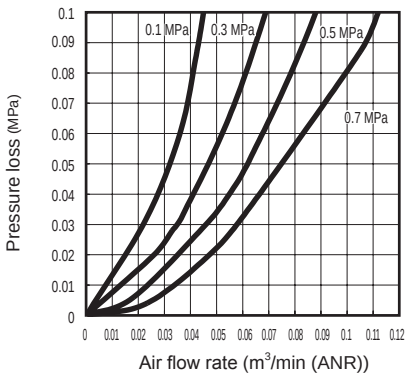

How to order

● Resin

FCS500 — H4 H4

Model No.
(clean room specifications)
(oil-prohibited specifications)

Ⓐ IN side port size

Ⓑ OUT side port size

Ⓐ IN side port size	
H4	ø4
H6	ø6
H8	ø8
6A	R1/8
8A	R1/4

Ⓑ OUT side port size	
H4	ø4
H6	ø6
H8	ø8
6A	R1/8
8A	R1/4

Note 1: Two screws (M2.5 × 25) and two flat washers are included with the product.
(These are not included when 6A or 8A is selected for IN or OUT side connection port size.)
Note 2: When using male thread piping for both IN and OUT sides, confirm that piping does not apply a lateral load or bending torque during mounting.

● Stainless steel

FCS500 — 88 – B – P90

Model No.
(clean room specifications)
(oil-prohibited specifications)

Ⓐ Port size

Ⓑ Attached

Ⓒ Clean room specifications

Ⓐ Port size	
66	IN side/OUT side port size Rc1/8
88	IN side/OUT side port size Rc1/4

Ⓑ Attached	
Blank	None
B	Bracket, set screw

Ⓒ Clean room specifications		
	Structure/treatment	Material restriction
P90	Stainless steel material used, oil prohibited	-
P94	Stainless steel material used, oil prohibited	Copper-based/silicon-based/halogen-based materials (fluorine, chlorine, bromine) are prohibited

Note: " P94 " is custom order.

Weight: 6 g

● Bracket model No.

FCS500-B

(Bracket × 1, set screw (M4 × 6) × 2)

SCPD3
SCM
SSD2
MDC2
SMG
LCM
LCR
LCG
LCX
STM
STG
STR2
MRL2
GRC
Cylinder switch
MN3E MN4E
4GA/B
M4GA/B
MN4GA/B
F.R (module unit)
Clean F.R
Precision R
Press gauge Diff. press gauge
Electro-pneumatic R
Speed controller
Auxiliary valve
Fitting/ tube
Clean air unit
Pressure sensor
Flow rate sensor
Valve for air blow
Ending

Dimensions

● Resin
Port size
IN side (cartridge fitting) - OUT side (cartridge fitting)

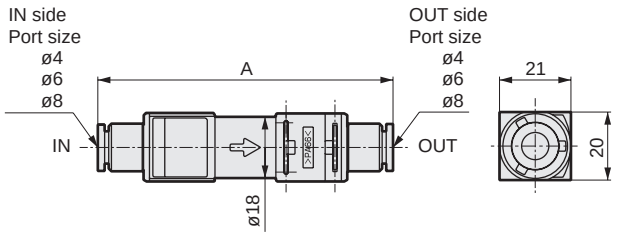

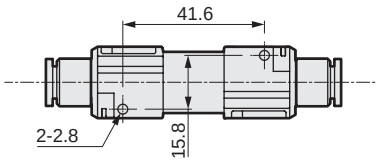

● Male thread piping
Port size
Cartridge fitting - male thread

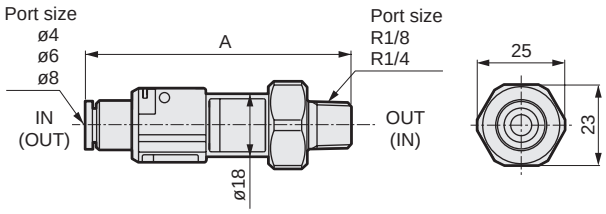

Port size
Male thread - male thread

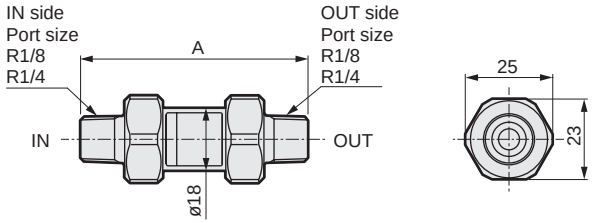

Model No.	FCS500 (standard element, resin/male thread piping)													
Port size model No.	H4H4	H4H6 H6H4	H4H8 H8H4	H46A 6AH4	H48A H86A 6AH8 8AH4	6A6A	6A8A 8A6A	H6H6	H6H8 H8H6	H66A 6AH6	H68A 8AH6	8A8A	8AH8 H88A	H8H8
Dimension A	80.5	83	84	69.5	73	58.5	62	85	86	72	75	65	76	87

● Stainless steel

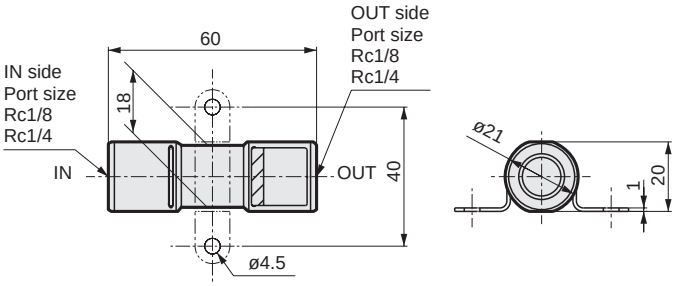

MEMO

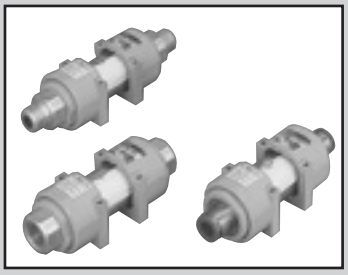

Inline clean filter

FCS1000 Series

● Port size: Rc1/4, Rc3/8, R1/4, R3/8
Push-in fitting ø8/ø10/ø12

JIS symbol

RoHS CAD

Specifications

Descriptions		Resin	Stainless steel (custom order)
		FCS1000- (*1) (*2)	FCS1000- (*1) (*2)-P90 FCS1000- (*1) (*2)-P94
Working fluid		Compressed air, N_2	
IN side port size (*1)		Select from push-in fittings ø8, ø10, ø12, R1/4, R3/8, Rc1/4 and Rc3/8	Select from Rc1/4 and Rc3/8
OUT side port size (*2)			
Proof pressure MPa		1.5	2.25 (compressed air), 1.5 (N_2)
Differential pressure proof MPa		0.5	
Working pressure MPa		-0.095 to 0.99	-0.095 to 1.5 (compressed air), -0.095 to 0.99 (N_2) *2
Ambient temperature/fluid temperature °C		5 to 45	
Filtration rating μm		0.01 (removal efficiency 99.99%)	
Processing flow rate ℓ/min (ANR)		300 to 400 *1	
Material	Body	Polyamide	Stainless steel
	Case	Transparent polyamide	Stainless steel
	Element	Polypropylene + urethane	
Assembling/inspection/packaging		Integrated production in cleanroom	
Cleaning		Degreasing and cleaning	

*1: Initial flow rate at primary pressure 0.7 MPa and pressure drop 0.03 MPa. (Depending on load.)

*2: -0.095 to 1.5 [air], -0.095 to 0.99 [N2]

Flow characteristics

● FCS1000-H8H8
● FCS1000-8A8A

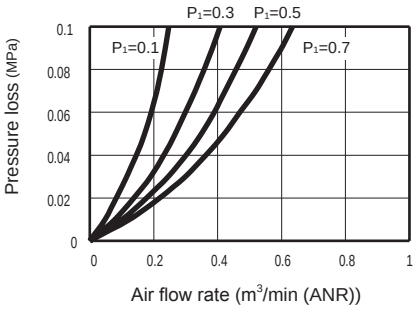

● FCS1000-H10H10
● FCS1000-10A10A
● FCS1000-88
● FCS1000-88-P90/P94

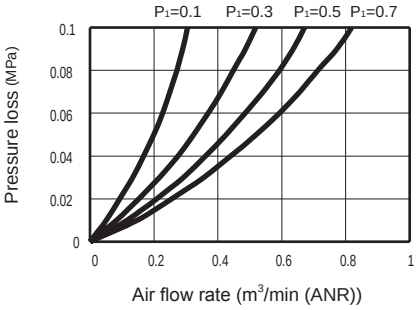

● FCS1000-H12H12
● FCS1000-1010
● FCS1000-1010-P90/P94

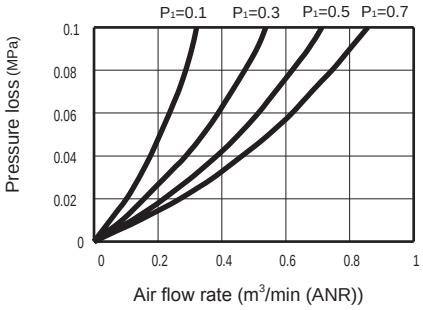

How to order

● Resin

FCS1000 — H8 H8

Model No.
(clean room specifications)
(oil-prohibited specifications)

Ⓐ IN side port size

Ⓑ OUT side port size

Ⓐ IN side port size	
H8	ø8
H10	ø10
H12	ø12
8A	R1/4
10A	R3/8
8	Rc1/4
10	Rc3/8

Ⓑ OUT side port size	
H8	ø8
H10	ø10
H12	ø12
8A	R1/4
10A	R3/8
8	Rc1/4
10	Rc3/8

Note 1: Two set screws (M3 × 40), two plain washers, and two spring washers are included with the product.

● Stainless steel (custom order)

FCS1000 — 8 8 – P90

Model No.
(clean room specifications)
(oil-prohibited specifications)

Ⓐ IN side port size

Ⓑ OUT side port size

Ⓒ Clean room specifications

Ⓐ IN side port size	
8	Rc1/4
10	Rc3/8

Ⓑ OUT side port size	
8	Rc1/4
10	Rc3/8

Ⓒ Clean room specifications		
	Structure/treatment	Material restriction
P90	Stainless steel material used, oil prohibited	-
P94	Stainless steel material used, oil prohibited	Copper-based/silicon-based/halogen-based materials (fluorine, chlorine, bromine) are prohibited

● Discrete model for replacement element (1 element, 2 O-rings)

- For resin : **FCS1000-E**
- Stainless steel

For P90 : **FCS1000-E-P90** (custom order)
For P94 : **FCS1000-E-P94** (custom order)

SCPD3
SCM
SSD2
MDC2
SMG
LCM
LCR
LCG
LCX
STM
STG
STR2
MRL2
GRC
Cylinder switch
MN3E MN4E
4GA/B
M4GA/B
MN4GA/B
F.R (module unit)
Clean F.R
Precision R
Press gauge Diff. press gauge
Electro-pneumatic R
Speed controller
Auxiliary valve
Fitting/ tube
Clean air unit
Pressure sensor
Flow rate sensor
Valve for air blow
Ending

Dimensions

● Resin

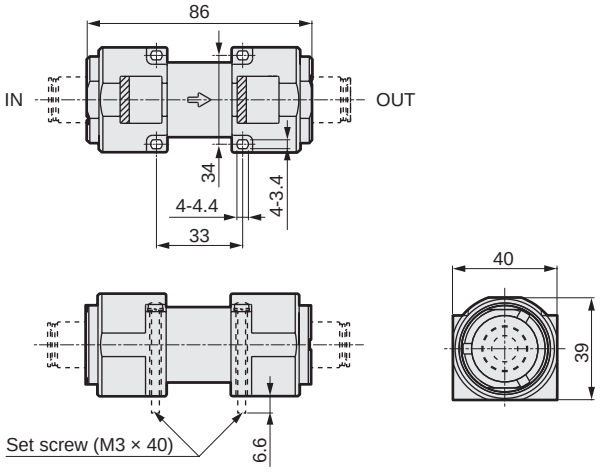

・Push-in fitting (ø8, ø10, ø12)

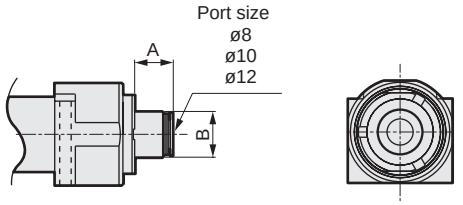

・Rc screw (Rc1/4, Rc3/8)

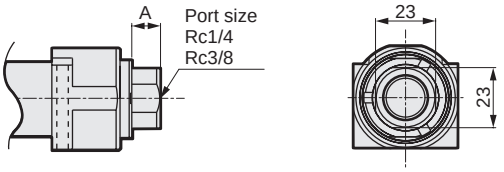

・R thread (R1/4, R3/8)

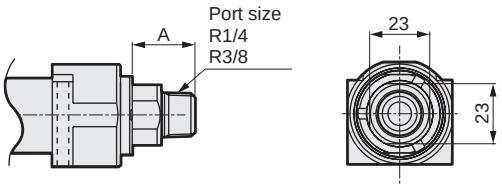

Connection model No.	Port size	A	B
H8	ø8 push-in fitting	12	ø17.5
H10	ø10 push-in fitting	14.5	ø17.5
H12	ø12 push-in fitting	16	ø19.5
8A	R1/4	24	-
10A	R3/8	24	-
8	Rc1/4	11	-
10	Rc3/8	11	-

● Stainless steel

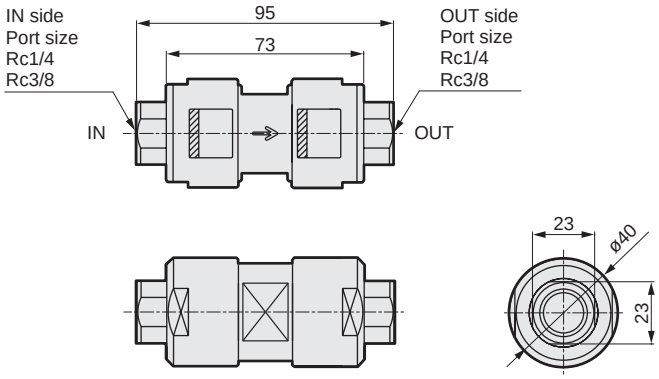

Applications and example of applicable circuit

● Application 1: Use as a precision filtration blow filter to filter out air and N_2 gas and provide clean air.

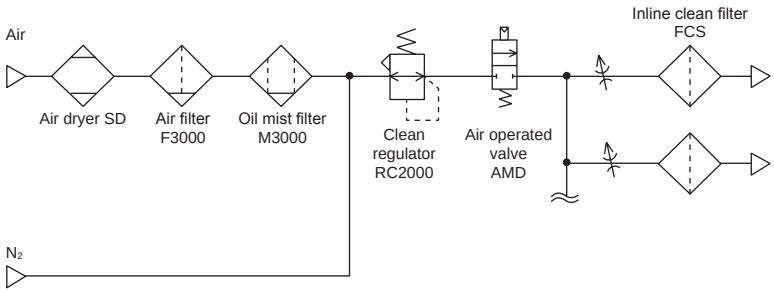

● Application 2: Use a vacuum break filter to blow in vacuum break circuit and provide clean air.

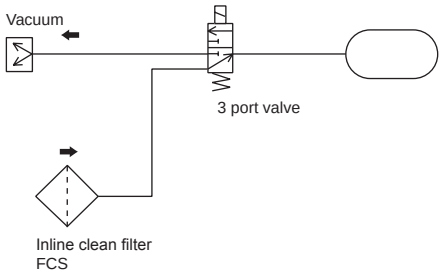

Custom order

These products are available as custom-made products. Contact CKD Sales Office for details.

FCS500 Connection section integrated

- This integrated connection having no sealed members is ideal for leakage testers.
- Flow rate: 10 ℓ/min (ANR) *1
- Port size : R1/8, R1/4

FCS500 Large flow rate

- FCS500 Series increased flow rate specifications
- Flow rate: 100 to 120 ℓ/min (ANR) *1
- Port size : ø6, ø8 push-in fitting, R1/8, R1/4

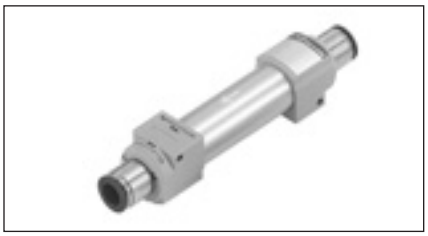

FCS500 Radial fitting

- Radial push-in fitting saves space during piping
- Flow rate: 50 to 80 ℓ/min (ANR) *1
- Port size : ø4, ø6, ø8 Radial push-in fitting

FCS1000 Stainless steel large flow rate

- Flow rate: 450 ℓ/min (ANR) *1
- Port size : Rc1/4, Rc3/8

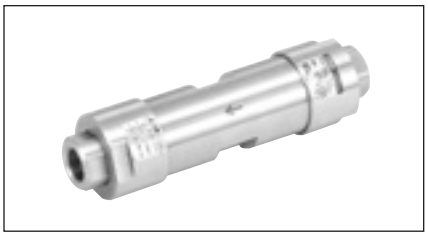

FCS Large flow rate large bore size

- Flow rate : 2000 ℓ/min (ANR) and over *1
- Port size : Rc1
- Body material: Aluminum (alumite treatment)

*1: Initial flow rate at primary pressure 0.7 MPa and pressure drop 0.03 MPa.
Contact CKD for other piping methods or port sizes.

FAC Series

Directly exhaust in clean rooms.

The innovative clean exhaust filter FAC Series with the newly incorporated hollow fiber membrane structure allows the exhaust air in the pneumatic circuit to be cleaned with high precision.
Direct exhausting is possible just by mounting this filter onto the exhaust port of devices in a Class 10 or less clean room.
The conventional external exhaust is no longer required allowing piping work, space and costs to be dramatically improved.

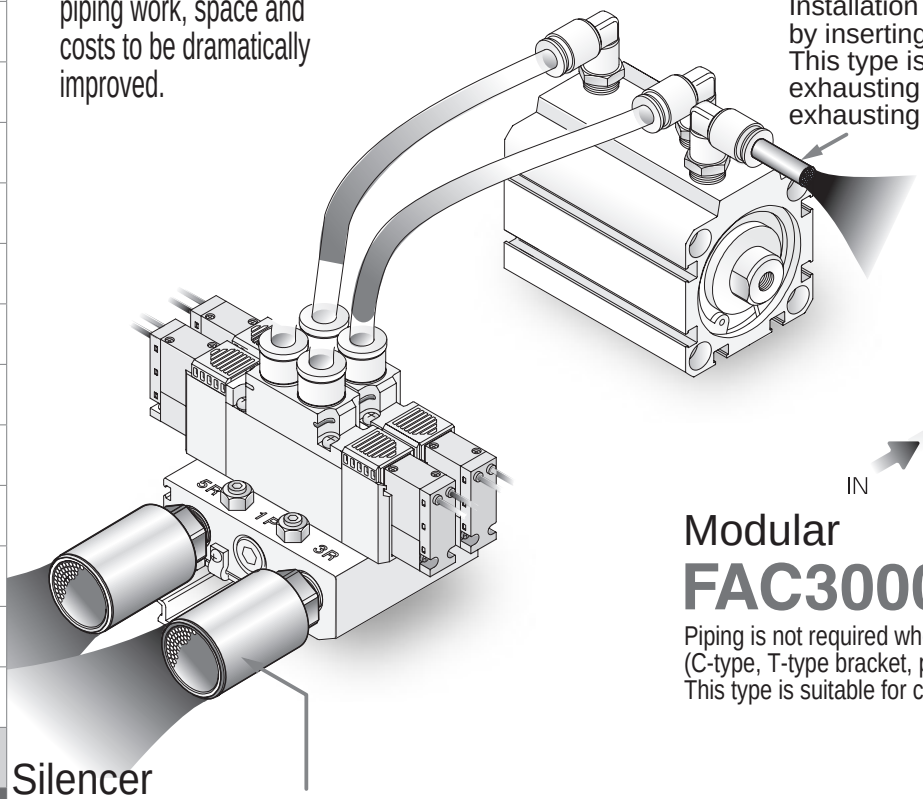

Plug
FAC10 Series

Installation is completed just by inserting the plug in by hand.
This type is suitable for exhausting cylinders and exhausting pilot air from valves.

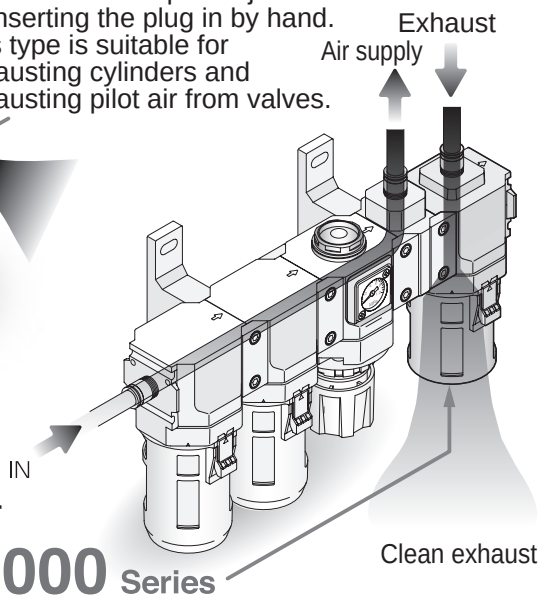

Modular
FAC3000 Series

Piping is not required when this type is connected to other modular devices (C-type, T-type bracket, piping adaptor, distributor, etc.).
This type is suitable for central exhaust and large flow rate exhausting.

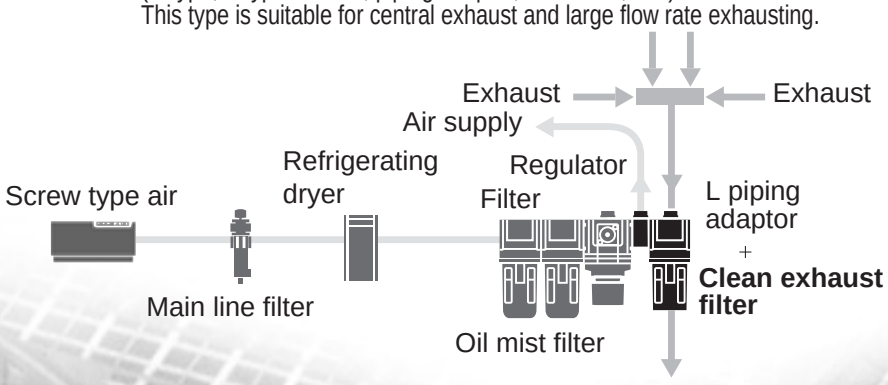

Silencer
FAC100/200 Series

This male thread is provided with a silencer function, and can be directly installed on the valve's R port.

Flow characteristics/FAC10

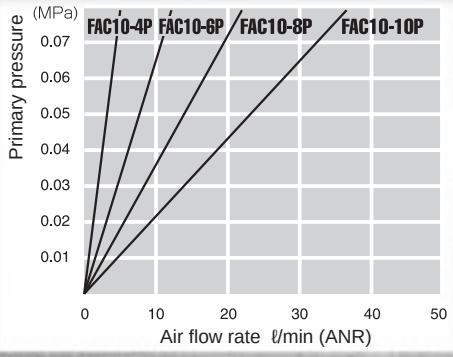

Flow characteristics/FAC100, FAC200, FAC3000

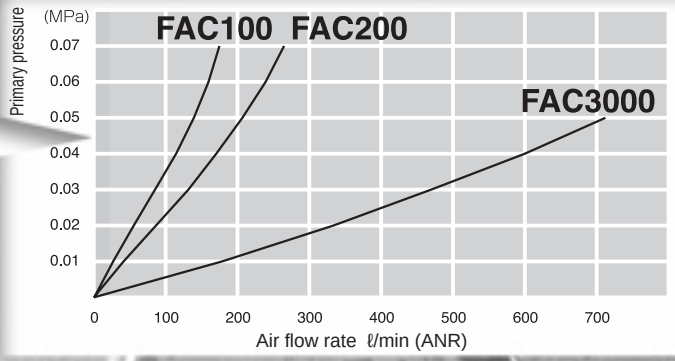

Revolutionary exhaust system for clean rooms

Precise filtration

0.01 µm filtration, 99.99% removal efficiency

High secondary cleanliness

99.999% of 0.1 µm and larger particles are removed

* Measurement conditions: 28.3 ℓ/min (ANR) flow rate

Cost reducing and space saving

The work, costs and space required for conventional external exhaust piping are eliminated.

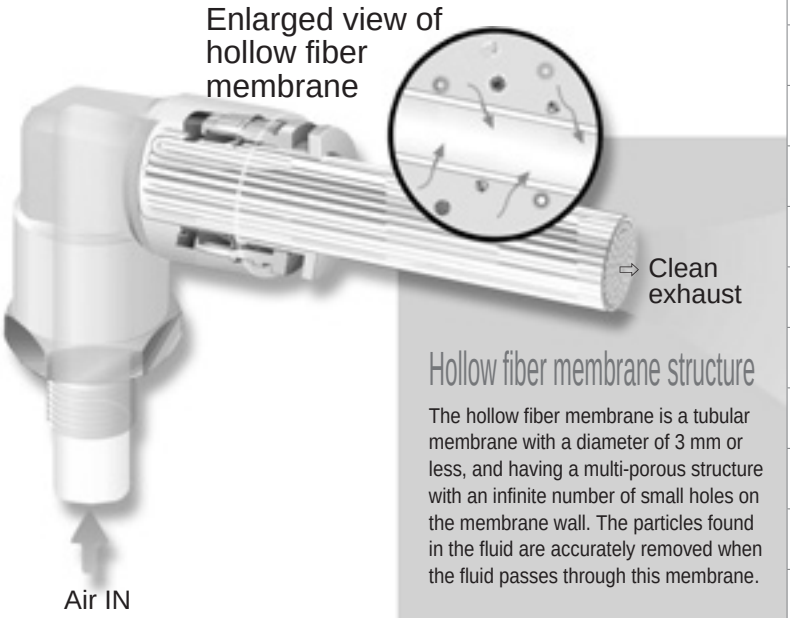

Hollow fiber membrane structure

The hollow fiber membrane is a tubular membrane with a diameter of 3 mm or less, and having a multi-porous structure with an infinite number of small holes on the membrane wall. The particles found in the fluid are accurately removed when the fluid passes through this membrane.

■ Hollow fiber membrane

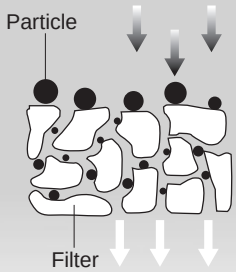

Simplified piping

All external exhaust piping can be eliminated by mounting the plug type on the cylinder and the silencer on the switching valve, thereby simplifying the piping.

Silencer function

The exhaust noise can be suppressed to 60dB (A) or less.

Ample variations

Three styles, the plug, silencer and modular as well as four flow rate series, 4 to 35, 100, 200 and 600 ℓ/min (ANR) are available.

Clean exhaust filter

FAC Series Variation

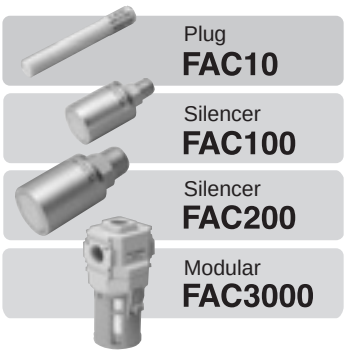

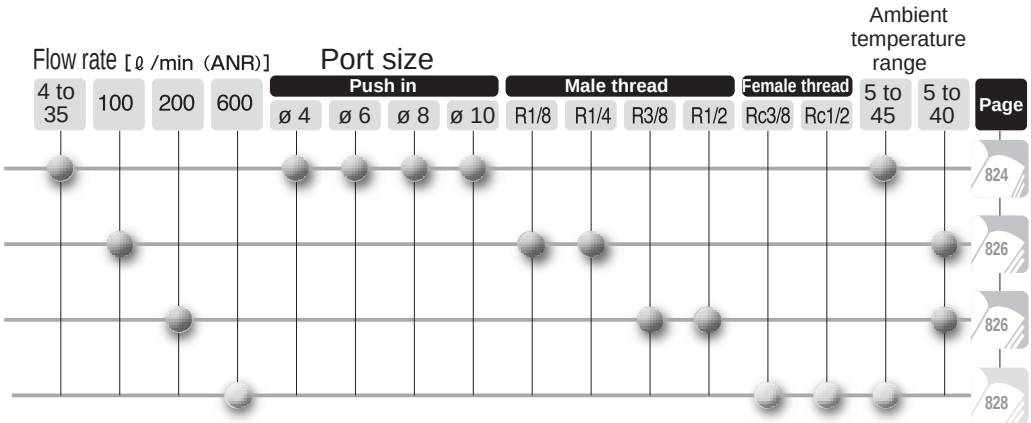

Precautions for selecting model

This is a high precision filtration, so the flow rate is lower than the normal silencer and cleaner. Refer to each specification for details.

Read safety precautions to ensure correct, safe product use.

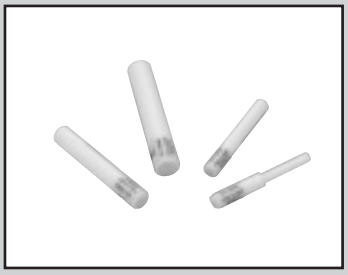

Clean exhaust filter

FAC10 Series

● Port size: ø4/ø6/ø8/ø10

RoHS CAD

Specifications

Model No.		FAC10-4P	FAC10-6P	FAC10-8P	FAC10-10P
Working fluid		Compressed air			
Max. working pressure	MPa	0.1			
Min. working pressure	MPa	0			
Proof pressure	MPa	0.3			
Ambient temperature/fluid temperature	°C	5 to 45			
Port size		ø4	ø6	ø8	ø10
Weight	g	2			3
Filtration rating	μm	0.01 (removal efficiency 99.99% and over)			
High secondary cleanness		0.1 μm or larger particles are completely (100%) eliminated *1			
Max. flow rate	ℓ/min (ANR)	4	10	20	35

*1: Maximum flow for measurement, or 28.3 ℓ/min (ANR) when the maximum flow is 28.3 ℓ/min (ANR) or more.

How to order

FAC10 — 4P

Ⓑ Port size

Code	Content
Ⓑ port size	
4P	ø4
6P	ø6
8P	ø8
10P	ø10

Flow characteristics

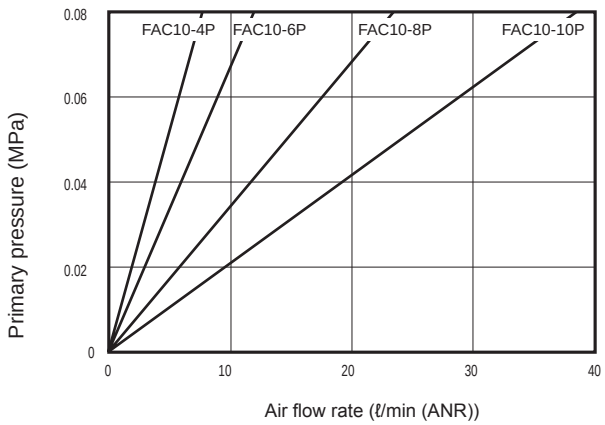

Noise level

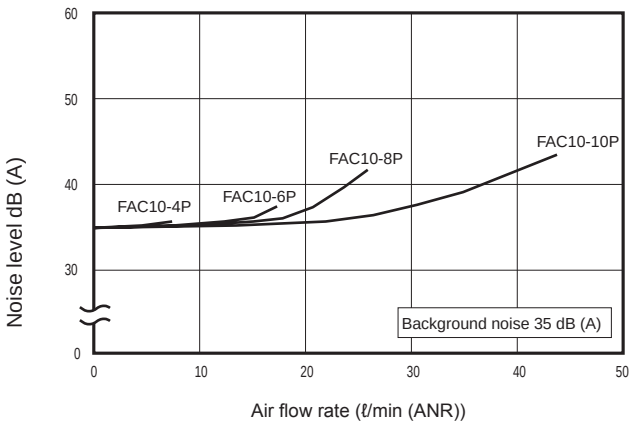

Selection guide

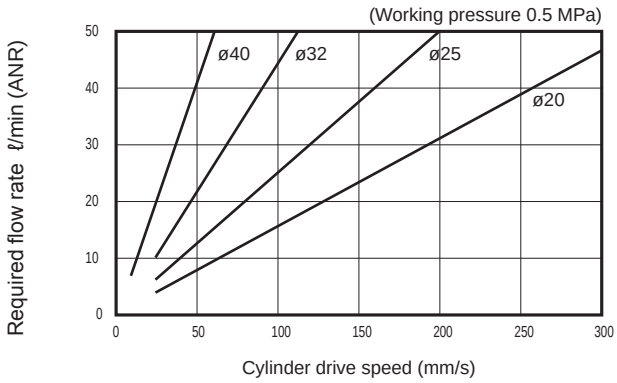

The clean exhaust filter model is selected based on the working circuit's required flow rate.
(1) Calculate the required flow rate for the actuator being used.
(2) Multiply the calculated flow rate by 1.4.
(3) Select a model having a flow exceeding the required flow rate multiplied by 1.4.

The above graphs show the required flow rate multiplied by 1.4 for each air cylinder size. Use this diagram to select a model.

Internal structure and parts list/dimensions

● FAC10-4P

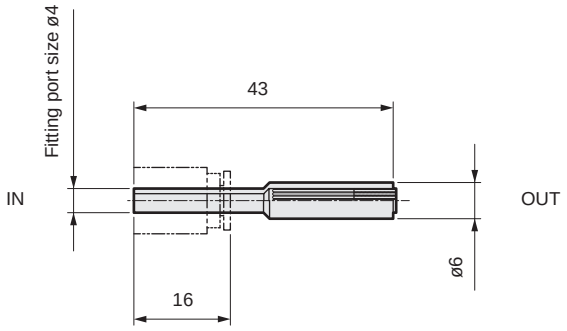

● FAC10-6P

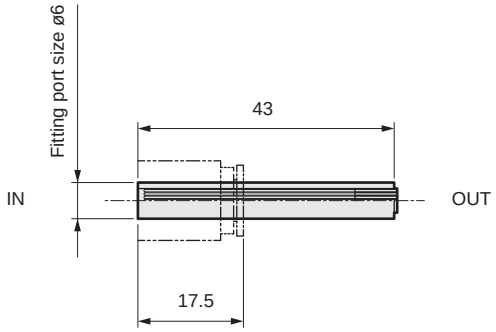

● FAC10-8P

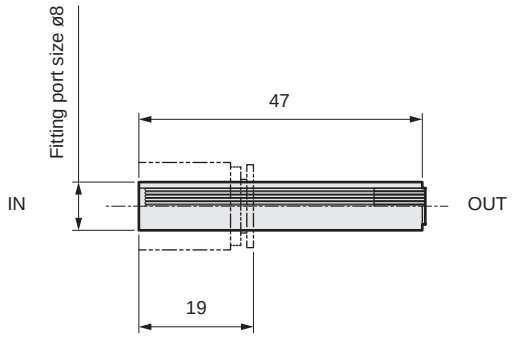

● FAC10-10P

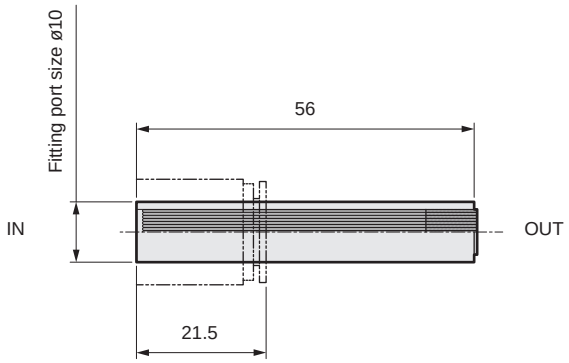

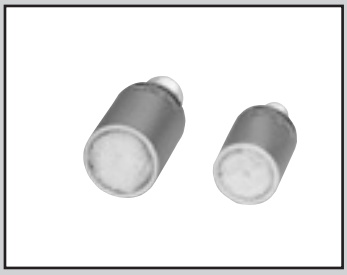

Clean exhaust filter

FAC100/FAC200 Series

● Port size: R1/8, R1/4, R3/8, R1/2

RoHS CAD

Specifications

Model No.		FAC100	FAC200
Working fluid		Compressed air	
Max. working pressure	MPa	0.1	
Min. working pressure	MPa	0	
Proof pressure	MPa	0.3	
Ambient temperature/fluid temperature	°C	5 to 40	
Port size		R1/8, R1/4	R3/8, R1/2
Weight	g	65	85
Filtration rating	μm	0.01 (removal efficiency 99.99% and over)	
High secondary cleanness		0.1 μm or larger particles are completely (100%) eliminated *1	
Max. flow rate	ℓ/min (ANR)	100	200

*1: Flow rate at the time of measurement: 28.3 ℓ/min (ANR).

How to order

FAC100 — **8A**

Ⓐ Model No. Ⓑ Port size

Code	Content	Ⓐ Model No. FAC100	Ⓐ Model No. FAC200
Ⓑ Port size			
6A	R1/8	●	
8A	R1/4	●	
10A	R3/8		●
15A	R1/2		●

Flow characteristics

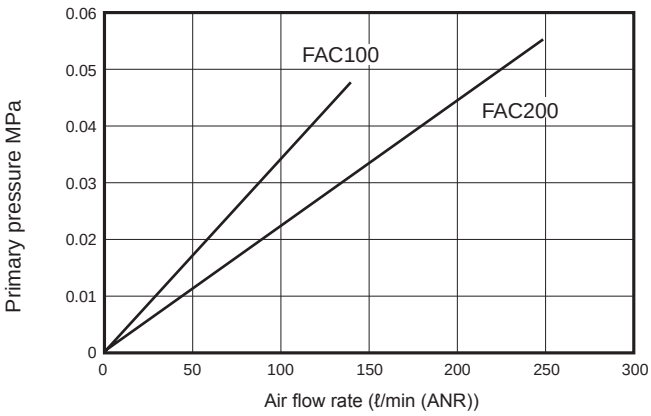

Noise level

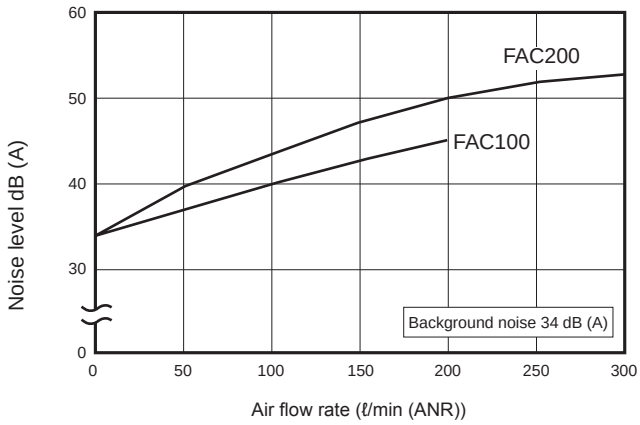

Selection guide

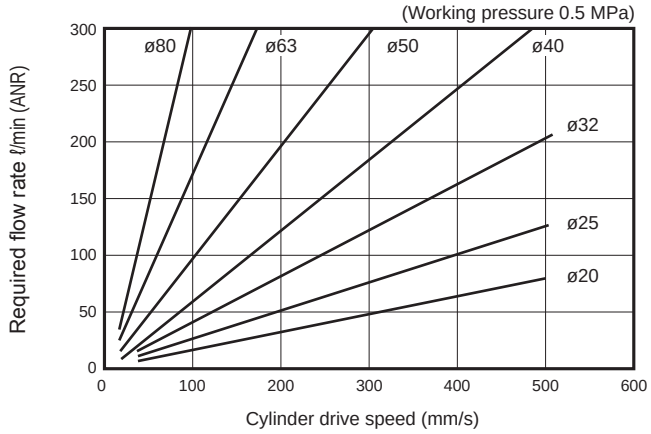

The clean exhaust filter model is selected based on the working circuit's required flow rate.
(1) Calculate the required flow rate for the actuator being used.
(2) Multiply the calculated flow rate by 1.4.
(3) Select a model having a flow exceeding the required flow rate multiplied by 1.4.

The above graphs show the required flow rate multiplied by 1.4 for each air cylinder size. Use this diagram to select a model.

Dimensions

● FAC100

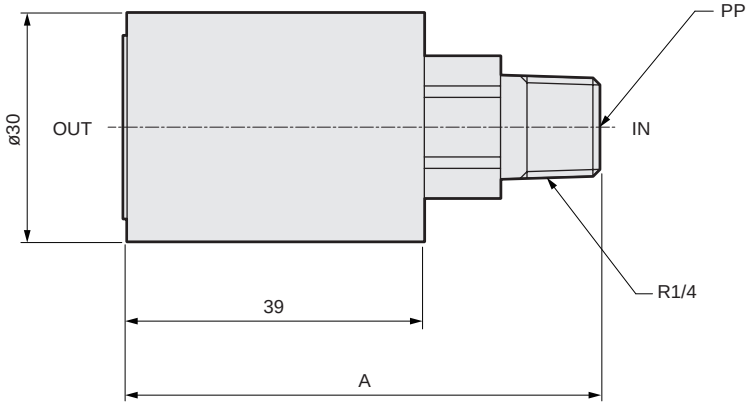

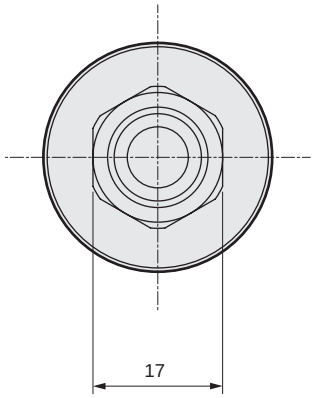

Model No.	A	Port size
FAC100-6A	59	R1/8
FAC100-8A	62	R1/4

● FAC200

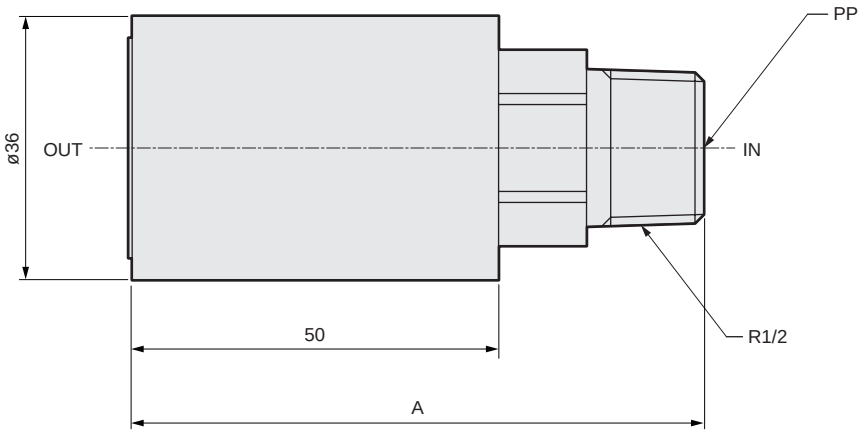

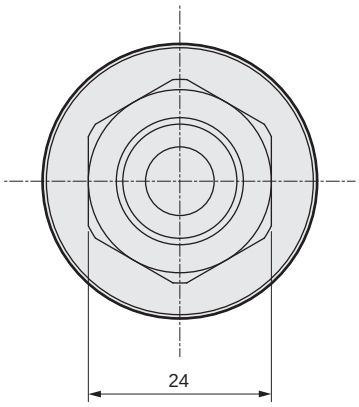

Model No.	A	Port size
FAC200-10A	75	R3/8
FAC200-15A	78	R1/2

Clean exhaust filter

FAC3000 Series

● Port size: Rc3/8, Rc1/2

Specifications

Model No.		FAC3000
Working fluid		Compressed air
Max. working pressure	MPa	0.1
Min. working pressure	MPa	0
Proof pressure	MPa	0.3
Ambient temperature/fluid temperature	°C	5 to 45
Port size		Rc3/8, Rc1/2
Weight	g	290
Filtration rating	μm	0.01 (removal efficiency 99.99% and over)
High secondary cleanness		0.1 μm or larger particles are completely (100%) eliminated *1
Max. flow rate	ℓ/min (ANR)	600

*1: Flow rate at the time of measurement: 28.3 ℓ/min (ANR).

How to order

FAC3000 — 10 — B

Model No.

Ⓐ Port size

Ⓑ Other attachments

Code	Content
Ⓐ Port size	
10	Rc3/8
15	Rc1/2
Ⓑ Other attachments	
Blank	Without attachment
B	C bracket: B320-P70

Note: 2 attachments are included, one R1/8 plug and one plug corresponding to the connection bore size (R3/8 or R1/2).

Bracket model No.
B320-P70

Flow characteristics

● FAC3000

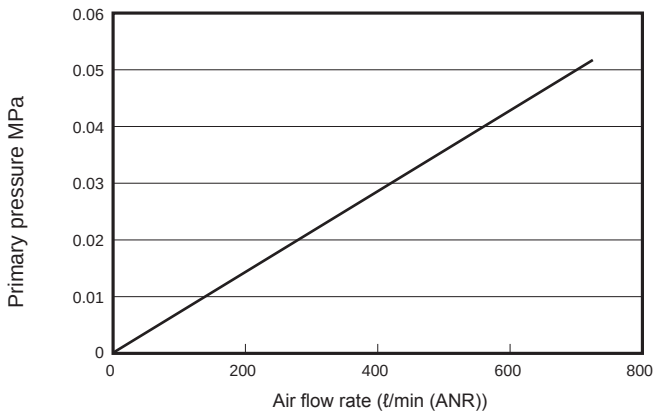

Noise level

● FAC3000

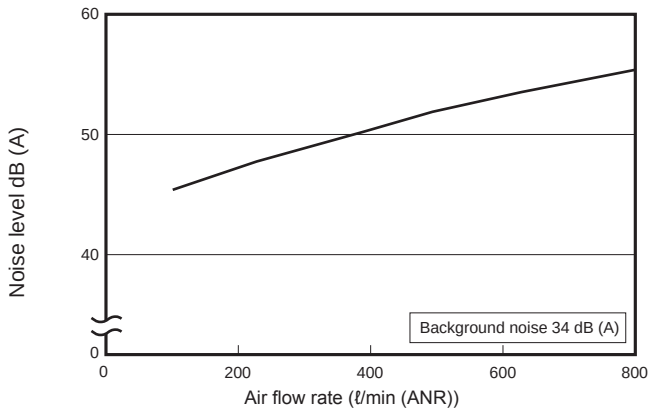

Selection guide

The clean exhaust filter model is selected based on the working circuit's required flow rate.
(1) Calculate the required flow rate for the actuator being used.
(2) Multiply the calculated flow rate by 1.4.
(3) Select a model having a flow exceeding the required flow rate multiplied by 1.4.

The graphs in right show the required flow rate multiplied by 1.4 for each air cylinder size. Use this diagram to select a model.

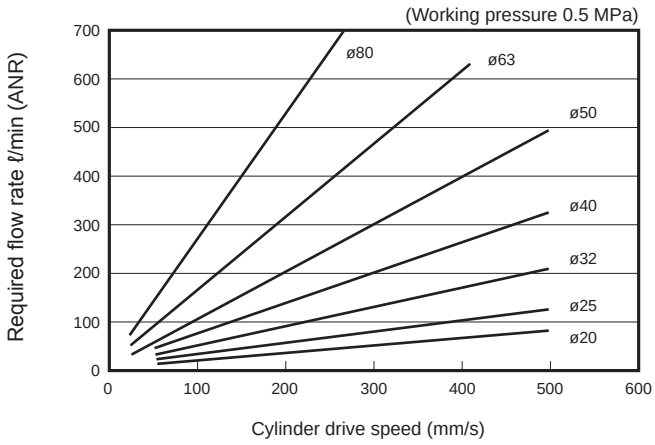

SCPD3
SCM
SSD2
MDC2
SMG
LCM
LCR
LCG
LCX
STM
STG
STR2
MRL2
GRC
Cylinder switch
MN3E MN4E
4GA/B
M4GA/B
MN4GA/B
F.R (module unit)
Clean F.R
Precision R
Press gauge Diff. press gauge
Electro-pneumatic R
Speed controller
Auxiliary valve
Fitting/ tube
Clean air unit
Pressure sensor
Flow rate sensor
Valve for air blow
Ending

Dimensions

● FAC3000

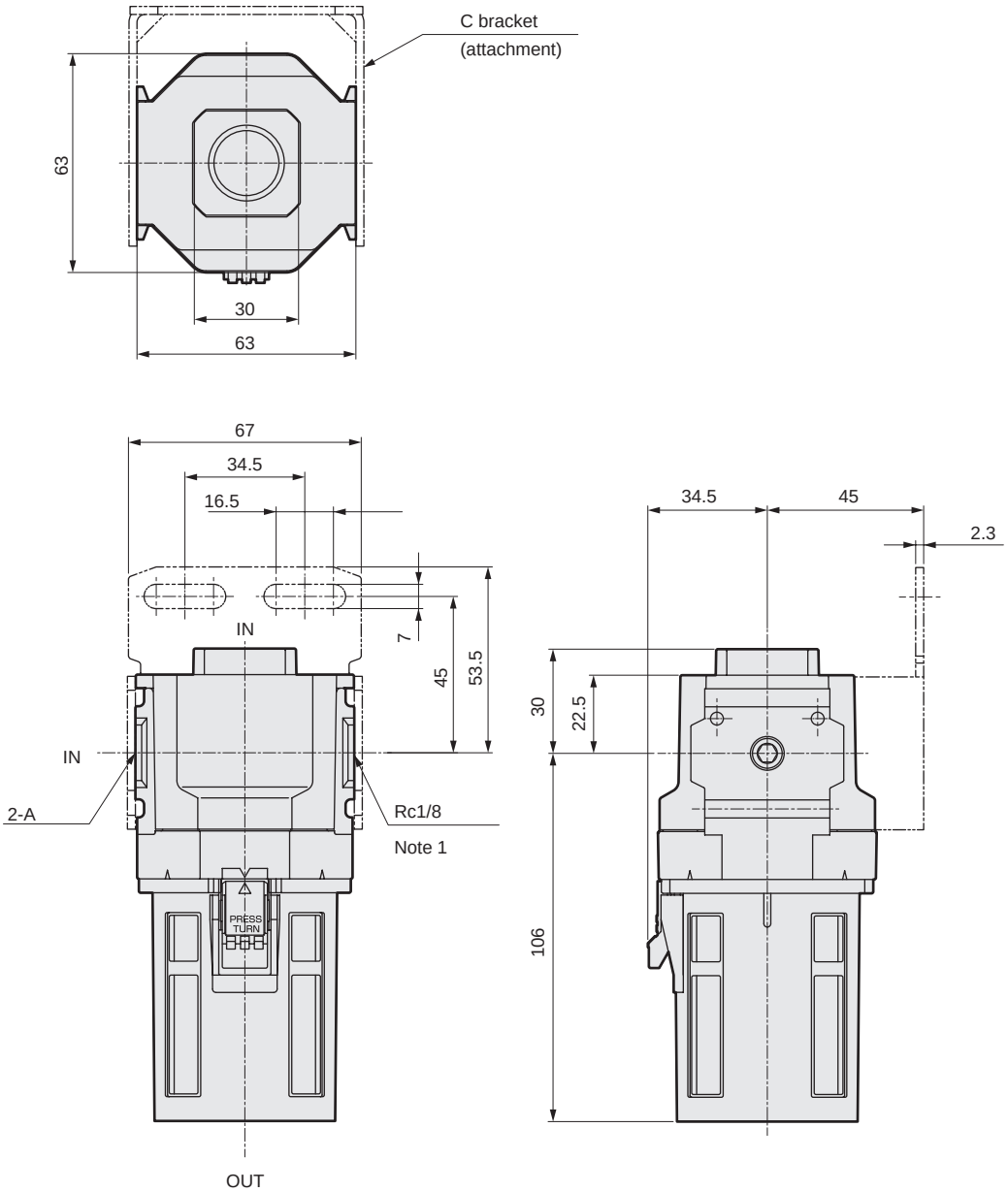

Model No.	A
FAC3000-10	R3/8
FAC3000-15	R1/2

Note 1: The Rc1/8 port can be used for treating air exhaust and monitoring element life. Replace the element when primary pressure exceeds 0.1 MPa. When not using this port, plug it with the R1/8 plug provided. Contact CKD for details on consumables such as elements.

MEMO

Clean regulator

RC2000 Series

● Port size: Rc1/4, Rc3/8, Rc1/2

JIS symbol

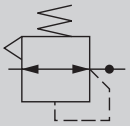

RoHS CAD

Overview

RC2000 Series with oil-prohibited specifications and stainless steel body is optimum for clean air and N_2 pressure control for semiconductor manufacturing equipment and liquid crystal device manufacturing equipment. The compact body and large flow rate capacity are suitable for air (N_2) blowing.

Features

● Oil-prohibited specifications
Precision cleaning is performed on the gas contact part and the manufacturing processes from assembling to packaging are completed in clean room. No grease is used on gas contact part.

● Compact/large flow rate
A large flow rate of 0.8 m^3/min. is realized even with just 50 mm face to face.
(Flow rate at 0.7 MPa primary pressure, 0.5 MPa set pressure, 0.1 MPa pressure drop)

● With reverse function (when back pressure is not applied)
This function reverses secondary pressure to the primary side when primary pressure is exhausted.
This safety-oriented product does not leave any pressure on the secondary side.

Specifications

Model No.		RC2000-8-P90	RC2000-10-P90	RC2000-15-P90
Working fluid		Compressed air, N_2		
Max. working pressure	MPa	1.0 / 0.5 for low pressure		
Proof pressure	MPa	1.5		
Fluid temperature/ambient temperature	°C	5 to 60		
Set pressure	MPa	Standard: 0.05 to 0.7 Low pressure: 0.02 to 0.2		*1
Port size (IN/OUT)		Rc1/4	Rc3/8	Rc1/2
Pressure gauge port size		Rc1/8		
Wetted section material	Metal	SUS316		
	Resin	PTFE		
	Rubber	FKM		
Assembling/inspection/packaging		Integrated production in cleanroom		
Cleaning (gas contact part)		Precision cleaning		
Weight	kg	0.47	0.45	0.59
Attachment weight	g	G49: 90, B3: 40, E1: 5		

*1: When using the standard type with a set pressure of 0.4 MPa or less, confirm that the primary pressure difference for the set pressure is within 0.5 MPa. When using the low pressure type, confirm that the primary pressure difference for set pressure is within 0.3 MPa.

How to order

RC2000 - 8 - LN - GY49B3E1 - P90

RC2000: Model No. (clean room specifications) (oil-prohibited specifications)

Ⓐ Port size	
8	Rc1/4
10	Rc3/8
15	Rc1/2
	(custom order)

Ⓑ Option *1		
Pressure range *2	Blank	0.05 to 0.7 MPa
	L	0.02 to 0.2 MPa
Relief mechanism	Blank	Pressure relief
	N	Nonrelief

Ⓒ Other attachments *1, 3	
Blank	Without attachment
GY49	Pressure gauge (G49D-6-*-P94)
GZ49	Pressure gauge (G49D-6-*-P90)
B3	L bracket
E1	Fitting (for exhaust)

Ⓓ Clean room specifications	
	Treatment
P90	Stainless steel material used, oil prohibited

*1: When selecting multiple options or attachments, indicate the model No. code in order from the top.
If there is blank for the option or attachment, delete the hyphen "-". (Example: RC2000-8-P90)
2: If "Blank" is selected for the pressure range, the 1.0 MPa pressure gauge (pressure gauge model: G49D-6-P10-P9) is used.
If "L" is selected for the pressure range, the 0.2 MPa pressure gauge (pressure gauge model: G49D-6-P02-P9*) is used.
*3: Two pipe plugs (R1/8) are included with the product. If a pressure gauge is selected as an attachment, one plug is included.

Flow characteristics

● RC2000-8-P90

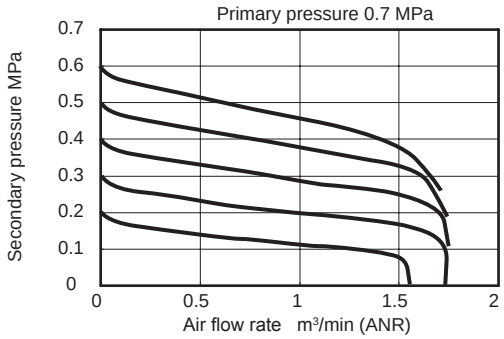

● RC2000-10-P90

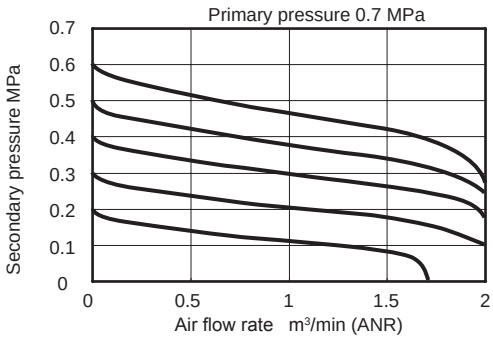

● RC2000-15-P90

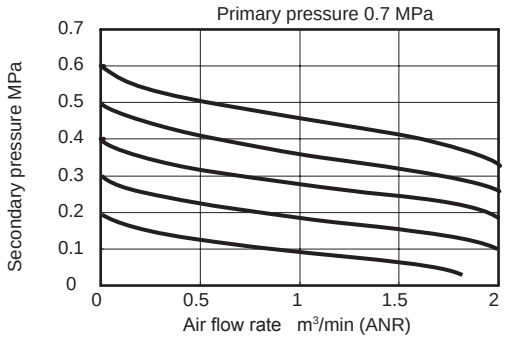

Flow characteristics (low pressure)

● RC2000-*-L-P90

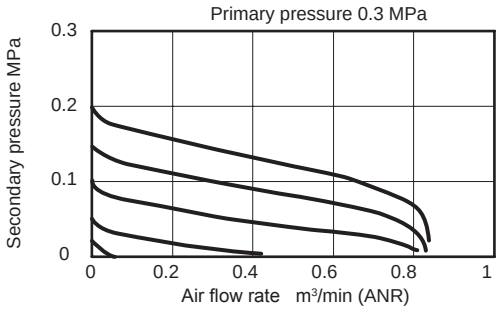

Pressure characteristics

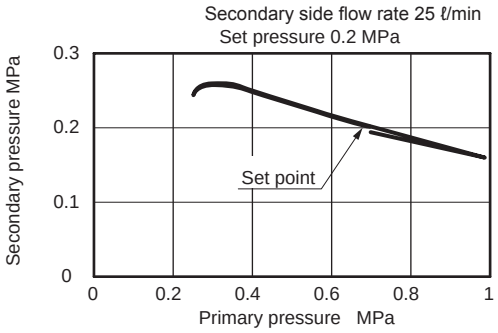

SCPD3
SCM
SSD2
MDC2
SMG
LCM
LCR
LCG
LCX
STM
STG
STR2
MRL2
GRC
Cylinder switch
MN3E MN4E
4GA/B
M4GA/B
MN4GA/B
F.R (module unit)
Clean F.R
Precision R
Press gauge Diff. press gauge
Electro-pneumatic R
Speed controller
Auxiliary valve
Fitting/ tube
Clean air unit
Pressure sensor
Flow rate sensor
Valve for air blow
Ending

Dimensions

● **RC2000-P90**

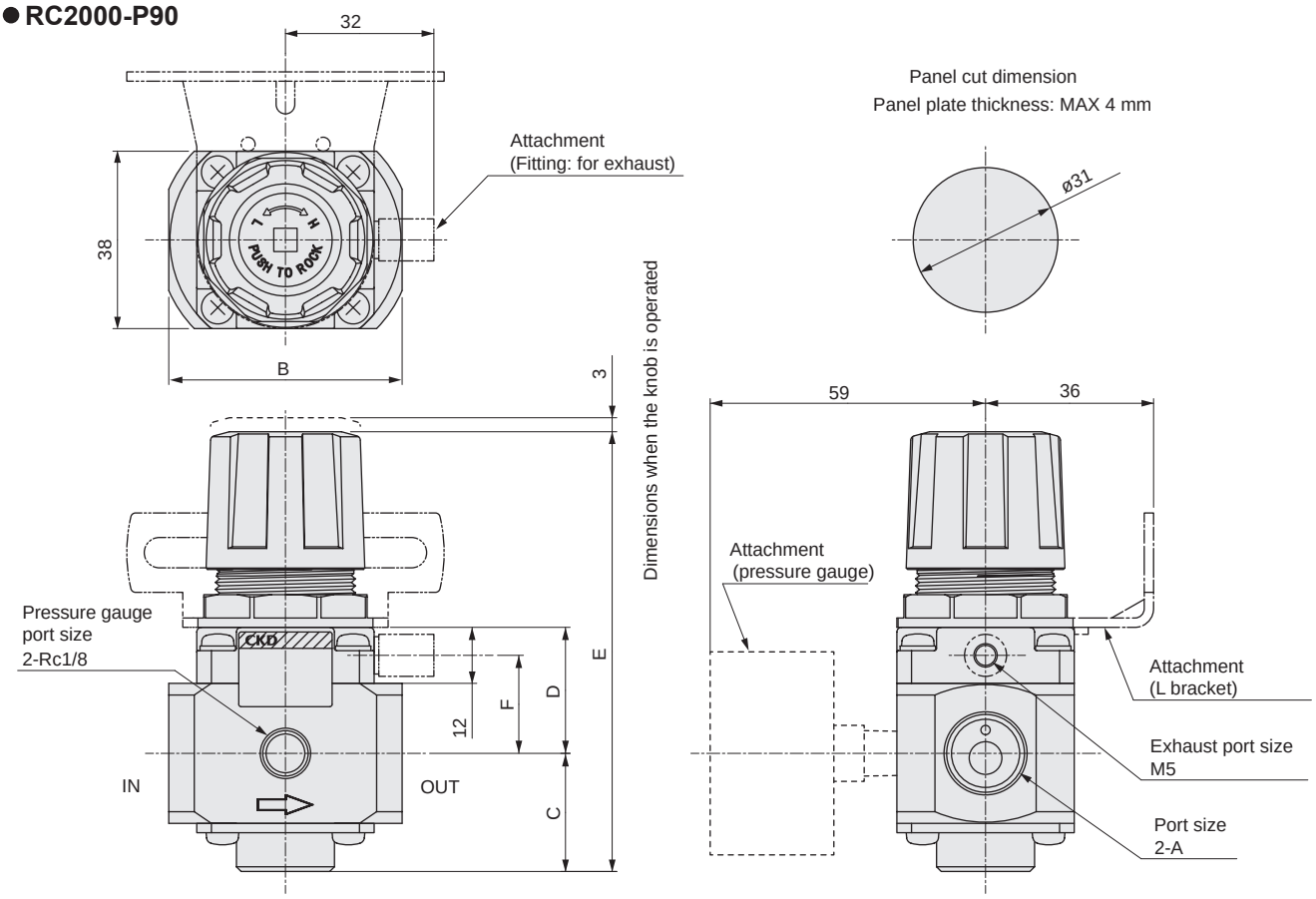

Model No.	A	B	C	D	E	F
RC2000-8	Rc1/4	50	25.5	27	95	21
RC2000-10	Rc3/8					
RC2000-15	Rc1/2	58	27.5	29	99	23

Attachment

● L bracket (-B3)
Part model No.: RC2000-B3
・Material: steel, nickel plate processing

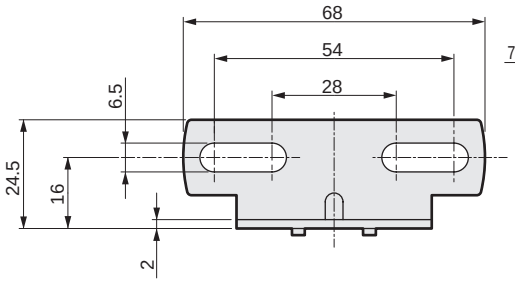

● Fitting (-E1)
Part model No.: RC2000-E1
・Material: steel, nickel plate processing

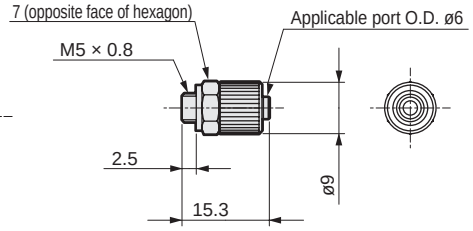

Model No.	RC2000-E1
Working fluid	Compressed air, N_2
Fluid temperature °C	5 to 60
Ambient temperature °C	5 to 60
Applicable tube	Urethane tube

Part	Material (treatment)
Metal part	Brass (nickel plating)
Rubber part	NBR

MEMO

Regulator

2619 Series

● Port size: Rc1/8, Rc1/4

JIS symbol

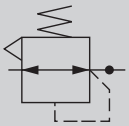

RoHS

Structure/treatment and material restriction

	Treatment	Material restriction			Model No.
P8 Series	Oil prohibited				– P80
P9 Series	Stainless steel material used, oil prohibited				– P90
	Stainless steel material used, oil prohibited	Copper-based materials prohibited	Silicon-based materials prohibited	Halogen-based materials prohibited (fluorine, chlorine, bromine)	– P94 Custom order product

Specifications

Descriptions		2619-1C/2C-P80	2619-1C/2C-P90/P94
Working fluid		Compressed air	
Max. working pressure	MPa	2.06	1.0
Proof pressure	MPa	3.09	1.5
Fluid temperature/ambient temperature	°C	5 to 60	
Set pressure	MPa	0.04 to 0.83	
Relief mechanism		With relief mechanism	
Pressure gauge port size	Rc	1/8	
Port size (IN/OUT)	Rc	1/8, 1/4	1/8, 1/4
Weight	kg	0.27	0.42
Weight of attached product	g	G: 90, B: 40	

How to order

2619 - 1 C - L B - P80

- 2619: Model No.
- 1: Ⓐ Port size
- L: Ⓑ Regulator
- B: Ⓒ Attached product
- P80: Ⓓ Clean room specifications *2

Code	Content
Ⓐ Port size	
1	Rc1/8
2	Rc1/4
Ⓑ Regulator	
Blank	Standard
N	Without relief mechanism
L	Low pressure (0.04 to 0.34 MPa)
Ⓒ Attached product	
Blank	None
G	Pressure gauge*1
B	Bracket

Ⓓ Clean room specifications

	Structure/treatment	Material restriction
P80	Oil prohibited	-
P90	Stainless steel material used, oil prohibited	-
P94	Stainless steel material used, oil prohibited	Copper-based/silicon-based/halogen-based materials (fluorine, chlorine, bromine) are prohibited

⚠ Precautions for model No. selection

*1: The clamp fitting and pipe plug are included.
*2: "P94" is custom order.

*1: The following pressure gauge is included:

Model No.	Standard pressure	"L" low pressure option
2619-*-P80	G49D-6-P10-P94	G49D-6-P04-P94
2619-*-P90	G49D-6-P10-P90	G49D-6-P04-P90
2619-*-P94	G49D-6-P10-P94	G49D-6-P04-P94

Bracket model No.

2619-B-P80

Flow characteristics

● 2619-1C-P80/P90/P94

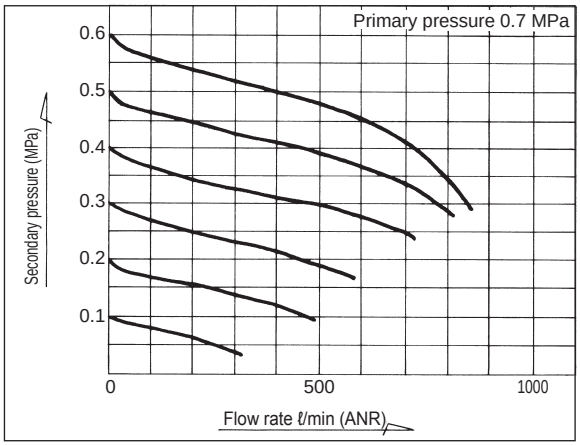

● 2619-2C-P80/P90/P94

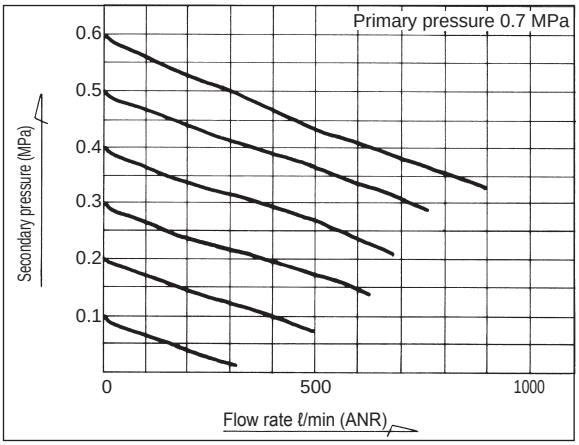

● 2619-1C-L-P80/P90/P94

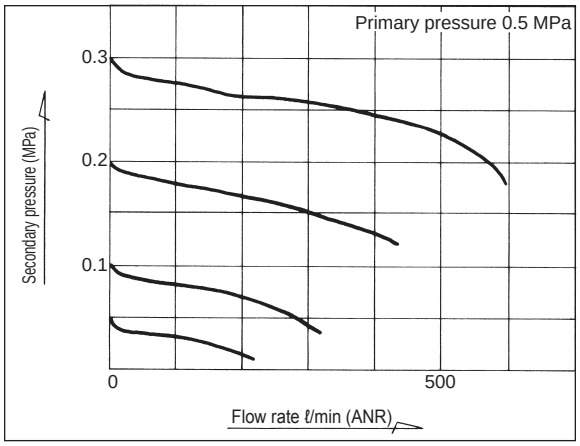

● 2619-2C-L-P80/P90/P94

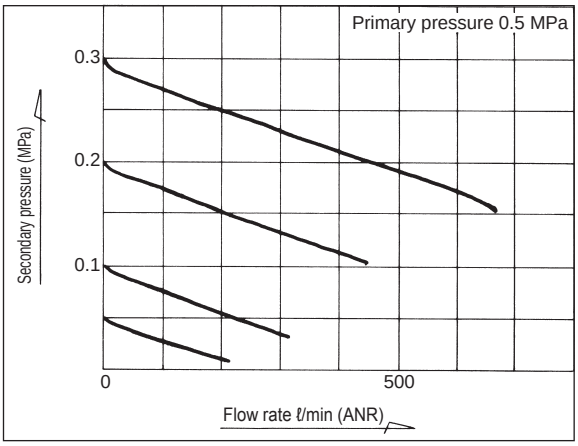

Pressure characteristics

● 2619-*-P80/P90/P94

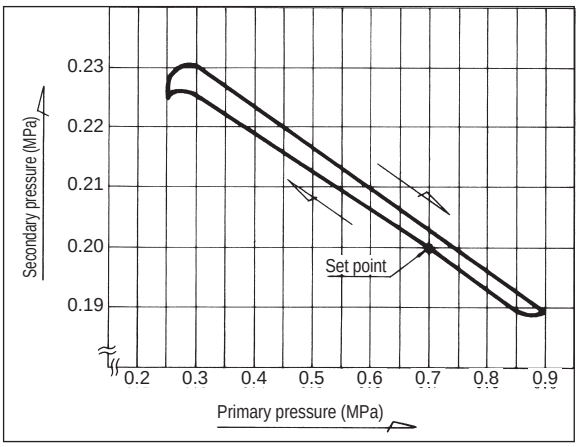

SCPD3
SCM
SSD2
MDC2
SMG
LCM
LCR
LCG
LCX
STM
STG
STR2
MRL2
GRC
Cylinder switch
MN3E MN4E
4GA/B
M4GA/B
MN4GA/B
F.R (module unit)
Clean F.R
Precision R
Press gauge Diff. press gauge
Electro-pneumatic R
Speed controller
Auxiliary valve
Fitting/ tube
Clean air unit
Pressure sensor
Flow rate sensor
Valve for air blow
Ending

Dimensions

● **2619-P80**

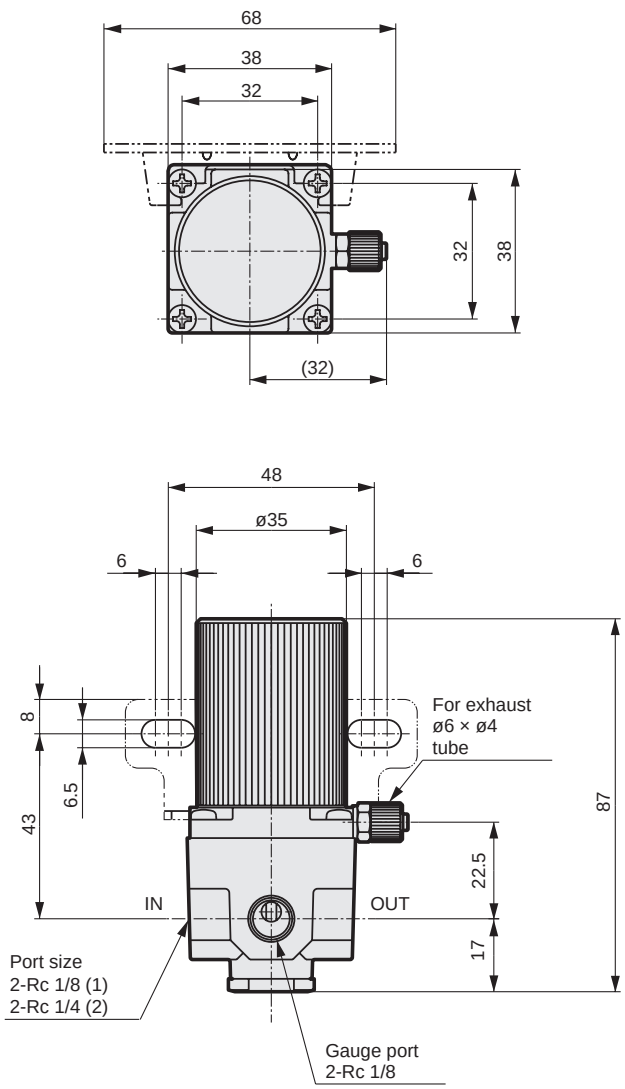

● **2619-P90/P94**

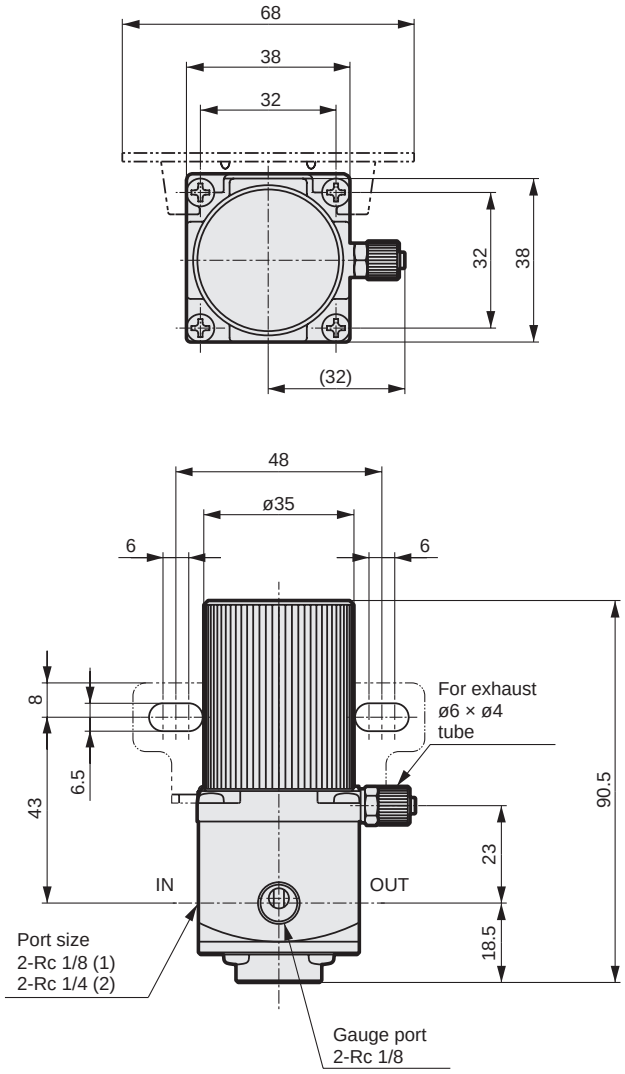

Bracket dimensions

● **2619-B-P80**

Bracket thickness 2 mm

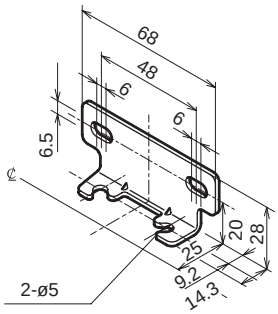

● Screw is supplied.

・Material: steel, nickel plate processing

MEMO

Safety precautions

Always read this section before use.
Refer to pages 764, 765 for pneumatic components general precautions.

Clean filter/clean exhaust filter/clean regulator series

Design & selection

1. COMMON

WARNING

- Use this product in accordance with the specifications range.
- This product is designed for industrial use. Do not use it in medical or human life related devices and circuits.

2. FCS Series

WARNING

- Do not use this product in an atmosphere containing organic solvents or chemicals, etc., or where the product could come in contact with them. Not observing this could damage the polyamide housing.
  Use the stainless steel model in these environments.

CAUTION

- Check the working circuit and working fluid.
  To prevent drop in filter performance, install dryer, air filter and oil mist filter on the primary side, and remove water or oil.
- Do not exceed max. working or differential pressure.
  Not observing this could damage the product or element membrane.
- Do not flow over the max. flow rate.
  Not observing this could degrade the filtration accuracy or damage element membrane.
- This device cannot be used as an absolute filter.
  FCS500 filtration is 99.99% within specified conditions.
  Do not use the product if foreign matter must strictly be kept out (e.g., direct blowing on wafers).
- Do not use where IN and OUT side pressure difference exceeds 0.1 MPa.
  Supplying air suddenly to the filter by blowing air with secondary side released to atmospheric pressure, etc., could make removal inefficient. Install a restriction valve on the filter's IN side to make the pressure difference 0.1 MPa or less.
- Alcohol is used in the manufacturing line of some parts of the product.

3. FAC Series

WARNING

- Piping, load torque
  If lateral load or torque is applied to the body and piping when connecting pipes, piping part may be damaged, so use within required torque. Do not apply the lateral load for FAC10.

	FAC100	FAC200	FAC3000
Max. torque N·m	15	50	50

CAUTION

- Check the working circuit and working fluid.
  Install dryer, air filter and oil mist filter on the pneumatic pressure source side, and remove water and oil.
- Water droplets cannot be removed.
  The hydrophobic element membrane does not circulate when not pressurized. When pressurized, water flows to the discharge side.
- Use the product within max. working pressure and working temperature range.
  If any sources of heat are present near devices, check that the product's operating ambient temperature is not exceeded. Not observing this could damage the product or element membrane.
- Do not flow over the max. flow rate.
  Calculate the treating flow rate of solenoid valve and actuator, and select the model with the flow rate less than max. flow rate. Circulating air exceeding the max. flow rate could reduce the cleanness of exhaust air and damage the element membrane.
- Install where the device is not adversely affected by flying dust.
- Do not install where exhaust air blows directly onto the workpiece, etc.
  Contact CKD when using this device for filtering.
- In case of common piping, solenoid valve may malfunction due to back-flow. If this occurs, attach a check valve to prevent back-flow.
  Refer to the flow characteristics table in the catalog to check the relationship of the processing flow rate and primary side pressure, and use the range and circuit that are not affected by back-flow on the primary side.
- Do not use a clean exhaust filter if the supplied pressure is more than 0.1 MPa.
  If compressed air of 0.1 MPa and over is supplied to a clean exhaust filter, the removal efficiency may become lower.
- Alcohol is used in the manufacturing line of some parts of the product.

4. RC2000/2619

⚠ WARNING

- Output pressure exceeding the regulator's set pressure could result in damage or faulty operation of the secondary side devices. Be sure to install a safety device.
- As the regulator may not always be usable with the secondary side sealed circuit or balance circuit, consult with CKD.
- Piping, load torque
  Avoid applying piping load or torque to the body or pipes.

	Rc1/8, Rc1/4	Rc3/8, Rc1/2, Rc3/4	Rc1 and over
Max. torque N·m	15	50	100

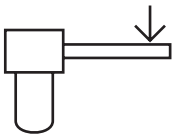

⚠ CAUTION

- Check the working circuit and working fluid.
  Circulating fluids containing solids or non-specified fluids could cause malfunctions. Connect a filter to the product's primary side so that solid matter does not enter.
- Pulsation may occur depending on the working conditions or piping conditions.
  Lower primary pressure if pulsation occurs.
- When the primary pressure is released, the secondary pressure flows to the primary side.
  If a problem occurs in another device due to the inflow of secondary-side fluid to the primary side, provide a circuit to retain the pressure.
- The setting range for the regulator's secondary side pressure should be within 85% of that of the primary side. Otherwise, the pressure drop may increase.

Mounting / Installation / adjustment

1. COMMON

⚠ CAUTION

- Open the package in a clean room.
  The product is packaged in a clean room. It is recommended that the package is opened immediately before making the piping in the clean room.
- Install the product avoiding direct sunlight.
- Flush and clean the pipes.
  Dirt or foreign materials in piping will lower product performance.
- Make sure that no foreign matter enters the pipes when connecting the pipes and fittings.
  When screwing in piping or fittings, check that swarf from port threads or sealant does not get inside. Dirt or foreign matter remaining in the piping will deteriorate product performance.
- Match the flow direction and the direction of the arrow on the product for correct connection.
  The RC2000 does not operate correctly if installed in reverse. With the FCS Series/FAC Series, service life is shortened.
- Securing of maintenance space
  Secure sufficient space for maintenance and inspection.
- Do not install this product in a location where it may be subject to vibrations or shocks.
- High moisture levels
  Install the air dryer and drain separator before the air filter. If there is a lot of moisture from the compressor, hot and highly humid air could shorten the device's life or result in corrosion.
- Water-lubricated compressor circuit
  Take measures to prevent chlorine-based substances from entering the compressed air.

2. FCS Series

⚠ CAUTION

- Pipe so no excessive force is applied to the product.
  When piping or installing, do not apply tension, pressure, bending or external force from tube, etc.
- Select correct piping tube.
  Use CKD's soft nylon tube and urethane tube.
  Contact CKD for other fluorine resin tube, etc.
- Securely insert a tube into the push-in fitting before use.
- Use the tang of the connection part when piping.
  In case of R thread or Rc thread piping, put the wrench across the tang of the connection part. Do not put it on any other part when tightening.
- Apply appropriate torque when connecting pipes.

Connecting thread	Tightening torque N·m
M5	1 to 1.5
Rc1/8, R1/8	3 to 5
Rc1/4, R1/4	6 to 8
Rc3/8, R3/8	13 to 15

Mounting / Installation / adjustment

⚠CAUTION

■ When supplying compressed air after connecting pipes, do not apply high pressure suddenly.
Connected piping could be dislocated and tubing could fly off.

■ When using male thread piping for both IN and OUT sides, confirm that piping does not apply a lateral load or bending torque during installation.
Not doing so could cause leaking.

3. FAC Series

⚠CAUTION

■ Do not apply excessive force to the product when connecting piping.
When piping, do not apply tension, pressure, bending, other forces from the pipe.

■ Apply adequate torque when connecting pipes. (Below table is torque recommended value)

Port thread	Tightening torque N·m
R1/8	3 to 5
R1/4	6 to 8
R3/8, Rc3/8	13 to 15
R1/2, Rc1/2	16 to 18

■ Tighten the hexagonal face when piping. (FAC100, FAC200)

■ The direct mounting of individual wiring manifold of M4GA/M4GB Series supports direct connection. Mask the port P on the port R side with FAC mounted and supply air from the port P on the opposite side.

Model No.	FAC100	FAC200
M4GA1	○	
M4GA2	○	
M4GB2	○	
M4GA3		○
M4GB3		○

● Direct connection of discrete and direct mounting to DIN rail is not possible.
● Note that the external dimensions of FAC are larger than those of the bottom of manifold base.

4. RC2000

⚠CAUTION

■ Open the package in a clean room.
This product is packed in a double layer in a cleanroom.
Open the first layer and take the product into the cleanroom.
Open the second layer just before piping.

■ When the panel mounting nut is loosened, the nut functions as a jack and enables the knob to be removed easily. Install the nut before installing the knob.

5. RC2000/2619

⚠CAUTION

■ Use proper torque to tighten the pipes when connecting them.
(The right table shows recommended tightening torque)

Port thread	Tightening torque N·m
M5	1.0 to 1.5
Rc1/8	3 to 5
Rc1/4	6 to 8
Rc3/8	13 to 15
Rc1/2	16 to 18

■ Use a pressure gauge and pipe plug to block the pressure gauge connection port.

■ When using regulators in parallel as shown below, do not use the OUT side as a closed circuit. If a closed circuit is required, install a check valve on OUT face of each regulator.

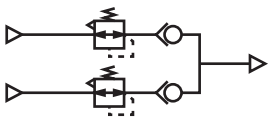

During use & maintenance

1. COMMON

⚠ WARNING

- Prevent the generated ozone from passing through the filter. Otherwise the filter element may be degraded. Take care especially when using an ozone generator (e.g., ionizer) together.
  (1) Do not install it in the upstream of the filter.
  (2) When installing it in the downstream of the filter, stop air while static electricity is neutralized since generated ozone may flow back.

- Check the filter periodically and replace it if necessary.

⚠ CAUTION

- Do not disassemble or modify the products.

- Stop fluid supply and confirm that no residual pressure exists before starting maintenance.

- Read instructions and precautions enclosed with the product before use or maintenance.

- Storage
  Do not store this product in a hot, humid atmosphere or atmospheric conditions outface of the specified range for a prolonged period of time. Resin or rubber parts could deteriorate, and the resin element housing could become discolored. Contact CKD before storing the product outface of the specified range.

2. FCS Series

⚠ CAUTION

- Clogging will decrease performance, so inspection or maintenance, or components regularly. (FCS500 Series cannot be replaced.)

- Check the resin for cracks, damage, and other deterioration periodically.
  Cracks, damage or other deterioration could result in breakage, so if found, replace with a new product or Stainless Steel type.

- While operating, do not apply vibration, impact, or other external force from tube.

3. FAC Series

⚠ WARNING

- Do not use this product in an atmosphere containing organic solvents or chemicals, etc., or where the product may come in contact with these substances. The polycarbonate housing may be damaged.

- Do not use this product where electrostatic discharge could occur.

- Be sure to securely insert FAC10 into the push-in fitting before use.

⚠ CAUTION

- Clogging will decrease performance, so inspection or maintenance, or components regularly.

4. RC2000/2619

⚠ CAUTION

- Release the lock before adjusting pressure.
  Turning a locked pressure adjustment knob could cause damage.

- Adjust pressure in the direction of pressure increase.
  The correct pressure cannot be set if pressure is adjusted downward.

- The nonrelief cannot be depressurized until the secondary side is spent.

- The set pressure changes from the initial set value based on the working environment and conditions, as well as aging of part materials.
  Periodically check the pressure, and should there be a change, reset the pressure accordingly.

MEMO

Precision regulator

Pressure adjustment device

CONTENTS

● **RP1000** **846**

● **RP2000** **850**

⚠ Safety precautions 854

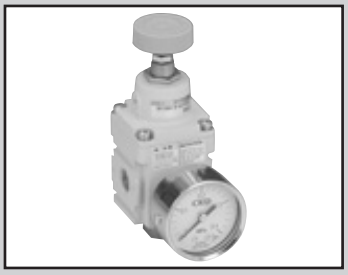

Precision regulator

RP1000 Series

● Port size: Rc1/4

JIS symbol

RoHS CAD

Specifications

Descriptions		RP1000-8-02-P70	RP1000-8-04-P70	RP1000-8-07-P70
Working fluid		Compressed clean air (refer to recommended air circuit on Intro 3)		
Max. working pressure	MPa	1.0		
Min. working pressure	MPa	Set pressure +0.1 (*1)		
Proof pressure	MPa	1.5		
Ambient temperature/fluid temperature	°C	-5 to 50 (no freezing)		
Set pressure range	MPa	0.003 to 0.2	0.005 to 0.4	0.005 to 0.7
Sensitivity		Within 0.1% of full scale		
Repeatability		Within ±0.5% of full scale		
Air consumption *2	ℓ/min (ANR)	1.3 or less		3.4 or less
Port size		Rc1/4		
Pressure gauge port size		Rc1/8		
Weight	g	250		

*1: Flow rate of the secondary side is to be zero. For PR1000-8-04, if the set pressure is 0.3 MPa and over, increase +0.2 MPa in the set pressure.
*2: The primary pressure is to be 0.7 MPa. Air is released to atmosphere normally.

How to order

RP1000 – 8 – 02 – P70 – GX49B3

(A) (B) (C) (D)

Model
RP1000:
Precision regulator

(A) Port size	
8	Rc1/4

(B) Set pressure range	
02	MAX. 0.2 MPa
04	MAX. 0.4 MPa
07	MAX. 0.7 MPa

(C) Clean room specifications	
	Structure
P70	Exhaust treatment

(D) Other attachments	
Blank	Without attachment
GX49 *1	Pressure gauge
GY49	Pressure gauge
B3	L bracket
E1	Fitting (for vent holes)

*1: "GX49" contains brass.
*2: A pressure gauge and a bracket are attached.
*3: A pressure gauge as same pressure range as the regulator is attached.
*4: One R1/8 plug is attached to the product.
*5: One GWS6-M5-S is attached to the product.

Discrete attachment model No.

Model No.	Discrete attachment model No.
RP1000-8-02-P70-GX49	G49D-6-P02-P70
RP1000-8-04-P70-GX49	G49D-6-P04-P70
RP1000-8-07-P70-GX49	G49D-6-P10-P70
RP1000-8-02-P70-GY49	G49D-6-P02-P94
RP1000-8-04-P70-GY49	G49D-6-P04-P94
RP1000-8-07-P70-GY49	G49D-6-P10-P94
RP1000-8- 02/04/07 -P70-B3	B131-P70
RP1000-8- 02/04/07 -P70-E1	R4000-E1-P70

Dimensions

● RP1000-P70

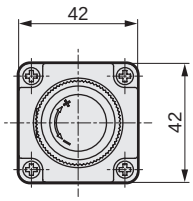

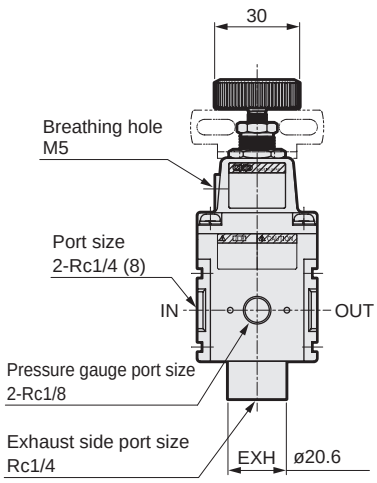

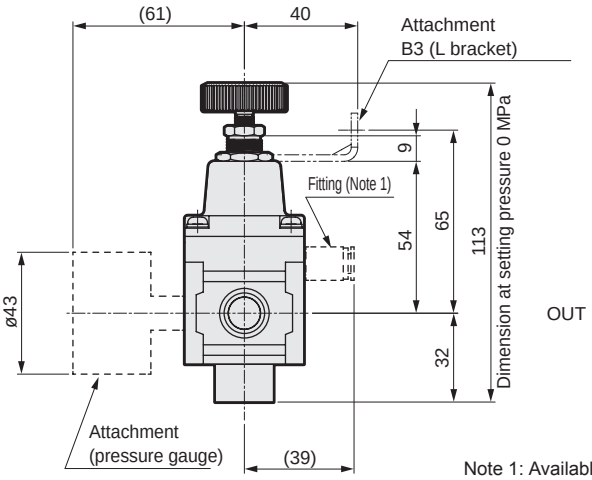

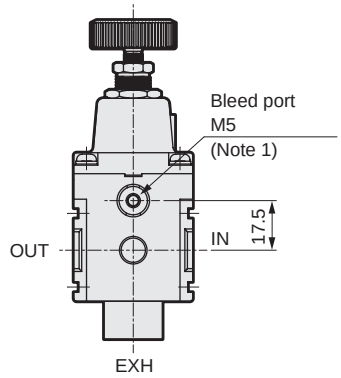

Note 1: Available fittings are limited to GWS6-M5-S (attached).
When using, pay attention not to prevent fitting, pressure gauge, and bracket from interference.

L bracket
・B131-P70
Weight: 29 g
・Material: steel, nickel plate processing

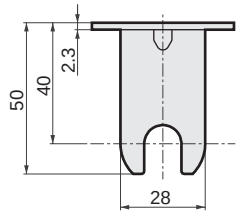

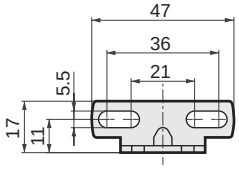

Fitting
・R4000-E1-P70
・Material: brass, nickel plate processing

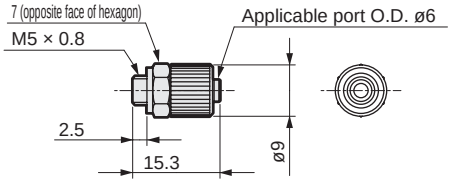

SCPD3
SCM
SSD2
MDC2
SMG
LCM
LCR
LCG
LCX
STM
STG
STR2
MRL2
GRC
Cylinder switch
MN3E MN4E
4GA/B
M4GA/B
MN4GA/B
F.R (module unit)
Clean F.R
Precision R
Press gauge Diff. press gauge
Electro-pneumatic R
Speed controller
Auxiliary valve
Fitting/ tube
Clean air unit
Pressure sensor
Flow rate sensor
Valve for air blow
Ending

Flow characteristics

● RP1000-8-02

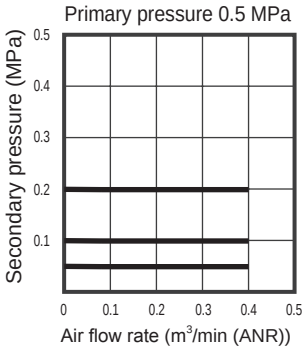

● RP1000-8-02
(Flow characteristics at low pressure)

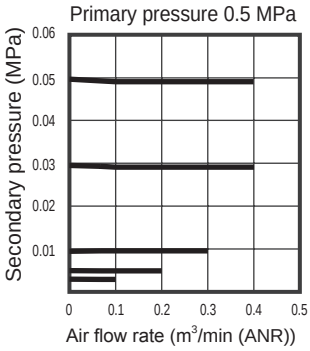

● RP1000-8-04

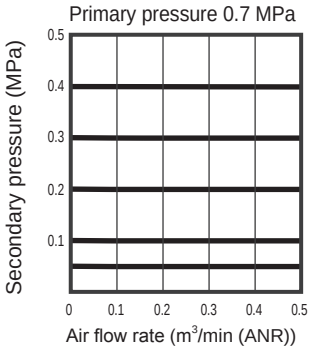

● RP1000-8-07

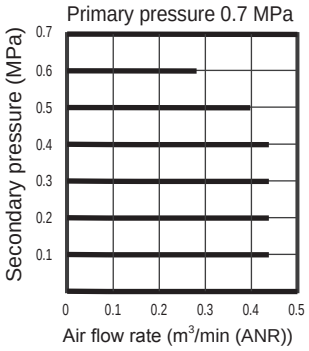

Relief flow characteristics

● RP1000-8-02

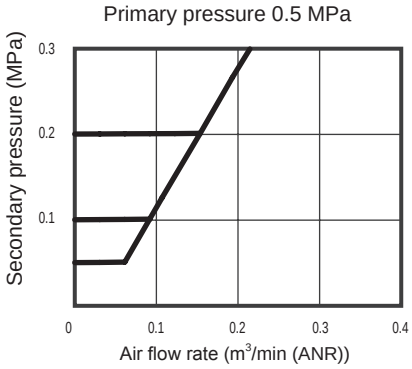

● RP1000-8-04

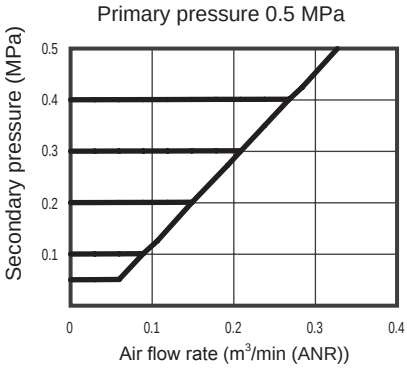

● RP1000-8-07

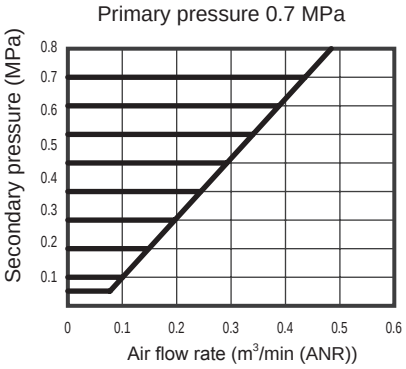

Pressure characteristics

● RP1000-8-02

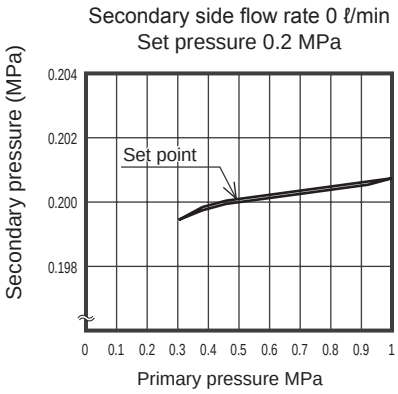

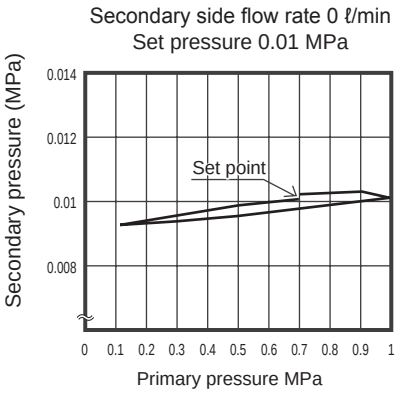

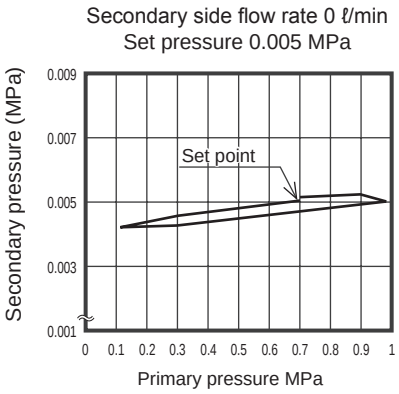

● RP1000-8-04

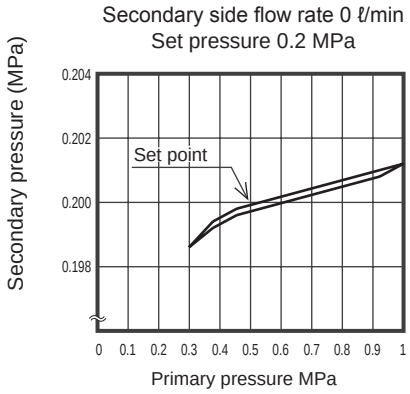

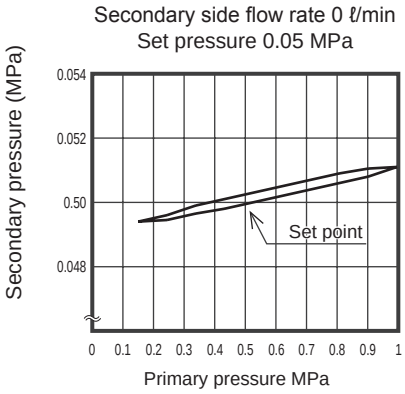

● RP1000-8-07

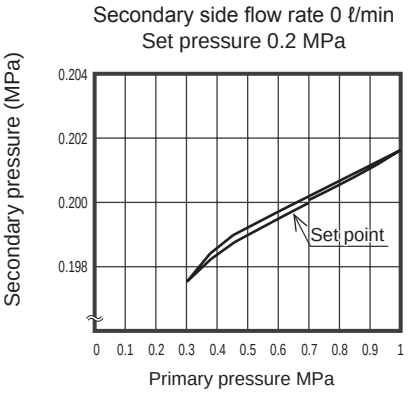

Cylinder speed range of RP1000

RP1000-8 cylinder table

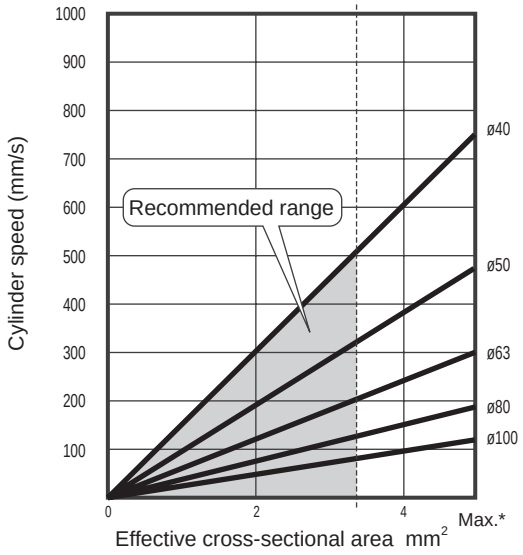

This cylinder table shows available range according to air supply/exhaust flow rate of precision regulator and required consumption flow rate at cylinder PUSH/PULL.

------- Recommended cylinder line
(70% of max. flow rate is recommended)
* Max. cylinder line
(Cylinder directly installed)

Precision regulator

RP2000 Series

● Port size: Rc1/4 Rc3/8

JIS symbol

RoHS CAD

Specifications

Descriptions		RP2000-8-08-P70	RP2000-10-08-P70
Working fluid		Compressed clean air (refer to recommended air circuit)	
Max. working pressure	MPa	1.0	
Min. working pressure	MPa	Set pressure +0.1 (*1)	
Proof pressure	MPa	1.5	
Ambient temperature/fluid temperature	°C	-5 to 50 (no freezing)	
Set pressure range	MPa	0.03 to 0.85	
Sensitivity		Within 0.2% of full scale	
Repeatability		Within ±0.5% of full scale	
Air consumption	ℓ/min (ANR)	5 or less *2	
Port size		Rc1/4	Rc3/8
Exhaust side port size		Rc3/8	
Pressure gauge port size		Rc1/8	
Weight	g	470	

*1: Flow rate of the secondary side is to be zero.
*2: Conditions where the primary pressure is 0.7 MPa and set pressure is 0.3 MPa. Consumed air is normally released to the atmosphere from the bleed port and EXH port. So, air consumption is the total of consumption volume released from the bleed port and EXH port. Air is released at 1 ℓ/min (ANR) or less from EXH port.

How to order

RP2000 – 8 – 08 – P70 – GX49B

(A) (B) (C) (D)

Model
RP2000:
Precision regulator

(A) Port size	
8	Rc1/4
10	Rc3/8

(B) Set pressure range	
08	MAX. 0.85 MPa

(C) Clean room specifications	
	Structure
P70	Exhaust treatment

(D) Other attachments	
Blank	Without attachment
GX49 *1	Pressure gauge
GY49	Pressure gauge
B	C bracket
E1	Fitting (for vent holes)

*1: "GX49" contains brass.
*2: If the port size Rc1/2 is required, use a piping adaptor set (model No.: A400-15-P70).
*3: Attachment is attached.
*4: The piping adaptor set and C bracket cannot be used together.
*5: One R1/8 plug is attached to the product.
*6: One GWS6-M5-S is attached to the product.

Discrete attachment model No.

Attachment code	Discrete attachment model No.
GX49	G49D-6-P10-P70
GY49	G49D-6-P10-P94
B	B220-P70
E1	R4000-E1-P70

Dimensions

● RP2000-P70

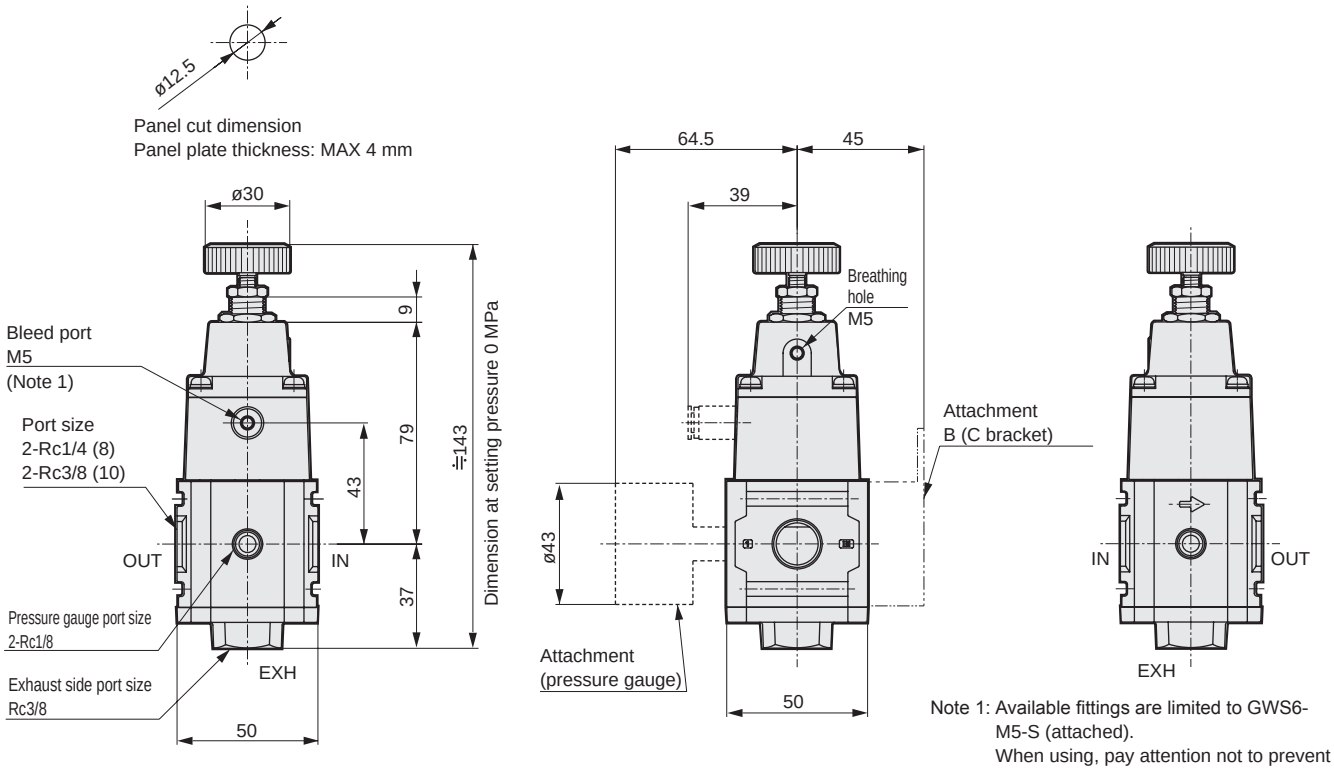

Note 1: Available fittings are limited to GWS6-M5-S (attached).
When using, pay attention not to prevent fitting and bracket from interference.

C bracket
・B220-P70
Weight: 150 g
・Material: steel, zinc plate processing

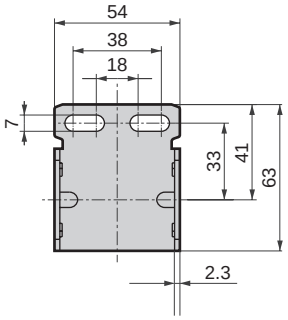

Fitting
・R4000-E1-P70
・Material: brass, nickel plate processing

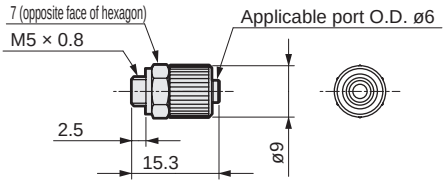

SCPD3
SCM
SSD2
MDC2
SMG
LCM
LCR
LCG
LCX
STM
STG
STR2
MRL2
GRC
Cylinder switch
MN3E MN4E
4GA/B
M4GA/B
MN4GA/B
F.R (module unit)
Clean F.R
Precision R
Press gauge Diff. press gauge
Electro-pneumatic R
Speed controller
Auxiliary valve
Fitting/ tube
Clean air unit
Pressure sensor
Flow rate sensor
Valve for air blow
Ending

Flow characteristics

● RP2000-10-08-P70

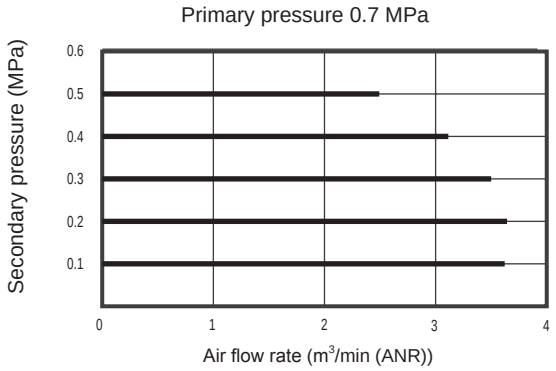

● RP2000-8-08-P70

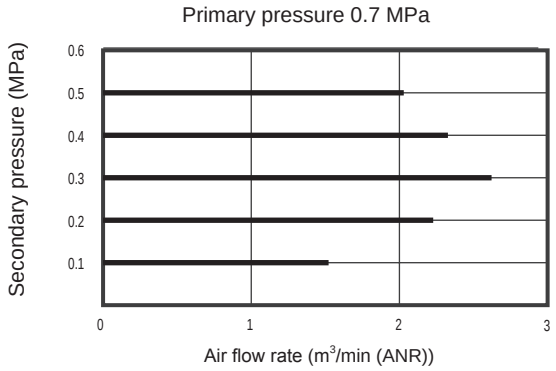

Relief flow characteristics

● RP2000-10-08-P70

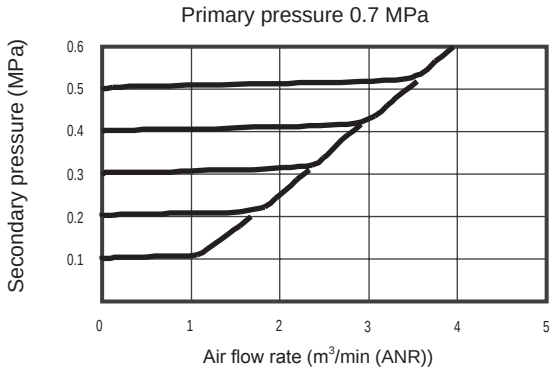

● RP2000-8-08-P70

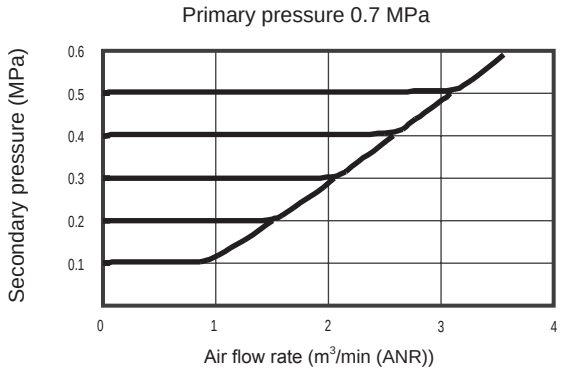

Pressure characteristics

● RP2000-*-08-P70

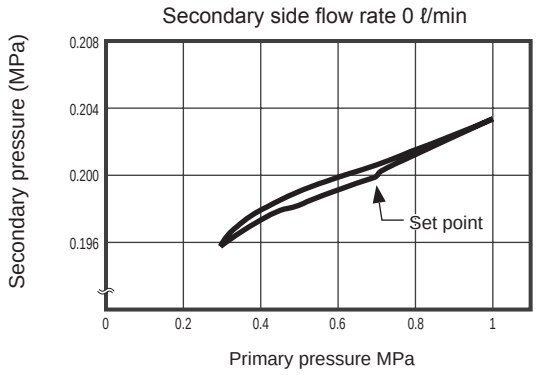

Cylinder speed range of RP2000

RP2000-10 cylinder table

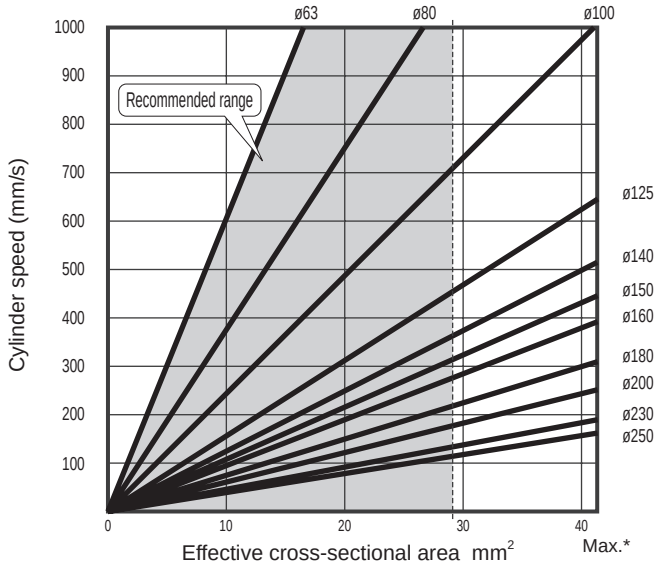

This cylinder table shows available range according to air supply/exhaust flow rate of precision regulator and required consumption flow rate at cylinder PUSH/PULL.

------- Recommended cylinder line
(70% of max. flow rate is recommended)
* Max. cylinder line
(Cylinder directly installed)

Safety Precautions

Always read this section before use.
Refer to pages 764, 765 for pneumatic components general precautions.

Precision regulator RP1000/2000 Series

Design & selection

WARNING

- Use this product in accordance with the specifications range.

- Working fluid must be clean air from which solids, water and oil have been sufficiently removed using a dryer, filter and oil mist filter. Never supply oiled air.
  When secondary pressure, etc., is turned OFF, air on the secondary side will pass through the regulator and be discharged from the EXH port. Thus, if secondary piping or inface of the load side is dirty, performance is adversely affected so characteristics will deteriorate. Keep the inface of pipes clean.

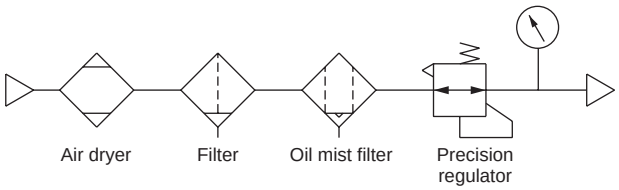

- O-ring grooves for module connection are provided on the OUT face of each product. Select piping that can be sealed with the O-ring groove diameter or less.

Series	RP1000	RP2000
groove diameter	ø17.6	ø25.4

CAUTION

- Keep the pressure difference between the primary and secondary sides to 0.1 MPa and over. Note that, for RP1000-8-04, if the set pressure is 0.3 MPa and over, keep the pressure difference at 0.2 MPa and over.
  (Precautions for RP1000)
  When using under conditioned with a small pressure difference between the primary and secondary sides, the secondary pressure could pulsate. In this case, decrease the pressure setting (high pressure → low pressure). Another method is to set the primary pressure to an extremely high level or to somewhat lower the setting pressure, and restrict the secondary side line. Consult with CKD if the pulsation still does not cease. When using with low friction cylinder having constant leak, secondary pressure may pulsate depending on working conditions. In this case, restrict the secondary side line and decrease the pressure setting (high pressure → low pressure) to attenuate pulsation. Contact CKD if the pulsation still does not cease.

  (Precautions for RP2000)
  If the pressure difference between primary and secondary sides is large and secondary side piping is large, secondary pressure could pulsate during low flow. In this case, set the primary side to the secondary side pressure +0.1 to 0.2 MPa or restrict the secondary side line.
  Contact CKD if the pulsation still does not cease.

- If the regulator is repeatedly turned ON and OFF with the directional switching valve on the primary side, the set pressure may change greatly. Thus, the directional switching valve should be installed on the secondary side.

- Install a safety device where an output pressure exceeding the regulator's set pressure value could result in damage or faulty operation of secondary side devices.

- Do not operate the pressure adjustment knob while the primary side is released to the atmosphere as performance could deteriorate.

Mounting / Installation / adjustment

CAUTION

- Open the package in a clean room.
  The products are wrapped in an antistatic sheet before packaged in a box. If you install the product in a clean room, we recommend you to take it out of the box outside the clean room before you bring it in and to open the package in the clean room.

- Check IN and OUT indications indicating the air inlet and outlet before connecting. Reverse connection could result in improper operation. If connected reversely, malfunction may be caused.

- Do not move or swing the product holding the adjustment knob on the regulator.

- Avoid installing this product where vibration and impact are present.

- Sufficiently flush air pipes before connecting the regulator.

- Check that sealing tape is not caught when piping.

■ When using regulator in parallel as shown below, do not use the secondary side as a closed circuit. If a closed circuit is required, set a check valve at the secondary side.

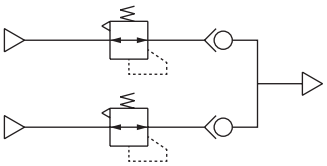

■ Install the regulator so that the EXH is not plugged.

■ When installing on a panel, completely loosen and remove the pressure adjustment knob, insert the body into the ø12.5 panel hole, and fix it to the panel with the panel mounting nut. Then, turn the pressure adjustment knob to attach it to the body. Panel mounting nut recommended tightening torque 2 to 3 N·m
(Precautions for RP2000)
If the product is installed with panel mount nut in a horizontal direction, the panel mount nut could be damaged by the product weight and vibration.

■ Use proper torque to tighten the pipes when connecting them.
- To prevent air leak and to protect threads from damage.
- First tighten the screw by hand to prevent threads from being damaged, then use a tool.

(Recommended values)

Port thread	Tightening torque N·m
Rc1/8	3 to 5
Rc1/4	6 to 8
Rc3/8	13 to 15

When using

⚠ CAUTION

■ Working air quality
- Use only compressed air. Air containing corrosive gases, fluids or chemicals could result in improper pressure adjustment due to body damage or rubber deterioration.

■ Environment conditions
- Avoid using the regulator in the following environment.
- Place where the ambient temperature exceeds -5 to 50˚C.
- Where air freezes.
- Where water drip and cutting lubricant contact to the product.
- Highly humid places where dew condenses due to temperature fluctuations.
- Where sea breeze or salt water could come in contact.
- If there is atmosphere containing corrosive gas, liquid or chemical material.
- Where the product is exposed to direct sunlight.
- With the precision regulator RP1000, the set pressure fluctuates by approx. 0.12 kPa/˚C. The pressure tends to drop when the temperature rises.

■ Precautions
- Air constantly leaks from the bleed port. This is necessary for precise pressure control, so do not plug the hole.
- Check primary pressure before setting pressure.
- Do not set a pressure higher than primary pressure.
- Turn the pressure adjustment knob clockwise to increase secondary pressure, and counterclockwise to lower pressure.
- Pressure is set in the depressurizing direction (high pressure → low pressure), so a highly precise setting can be made.
- After adjusting pressure, tighten the lock nut, and then fix the knob.
- As the precision regulator RP1000 exhaust valve is sealed with metal, a small amount of air may leak from the secondary side.

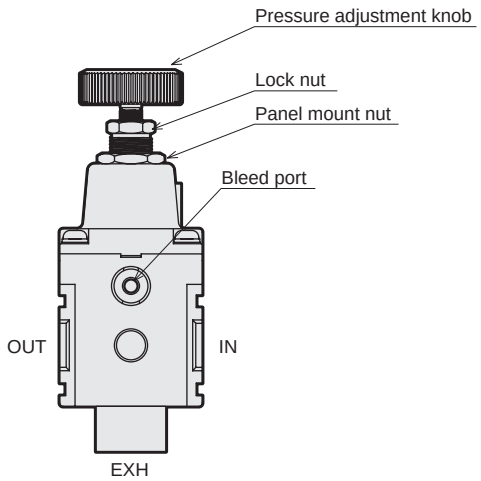

Pressure gauge/differential pressure gauge

Refining and pressure adjusting components

CONTENTS

● G49D/G59D 858
● GA400-8 859

Pressure gauge

G49D/G59D Series

● Port size: R1/8, R1/4

JIS symbol

RoHS CAD

Specifications

Descriptions		G49D-P70/P9*	G59D-P70/P9*
Working fluid		Compressed air, N_2	
Fluid temperature °C		5 to 60	
Ambient temperature °C		5 to 60	
Accuracy *1		Full scale ±3% (between 5 to 35°C)	
Shape		DT type (rear side screw, stump section square)	
Display size		ø43	ø52
Material	Bourdon tube	P90, P94: SUS316 P70: Brass	
	Stump	P90, P94: SUS14 (SUS316 equiv.) P70: Brass (nickel plating)	
	Housing	Steel (chrome plating)	
	Lens	Glass	
Pressure range MPa		0 to 0.2 0 to 0.4 0 to 1.0	
Port size R		1/8	1/4
Weight g		90	140

*1: The guaranteed indicator accuracy temperature is 20±15°C.

How to order

G49D - 6 - P04 - P90

Ⓐ Model No.

Ⓑ Port size

Ⓒ Pressure display

Ⓓ Clean room specifications

Code	Content
Ⓐ Model No.	
G49D	
G59D	
Ⓑ Port size *2	
6	R1/8 (G49D only)
8	R1/4 (G59D only)
Ⓒ Pressure display (MPa) *1	
P02	0 to 0.2
P04	0 to 0.4
P10	0 to 1.0

Ⓓ Clean room specifications

	Material	Oil-prohibited specifications	Assembly	Package
P70	Brass (nickel plating)	Oil prohibited/water prohibited	General environment	Clean packaging
P90	Stainless steel	Oil prohibited/water prohibited	Clean assembly	Clean packaging
P94	Stainless steel	Oil prohibited/water prohibited	General environment	Clean packaging

With P94, use of copper-based, silicon-based, and halogen-based materials (fluorine, chlorine, bromine) is not acceptable.

⚠ Precautions for model No. selection

*1: Displays other than a MPa display are custom order.
*2: NPT thread is available as custom order.
*3:"P94" is custom order.

Dimensions CAD

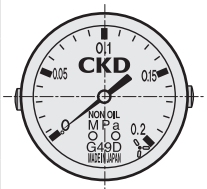

Pressure display: P02

Pressure display: P04

Pressure display: P10

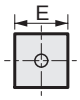

Sectional area A-A

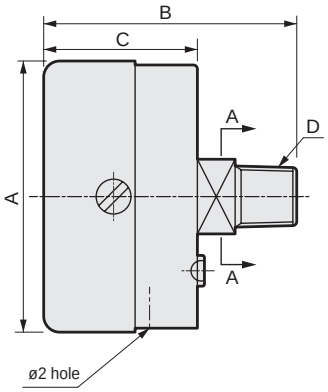

Model No.	A	B	C	D	E
G49D-6	ø43.5	40.5	24.5	R 1/8	12
G59D-8	ø52	46.5	28	R 1/4	14

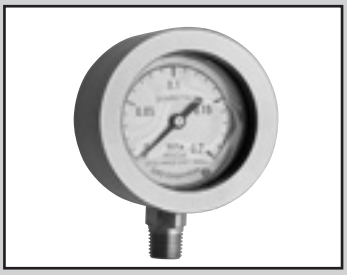

Differential pressure gauge

GA400-8-P02 Series

For controlling service life of air filter.

- Differential pressure measuring range: 0 to 0.2 MPa ±2.5%F.S.
- Port size: Rc1/4

JIS symbol

RoHS

Specifications

Descriptions		GA400-8-P02-P90
Max. working pressure	MPa	1.0
Proof pressure	MPa	1.5
Fluid temperature (ambient temperature)	°C	5 to 65
Differential pressure measuring range	MPa	0 to 0.2
Pressure gauge accuracy		Full scale ±2.5%
Port size (high pressure side)	R	1/4
Weight	kg	0.7

* For differential pressure gauge (GA400-8-P02), standard accessories include a 0.5-m nylon tube (O.D. ø4 × I.D. ø2.5), a single straight half union (port size: R1/4) and an elbow union (port size: R1/4).

Dimensions

GA400-8-P02-P90

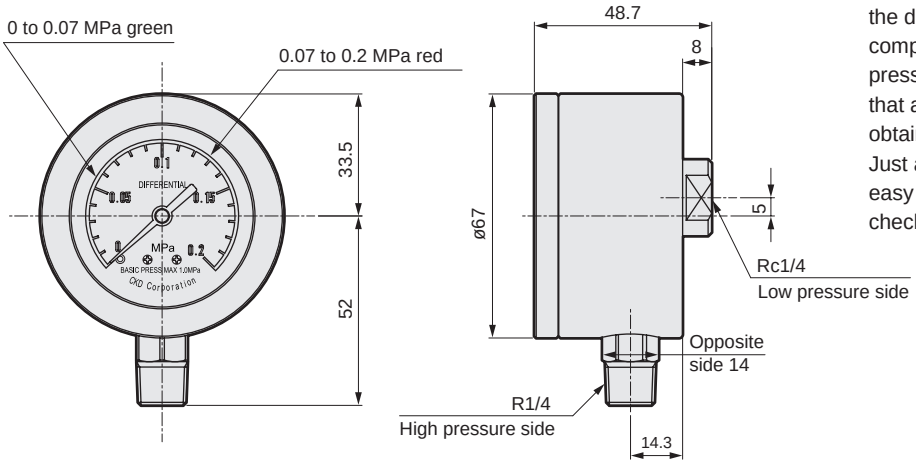

Operational principle

Applying the measuring principles of a pressure gauge, the differential pressure gauge measures the differential pressure between pneumatic components in the pneumatic circuit. Differential pressure is measured in the pressurized state, so that accurate and precise measuring results are obtained.
Just assemble the bypass circuit for quick and easy mounting. Maintenance is also easy: just check the pressure gauge.

Caution

⚠ Precautions

When assembling a stop valve in the by-pass circuit, always open the stop valve before supplying compressed air.

⚠ Safety precautions (GA400)

Note 1: Avoid direct sunlight.

Note 2: If the compressed air temperature during use is higher than the ambient temperature, the ambient temperature cools the differential pressure gauge and it may accumulate the water drop inface of the gauge.

Electro pneumatic regulator

Refining and pressure adjusting components

Overview

Components controlling air pressure electrically.

Features

(1) High precision/quick response system
Controlling pressure continuously according to applications.

(2) Changes pneumatics lines
Pressure setting for regulators in pneumatic lines can be remotely controlled by computer, etc.

CONTENTS

Electro pneumatic regulator

● **Solenoid valve vacuum compatible (EV2100V) 862**

Thin electro pneumatic regulator

Product introduction 866

● **Reduced wiring manifold (MEVT) 868**

Technical data 877

Manifold specifications 886

⚠ Safety precautions 888

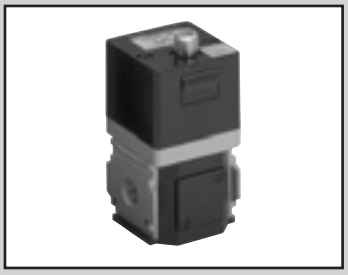

Electro pneumatic regulator (solenoid valve vacuum compatible)

EV2100V Series

JIS symbol

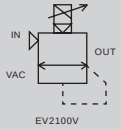

Overview

For electro pneumatic regulator EV2100V Series, feedback control with semiconductor pressure sensor and electronic control circuit is used to enable continuous and precise vacuum control with electric signals.

Features

- Compact and lightweight
- Enabling module
- Non-bleeding
- Pressure relief
- Precise/quick response
- Manifold available
- Various input signal
- Easy wiring
- Pressure monitor available
- Equivalent to degree of protection IP64

Specifications

Descriptions		EV2100V	EV2109V
Working fluid		Air (according to the recommended air circuit on page 869)	
Working pressure range		-96 kPa to -101.3 kPa	
Proof pressure	Inlet side	196 kPa	
	Outlet side	196 kPa	
Guaranteed pressure accuracy range *5		-10.1kPa to -91.2kPa (10 to 90% F.S.)	
Power supply voltage		24 VDC ± 10% (stabilized power supply with ripple rate 1% or less)	
Current consumption		0.1 A or less (0.6 A rush current when the power is turned ON)	
Input signal (input impedance)		0-10 VDC (20 kΩ) / 0-5 VDC (10 kΩ) / 4-20 mADC or 1-5 VDC (250 Ω) *1	10 kΩ variable resistance or 0-10 VDC (20 kΩ)
Analog output		1-5 VDC (none for 10 kΩ variable resistance input)	
Hysteresis		1% F.S. or less *2	
Linearity		±0.5% F.S. *2	
Resolution		0.5% F.S. or less *2	
Repeatability		0.5% F.S. or less *2	
Temperature characteristics	Zero drift	0.15% F.S./°C or less	
	Span drift	0.07% F.S./°C or less	
Max. flow rate (ANR)		150 ℓ/min	120 ℓ/min
Step response *3	No load	0.6 sec or less	
	1 ℓ load	2.0 sec or less	
Mechanical vibration proof		98 m/s² or less (JIS C60068-2-6)	
Ambient temperature		5 to 50°C	
Degree of protection		IP64 or equivalent (body), IP67 (cable connector) *4	
Port size		Rc1/4	
Weight (main body)		300 g	320 g

*1: When 1-5 VDC signal voltage is used, 4-20 mA current enters from the signal source to EV. Confirm specifications of the signal source before use.
*2: The condition of the values above is: Working pressure range -96.0 to -101.3 kPa, 24 ± 0.1 VDC power supply voltage, 25 ± 3°C ambient temperature, no load, and 10 to 90% control pressure. Limited to a closed circuit in the secondary side. If used with opening secondary side, vacuum pressure would lower or change.
*3: Working pressure: -100 kPa, step rate: 50% F.S. → 90% F.S.
50% F.S. → 60% F.S.
50% F.S. → 40% F.S.
*4: The degree of protection of body IP64 is applied only when installed with facing connector upward. Characteristics above is within working pressure range. If used exceeding working pressure range, please contact CKD.
*5: There is a residual pressure of 0 to -5 kPa when the input signal is 0%. Refer to the input/output characteristics graph (page 864).

How to order

EV210 0 V - 1 08 - C11 - P70

- Ⓐ Body
- Ⓑ Input signal
- Ⓒ Port size
- Ⓓ Option *1 *3
- Ⓔ Clean room specifications

Code	Content
Ⓐ Body	
0	Discrete
9	A single manifold
Ⓑ Input signal	
0	0-10 VDC
1	0-5 VDC
2	4-20 mA or 1-5 VDC
3	10 kΩ variable resistance or 0-10 VDC (connected to 10 VDC built-in power supply)
Ⓒ Port size	
08	Rc1/4
Ⓓ Option	
Cable option	
Blank	None
C11	1 m attached
C13	3 m attached
Intake option	
Blank	Intake block 1
K1	Intake block 2
Bracket option	
Blank	None
B4	B bracket
T	T bracket

Ⓔ Clean room specifications	
	Structure
P70	Exhaust treatment

Note on selection guide

*1: Model No.only with an option can be expresses by the following: **EV2000 - Option code - P70.**
*2: However, combination of optional "intake block 1" and " T bracket" is not available.
*3: The bracket option B4 cannot be used when using the EV2109V (manifold).

Dimensions

● EV2100V-P70

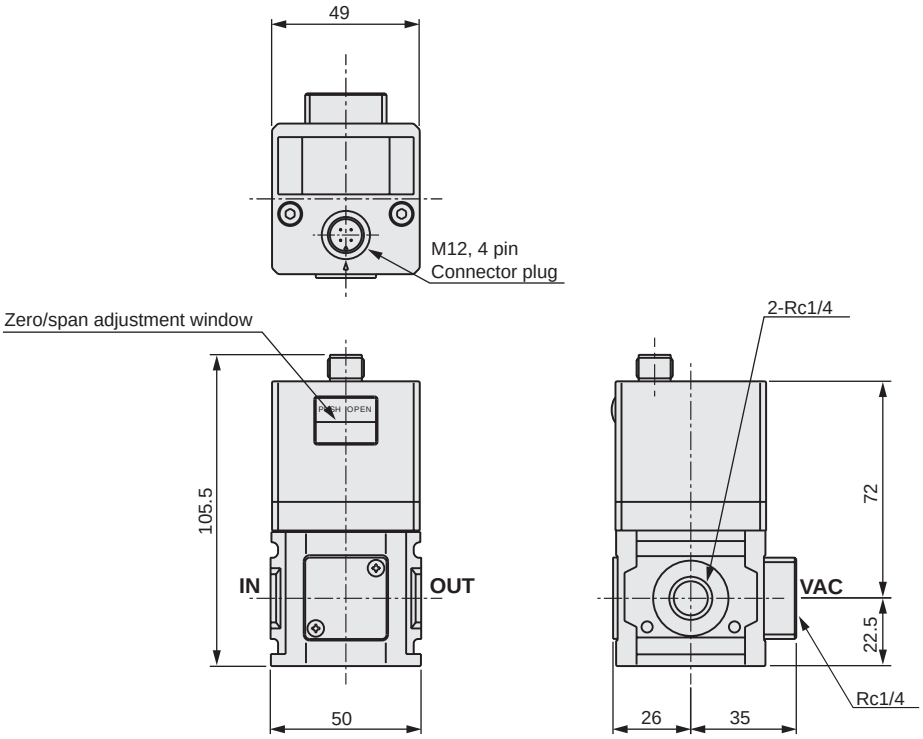

● EV2109V-P70

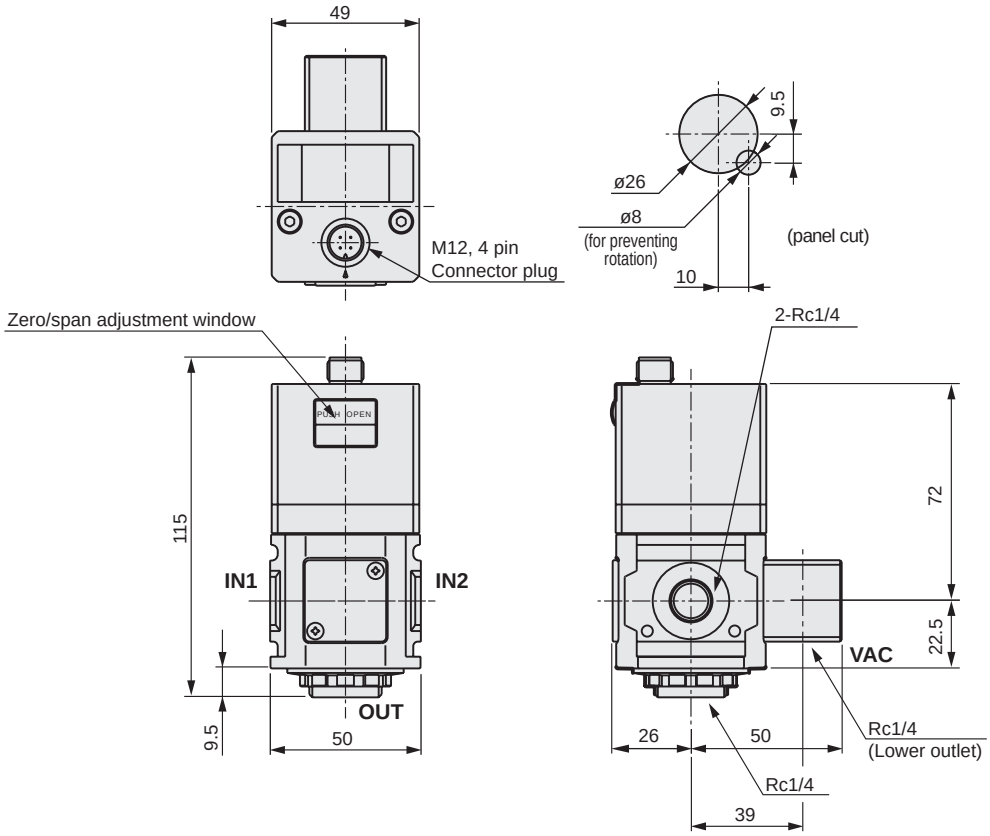

Connection

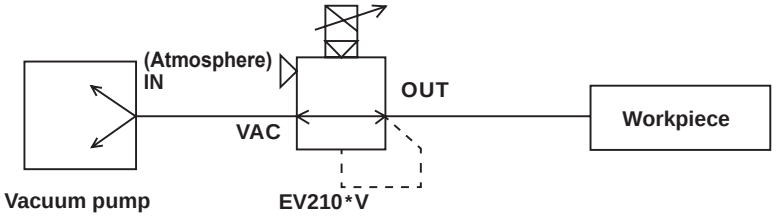

* Refer to the cautions (recommended circuit) on page 889 for details.

SCPD3
SCM
SSD2
MDC2
SMG
LCM
LCR
LCG
LCX
STM
STG
STR2
MRL2
GRC
Cylinder switch
MN3E MN4E
4GA/B
M4GA/B
MN4GA/B
F.R (module unit)
Clean F.R
Precision R
Press gauge Diff. press gauge
Electro-pneumatic R
Speed controller
Auxiliary valve
Fitting/ tube
Clean air unit
Pressure sensor
Flow rate sensor
Valve for air blow
Ending

I/O characteristics

● Input signal 0-10 VDC

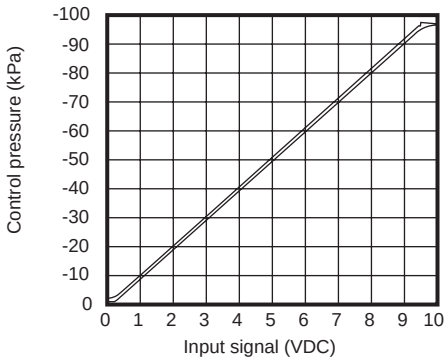

● Input signal 0-5 VDC

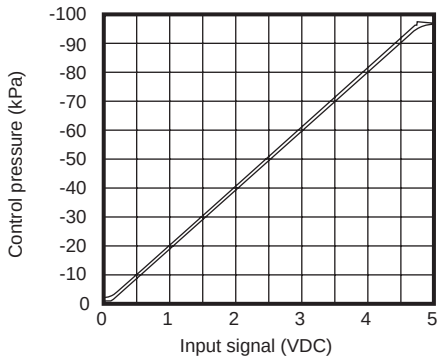

● Input signal 4-20 mADC or 1-5 VDC

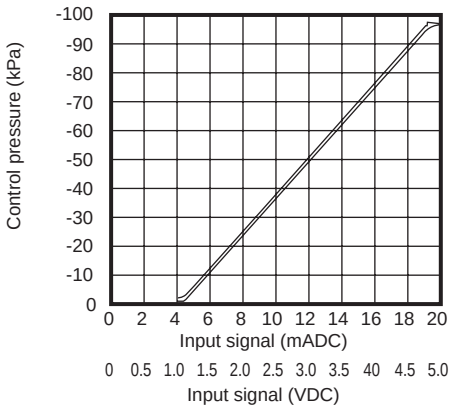

● Input signal 10 kΩ variable resistance or 0-10 VDC

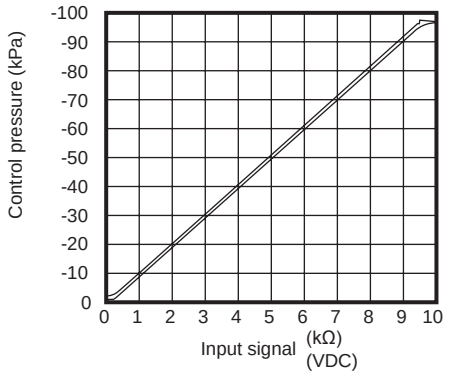

Flow characteristics

● EV2100V

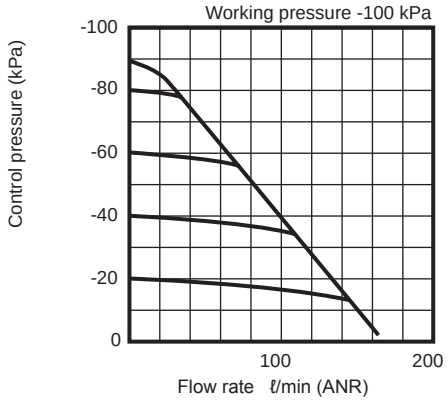

● EV2109V

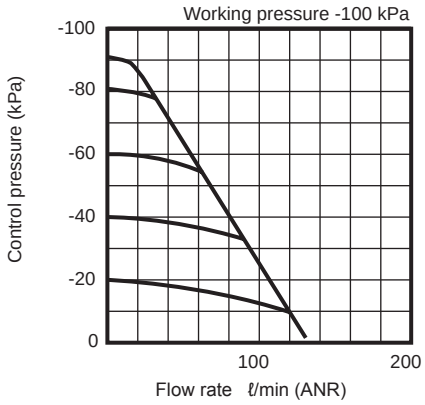

Analog output

● EV2100V, EV2109V

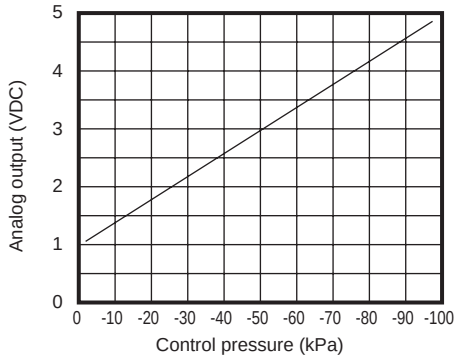

Option models

Optional embedded intake

● Standard (blank)

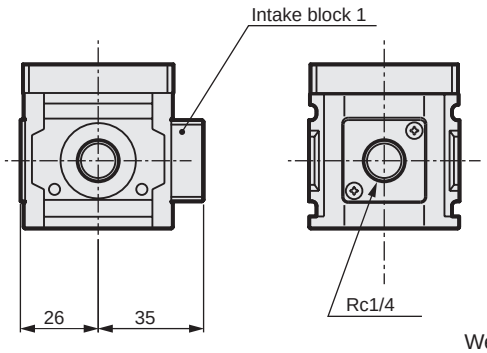

Weight: 24 g

● -K1

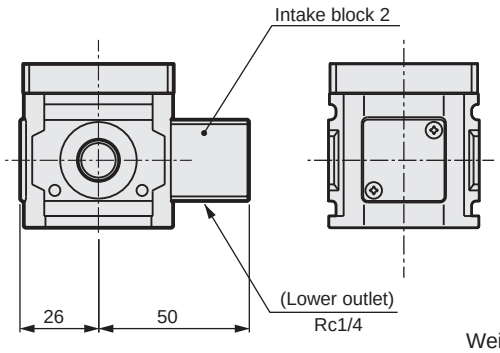

Weight: 50 g

Bracket option

● Floor mounted **-B4 (B bracket)

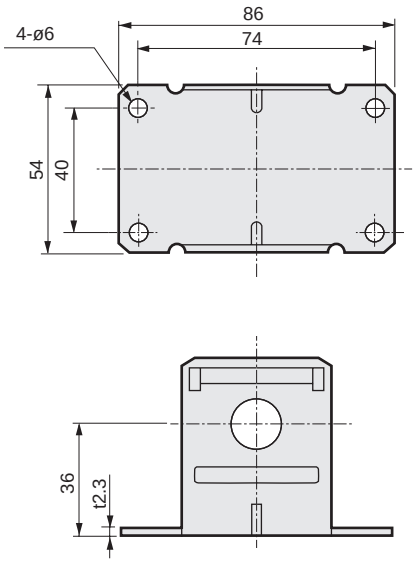

Material:
SPCC
Surface treatment:
black coating
Weight: 165 g

● Wall mounted **-T (T bracket)

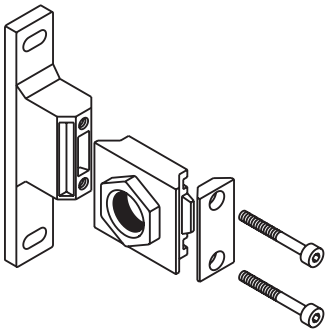

* O-ring and gasket are supplied.

Note: Refer to page 803 for dimensions of T bracket.

Weight: 135 g

Cable option

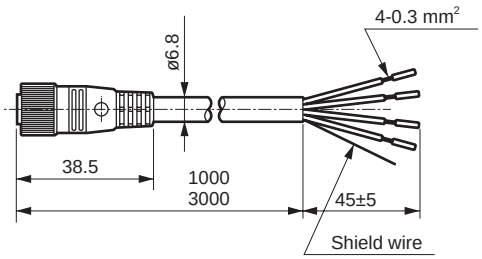

-C1* Shield/cable/connector

* Pin No.	Isolator color	Applications	Type of input signal				Weight g
			0-10 V	0-5 V	4-20 mA 1-5 V	10 kΩVR (0-10 V)	
1	Red	Power supply ⊕	24 V				C11: 79 C13: 212
2	Green	-	Analog output 1-5 V			VR input terminal	
3	Black	Common	0 V			VR input terminal 0 V	
4	White	Input signal	0-10 V	0-5 V	4-20 mA 1-5 V	VR output terminal (0-10 V)	

If a cable connector is not used, following recommended cable sockets can be used.
Anyway, use a shield wire cable.

Screw fixing	ELW1KA4012	Correns (Hirschmann)
Axial (solder)	XS2C-D421	Omron
Radial (solder)	XS2C-D422	Omron

SCPD3
SCM
SSD2
MDC2
SMG
LCM
LCR
LCG
LCX
STM
STG
STR2
MRL2
GRC
Cylinder switch
MN3E MN4E
4GA/B
M4GA/B
MN4GA/B
F.R (module unit)
Clean F.R
Precision R
Press gauge Diff. press gauge
Electro-pneumatic R
Speed controller
Auxiliary valve
Fitting/ tube
Clean air unit
Pressure sensor
Flow rate sensor
Valve for air blow
Ending

Much-awaited series in the fields of ultra precision and micro systems

Thin electro pneumatic regulator manifold
for PC control can reduce wiring.
Ideal for pressure control and fine speed cylinder control, etc.,
in semiconductor fields and precise processing fields, etc.

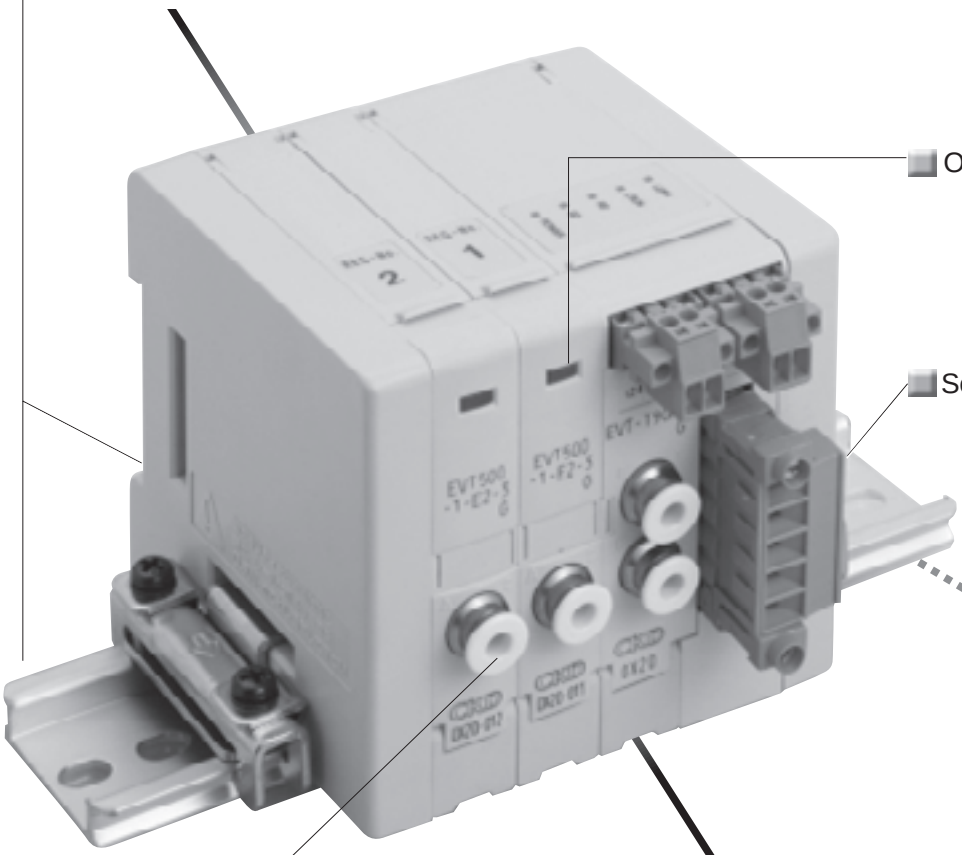

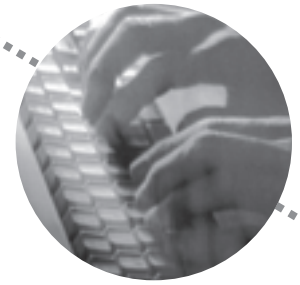

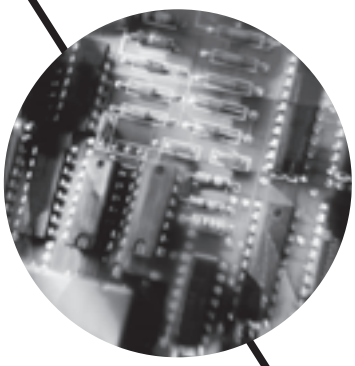

MEVT Series

Thin electro pneumatic regulator, manifold

14 mm thin and 80 g light

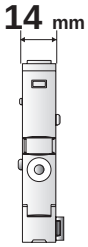

With this high integration, up to 12 manifold stations available.

Network-compatible

A serial transmission, common terminal block and D sub-connector are available for electric block.

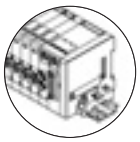

● Serial transmission

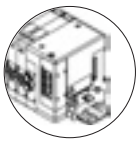

● Common terminal block

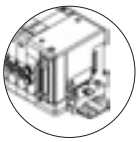

● D sub-connector

2-color display of operation status

2-color operation display (PAT.PEND). Green: pressure is within the set pressure. Red: pressure is outside the set pressure, or error.

Easy to pipe/wire

Piping and wiring have been centralized on the body front, improving workability and reducing space.

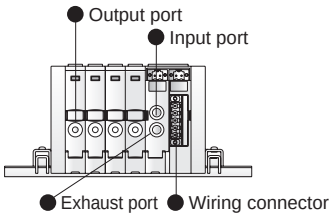

2 installation directions (PAT.PEND)

This regulator can be installed either on the bottom or on the back. The surface for mounting and work can be selected freely.

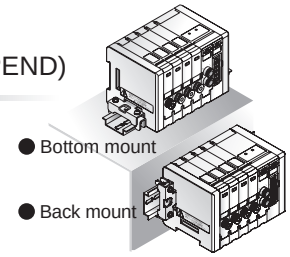

High precision/high-speed response

High precision and high speed response control of fluid pressure using electric signals. Repeatability is 0.3% F.S. and response time is 0.1 sec. (with no load) * Refer to specifications

Eco-friendly product

Material are shown on the major components to make recycling easier.

Examples

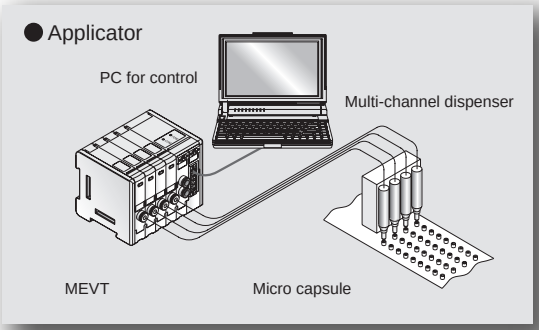

Other applications

● Fluid precise constant discharge system
- IC chip bonding
- PCB cream soldering
- PCB coating
- UV adhesive, etc.

● CMP grinder

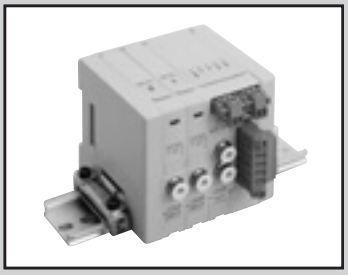

Thin electro pneumatic regulator
Reduced wiring manifold

MEVT Series

JIS symbol

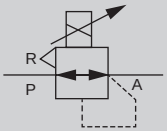

Specifications (*1)

Descriptions		EVT100	EVT500
Working fluid		Clean compressed air (JIS B 8392-1 2012: Grade 1.3.2 or equivalent)	
Max. working pressure		200 kPa	0.7 MPa
Min. working pressure		Control pressure + max. control pressure × 0.1	
Proof pressure	Inlet side	300 kPa	1.05 MPa
	Outlet side	150 kPa	0.75 MPa
Pressure control range		0 to 100 kPa	0 to 0.5 MPa
Power supply voltage		24 VDC ± 10% (stabilized power supply with ripple rate 1% or less)	
Current consumption		0.1 A or less	
Input signal (input impedance)		0 to 10 VDC (6.6 kΩ) 0 to 5 VDC (3.3 kΩ) 4 to 20 mA (250Ω)	
Analog output *2		1 to 5 VDC (load impedance 1 kΩ and over)	
Insulation resistance		100 MΩ (500 VDC) and over	
Withstand voltage		1500 VAC 1 min.	
Hysteresis *3		0.4% F.S. or less	
Linearity *3		±0.5% F.S. or less	
Resolution *3		0.1% F.S. or less	
Repeatability *3		0.3% F.S. or less	
Temperature characteristics	Zero drift	0.15% F.S./°C or less	
	Span drift	0.07% F.S./°C or less	
Max. flow rate (ANR) *4		2 ℓ/min	6 ℓ/min
Step response *5	No load	0.1 s or less	
	15 cm^3 load	0.5 s or less	
Ambient temperature		5 to 50°C	
Fluid temperature		5 to 50°C	
Operation display *6		2-color display	
Lubrication		Not available	
Mounting orientation		Free	
Atmosphere		Containing corrosive gas is not permissible	
Main dimensions		W14 × D75 × H75	
Port size		ø4, ø6 push-in fitting (selectable)	
Weight (main body)		80 g	

*1: Above characteristics are the values where power voltage is 24 ± 0.1 VDC, and measured at room temperature.
*2: Monitor output is not available for the serial transmission.
DeviceNet-compatible (T9DAR) and CC-Link-compatible (T9GAR) have pressure monitor data. (Refer to the serial transmission slave station specifications on page 881.)
*3: The condition of the values above is: 25 ± 3°C ambient temperature, no load, working pressure of the max. control pressure × 1.1 (EVT100: 110 kPa, EVT500: 0.55 MPa), and 10 to 100% control pressure.
Limited to a closed circuit in the secondary side, the pressure may fluctuate if used for blowing, etc.
*4: The value above is obtained at the max. working pressure and max. control pressure.
*5: The value above is obtained at the max. working pressure and when the step amount changes from
50% F.S. → 100% F.S.
50% F.S. → 60% F.S.
50% F.S. → 40% F.S.

Note 6: Operational indicator is just for reference, but not to assure the accuracy.

Manifold specifications

Descriptions		Electric/supply and exhaust block	
		T11R/T30R	T9DAR/T9GAR
Manifold		Block manifold	
Mounting method		DIN rail mount	
Supply and exhaust method		Common supply/common exhaust	
Max. station number		8 stations	12 stations *1
Port size	Output port (A)	ø4, ø6 push-in fitting (selectable)	
	Input (P)/exhaust (R) ports	ø4, ø6 push-in fitting (selectable)	

*1: The max. station No. per slave unit is 4 (T9DAR/T9GAR).

How to order

Manifold model No.

MEVT 500 - 0 C4 - T11R - 8 - U - 3 - P70

* Be sure to fill in the "manifold specifications" (page 886).

Discrete EVT model No.

EVT 500 - 0 C4 —— E2 ———— 3 - P70

Model No.

Ⓐ Pressure control range

Ⓑ Input control signal

Ⓒ Port size *1 *2

Ⓓ Electric/supply and exhaust block

Ⓔ Lead wire

Ⓕ Station No.

Ⓖ DIN rail mounting direction

Ⓗ Voltage

Ⓘ Clean room specifications

Code	Content
Ⓐ Pressure control range	
100	0 to 100 kPa
500	0 to 0.5 MPa

Ⓑ Input control signal

		Electric/supply and exhaust block			
		T11R	T30R	T9DAR	T9GAR
0	0 to 10 VDC	●	●		
1	0 to 5 VDC	●	●	●	●
2	4 to 20 mA	●	●		

Ⓒ Port size (output port (A))	
C4	ø4 push-in fitting
C6	ø6 push-in fitting

Ⓓ Electric/supply and exhaust block	
T11R	Common terminal block
T30R	D sub-connector
T9DAR	Serial transmission (DeviceNet 4 input points/4 output points)
T9GAR	Serial transmission (CC-Link Ver1.10 4 input points/4 output points)

Ⓔ Lead wire

		Electric/supply and exhaust block			
		T11R	T30R	T9DAR	T9GAR
E2	4P connector	●	●	●	●

Ⓕ Station No.		
1	1 station	
to		(May vary depending on reduced wiring specifications.)
12	12 stations	(Refer to the manifold specifications on page 886.)

Ⓖ DIN rail mounting direction	
U	Bottom
B	Back

Ⓗ Voltage	
3	24 VDC

	Structure
Ⓘ Clean room specifications	
P70	Exhaust treatment

⚠ Note on selection guide

*1: Specify the input (P)/exhaust (R) port sizes in the electric, supply and exhaust block section of manifold specifications.
*2: A filter is built in the input (P)/output (A) ports.

SCPD3
SCM
SSD2
MDC2
SMG
LCM
LCR
LCG
LCX
STM
STG
STR2
MRL2
GRC
Cylinder switch
MN3E MN4E
4GA/B
M4GA/B
MN4GA/B
F.R (module unit)
Clean F.R
Precision R
Press gauge Diff. press gauge
Electro-pneumatic R
Speed controller
Auxiliary valve
Fitting/ tube
Clean air unit
Pressure sensor
Flow rate sensor
Valve for air blow
Ending

MEVT components and parts list

Common terminal block

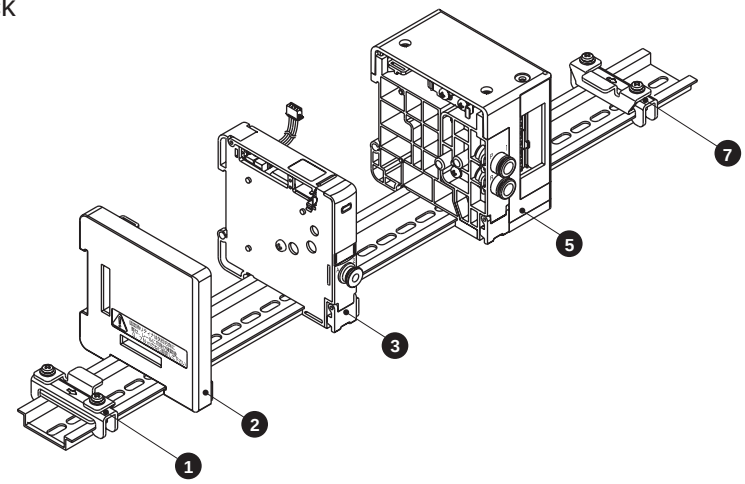

D sub-connector

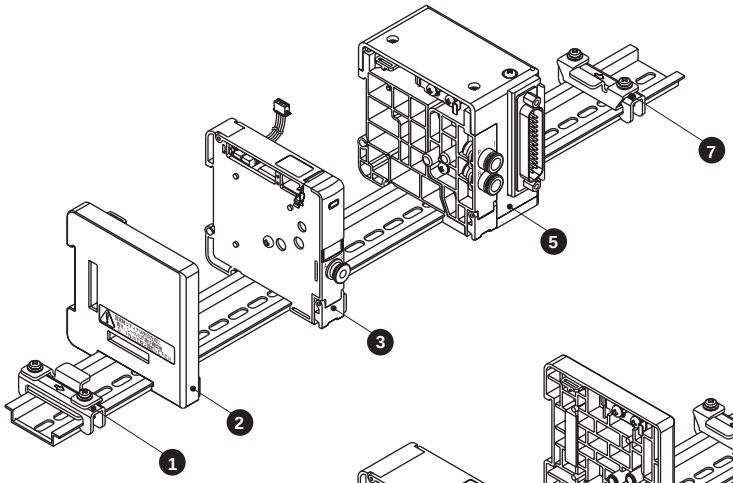

Serial transmission

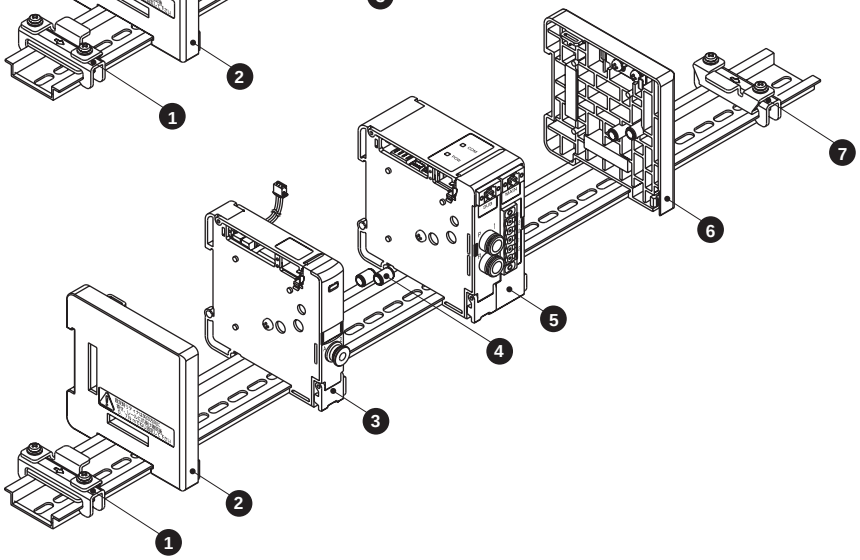

Main parts list

No.	Block component name	Model No.	No.	Block component name	Model No.
1	Retainer L	EVT-HL-P70	5	Electric/supply and exhaust block	EVT-T*-P70
2	End block L	EVT-EL-P70	6	End block R	EVT-ER-P70
3	EVT	EVT*OO-P70	7	Retainer R	EVT-HR-P70
4	Piping fitting	EVT-P-P70			

Weight

(g)

Block		Weight	Block		Weight
EVT	EVT*OO-P70	80	Electric/supply and exhaust block	T11R-P70	115
End block	EVT-EL-P70	30		T30R-P70	125
	EVT-ER-P70	30		T9*R-P70	145
			Retainer	EVT-H*-P70	25
			Piping fitting	EVT-P-P70	-

Dimensions

MEVT-P70

● Common terminal block (T11R)

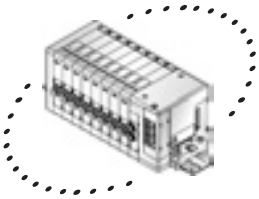

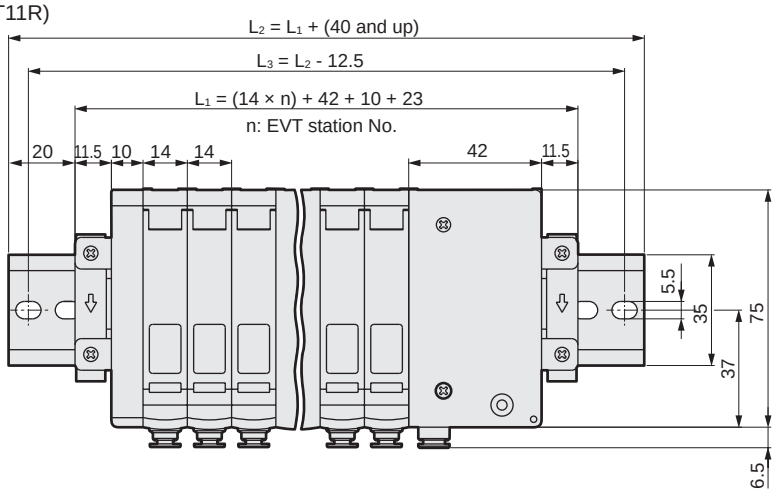

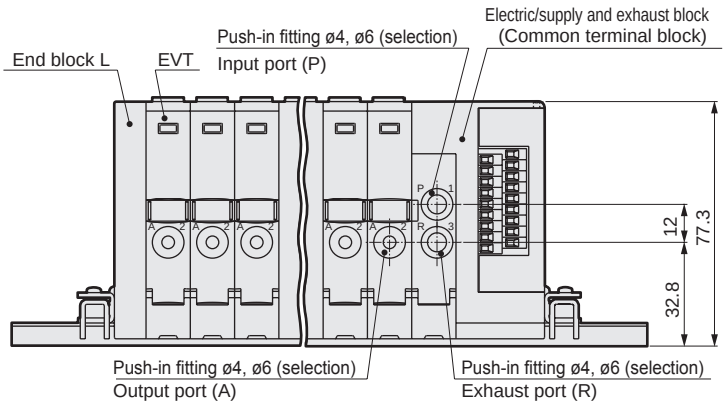

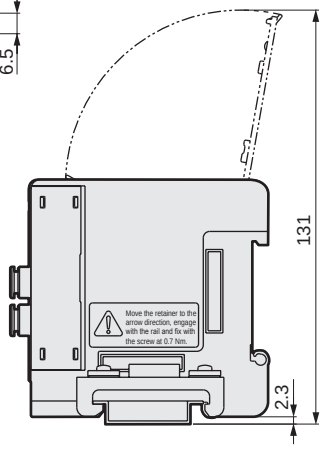

MEVT-P70

● D sub-connector (T30R)

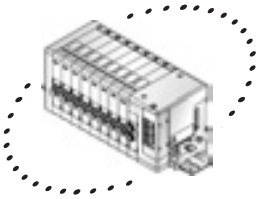

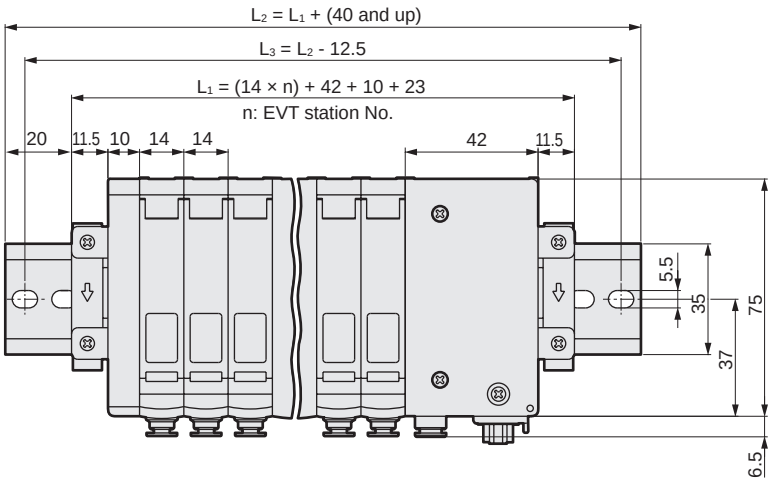

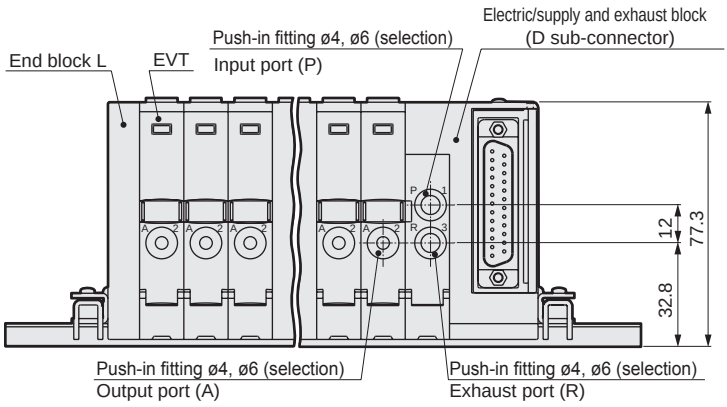

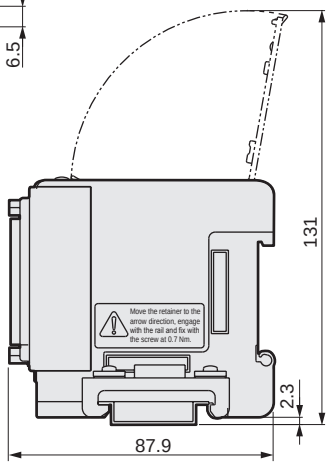

SCPD3
SCM
SSD2
MDC2
SMG
LCM
LCR
LCG
LCX
STM
STG
STR2
MRL2
GRC
Cylinder switch
MN3E MN4E
4GA/B
M4GA/B
MN4GA/B
F.R (module unit)
Clean F.R
Precision R
Press gauge Diff. press gauge
Electro-pneumatic R
Speed controller
Auxiliary valve
Fitting/ tube
Clean air unit
Pressure sensor
Flow rate sensor
Valve for air blow
Ending

Dimensions

MEVT-P70

● Serial transmission (T9*)

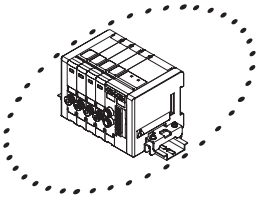

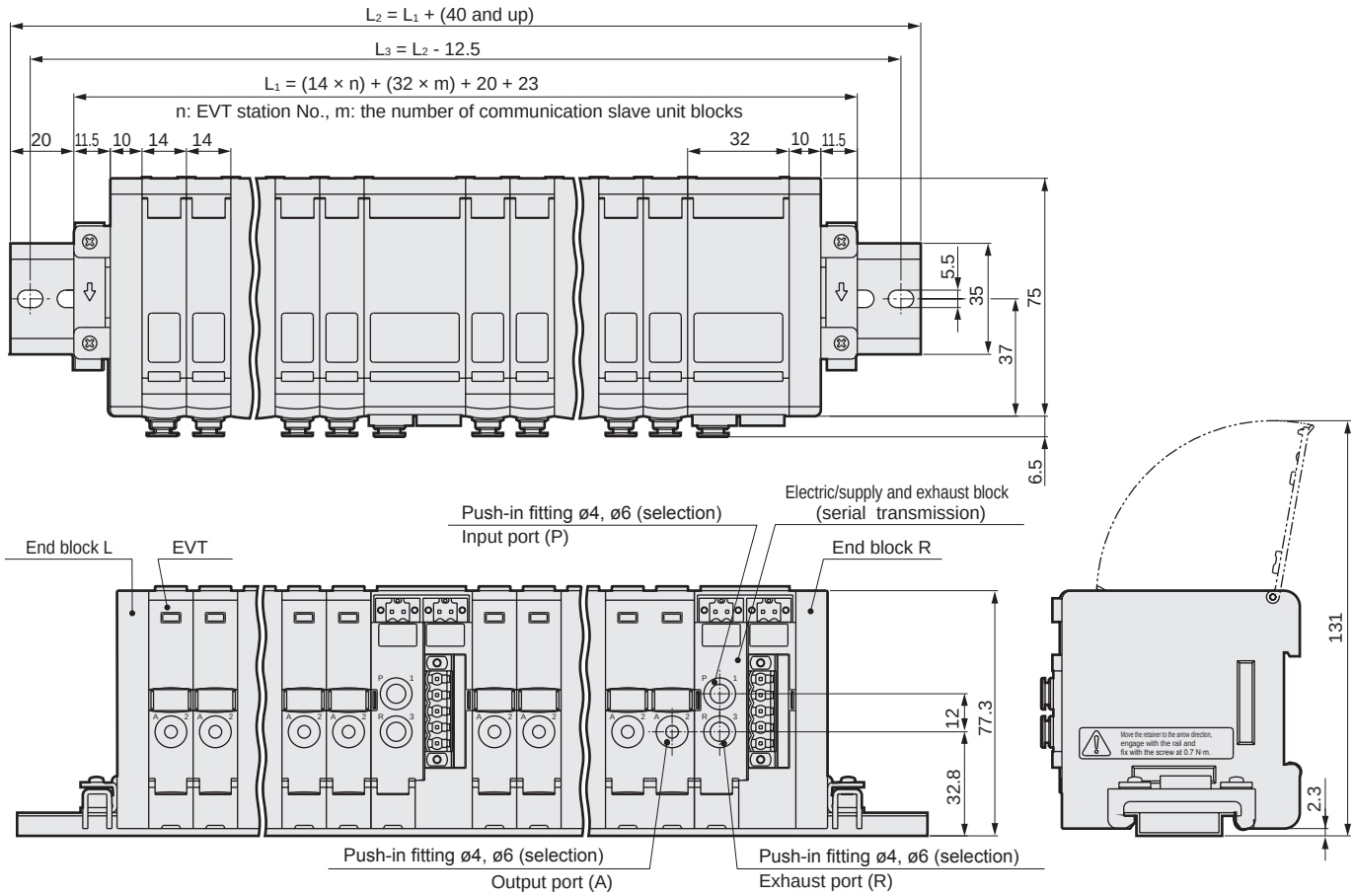

*1: The max. station No. per slave unit is 4 (T9DAR/T9GAR).

I/O characteristics

● Input signal 0-10 VDC

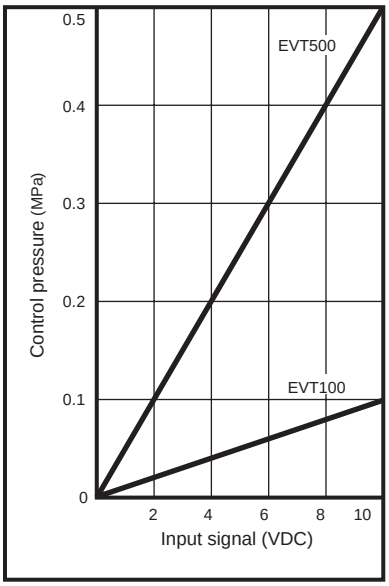

● Input signal 0-5 VDC

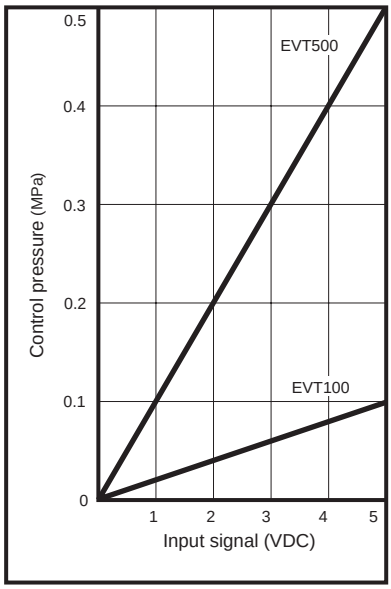

● Input signal 4-20 mA

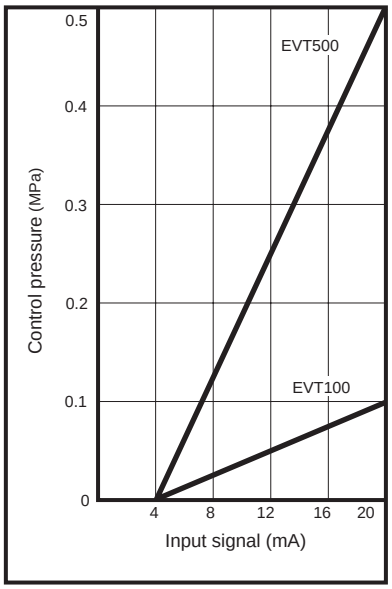

Flow characteristics

● EVT100

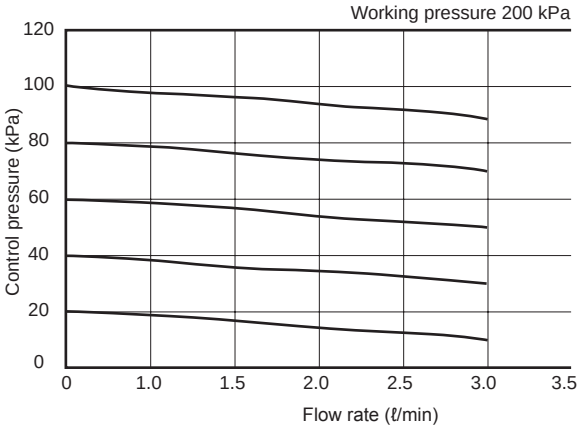

● EVT500

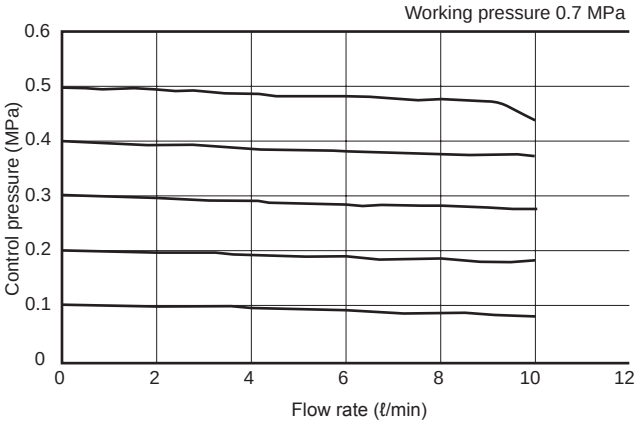

SCPD3
SCM
SSD2
MDC2
SMG
LCM
LCR
LCG
LCX
STM
STG
STR2
MRL2
GRC
Cylinder switch
MN3E MN4E
4GA/B
M4GA/B
MN4GA/B
F.R (module unit)
Clean F.R
Precision R
Press gauge Diff. press gauge
Electro-pneumatic R
Speed controller
Auxiliary valve
Fitting/ tube
Clean air unit
Pressure sensor
Flow rate sensor
Valve for air blow
Ending

MEVT: Block configurations

● EVT discrete

(1) Required station No. of EVT can be placed on DIN rail.
However, the max. station No. is limited depending on the method. (Refer to page 868.)
(2) Viewed from the fitting, nominal station No. of EVT is assigned as 1, 2, 3, ··· from right.
(3) As shown on the wiring cover of EVT, REG-No. is assigned as 1, 2, 3, per electric/supply and exhaust block from the nearest side.

● Electric/supply and exhaust block

(1) Required number can be placed onto the connecting section per block.

● End block

(1) For the serial transmission install the blocks to both sides.
(2) If common terminal block or D sub-connector install this block on the opposite face of electric/supply and exhaust block.

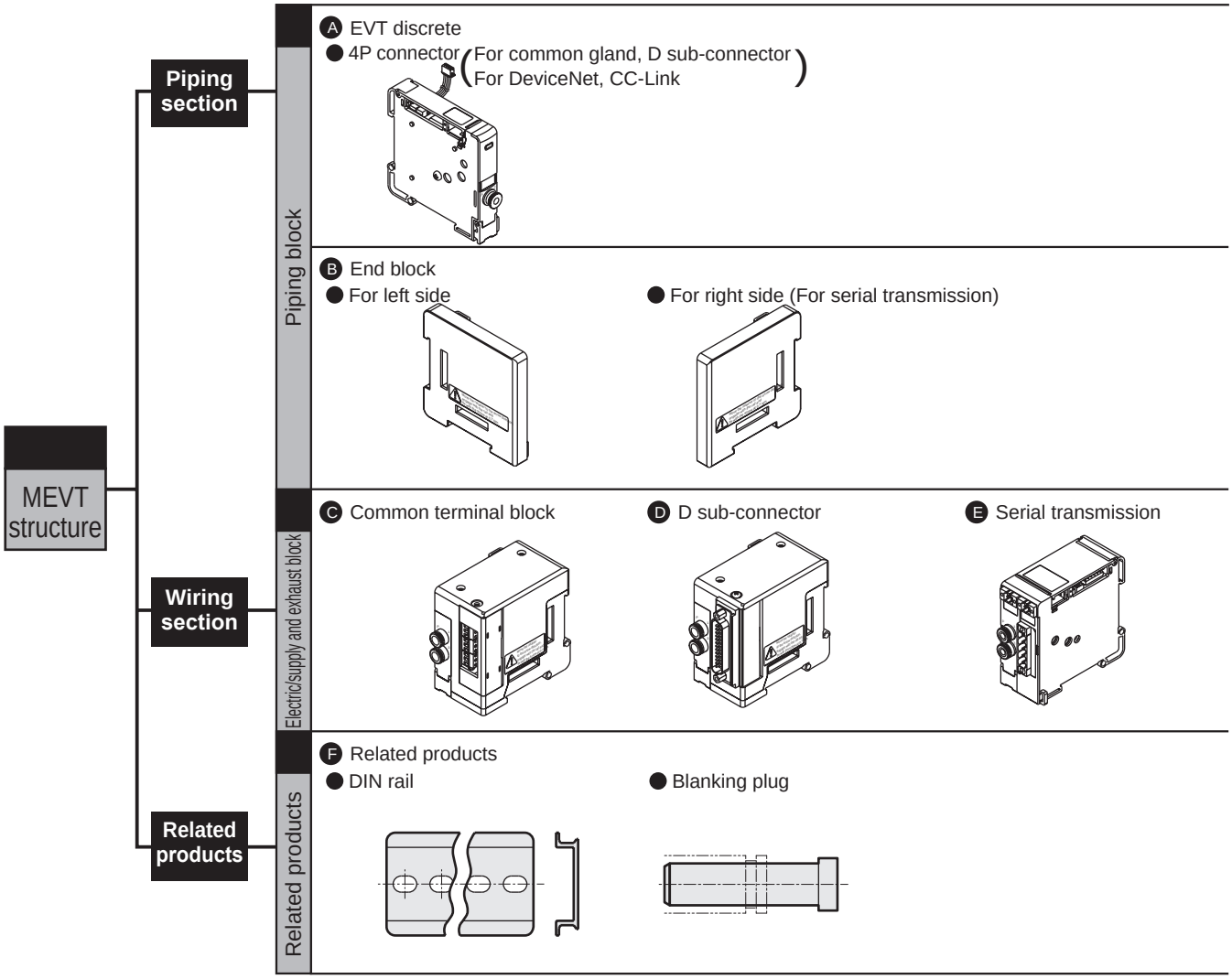

Piping section

A.EVT discrete

Refer to pages 868, 869 for selection guide.

B. End block

For the serial transmission (T9*), install the block to both ends of manifold.

When using the common terminal block (T11R) or D sub-connector (T30R), mount it only on the opposite side to the electric and supply/exhaust block (EVT-EL).

EVT - E R - P70

Model No. — Ⓐ Type — Ⓑ Mounting position — Ⓒ Clean room specifications

Ⓐ Type		Ⓑ Mounting position		Ⓒ Clean room specifications	
E	Common exhaust	L	For left side		Structure
		R	For right side (For serial transmission)	P70	Exhaust treatment

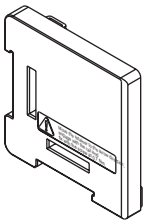

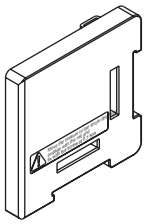

[Retainer]

Fix at both ends of manifold.

EVT - H R - P70

Model No. — Ⓐ Mounting position — Ⓑ Clean room specifications

Ⓐ Mounting position		Ⓑ Clean room specifications	
L	For left side		Structure
R	For right side	P70	Exhaust treatment

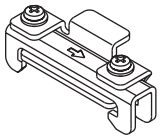

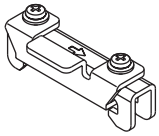

Electric/supply and exhaust block

C. Common terminal block

EVT - T11R - C6 - P70

Model No. — Type — Ⓐ Input (P)/exhaust (R) port sizes — Ⓑ Clean room specifications

Ⓐ Input (P)/exhaust (R) port sizes		Ⓑ Clean room specifications	
C4	ø4 push-in fitting		Structure
C6	ø6 push-in fitting	P70	Exhaust treatment

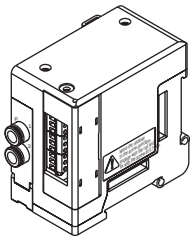

D. D sub-connector

EVT - T30R - C6 - P70

Model No. — Type — Ⓐ Input (P)/exhaust (R) port sizes — Ⓑ Clean room specifications

Ⓐ Input (P)/exhaust (R) port sizes		Ⓑ Clean room specifications	
C4	ø4 push-in fitting		Structure
C6	ø6 push-in fitting	P70	Exhaust treatment

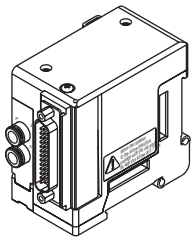

E. Serial transmission

EVT - T9DAR - C6 - P70

Model No. — Ⓐ Type — Ⓑ Input (P)/exhaust (R) port sizes — Ⓒ Clean room specifications

Ⓐ Type		Ⓑ Input (P)/exhaust (R) port sizes		Ⓒ Clean room specifications	
T9DAR	DeviceNet 4 input points/4 output points	C4	ø4 push-in fitting		Structure
T9GAR	CC-Link Ver1.10 4 input points/4 output points	C6	ø6 push-in fitting	P70	Exhaust treatment

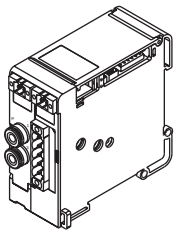

SCPD3
SCM
SSD2
MDC2
SMG
LCM
LCR
LCG
LCX
STM
STG
STR2
MRL2
GRC
Cylinder switch
MN3E MN4E
4GA/B
M4GA/B
MN4GA/B
F.R (module unit)
Clean F.R
Precision R
Press gauge Diff. press gauge
Electro-pneumatic R
Speed controller
Auxiliary valve
Fitting/ tube
Clean air unit
Pressure sensor
Flow rate sensor
Valve for air blow
Ending

Related products

DIN rail, silencer, blanking plug

● DIN rail

EVT-BAA [length] -P70

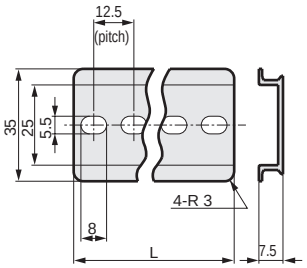

* Select [Length] from the DIN rail length selection table L_2 on page 886.

● Blanking plug

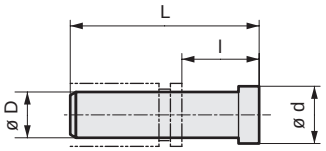

Model No.	D	L	l	d	Weight g
GWP4-B-P70	ø4	27	9	6	0.4
GWP6-B-P70	ø6	29	11	8	0.8

Common terminal block (T11R): Wiring method

Notes on wiring

[Cautions for common terminal block (T11R)]

Viewed from piping port, station No. of EVT is numbered from right. If voltage may drop depending on simultaneous communication or cable length, 4 - 20 mA of current is recommended for input signal.

Terminal box recommended screw tightening torque 0.2 N·m

Internal wiring method of T11R (up to 8 stations for EVT)

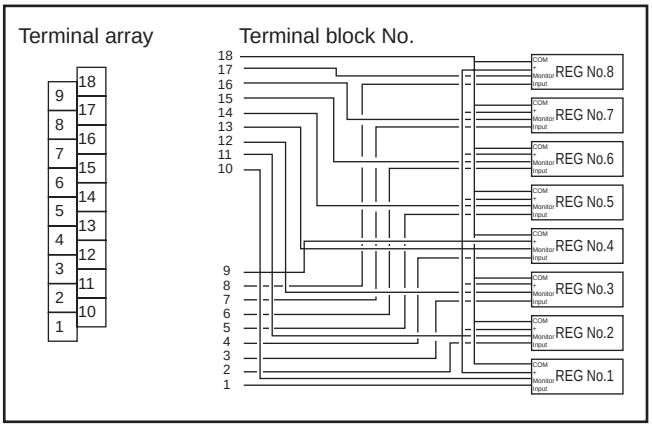

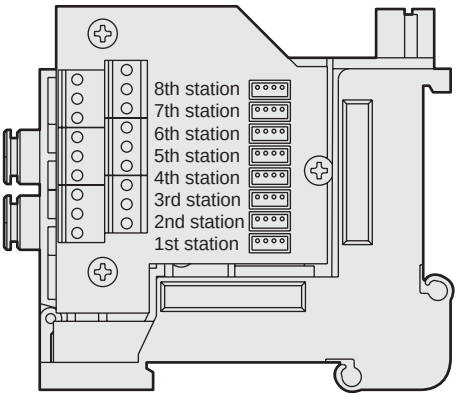

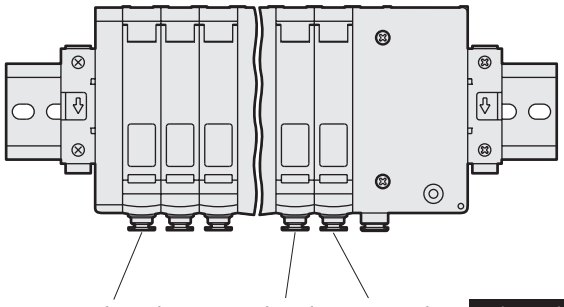

n-th station ... 2nd station 1st station Station No. of EVT

Terminal array of wiring method T11R

* Max. station No. of EVT is 8 stations.

Terminal No.

18	17	16	15	14	13	12	11	10
9	8	7	6	5	4	3	2	1

[Standard wiring]

Terminal No.	18	17	16	15	14	13	12	11	10
Terminal array	COM	Analog output 8	Analog output 7	Analog output 6	Analog output 5	Analog output 4	Analog output 3	Analog output 2	Analog output 1
Terminal No.	**9**	**8**	**7**	**6**	**5**	**4**	**3**	**2**	**1**
Terminal array	Power supply+	Input signal 8	Input signal 7	Input signal 6	Input signal 5	Input signal 4	Input signal 3	Input signal 2	Input signal 1

D sub-connector (T30R): Wiring method

D sub-connector (T30R)

A connector used for wiring method T30R is generally called as D sub-connector and widely used in FA and OA components. Especially, 25P type complying RS-232C standards is a dedicating connector widely used in PC communication board.

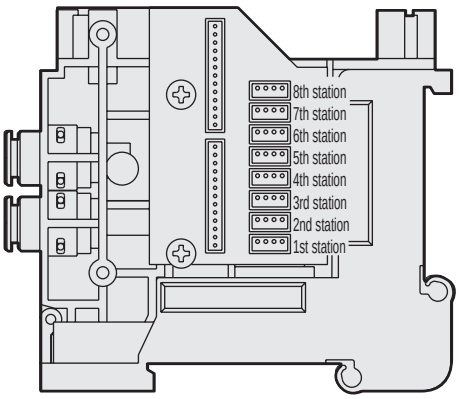

[Cautions for D sub-connector (T30R)]

Viewed from piping port, station No. of EVT is numbered from right.

If voltage may drop depending on simultaneous communication or cable length, 4 - 20 mA of current is recommended for input signal.

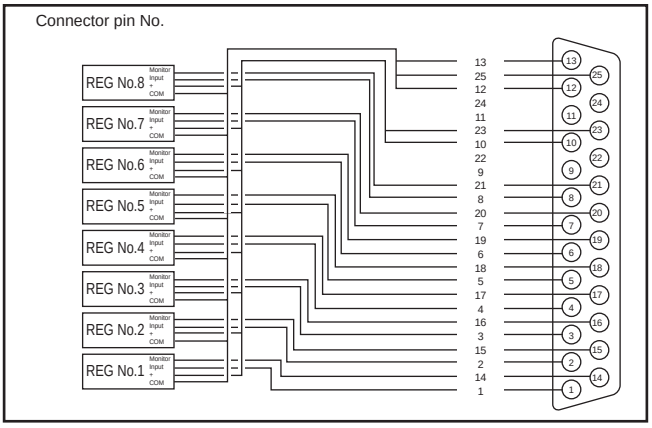

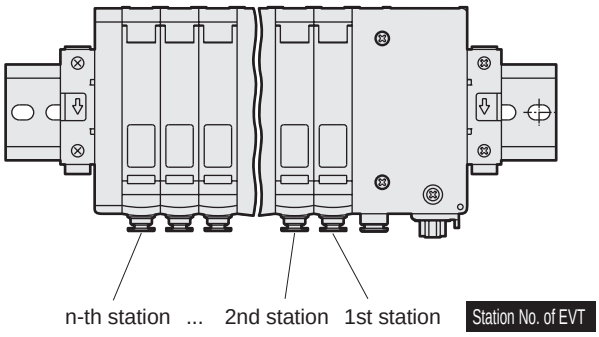

Connector pin array of wiring method T30R

* Max. station No. of EVT is 8 stations.

Pin No.	1	2	3	4	5	6	7	8	9	10	11	12	13
Pin array	Input signal 1	Input signal 2	Input signal 3	Input signal 4	Input signal 5	Input signal 6	Input signal 7	Input signal 8	(Void)	Power supply+	(Void)	COM	COM
Pin No.	**14**	**15**	**16**	**17**	**18**	**19**	**20**	**21**	**22**	**23**	**24**	**25**	
Pin array	Analog output 1	Analog output 2	Analog output 3	Analog output 4	Analog output 5	Analog output 6	Analog output 7	Analog output 8	(Void)	Power supply+	(Void)	COM	

How to order cable with D sub-connector

EVT - CABLE - D 0 0 - 5 - P70

Ⓒ Clean room specifications

Ⓐ User interface

Ⓑ Cable length

	Code	Model EVT
Ⓐ	0	Cutting only
Ⓑ	5	5 m
Ⓒ	P70	Structure: Exhaust treatment

D sub-connector pin No. and conductor

● EVT-CABLE-D00-Ⓑ

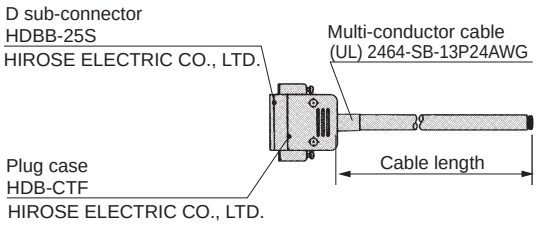

Cable length	Weight g
5 m	793

D sub-connector pin No.		1	2	3	4	5	6	7	8	9	10	11	12	13
Conductor	Insulator color	Yellow	Green	Gray	White	Yellow	Green	Gray	White	Yellow	Orange	Green	Orange	Orange
	Mark type	1 point	1 point	1 point	1 point	2 point	2 point	2 point	2 point	3 point	1 point	3 point	1 point	2 point
	Mark color	Black	Black	Black	Black	Black	Black	Black	Black	Black	Red	Black	Black	Black

D sub-connector pin No.		14	15	16	17	18	19	20	21	22	23	24	25	
Conductor	Insulator color	Yellow	Green	Gray	White	Yellow	Green	Gray	White	Yellow	Orange	Orange	Orange	
	Mark type	1 point	1 point	1 point	1 point	2 point	2 point	2 point	2 point	3 point	2 point	3 point	3 point	
	Mark color	Red	Red	Red	Red	Red	Red	Red	Red	Red	Red	Red	Black	

SCPD3
SCM
SSD2
MDC2
SMG
LCM
LCR
LCG
LCX
STM
STG
STR2
MRL2
GRC
Cylinder switch
MN3E MN4E
4GA/B
M4GA/B
MN4GA/B
F.R (module unit)
Clean F.R
Precision R
Press gauge Diff. press gauge
Electro-pneumatic R
Speed controller
Auxiliary valve
Fitting/ tube
Clean air unit
Pressure sensor
Flow rate sensor
Valve for air blow
Ending

Serial transmission (T9*): Wiring method

[Cautions for serial transmission (T9*)]

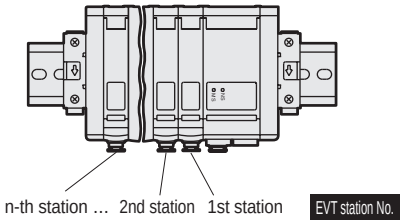

- The slave unit's output No. differs with the maker. The internal connector No. and EVT correspond as shown below.
- EVT station are set in order from the right facing the piping port.
- Since internal connectors are wired in order, if there are fewer EVT stations on the left face of the electric and supply/exhaust block than total connectors, some connectors are left open. Do not use these open connectors for drives other than EVTs in use.
- Do not remove protective connectors connected to void connectors or a failure may occur.
- The working power is 24 VDC.
- A slave unit for each communication system is used. Contact CKD for compatible PLC and host station models and communication system specifications. (Refer to page 881)
- To ensure network reliability, use the communication cable recommended for each communication system.
- Securely fix the enclosed connector with set screw.

(Refer to the right table for proper torque)

	Cable fixing screw	Connector fixing screw
Power supply connector	0.25 N·m	0.4 N·m
Communication connector	0.5 N·m	

- The SUB power supply terminal is only for crossover wiring. Use the MAIN power supply terminal when connecting a single wire. Do not allow power to be applied to both SUB and MAIN power supply terminals. Otherwise malfunction may occur.
- MAIN and SUB power terminals are connected internally. When not using the SUB power terminal, connect the enclosed connector to prevent short-circuiting.

[Wiring power cable]

When using one electrical block (electric, supply and exhaust block), connect the power cable to MAIN.
* Check power polarity.
T9DAR/T9GAR: Left 24 V, Right 0 V
: Left 0 V, Right 24 V

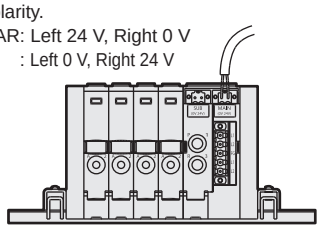

When using more than one wiring block (electric, supply and exhaust block)
Connect one power cable to the first MAIN, and then from SUB to the next MAIN.
* Check power polarity.
T9DAR/T9GAR: Left 24 V, Right 0 V
: Left 0 V, Right 24 V

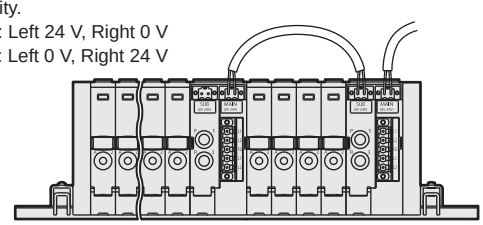

* Refer to the table below for EVT station No.

EVT max. station number

Slave unit (electric, supply and exhaust block) model No.	Communication system name	EVT max. station number		
		When using 1 slave unit	When using 2 slave unit	When using 3 slave unit
T9DAR	DeviceNet	4 units	8 units	12 units
T9GAR	CC-Link	4 units	8 units	12 units

Up to three slave units can be connected per manifold.

Correspondence of wiring method T9* channel No. and connector No.

T9DAR

Channel No. (pressure setting data)	0 (1)	1 (2)	2 (3)	3 (4)
Channel No. (pressure monitor data)	0 (1)	1 (2)	2 (3)	3 (4)
Connector No. (REG No.) (EVT station No.)	**1**	**2**	**3**	**4**

* The channel No. may be counted from "1" depending on the master.

T9GAR

Channel No. (pressure setting data)	1	2	3	4
Channel No. (pressure monitor data)	1	2	3	4
Connector No. (REG No.) (EVT station No.)	**1**	**2**	**3**	**4**

Internal connector No.

T9DAR

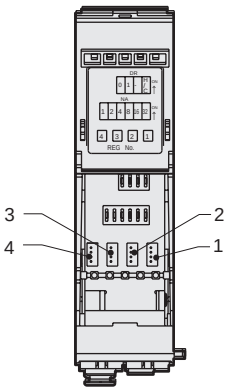

T9GAR

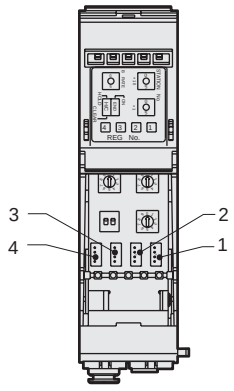

Serial transmission slave unit specifications (Refer to the table below for the applicable PLC correspondence table)

Descriptions		T9DAR	T9GAR
Communication subject		DeviceNet *1	CC-Link Ver1.10 *2
Communication speed		125 kbps/250 kbps/500 kbps	156 kbps/625 kbps/2.5 Mbps/ 5 Mbps/10 Mbps
Power supply voltage		24 VDC ± 10% *3 (Unit power supply/regulator power supply common terminal) Communication power supply (V+, V-): 11 to 25 VDC	24 VDC ± 10% *3 (Unit power supply/regulator power supply common terminal)
Current consumption		60 mA or less Load current is not included Communication power supply (V+, V-): 50 mA or less	80 mA or less Load current is not included
Max. output No. (DA output)		4 point	
Max. input No. (AD input)		4 point	
DA output	Pressure setting data	12 bit	
	Accuracy *4	±1% F.S. or less	
AD input	Pressure monitor data	12 bit	
	Accuracy *5	±6% F.S. or less	
Occupied		Occupied output memory: 2 × n (byte) *6 Occupied input memory: 2 × n (byte) *6	Occupied unit No.: 1 station (Remote device station)

*1 Contact CKD for EDS file.
*2 Contact CKD for profile.
*3 To secure output accuracy, use safety power supply with 1% or less of ripple ratio.
*4 DA output accuracy does not include EVT accuracy.
*5 AD input accuracy includes EVT monitor accuracy.
*6 The slave unit's memory occupied by the PLC is determined by the number of EVT units (n) connected when the slave unit's power is turned ON. (Note that if no units are connected, the memory for four units is occupied)

Compatible PLC table

Model No.	Manufacturer name (recommended body)	Series	Communication system name	Host station model No.
T9DAR	ODVA	DeviceNet compatible PLCs, computers and SBCs of various manufacturers	DeviceNet	Connected to the masters compatible with the manufacturers' DeviceNet systems
	OMRON	SYSMAC CS Series SYSMAC CJ Series SYSMAC CV Series SYSMAC α Series SYSMAC C200HS Series Others	DeviceNet (CompoBus/D)	CS1W-DRM21-V1 CJ1W-DRM21 CVM1-DRM21-V1 C200HW-DRM21-V1 ITNC-EI□01-DRM (PLC with master) 3G8B3-DRM21 (VME board) Other DeviceNet compatible masters
	TOYODA	PC3J/2J Series PC3JD PC2F/PC2FS	DeviceNet (DLNK)	THK-5398 TIC-5642 (master integrated PLC) TFU-5359 Other DeviceNet compatible masters
T9GAR	CLPA	CC-Link compatible PLCs, computers and SBCs of various manufacturers	CC-Link	Connected to the masters compatible with the manufacturers' CC-Link
	MITSUBISHI	MELSEC A Series MELSEC QnA Series MELSEC Q Series Others	CC-Link	AJ61BT11 AJ61QBT11 A1SJ61BT11 A1SJ61QBT11 QJ61BT11 A80BD-J61BT11 (for PCI bus) Other CC-Link compatible masters

Model No.	LED display	Wiring and setting method

T9DAR

☐ NS
☐ MS

LED name	Display description
NS	Displays network status
MS	Displays slave unit's status

Wiring method

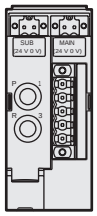

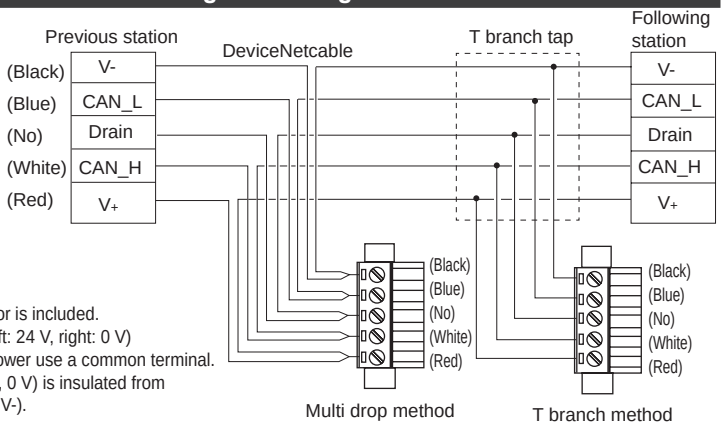

The wiring section connector is included.
Check power's polarity. (Left: 24 V, right: 0 V)
Unit power and regulator power use a common terminal.
The power connector (24 V, 0 V) is insulated from communication power (V+, V-).

How to set

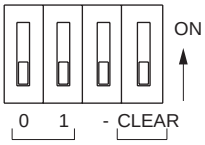

Set the communication speed.

Set output status if a communication error occurs.

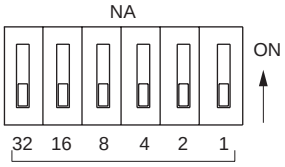

Set the slave unit address.

Communication speed	0	1
125 kbps	OFF	OFF
250 kbps	ON	OFF
500 kbps	OFF	ON
Setting not available	ON	ON

HOLD/CLEAR setting

◆ HOLD
If a communication error occurs, the status of output is held in the state just before the error occurred. (Only for set addresses)
Note: Output may not be held depending on the state of the error.

◆ CLEAR
If a communication error occurs, all channels are turned OFF (0 data output to EVT). (Only for set addresses)

Caution

- Output to EVT is output simultaneously for all channels.
- Refer to the slave unit specifications for details on occupied memory.
- Contact CKD for information on EDS file.

T9GAR

☐ LERR
☐ LRUN
☐ RD
☐ SD
☐ POWER

LED name	Display description
LERR	Lights when transmission error occurs. Turns off when the time limit is exceeded. Lights when station No. setting or transmission speed setting is incorrect. Blinks when station No. setting or transmission speed setting changes midway.
LRUN	Turns on when accurate data is received, and turns off when the time limit is exceeded. (Lights when correct data is received.)
RD	Turns on when receiving data.
SD	Turns on when sending data.
POWER	Lights when power is ON.

Wiring method

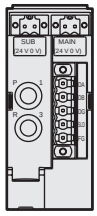

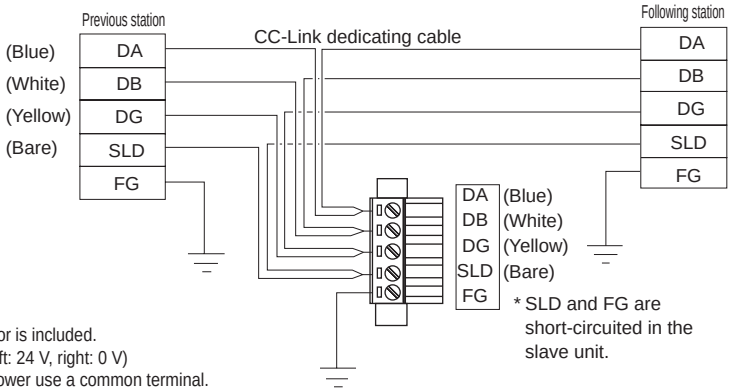

The wiring section connector is included.
Check power's polarity. (Left: 24 V, right: 0 V)
Unit power and regulator power use a common terminal.

How to set

Set the transmission speed.

0: 156 kbps 3: 5 Mbps
1: 625 kbps 4: 10 Mbps
2: 2.5 Mbps 5 and over: Not used

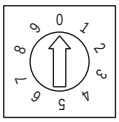

B RATE

Set the slave unit's station No. (1st place)

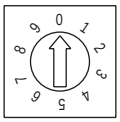

STATION No. (× 1)

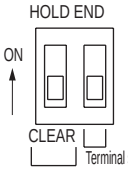

Set output status if a communication error occurs.

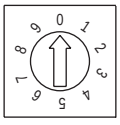

STATION No. (× 10)

Set the slave unit's station No. (tens place)

HOLD/CLEAR setting

◆HOLD
- When the "analog output enabling signal" flag turns OFF, output of the corresponding channel is held in the status just before the flag turned OFF.
- If a communication error occurs, the status of all channels' outputs are held in the state just before the error occurred. (Only for set addresses)
  Note: Output may not be held depending on the state of the error.

◆CLEAR
- When the "analog output enabling signal" flag turns OFF, output of the corresponding channel is turned OFF (0 data output to EVT).
- If a communication error occurs, all channels are turned OFF (0 data output to EVT). (Only for set addresses)

Terminal station setting

This product has a 110 Ω terminator between DA and DB communication lines. The terminal station is set by turning the terminal station setting switch ON. A terminator need not be connected to this product's connector.

[CAUTION]
Be sure to turn the terminal station setting switch off when this product is the terminal station and a CC-Link-dedicated cable (CC-Link dedicated high performance cable (Kurashige Denko FANCSBH)) requiring a terminal resistance other than 110 Ω is used for the communication cable. This also applies when the terminator's connection differs due to the T-branch connection. Connect a commercially available terminator or the one included with the master station to this product's connector based on connection conditions (specifications). Insulate this terminator.

Caution

- Output to EVT is output simultaneously for all channels.
- Contact CKD for profile.

MEMO

SCPD3
SCM
SSD2
MDC2
SMG
LCM
LCR
LCG
LCX
STM
STG
STR2
MRL2
GRC
Cylinder switch
MN3E MN4E
4GA/B
M4GA/B
MN4GA/B
F.R (module unit)
Clean F.R
Precision R
Press gauge Diff. press gauge
Electro-pneumatic R
Speed controller
Auxiliary valve
Fitting/ tube
Clean air unit
Pressure sensor
Flow rate sensor
Valve for air blow
Ending

MEVT deal drawing

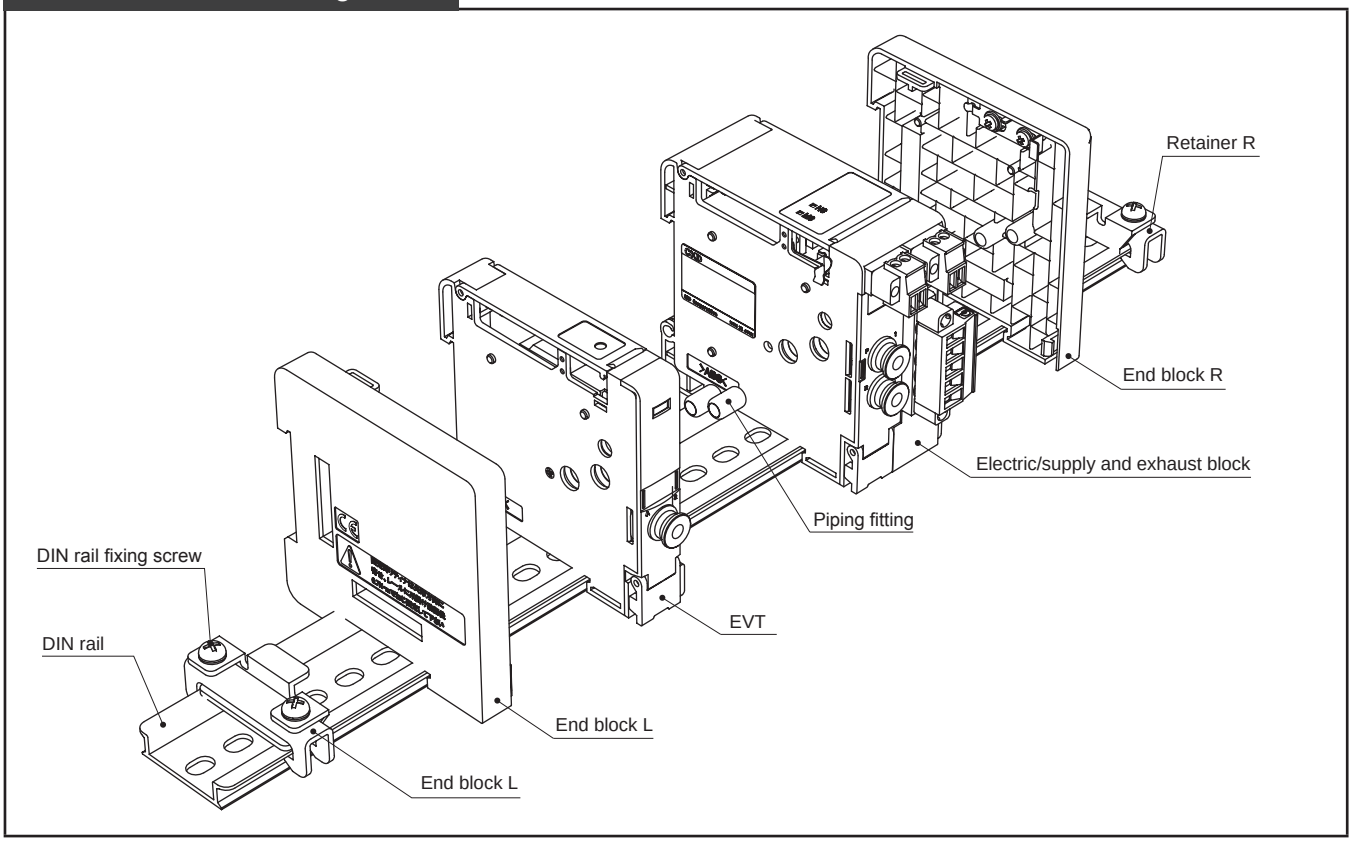

Increasing and reducing the EVT stations

1. Loosen the retainer's DIN rail set screw Ⓐ.
2. Open the EVT wiring cover Ⓑ.
3. When using the common terminal block or D sub-connector, slide end hook R Ⓔ and release the hook. Next, loosen and remove screws on the electric cover. In case of the serial transmission, open the wiring cover Ⓒ. (In case of the common terminal block, check that the wiring cover Ⓓ does not catch the terminal block.)

Common terminal block (T11R)	D sub-connector (T30R)	Serial transmission (T9*)

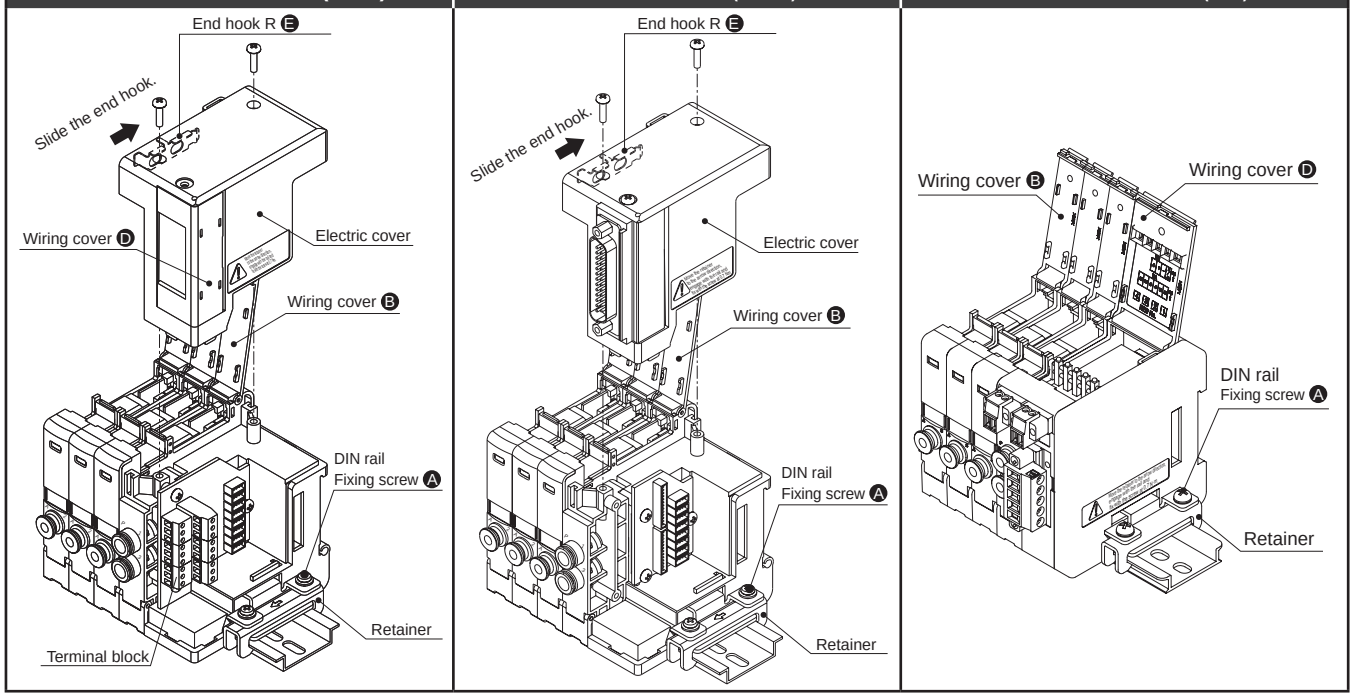

4. Remove the connecting hook spring Ⓕ and connecting hook plate Ⓖ where the manifold is to be increased, and remove the connection between blocks.
5. Separate blocks to be expanded.

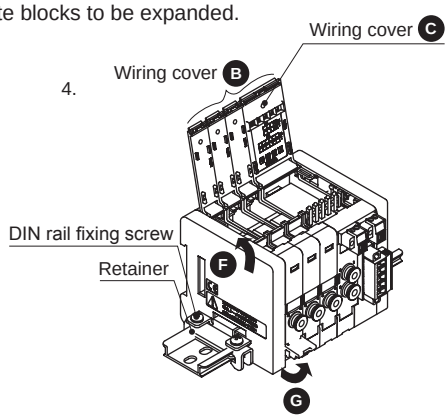

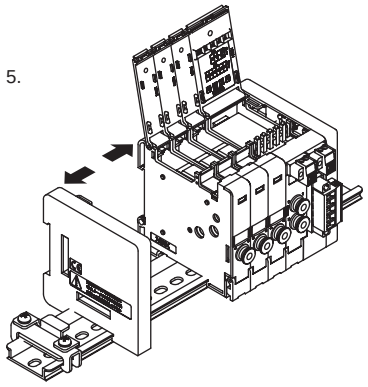

6. Insert two piping fittings Ⓗ into the input (P) and exhaust (R) ports at the separated section.
(Note: At the separated section, 2 piping fittings Ⓗ protrude from each side (4 fittings in all)).

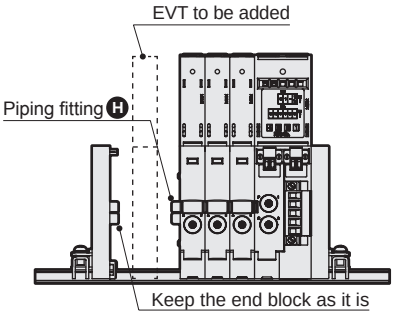

7. Mount the EVT to be added to DIN rail.

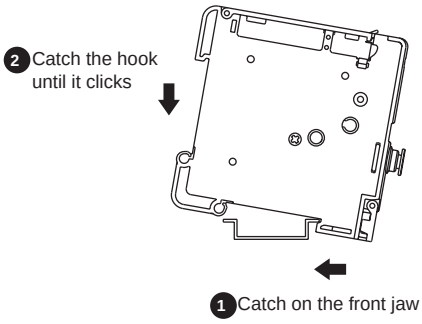

8. Press so that there is no gap between blocks, and close the connecting hook spring Ⓕ and connecting hook plate Ⓖ to connect blocks.
9. Insert the signal wires of the added EVT to the internal connectors in the electric, supply and exhaust block.
10. For serial transmission, close the wiring cover Ⓒ. When using the common terminal block or D sub-connector, fit the electric cover on, fix it in place with screws, and return the end hook R Ⓔ to the original position.
(tightening torque: 0.35 to 0.5 N·m)
11. Close wiring cover Ⓑ while taking care not to catch signal wires.
12.(1) Catch the retainer jaws onto the DIN rail.
(2) Press so that there is no gap between blocks.
(3) Press the retainer in the direction of arrow.
(4) Tighten DIN rail set screw Ⓐ.
(Recommended tightening torque: 0.6 to 0.8 N·m)

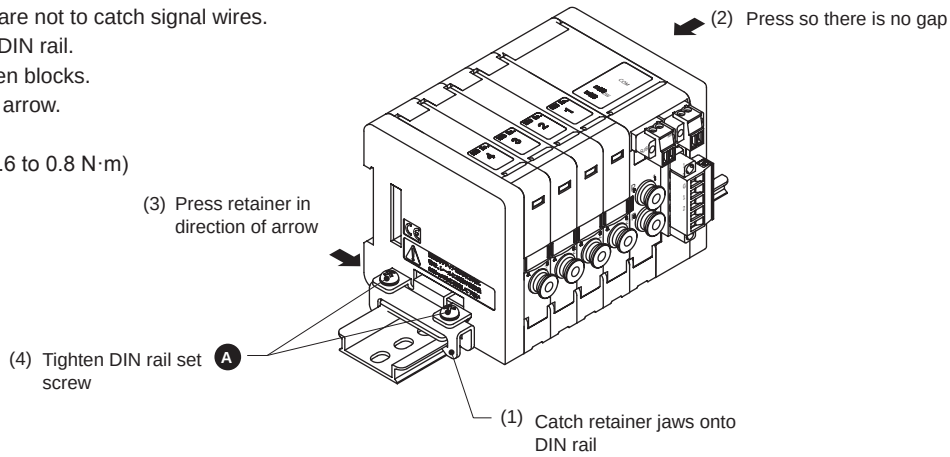

MEVT How to fill manifold specifications sheet (Ver. 2)

● Example of manifold model No.

MEVT 500 - 1 C4 - T9DAR - 12 - U - 3 - P70

Model No. Ⓐ Pressure control range Ⓑ Input control signal Ⓒ Port size Ⓓ Electric/supply and exhaust block Ⓕ Station No. Ⓖ DIN rail mounting direction Ⓗ Voltage Ⓘ Clean room specifications

Part name	Model No.	1	2	3	4	5	6	7	8	9	10	11	12	13	14	15	16	17	18	19	20	21	22	23	24	25	26	27	28	29	30	31	Quantity
EVT	EVT 500 - 0 C4 - P70		○	○	○	○		○	○	○	○		○	○	○	○																	12
	EVT - - P70																																
	EVT - - P70																																
	EVT - - P70																																
	EVT - - P70																																
Electric/supply and exhaust block	EVT-T 9DA R- C4						○					○					○																3
End block	EVT-EL-P70 (for left side)	○																															1
	EVT-ER-P70 (for right side)																	○															1
DIN rail	L_2 =	Accessories	Blanking plug											Silencer																			
			GWP4-B		GWP6-B									SLW-H6																			

*1 DIN rail length (L_2)

(1) Find DIN rail length by the calculation shown below.
The obtained length is standard.

(2) For standard length, length (L_2) is not required on the specification sheet.
Indicate the length when using a non-standard length.
Select the length based on the following DIN rail length setting table L_2.

● How to calculate length of DIN rail

Manifold length (L_1) = $\overset{\text{EVT}}{(A \times n)} + \overset{\text{Electric / supply and exhaust block}}{(B \times m)} + \overset{\text{End block}}{(C \times l)} + \overset{\text{Retainer}}{D \times 2}$

DIN rail length (L_2) = L2' × 12.5

$$L_2' : \frac{L_1 + 40}{12.5} \rightarrow \text{Round up to integer}$$

DIN rail mounting pitch (L_3) = L_2 - 12.5

*2 Multiple combinations between the serial transmission

Multiple serial transmission types can be made and installed on the same DIN rail. (Max. station No.: 12 (T9DAR/T9GAR))

Install EVT or end block next to serial transmission slave unit.

Indicate the combination on the specification sheet.

Example) EVT: 12 stations, electric, supply and exhaust block T9DAR: 4 units × 3

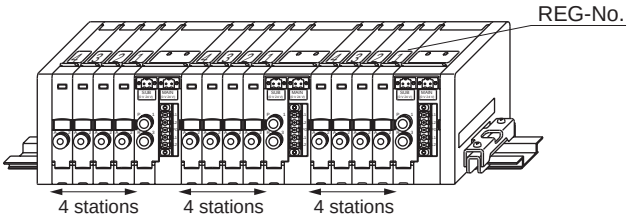

[Note]

- Viewed from piping port, layout position is assigned from left.
- Refer to the block components (pages 874 to 876) and select the model No.
- Allocation numbers 1 to 31 on the table above are for reference. As shown on the wiring cover of EVT, REG-No. is assigned as 1, 2, 3, ··· per electric/supply and exhaust block from the nearest side.

n, m and l show usage per block.
n: EVT m: Electric/supply and exhaust block l: End block
A/B/C/D indicates length (width) per block.

			Block width (mm)
A	EVT		14
B	Electric/ supply and exhaust block	T11R	42
		T30R	42
		T9*	32
C	End block		10
D	Retainer		11.5

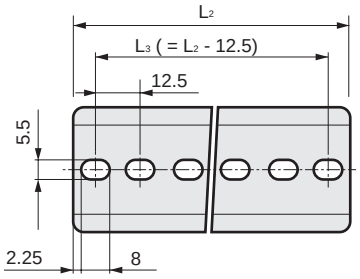

● DIN rail length setting table

L_1 ·· Manifold length	97.5 or less	Over 97.5 to 110 or less	110 to 122.5	122.5 to 135	135 to 147.5	147.5 to 160	160 to 172.5	172.5 to 185	185 to 197.5	197.5 to 210	210 to 222.5	222.5 to 235	235 to 247.5	247.5 to 260	260 to 272.5	272.5 to 285	285 to 297.5	297.5 to 310	310 to 322.5	322.5 to 335	335 to 347.5	347.5 to 360	360 to 372.5	372.5 to 385	385 to 397.5	397.5 to 410	410 to 422.5	422.5 to 435	435 to 477.5
L_2 ·· Rail length	137.5	150	162.5	175	187.5	200	212.5	225	237.5	250	262.5	275	287.5	300	312.5	325	337.5	350	362.5	375	387.5	400	412.5	425	437.5	450	462.5	475	487.5
Pitch L_3	125	137.5	150	162.5	175	187.5	200	212.5	225	237.5	250	262.5	275	287.5	300	312.5	325	337.5	350	362.5	375	387.5	400	412.5	425	437.5	450	462.5	475

Note 1: When L_1 exceeds this table range, calculate according to "How to calculate DIN rail length".

MEVT manifold specifications (Ver. 2)

● Manifold model No.

MEVT ☐ - ☐ ☐ - ☐ - ☐ - ☐ - ☐ - **P70**

Model No. Ⓐ Pressure control range Ⓑ Input control signal Ⓒ Port size Ⓓ Electric/supply and exhaust block Ⓕ Station No. Ⓖ DIN rail mounting direction Ⓗ Voltage Ⓘ Clean room specifications

Part name	Model No.	Layout position 1	2	3	4	5	6	7	8	9	10	11	12	13	14	15	16	17	18	19	20	21	22	23	24	25	26	27	28	29	30	31	Quantity
EVT	**EVT** ☐-☐ ☐																																
	EVT ☐-☐ ☐																																
	EVT ☐-☐ ☐																																
	EVT ☐-☐ ☐																																
	EVT ☐-☐ ☐																																
Electric / supply and exhaust block	**EVT-T** ☐ **R-** ☐																																
End block	**EVT-EL** (for left side)																																
	EVT-ER (for right side)																																
DIN rail	L_2 = ☐	Accessories	Blanking plug											Silencer																			
			GWP4-B				**GWP6-B**							**SLW-H6**																			

・Viewed from piping port, arrange positions from left.
・REG-No. indicated on EVT wiring cover is counted as 1, 2, 3, …from the nearest EVT for each electric and supply/exhaust block.
・Install electric/supply and exhaust block to right face of EVT.
Serial transmission allows left installation. Contact CKD.

Safety Precautions

Always read this section before use.

Electro-pneumatic regulator

Design & selection

CAUTION

- Response time is affected by working pressure and load volume. Also fluctuation of the working pressure affects the secondary side control pressure. If reproducibility with stable responsiveness is required, install a regulator in the proceeding stage.
- Take the following countermeasures to prevent malfunction caused by noise.
  - Insert a line filter in the AC power supply line.
  - Use a surge suppressor, such as CR or diode on the inductive load (solenoid valve, relay, etc.) and remove noise when generated.
  - Separate wiring to proportional pressure controls from strong magnetic fields.
  - Connect wiring to proportional pressure controls with a shield wire.
  - Ground the shield wire on the power supply side. Note that the shield wire for the serial transmission communication cable must be treated based on communication specifications.
- When releasing secondary control pressure, such as an air blowing, to the atmosphere, pressure could fluctuate depending on piping conditions and flow conditions. Test the product under actual working conditions, or contact CKD before using this method.
- When selecting dryer, air filter, oil mist filter or regulator, select a device with a flow rate higher than that used by proportional pressure controls.
- This product has moving parts due to its operation and structure, and the accuracy, etc., can change over time. Before use, evaluate the part in the system. Depending on the operation frequency, use this product as a periodic maintenance part, etc.
- CE-compliance working conditions
  CKD electro pneumatic regulators (EV and MEVT Series) are conforming to the EMC Directive and CE standard. The standard for the immunity for industrial environments applied to this product is EN61000-6-2; the following requirements must be satisfied in order to conform to this standard:
  Conditions
  - The assessment of this product is performed by using a cable pairing a power supply line and a signal line, treating this cable as a signal line.
  - This product is not equipped with surge protection. Implement surge protection measures on the system side.

Mounting / Installation / adjustment

CAUTION

- Do not use the product where the product is exposed to direct sunlight or may come in contact with water or oil.
- Sufficiently flush air pipes before connecting to proportional pressure controls.
  Prevent pipe from catching tips of sealing tape when piping.
- Mount the product as indicated in the individual precautions.
- When connecting pipes, wrap sealing tape in the opposite direction from threads starting 2 mm inside from the end of piping threads.

- If sealing tape protrudes from pipe threads, it could be cut when screwed in. This could cause the tape to enter the pneumatic components and lead to faults.

- Correct pressure control is not possible if the exhaust port is plugged. Release this port to the atmosphere.
- Use proper torque to tighten the pipes when connecting them.
  - To prevent air leak and to protect threads from damage.
  - First tighten the screw by hand to prevent threads, then use a tool.

(Recommended tightening torque)

Port thread	Tightening torque N·m
M5	1 to 1.5
Rc1/4	6 to 8
Rc3/8	13 to 15

- Open the package in a clean room.
  - The products are wrapped in an antistatic sheet before packaged in a box. If you install the product in a clean room, we recommend you to take it out of the box outside the clean room before you bring it in and to open the package in the clean room.
- Tighten with an appropriate torque when using CKD cable option M12 connector. Recommended tightening torque: 0.4 to 0.49 N·m

During use & maintenance

CAUTION

- Do not disassemble the product. Doing so may cause product failure. Operation after disassembly cannot be guaranteed.
- Do not use with the cover and housing removed.
  - An electronic board is assembled inside. Using the product with the cover or housing removed could result in unexpected accidents or trouble.

EV210*V Series for vacuum control

Design & selection

⚠ WARNING

- If the product is left with working pressure (vacuum source pressure) applied when power is OFF, the secondary pressure degree of vacuum could rise to the working pressure. If this poses a safety hazard, take measures using a valve on the secondary side, etc.

⚠ CAUTION

- If poor quality air is supplied to the primary side (atmosphere side), characteristics could deteriorate and durability be adversely affected.
  - When using this product in an environment where dust is a concern, it is recommended to use a filter.
  - As with secondary side load, if piping or the inface of the load is contaminated, characteristics and durability could be adversely affected. Blow air to remove foreign matter before connecting.
  - Install an air filter as shown in the recommended air circuit below if necessary.

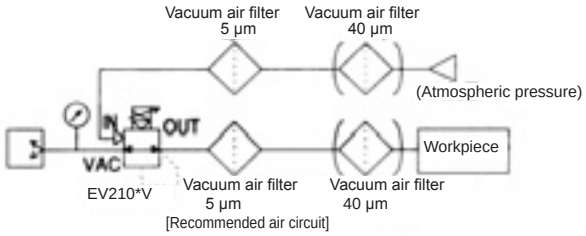

[Recommended air circuit]

- The secondary side pressure is maintained if power is turned OFF with the working pressure side in a vacuum state.
  - When releasing the secondary side to the atmosphere, lower the input signal and then turn the power OFF, or alternatively discharge the pressure with a shut-off valve. This holding state is not guaranteed for a long time.
- Working pressure is used to supply specified pressure to control pressure. Use the device within the working pressure range.
  - If working pressure is not supplied for a long time when secondary pressure is set within more than 0 MPa to 12% F.S., or if the product is left for a long time with working pressure at "control pressure + (-10 kPa)" or less, product life is shortened.
- Set the input signal within the specifications.
  - Applying a signal exceeding the range could reduce the life and properties. Do not use in this way.
- The current input can be used with input signal 1 to 5 V, but as opposed to other voltage input types, input impedance is small (250 Ω).
  Use an appropriate voltage generator.
- When the current input is wired, the power ground and signal common are shared.
  - When operating several EV units with one PLC and D/A, depending on the D/A unit circuit, wiring could prevent the correct signal from being input.
    Consult with PLC maker.
- Apply a signal to offset the residual pressure (-5 kPa or equivalent) in the waiting status where the input signal is set to 0 kPa. If an offset signal is not applied, unnecessary operation of the solenoid valve will occur resulting in shorter service life.
- Even if pressure is set to 0 MPa, secondary pressure is not released and remains within 0 to -5 kPa range.
  - If 0 MPa is required, install a 3-way valve on the secondary side to switch to atmosphere, etc.

During use & maintenance

⚠ CAUTION

- Correct pressure control is not possible if IN port is plugged. Release this port to the atmosphere.
- When connecting a fitting to the piping port (VAC, OUT, IN), use seal material (sealing tape, gel sealant) to prevent leakage. Check that seal material or piping screw swarf does not enter the port. When tightening the VAC port fitting, use a wrench on the intake block (*27).
- When using the manifold and connecting several units with a module connection, atmosphere release ports (IN1 and IN2) are shared.
- The optional shield cable connector is a 4-conductor shield wire.
- When not using the green special application wire (monitor output, etc.), insulate so that there is no contact with other wires (including the shield wire). Unintended connection to the ground, etc., could cause malfunction or damage the product.
  Also wiring must be kept away from a noise source such as an intense electric field.
  Otherwise an external induction noise added to the monitor output will cause product damage.
- When using a hydraulic rotary vacuum pump, be sure to prevent oil from entering by breaking the vacuum with a residual pressure discharge valve, etc., after the vacuum pump power is turned OFF.
- Regularly inspect the product at least once a year to check that it operates correctly.
  - This product uses a small solenoid valve as actuator. The service life may change depending on the frequency of operation triggered by pressure switching, the working conditions, etc.
- The term of warranty is set as one year or 1 million repeated operations, whichever is earlier, so use this as an inspection guideline.
  * The conditions for the 1 million operations listed in the term of warranty are as follows.
    When repeatedly, in a step, applying an input signal which causes the control pressure to rise from zero to 90% of the max. control pressure. The working air quality in this case shall be clean compressed air from the recommended air circuit. The secondary side load capacity shall be 300 cm^3.

Thin electro pneumatic regulator MEVT Series

Design & selection

Circuit design

⚠WARNING

■ Understand compressed air features before designing a pneumatic circuit.
- The same functions as mechanical, hydraulic, and electrical methods cannot be anticipated when instantaneous holding of emergency stop is required.
- Pop-out, air discharge, or leakage due to air compression and expansion could occur.

■ Confirm that the product withstands the working environment.
- This product cannot be used in an atmosphere containing corrosive gas, chemical liquids, solvents, water, vapor, or ozone. If water, oil, or metal chips (spatter or cutting chips, etc.) could come in contact with the product, provide appropriate protect.
- This product cannot be used in an explosive gas atmosphere.

■ Care must be taken to the electrical circuit during emergency stop and cylinder operation, etc., during a service interruption.

■ Install a "pressure switch" and "shut-off valve" on the device's compressed air supply side.
- The pressure switch disables operation if set pressure cannot be reached. The residual pressure release valve will release compressed air left in the pneumatic pressure circuit, and will prevent the residual pressure from accidentally operating pneumatic components.

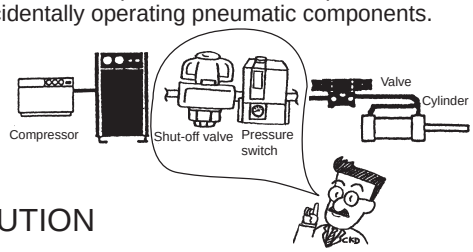

⚠CAUTION

■ Indicate the maintenance conditions in the device's instruction manual.
- The product's function can drop markedly with working status, working environment, and maintenance, and can prevent safety from being attained. With correct maintenance, the product functions can be used to the fullest.

■ Use the constant voltage power supply.

■ Set the input signal within the specifications.
- Applying a signal exceeding the range could reduce the life and properties. Do not use in this way.

■ Apply a signal to offset the residual pressure (EVT100: 2 kPa, EVT500: 10 kPa or equivalent) in the waiting status where the input signal is set to 0 MPa. If an offset signal is not applied, unnecessary operation of the solenoid valve will occur resulting in shorter service life.

■ Check for leakage current to prevent malfunctions due to leakage current from other fluid control components.
When using a programmable controller, etc., leakage current could cause the EVT to malfunction.

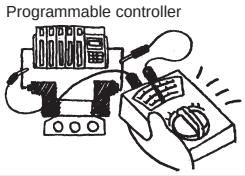

24 VDC	1.8 mA or less

■ Take the following countermeasures to prevent malfunction caused by noise.
- Insert a line filter in the AC power supply line.
- Use a surge suppressor, such as CR or diode on the inductive load (solenoid valve, relay, etc.), to remove noise where it is generated.
- Separate wiring to the MEVT device from strong magnetic fields.
- Use the designated wire material for the serial transmission line.
- If operation could be affected by noise, wire the power supply independently for each manifold if possible.
- Keep the power supply cable as short as possible.
- Do not share power with components such as an inverter, motor, etc., that cause noise.
- Do not lay the power wire, signal wire, and other power cables in parallel.

■ Precautions for wiring
- When wiring the common terminal block or D sub-connector, the power supply ground and signal common are shared. When driving several EVT units with one PLC and D/A unit, depending on the D/A unit circuit, wiring could prevent the correct signal from being output. Consult with the PLC maker. When using a shield wire, connect it to the ground on the power supply side.

■ This regulator cannot be used with a cylinder having a large leakage rate, such as an air bearing cylinder.
- When using for blowing applications or when back pressure is applied on the secondary side, it is not possible to maintain the set pressure. A large beating sound will be generated and life will be shortened.

■ Residual pressure of 2 kPa or less (EVT100) or 10 kPa or less (EVT500) will be generated even when the input signal is set to 0%. If 0 MPa is required, install a three-way valve on the secondary side or release into the atmosphere, etc.

⚠CAUTION

■ Install a valve on the primary side and secondary side as necessary.
- If the regulator is left with power off and primary pressure applied, secondary pressure could rise to the primary pressure level. If this poses a safety hazard, take measures using a valve on the primary side or secondary side, etc.

■ Working environment
Do not use the product where the product is exposed to direct sunlight or may come in contact with water, oil, etc. Consult with CKD on specifications when using outside designated specifications or for special applications.
- Ambient temperature
  ·Higher than 50˚C or lower than 5˚C.
- Vibration/shock
  ·Vibration 50 m/s^2 and over and impact 300 m/s^2 and over.

■ The accuracy of pressure is affected by self-heating due to energization in addition to temperature characteristics.
The more station No. of manifolds increases, the more the influence grows. To ensure a stabler pressure, set a longer stand-by time (over 30 min. after energization).

■ Drip-proof environment
This product's degree of protection is IP40 or equivalent. Do not install this product where water, salt, dust, or swarf is present or in a pressurized or depressurized environment. Use where the temperature changes greatly or where high humidity environment could cause damage through dew condensation.

■ CE-compliance working conditions
MEVT is conforming to the EMC Directive and CE standard. The standard for the immunity for industrial environments applied to this product is EN61000-6-2; the following requirements must be satisfied in order to conform to this standard:
Conditions
● Use a power cable of shorter than 3 m.

Mounting / Installation / adjustment

Mounting

⚠ WARNING

■ Do not install MEVT by supporting it with pipes.
● Fix MEVT body.

■ Do not wash MEVT with water or solvent, or paint the body.
● Some resin parts may be damaged.
Paint could plug the exhaust port and result in malfunctions.

⚠ CAUTION

■ Secure sufficient space around EVT for installation, removal, wiring, and piping work.

■ Install a pneumatic filter just before using the pneumatic component in the circuit.

■ Response is affected by working pressure and load volume. If repeatability with stable responsiveness is required, install a regulator in the proceeding stage.

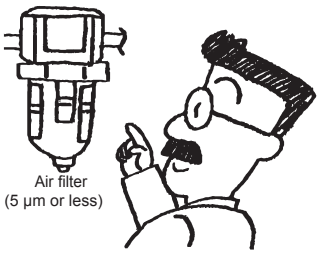

■ Mounting orientation
● MEVT is mounted on a DIN rail. If the manifold's total weight exceeds 1 kg, or when using MEVT in an environment with vibration or impact, fix DIN rails on the mounting surface at pitch of 50 to 100 mm. Check that there are no problems with mounting.
● Although there is no restriction in mounting direction and orientation, attention should be paid to loose set screws caused by resonance due to vibration that may cause drop of manifold during operation.
● Mounting and removal method of MEVT
Removing
Loosen the four DIN rail set screw (two each on left/ right).
Mounting
1. Catch the jaws into the DIN rail in the order of (1), (2).
2. Press the retainer in the direction of (3).
3. While holding down so that there is no gap between blocks, tighten DIN rail set screws. (recommended tightening torque 0.6 to 0.8 N·m).

Note: If retainer jaws are not securely set, air could leak or the product could drop. Check that these jaws are secure.

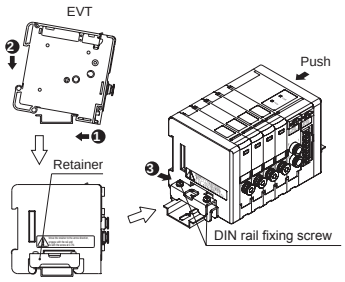

Piping

⚠ CAUTION

■ Do not remove MEVT packaging until just before piping.
● If the package is removed before connecting pipes, foreign matter could enter EVT from the piping port and result in fault or malfunction.

■ Always flush just before piping pneumatic component.
● Check that foreign matter in pipes does not enter EVT.

■ Connect piping so that connections are not dislocated by system movement, vibration, or tension.

■ The exhaust port (R) should be open to the atmosphere to discharge air appropriately.

■ Do not narrow EVT exhaust port (R) to smaller than the connected pipe port size.
Otherwise air may be taken in at the exhaust port (R) of EVT due to valve element operation, causing foreign matter around the exhaust port (R) to enter the inside. Foreign matter may enter also when the exhaust port (R) is open upward.
Install a silencer and/or make the exhaust port (R) open downward.
● Actuator will not operate correctly if exhaust air is not discharged smoothly. In case of the manifold, exhaust air may prevent other EVTs' normal operation.

■ When supplying compressed air for the first time after connecting pipes, do not apply high pressure suddenly.
● Piping connection could be dislocated or the piping tube jump about leading to accidents.
● CAUTION: If compressed air is supplied too slowly, sealing pressure may not be generated depending on the internal sealing mechanism of the EVT and may cause air leakage.

■ Before supplying compressed air after connecting pipes, check that there are no air leaks at any pipe connections.
- Apply a leakage detection agent on pipe connections with a brush, and check for air leaks.

■ Observe the following precautions when using nylon tubes or urethane tubes for piping material.
- Use flame resistant tubes where spatter could scatter.

■ Piping connection
- Applicable tube
  Use CKD specified tube.
  Soft nylon (F-1500 Series)
  Urethane (U-9500 Series)
  When using a commercially available tube, check external dimension accuracy, thickness, and hardness. Use an urethane tube with a hardness of 93˚ and over (rubber hardness meter). If a tube that does not satisfy the diameter accuracy or hardness is used, the chucking force may drop, the tube may dislocate, or may be difficult to insert.

Tube size

O.D. mm	I.D. mm	
	Nylon	Urethane
ø4	ø2.5	ø2
ø6	ø4	ø4

Tolerance of O.D.

Soft/hard nylon	±0.1 mm
Urethane ø4, ø6	+0.1 mm -0.15 mm

- Bending radius of tube
  The tube's bending radius must be larger than the min. bending radius. (Otherwise, this could result in dislocation or leakage)

Bore size	Min. bending radius mm	
	Nylon	Urethane
ø4	10	10
ø6	20	20

- Min. tube length
  As a guide, the output port (A) tube length should have a capacity of 1 cc and over.
  (Otherwise this could result in vibration)

Bore size	Min. length mm	
	Nylon	Urethane
ø4	200	320
ø6	80	80

- Cut of tube
  Use a tube knife (AZ1200), and cut at a right angle to the axis. Air could leak if a tube cut at a slant is inserted.
- Tube connection state
  Provide a straight section as long as O.D. of the tube being used from the end of the fitting, and avoid piping with a sudden bending at the fitting insertion port. Check that the tube's tensile force in the lateral direction does not exceed 40 N.
- Applicable blanking plug
  Use CKD specified blanking plug.
  Blanking plug GWP□-B Series

During use & maintenance

Quality of air

⚠ WARNING

■ Do not supply other than compressed air.
■ Use clean compressed air that does not contain corrosive gases.
■ Use clean dry air of “JISB8392-1:2012 (ISO85731-1:2010) [1:3:2] equivalent”.

⚠ CAUTION

■ Poor air quality will worsen the characteristics and adversely affect the durability.
- For the pneumatic pressure source, supply clean air from which solids, moisture, and oil have been sufficiently removed with a dryer, air filter, and oil mist filter.

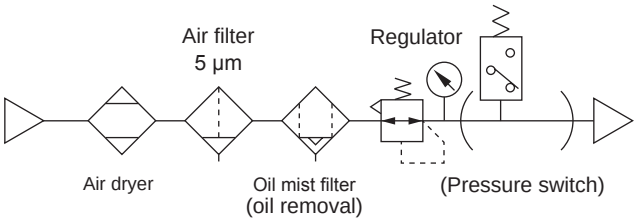

[Recommended air circuit]

- If the secondary side pressure is reduced, air on the secondary side will pass through inside EVT and exit from the exhaust port (R). Contamination on the secondary piping and the inface of the load will have an adverse effect on the characteristics, etc. Thus, keep the inface of the piping as clean as possible.
- Pneumatic components must be disassembled and assembled by a qualified worker.
  Personnel involved in this step must have passed the Pneumatic Pressure Skill Test Class 2 or higher.
- Read the relevant product instruction manual thoroughly and fully familiarize yourself with work before disassembling or assembling the pneumatic component.

During use & maintenance

⚠ WARNING

■ Be sure to turn power OFF, stop supplying compressed air, and check that there is no residual pressure before starting maintenance.
- These are required conditions to ensure safety.

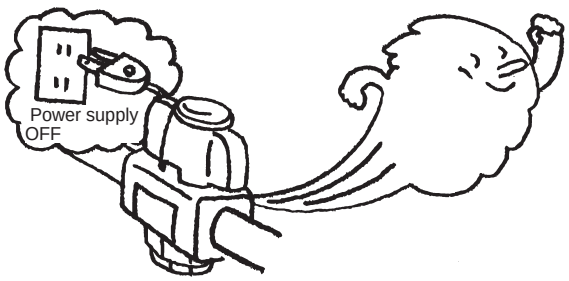

⚠ CAUTION

■ Conduct daily inspections and regular inspections to ensure that maintenance control is done correctly.

● If maintenance is not correctly controlled, the product's functions could drop markedly and lead to a shortened life, damage, malfunctions, faults, and accidents.

1. Pressure control of supplied compressed air

● Is the set pressure supplied? Does the pressure gauge indicate the set pressure during operation of the device?

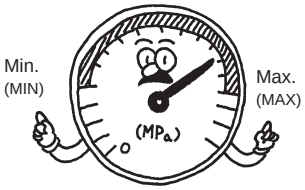

2. Control of pneumatics filter

● Is the drain correctly discharged?
Is the bowl or element clean enough to use?

3. Air leak management at pipe joints

● Is the state of the connection, especially at movable sections, normal?

4. EVT Operational status control

Are operations delayed? Is exhaust normal?

5. Control of pneumatic actuator operation

● Is operation smooth? Is the end stop state normal? Is coupling with the load normal?
Is coupling with the load normal?

■ Regularly inspect the product at least once a year to check that it operates correctly.

● This product uses a small solenoid valve as actuator. The service life may change depending on the frequency of operation triggered by pressure switching, the working conditions, etc.
The term of warranty is set as one year or 1 million repeated operations, whichever is earlier, so use this as an inspection guideline.

* The conditions for the 1 million operations listed in the term of warranty are as follows.
When the input signal which causes the control pressure to rise from zero to the max. control pressure is repeatedly applied in steps. The working air quality in this case shall be clean compressed air from the recommended air circuit. The secondary side load capacity shall be 15cm³.

Others

⚠ CAUTION

■ Do not disassemble the product. Doing so may cause product failure.
Operation after disassembly cannot be guaranteed.

■ If power is turned OFF in pressurized state, control pressure is held.
To discharge pressure, lower set pressure and turn power OFF, or use a shut-off valve, etc. This holding state is not guaranteed for a long time.

■ Check that supply pressure does not drop to less than the "set secondary pressure + max. control pressure × 0.1".
If supply pressure is not supplied for a long time when control pressure is set within more than 0 MPa to 12% F.S., large beating sound is generated and product life will be shortened. Avoid using so.

■ When using EVT Series, if there is leakage in secondary piping, vibration could occur.
Securely pipe the system so that there is no leakage. Otherwise the set pressure cannot be maintained causing a large buzzing noise and will result in shorter service life.

How to replace cartridge fitting

⚠ CAUTION

Check procedures before changing the push-in fitting size. If installed not correctly, leakage could be occurred.

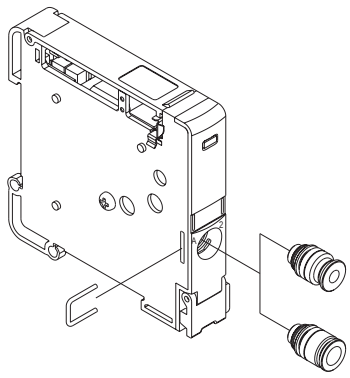

(1) Remove the stopper pin with a screwdriver.
(2) Pull the fitting out.
* Check that the filter is not removed when replacing.
(3) Insert the replacement fitting vertically to the end.
(4) Insert the stopper pin. Pull on the joint and confirm that it is installed correctly.

Model No. of cartridge push-in fitting

Model No.	Part name	Model No.
EVT	ø4 straight	4G1-JOINT-C4-P70
	ø6 straight	4G1-JOINT-C6-P70

MEMO

Pneumatic auxiliary components

	Page
Speed controller	897
Auxiliary valve (check valve/quick valve)	929
Fitting/tube	943

Speed controller

SC*

Pneumatic auxiliary components

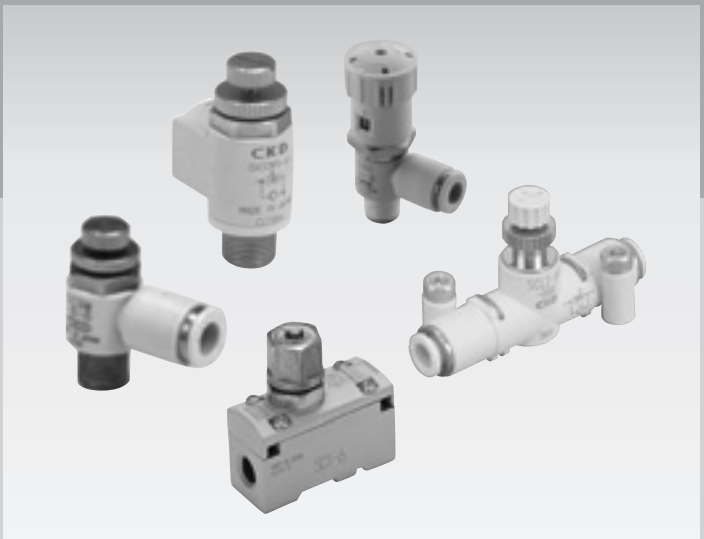

CONTENTS

Series variation	898
● Speed controller with dial (DSC)	900
● Direct piping/elbow (SC3R)	908
● Elbow with push-in fitting (SC3W)	910
● Medium port size Rc1/8 to Rc1/2 (SC1)	914
● Line with push-in fitting (SCL2)	916
● In-out inline with push-in fitting (SCD2)	916
● Needle valve inline with push-in fitting (SCL2-N)	920
⚠ Safety precautions	925

Speed controller

● Applicable to ø2.5 to ø160 cylinders

Values in ( ) are for the low speed, fine speed or flow rate types.

Model/appearance	Model No.	Port size (Rc or R)						Applicable tube O.D.							Effective cross-sectional area (mm²)		Flow rate (ℓ/min) ANR Pressure 0.5 MPa		Applicable cylinder bore size (mm)	Page
		M3	M5	1/8	1/4	3/8	1/2	ø1.8	ø3.2	ø4	ø6	ø8	ø10	ø12	Free flow	Controlled flow	Free flow	Controlled flow		
● Speed controller with dial	DSC-C-M5-4-P7*		●							●					1.5	0.9 (0.3) (0.1)	100	60 (20) (6.7)	ø6 to ø25	900
	DSC-C-M5-6-P7*		●								●				1.5	0.9 (0.3) (0.1)	100	60 (20) (6.7)	ø6 to ø25	
	DSC- (C-) 6-4-P7*			●						●					3.2	2.4 (0.9) (0.2)	210	160 (60) (13)	ø15 to ø32	
	DSC- (C-) 6-6-P7*			●							●				4	3 (0.9) (0.2)	270	200 (60) (13)	ø15 to ø32	
	DSC- (C-) 6-8-P7*			●								●			4	3 (0.9) (0.2)	270	200 (60) (13)	ø15 to ø32	
	DSC-8-6-P7*				●						●				7	5 (2)	470	320 (130)	ø20 to ø50	
	DSC-8-8-P7*				●							●			8	6 (2)	530	400 (130)	ø20 to ø50	
	DSC-8-10-P7*				●								●		8	6 (2)	530	400 (130)	ø20 to ø50	
	DSC-10-6-P7*					●					●				10	6 (4)	670	400 (270)	ø32 to ø75	
	DSC-10-8-P7*					●						●			15	10.5 (4)	1000	700 (270)	ø32 to ø75	
	DSC-10-10-P7*					●							●		16	12 (4)	1070	800 (270)	ø32 to ø75	
	DSC-10-12-P7*					●								●	16	12 (4)	1070	800 (270)	ø32 to ø75	
	DSC-15-10-P7*						●						●		22	17 (6)	1470	1120 (400)	ø40 to ø100	
	DSC-15-12-P7*						●							●	24	17.5 (6)	1600	1200 (400)	ø40 to ø100	
● Direct piping/elbow	SC3R-M5-P7*		●												1.2	0.7	80	47	ø6 to ø16	908
	SC3R-6-P7*			●											4.0	3.6	270	240	ø15 to ø32	
	SC3R-8-P7*				●										7.5	7	500	470	ø20 to ø50	
	SC3R-10-P7*					●									16	15	1100	1100	ø32 to ø75	
	SC3R-15-P7*						●								24	24	1600	1600	ø40 to ø110	
● Elbow with push-in fitting	SC3W-M3-3-P7*	●						●							0.4 (0.3)	0.3 (0.08)	27 (20)	20 (5.9)	ø4 to ø8	910
	SC3W-M3-4-P7*	●								●					0.4 (0.3)	0.3 (0.08)	27 (20)	20 (5.9)	ø4 to ø8	
	SC3W-M5-3-P7*							●							1.3 (1.2)	1.2 (0.1)	87 (80)	80 (6.7)	ø6 to ø25	
	SC3W-M5-4-P7*		●							●					1.3 (1.2)	1.2 (0.1)	87 (80)	80 (6.7)	ø6 to ø25	
	SC3W-M5-6-P7*		●								●				1.3 (1.2)	1.2 (0.1)	87 (80)	80 (6.7)	ø6 to ø25	
	SC3W-6-4-P7*			●						●					3.2 (3.2)	2.8 (0.2)	210 (210)	190 (13)	ø15 to ø32	
	SC3W-6-6-P7*			●							●				4.0 (4.0)	3.6 (0.2)	270 (270)	240 (13)	ø15 to ø32	
	SC3W-6-8-P7*			●								●			4	3.6	270	240	ø15 to ø32	
	SC3W-8-6-P7*				●						●				7	6.5	470	430	ø20 to ø50	
	SC3W-8-8-P7*				●							●			7.5	7	500	470	ø20 to ø50	
	SC3W-8-10-P7*				●								●		8	7	530	470	ø20 to ø50	
	SC3W-10-6-P7*					●					●				10	10	650	650	ø32 to ø75	
	SC3W-10-8-P7*					●						●			15	14	1000	930	ø32 to ø75	
	SC3W-10-10-P7*					●							●		16	15	1100	1000	ø32 to ø75	
	SC3W-10-12-P7*					●								●	16	15	1100	1000	ø32 to ø75	
	SC3W-15-10-P7*						●						●		22	22	1500	1500	ø40 to ø100	
	SC3W-15-12-P7*						●							●	24	24	1600	1600	ø40 to ø100	

Values in ( ) are for the low speed type.

Model/appearance	Model No.	Port size (Rc or R)						Applicable tube O.D.							Effective cross-sectional area (mm²)		Flow rate (ℓ/min.) ANR Pressure 0.5 MPa		Applicable cylinder bore size (mm)	Page
		M3	M5	1/8	1/4	3/8	1/2	ø1.8	ø3.2	ø4	ø6	ø8	ø10	ø12	Free flow	Controlled flow	Free flow	Controlled flow		
● Medium port size Rc1/8 to Rc1/2	SC1-6-P7*			●											11	8	730	530	ø20 to ø50	914
	SC1-8-P7*				●										14	13	930	870	ø32 to ø75	
	SC1-10-P7*					●									39	22	2600	1500	ø50 to ø140	
	SC1-15-P7*						●								43	36	2900	2400	ø80 to ø160	
● Inline with push-in fitting	SCL2-04-H22-P7*							●							(0.2)	(0.15)	13	10	ø4 to ø25	916
	SCL2-04-H42(24)-P7*							●		●					(0.2)	(0.15)	13	10	ø4 to ø25	
	SCL2-04-H44-P7*									●					1.9	1.9 (0.2)	130	130 (13)	ø4 to ø25	
	SCL2-06-H66-P7*										●				4.5	4.5 (0.2)	300	300 (13)	ø6 to ø40	
	SCL2-08-H66-P7*										●				6	6	400	400	ø20 to ø50	
	SCL2-08-H88-P7*											●			8	8	550	550	ø20 to ø50	
	SCL2-10-H88-P7*											●			13.5	13.5	900	900	ø32 to ø75	
	SCL2-10-H1010-P7*												●		16.5	16.5	1100	1100	ø32 to ø75	
	SCL2-10-H1212-P7*													●	18	18	1200	1200	ø32 to ø75	
● In-out inline with push-in fitting	SCD2-04-H22-P7*							●							–	(0.15)	–	(10)	ø4 to ø25	
	SCD2-04-H42-P7*							●		●					–	(0.15)	–	(10)	ø4 to ø25	
	SCD2-04-H44-P7*									●					–	1.5 (0.2)	–	100 (13)	ø4 to ø25	
	SCD2-06-H66-P7*										●				–	3.7 (0.2)	–	250 (13)	ø6 to ø40	
	SCD2-08-H66-P7*										●				–	5	–	330	ø20 to ø50	
	SCD2-08-H88-P7*											●			–	6	–	400	ø20 to ø50	
	SCD2-10-H88-P7*											●			–	11	–	750	ø32 to ø75	
	SCD2-10-H1010-P7*												●		–	12.5	–	850	ø32 to ø75	
	SCD2-10-H1212-P7*													●	–	13	–	900	ø32 to ø75	
● Needle valve (with push-in fitting)	SCL2-N-04-H44-010									●					–	0.2	–	13	-	920
	SCL2-N-04-H44-050									●					–	0.7	–	50	-	
	SCL2-N-06-H66-010										●				–	0.2	–	13	-	
	SCL2-N-06-H66-050										●				–	0.7	–	50	-	
	SCL2-N-06-H66-150										●				–	2.2	–	150	-	
	SCL2-N-08-H66-300										●				–	4.5	–	300	-	
	SCL2-N-08-H88-300											●			–	4.5	–	300	-	

Flow rate can be seen!

A compact type is added to the speed controller featuring a dial with linear characteristics

Smallest in the industry* Compact

Use of a small dial allows installation on the speed controller cylinder without interfering with the ground surface of the cylinder. (PAT.)

* Based on investigation in October, 2015 by CKD.

Industry's smallest

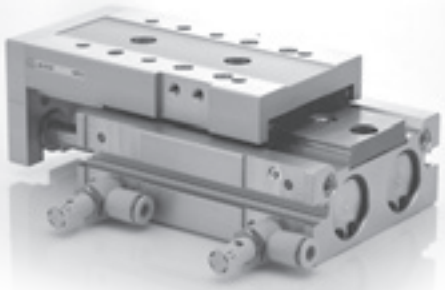

< Received the 2016 Good Design Award >

More precise quantification achieved Compact

Indicator displays the number of dial rotations in increments of 0.5.
Finer quantification is now possible.

Operability has been improved
With "clickings" that can be felt with your fingertips, each 0.5 turn can now be confirmed even in situations where the dial display cannot be visually inspected.

Variety of models		Tube outer diameter	Port size: M5	R1/8	R1/4	R3/8	R1/2
Compact	Standard flow rate DSC-C-*-*	ø3.2	●				
		ø4	●	●			
	Low flow rate DSC-C-*-*-L	ø6	●	●			
		ø8		●			
	Ultra-low flow rate DSC-C-*-*-F	ø4	●	●			
		ø6	●	●			
Standard	Low flow rate DSC-*-*-L	ø4		●			
		ø6		●	●	●	
		ø8		●	●	●	
	Standard flow rate DSC-*-*	ø10			●	●	●
		ø12				●	●

Broad lineup

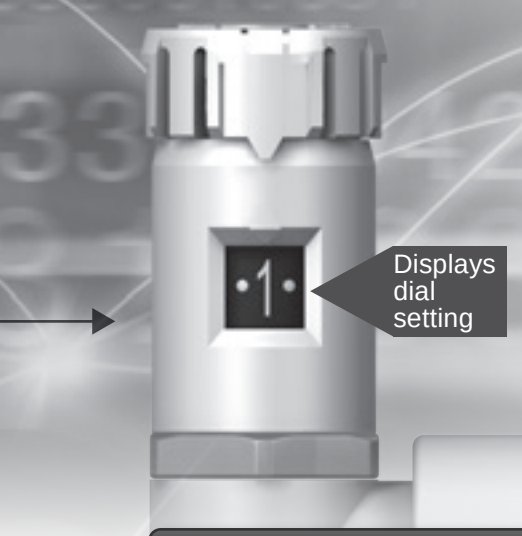

Speed controller with adjusting dial

DSC Series

Flow characteristics proportional to dial value

Compact Standard

Thanks to the optimal design of the needle, linear flow characteristics proportional to the dial indicator value are achieved and cylinder speed setting is made easy.
Flow rate barely varies and can be reset by simply setting the dial to the same value during replacement.
Job-hours can be significantly reduced and misalignments prevented.

[Flow characteristics]

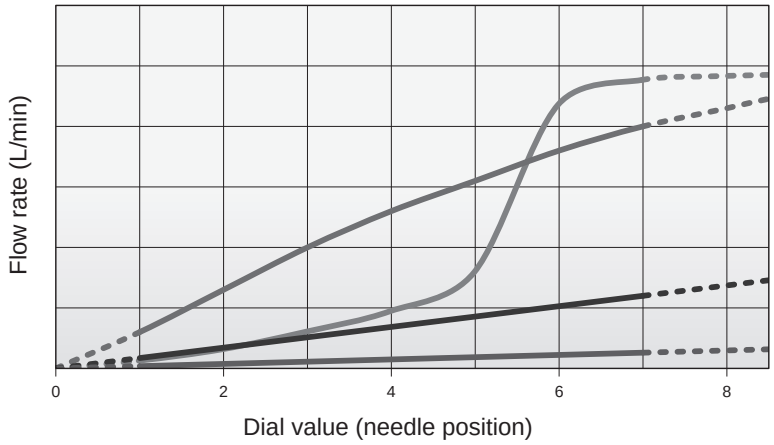

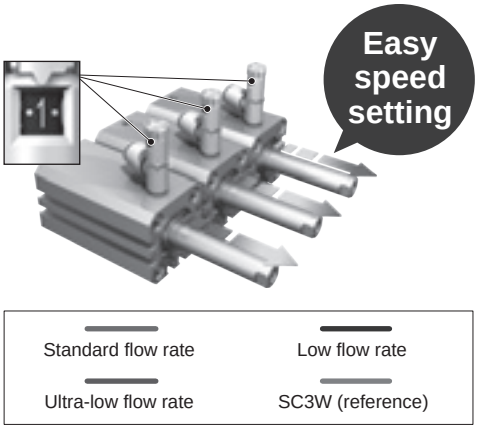

Easy adjustment

Compact Standard

Push locking method is used for fixing the needle.
Locking is secured without needle movement.
Adjustment is easy with simple operation.

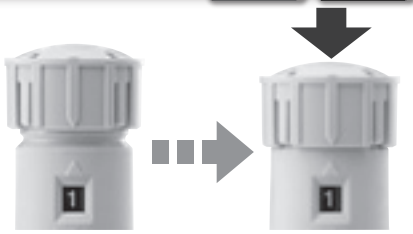

Knob features rotation position indicators
Easy management of cylinder speed values.

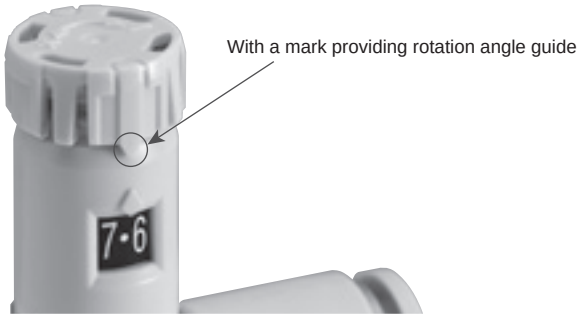

Dial indicator can be verified from 2 sides.

The dial indicator can be visually checked from the front and rear sides.

Speed controller with adjusting dial

DSC Series

● Port size: M5, R1/8 to R1/2

JIS symbol 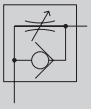 (meter-out) 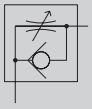 (meter-in)

RoHS CAD

Structure and material restriction

	Structure/treatment	Material restriction			Model No.
P7 Series	Dust generation preventing				– P70
	Dust generation preventing	Copper-based materials prohibited	Silicon-based materials prohibited	Halogen-based materials prohibited (fluorine, chlorine, bromine)	– P74

Specifications

● Compact

Descriptions			DSC-C-M5		DSC-C-6		
Applicable tube O.D.		mm	ø4	ø6	ø4	ø6	ø8
Port size			M5		R1/8		
Working fluid			Compressed air				
Max. working pressure		MPa	1.0				
Min. working pressure		MPa	0.05				
Proof pressure		MPa	1.5				
Fluid temperature		°C	5 to 60 (no freezing *2)				
Ambient temperature		°C	0 to 60 (no freezing)				
Needle control range			1 to 7 rotation				
Weight		g	11.5	12	22	23	24
Free flow	Flow rate	L/min (ANR)	100		210	270	
	Effective cross-sectional area	mm^2	1.5		3.2	4	
Control flow (standard flow rate)	Flow rate	L/min (ANR)	60		160	200	
	Effective cross-sectional area	mm^2	0.9		2.4	3	
Control flow (low flow rate)	Flow rate	L/min (ANR)	20		60		
	Effective cross-sectional area	mm^2	0.3		0.9		
Control flow (Ultra-low flow)	Flow rate	L/min (ANR)	6.7		13		–
	Effective cross-sectional area	mm^2	0.1		0.2		–

● Standard

Descriptions			DSC-6			DSC-8			DSC-10				DSC-15	
Applicable tube O.D.		mm	ø4	ø6	ø8	ø6	ø8	ø10	ø6	ø8	ø10	ø12	ø10	ø12
Port size			R1/8			R1/4			R3/8				R1/2	
Working fluid			Compressed air											
Max. working pressure		MPa	1.0											
Min. working pressure		MPa	0.05											
Proof pressure		MPa	1.5											
Fluid temperature		°C	5 to 60 (no freezing *2)											
Ambient temperature		°C	0 to 60 (no freezing)											
Needle control range			1 to 10 rotation											
Weight		g	33	34	35	45	46	48	60	61	64	65	95	97
Free flow	Flow rate	L/min (ANR)	210	270		470	530		670	1000	1070		1470	1600
	Effective cross-sectional area	mm^2	3.2	4		7	8		10	15	16		22	24
Control flow (standard flow rate)	Flow rate	L/min (ANR)	160	200		320	400		400	700	800		1120	1200
	Effective cross-sectional area	mm^2	2.4	3		5	6		6	10.5	12		17	17.5
Control flow (low flow rate)	Flow rate	L/min (ANR)	60			130			270				400	
	Effective cross-sectional area	mm^2	0.9			2			4				6	

*1: The flow is expressed by the atmospheric pressure conversion value at 0.5 MPa.
*2: Freezing could occur by adiabatic expansion depending on the air quality (dew point).

How to order

DSC -C - 6 - 6 - I L - P70

Ⓐ Product size
Ⓑ Port size
Ⓒ Applicable tube O.D.
Ⓓ Control method
Ⓔ Flow type
Ⓕ Clean room specifications

Code	Content
Ⓐ Product size	
Blank	Standard
-C	Compact
Ⓑ Port size	
M5	M5
6	R1/8
8	R1/4
10	R3/8
15	R1/2
Ⓒ Applicable tube outer diameter	
4	ø4
6	ø6
8	ø8
10	ø10
12	ø12
Ⓓ Control method	
Blank	Meter-out
I	Meter-in (Push ring color: Black)
Ⓔ Flow type	
Blank	Standard flow rate
L	Low flow rate
F	Ultra-low flow (compact only)

Ⓕ Clean room specifications		
	Structure/treatment	Material restriction
P70	Dust generation preventing	–
P74	Dust generation preventing	Copper-based/silicon-based/ halogen-based materials (fluorine, chlorine, bromine) are prohibited

*No sealant is applied.

Combinations of Port size, Applicable tube O.D. and Flow type

Product size	Compact		Standard			
Port size	**M5**	**R1/8**	**R1/8**	**R1/4**	**R3/8**	**R1/2**
ø4	◎	◎	○			
ø6	◎	◎	○	○	○	
ø8		○	○	○	○	
ø10				○	○	○
ø12					○	○

○: Flow type "F (ultra-low flow)" selection not allowed
◎: Flow type "F (ultra-low flow)" selection allowed

Flow characteristics

*The flow rate characteristics graph indicates reference values and does not guarantee the values.

● Compact

● DSC-C-M5-*-P7*

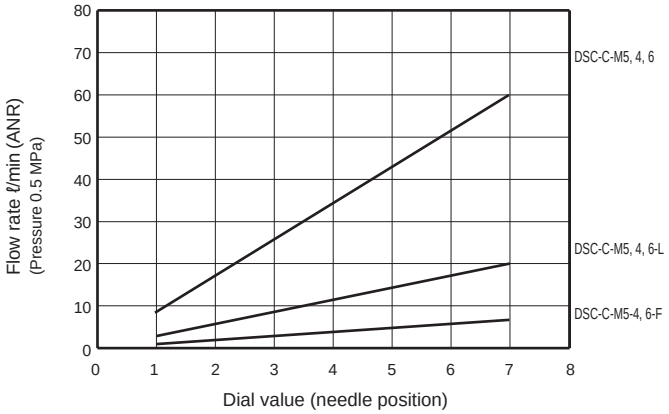

● DSC-C-6-*-P7*

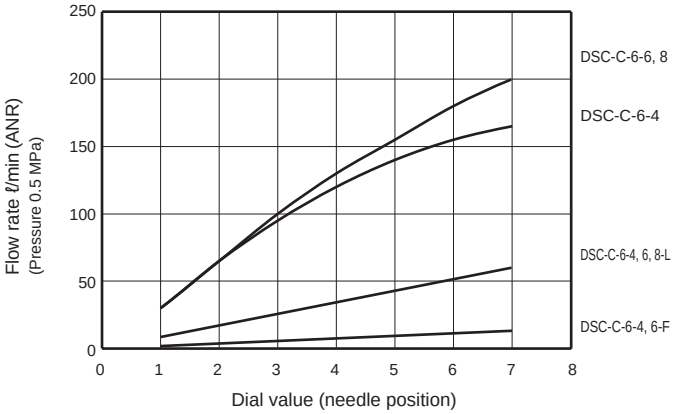

● Standard

● DSC-6-*-P7*

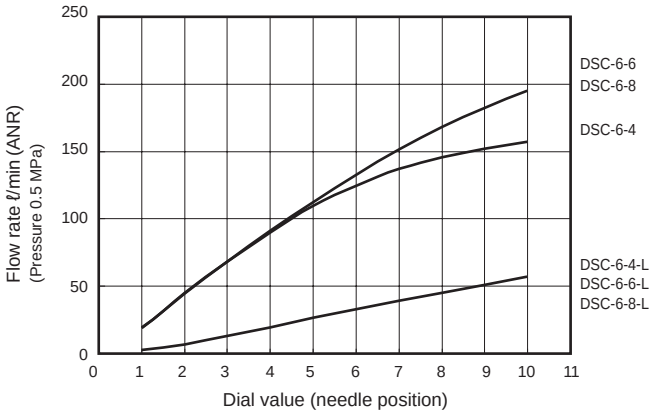

● DSC-8-*-P7*

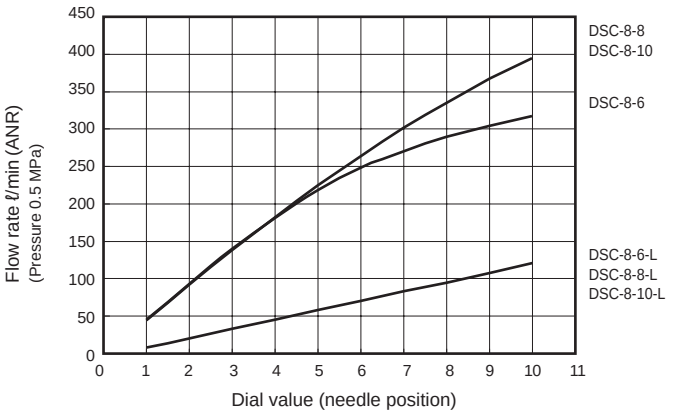

● DSC-10-*-P7*

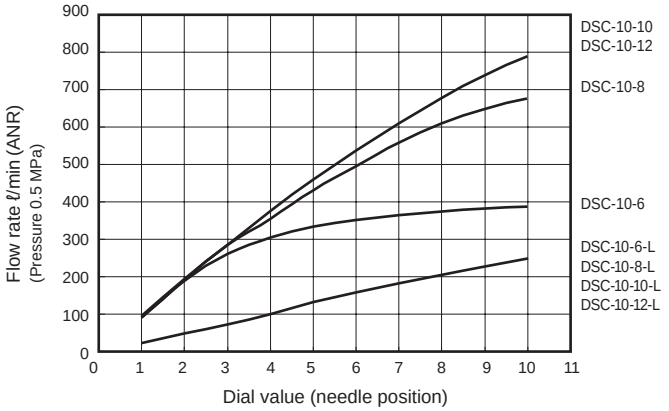

● DSC-15-*-P7*

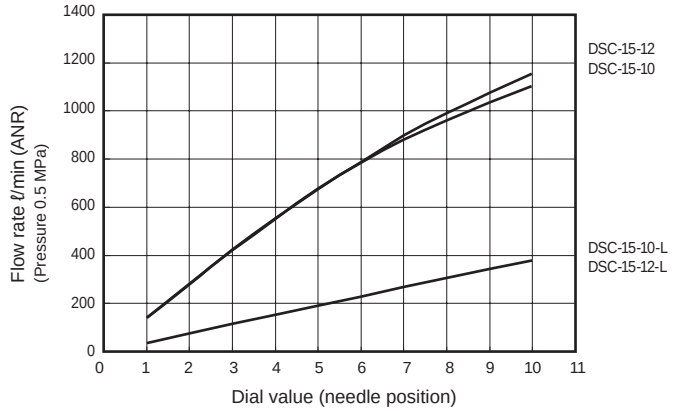

Note: The flow characteristics may differ depending on the piping conditions around the unit and the temperature change.

Dimensions

● Compact

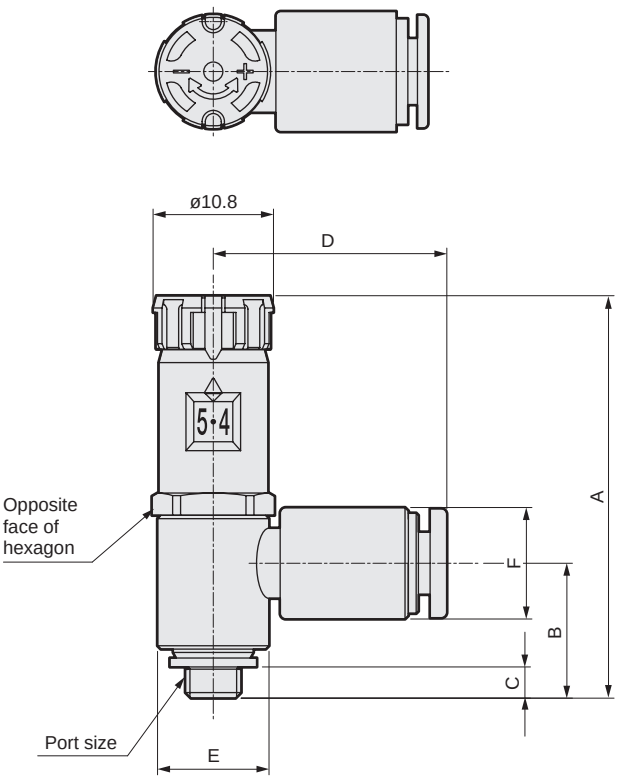

● Standard

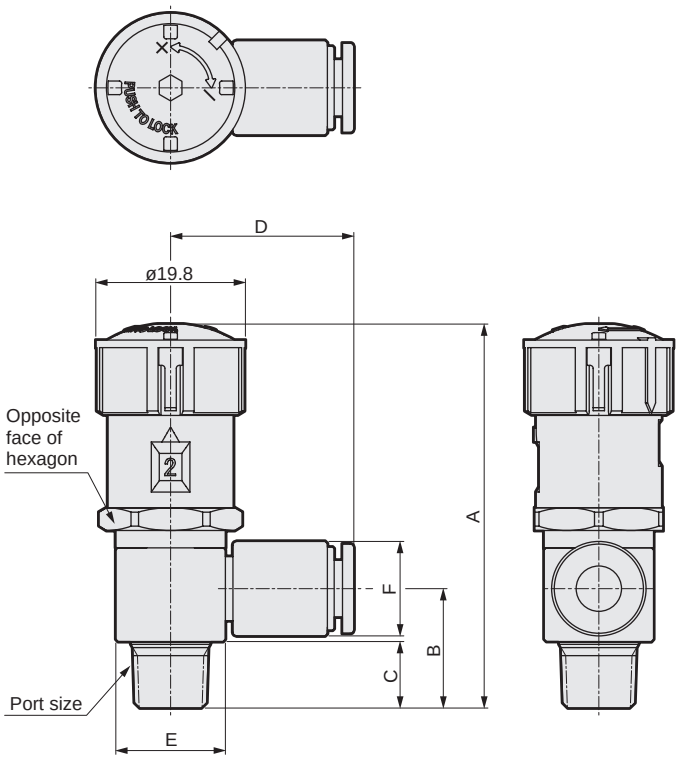

Model No.	Product size	Port size	Applicable tube O.D.	A Locked	A During adjustment	B	C	D	E	F	Opposite face of hexagon
DSC-C-M5-4-P7*	Compact	M5 × 0.8	ø4	36	37.5	11.9	3	21	10	10	10
DSC-C-M5-6-P7*			ø6			11.7		22.5		12.5	
DSC-C-6-4-P7*		R1/8	ø4	41.9	43.4	16.2	8.7	23.5	14.5	10	13
DSC-C-6-6-P7*			ø6			15.7		24.5		12.5	
DSC-C-6-8-P7*			ø8			15.4		26		14.5	
DSC-6-4-P7*	Standard	R1/8	ø4	51	54	16.2	8.7	23.5	14.5	10	17
DSC-6-6-P7*			ø6			15.7		24.5		12.5	
DSC-6-8-P7*			ø8			15.4		26		14.5	
DSC-8-6-P7*		R1/4	ø6	55.5	58.5	20	11.7	26	18	12.5	17
DSC-8-8-P7*			ø8			19		27.5		14.5	
DSC-8-10-P7*			ø10			19		30.5		17.5	
DSC-10-6-P7*		R3/8	ø6	58	61	23.1	12.7	28.5	22.5	12.5	19
DSC-10-8-P7*			ø8			21.3		30		14.5	
DSC-10-10-P7*			ø10			21.8		32		17.5	
DSC-10-12-P7*			ø12			21.7		33.5		20	
DSC-15-10-P7*		R1/2	ø10	63	66	25.2	15.7	34.5	27.5	17.5	24
DSC-15-12-P7*			ø12			25.7		36		20	

Safety Precautions

Always read this section before use.

Speed controller with dial

Design & selection

CAUTION

- This valve can not be used as a stop valve that has no leakage.
  Slight leakage is allowed in product specifications.
- Note that the flow rate may differ from the values on page 904 depending on the piping conditions around the unit and the temperature change.
- Do not use this valve in circuits where ozone is generated intentionally.
  Ozone resistance is sufficient for naturally generated ambient ozone. Packing deteriorates if ozone levels are high.

Mounting / Installation / adjustment

CAUTION

- The needle lock is released when the knob is pulled, and is locked when pressed.
- To adjust the flow rate, turn the knob to the right to close or the left to open.

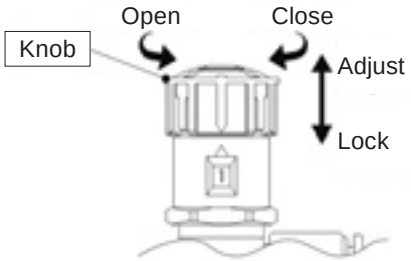

● When opening by rotating the knob to the left, the dial indicator will rotate clockwise: standard, and counterclockwise: compact.

- Do not handle the knob too quickly or roughly.
  ● Doing so may cause an indication error or other failures.
- After adjustment, push the knob to lock the needle.
- Controllable range of the needle is from 1 to 7 or 1 to 10 turns; operate with a maximum of 0.05 N·m torque.
  Turning the knob beyond the range forcibly may result in distorted flow characteristics or malfunctions.
- Even when the needle is fully closed, the dial display is not 0.
  Calibration of the flow rate against the dial indication is performed when the needle is not fully closed. Note that “0” is not always indicated when the needle is fully closed. A reading lower than "0" will be expressed by "-".
- Adjust speed by opening when the needle is nearly closed.
  If the needle is opened, the actuator could pop out suddenly and pose a hazard.
- Confirm the final speed after each usage.
  Confirm the final speed after each usage as the variabilitybetween products, actuators, conditions of use andambient temperatures will cause deviations.
- Use the specified tightening torque (table 1-(1)) when connecting pipes. To additionally tighten to adjust the position of the rotation rate indication window, use the torque in (table 1-(2)).
  Do not hold the knob when piping. Doing so may cause failure. Note that a pipe of port size:M5 cannot be aligned by re-tightening.

Thread size	(1) Connecting a pipe (N·m)	(2) Additional tightening (N·m)
M5	1.0 to 1.5	–
R1/8	3 to 5	9 or less
R1/4	6 to 8	14 or less
R3/8	13 to 15	24 or less
R1/2	16 to 18	30 or less

Tightening torque of port thread (table 1)

- Do not apply a lateral load to the main unit during or after installation.

MEMO

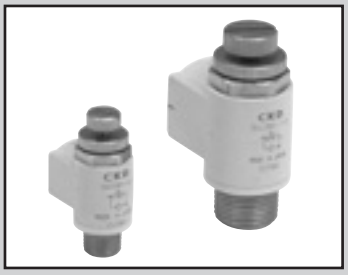

Speed controller direct piping/elbow

SC3R Series

● Port size: M5, Rc1/8 to Rc1/2

JIS symbol

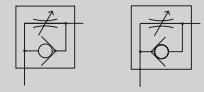

(meter-out) (meter-in)

RoHS CAD

Structure and material restriction

	Structure/treatment	Material restriction			Model No.
P7 Series	Dust generation preventing				– P70
	Dust generation preventing	Copper-based materials prohibited	Silicon-based materials prohibited	Halogen-based materials prohibited (fluorine, chlorine, bromine)	– P74

Specifications

Descriptions		SC3R-M5	SC3R-6	SC3R-8	SC3R-10	SC3R-15
Working fluid		Compressed air				
Max. working pressure	MPa	1.0				
Min. working pressure	MPa	0.05				
Proof pressure	MPa	1.5				
Fluid temperature	°C	5 to 60 (no freezing) *2				
Ambient temperature	°C	0 to 60 (no freezing)				
Port size		M5	Rc1/8	Rc1/4	Rc3/8	Rc1/2
Weight	g	14	40	70	110	190
Applicable cylinder bore size	mm	ø6 to ø16	ø15 to ø32	ø20 to ø50	ø32 to ø75	ø40 to ø110
Dial indicator value		11	14	14	14	16
Free flow	Flow rate ℓ/min (ANR)	80	270	500	1100	1600
	Effective cross-sectional area mm^2	1.2	4.0	7.5	16	24
Controlled flow	Flow rate ℓ/min (ANR)	47	240	470	1100	1600
	Effective cross-sectional area mm^2	0.7	3.6	7.0	15	24

*1: Flow rate is the atmospheric pressure conversion at 0.5 MPa.
*2: Freezing could occur by adiabatic expansion depending on air quality (dew point).

SC3R – M5 – I – P70

Ⓐ Port size

Ⓑ Option

Ⓒ Clean room specifications

Code	Content
Ⓐ Port size	
M5	M5 × 0.8
6	Rc1/8*
8	Rc1/4*
10	Rc3/8*
15	Rc1/2*
Ⓑ Option	
I	Meter-in
Blank	Meter-out

Ⓒ Clean room specifications

	Structure/treatment	Material restriction
P70	Dust generation preventing	–
P74	Dust generation preventing	Copper-based/silicon-based/halogen-based materials (fluorine, chlorine, bromine) are prohibited

* Sealant is not applied.

Flow characteristics

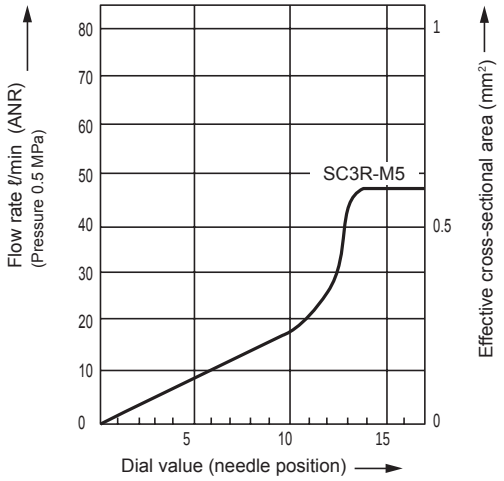

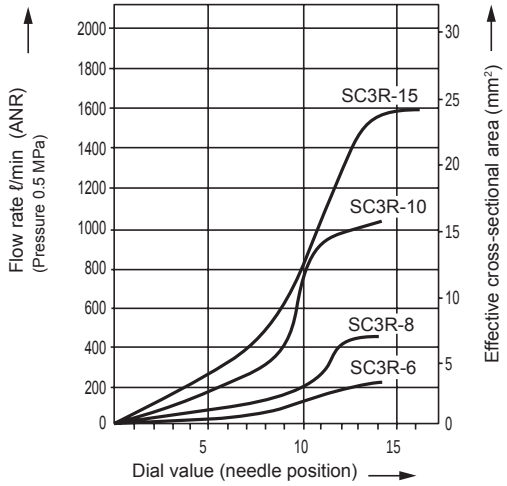

Dimensions

● SC3R-M5-P7 *

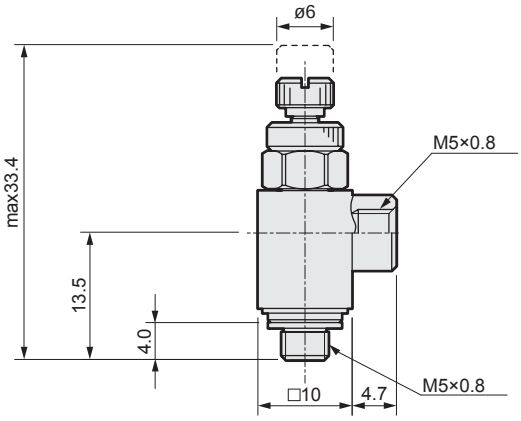

● SC3R-6~15-P7 *

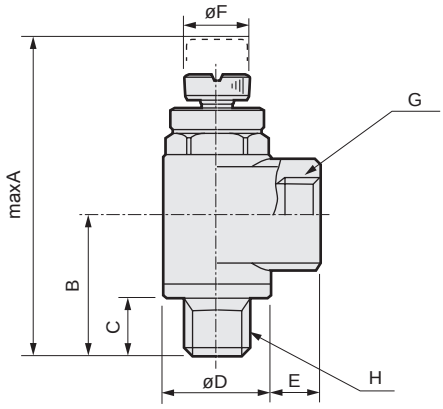

Model No.	A	B	C	D	E	F	G	H
SC3R-6-P7*	42.5	18.8	7.7	15.0	6.7	9	Rc1/8	R1/8
SC3R-8-P7*	51.2	23.2	10.7	19.0	9.4	12	Rc1/4	R1/4
SC3R-10-P7*	60.2	27.0	11.7	22.5	10.0	14	Rc3/8	R3/8
SC3R-15-P7*	66.7	30.0	14.7	27.0	13.7	16	Rc1/2	R1/2

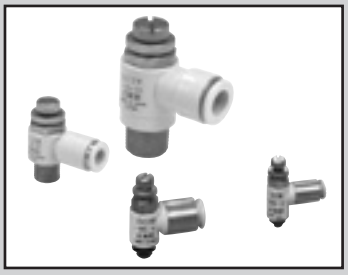

Speed controller, elbow with push-in fitting

SC3W Series

● Port size: M3, M5, R1/8 to R1/2

JIS symbol

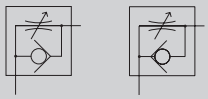

(meter-out) (meter-in)

RoHS CAD

Structure and material restriction

	Structure/treatment	Material restriction			Model No.
P7 Series	Dust generation preventing				– P70
	Dust generation preventing	Copper-based materials prohibited	Silicon-based materials prohibited	Halogen-based materials prohibited (fluorine, chlorine, bromine)	– P74

Specifications

Descriptions		SC3W																
		SC3W-M3		SC3W-M5			SC3W-6			SC3W-8			SC3W-10				SC3W-15	
Applicable tube O.D.	mm	ø3.2	ø4	ø3.2	ø4	ø6	ø4	ø6	ø8	ø6	ø8	ø10	ø6	ø8	ø10	ø12	ø10	ø12
Working fluid		Compressed air																
Max. working pressure	MPa	1.0																
Min. working pressure	MPa	0.05																
Proof pressure	MPa	1.5																
Fluid temperature	°C	5 to 60 (no freezing *3)																
Ambient temperature	°C	0 to 60 (no freezing)																
Port size		M3		M5			R1/8			R1/4			R3/8				R1/2	
Weight	g	4.9	5.7	7.9	8.8	9.6	25	26	27	50	51	54	63.7	75	78	81	134	138
Dial indicator value		10 (14) and over		10 (16) and over			10 (15) and over			13 and over			13 and over				14 and over	
Free flow: Flow rate	ℓ/min (ANR)	27 (20)		87 (80)			210 (210)	270 (270)	270	470	500	530	650	1000	1100		1500	1600
Free flow: Effective cross-sectional area	mm²	0.4 (0.3)		1.3 (1.2)			3.2 (3.2)	4.0 (4.0)	4.0	7	7.5	8	10	15	16		22	24
Controlled flow: Flow rate	ℓ/min (ANR)	20 (5.9)		80 (6.7)			190 (13)	240 (13)	240	430	470	470	650	930	1000		1500	1600
Controlled flow: Effective cross-sectional area	mm²	0.3 (0.08)		1.2 (0.1)			2.8 (0.2)	3.6 (0.2)	3.6	6.5	7	7.0	10	14	15		22	24

*1: Flow rate is the atmospheric pressure conversion value at pressure 0.5 MPa.
*2: Values in ( ) indicate low speed type.
*3: Freezing could occur by adiabatic expansion depending on air quality (dew point).

Flow characteristics

● Standard (port size M3, M5)

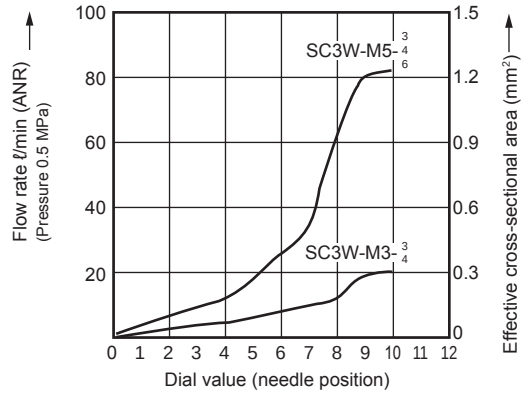

● Standard (port size 1/8)

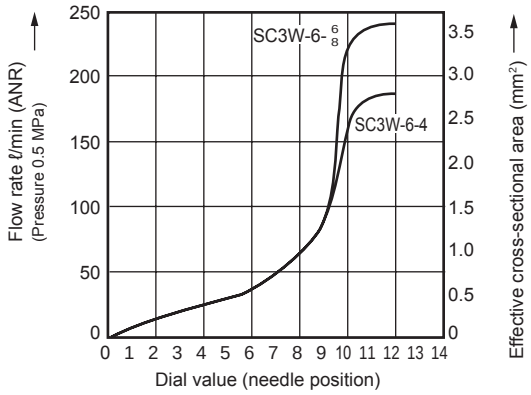

● Standard (port size 1/4 to 1/2)

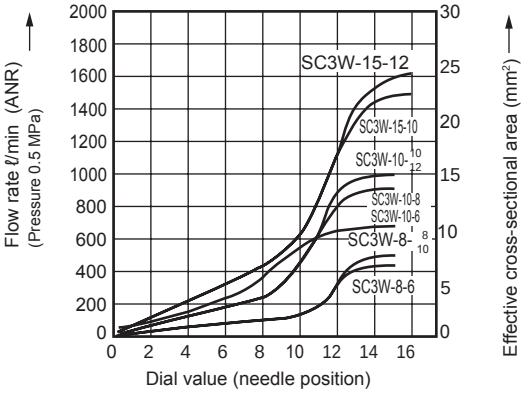

● Low speed

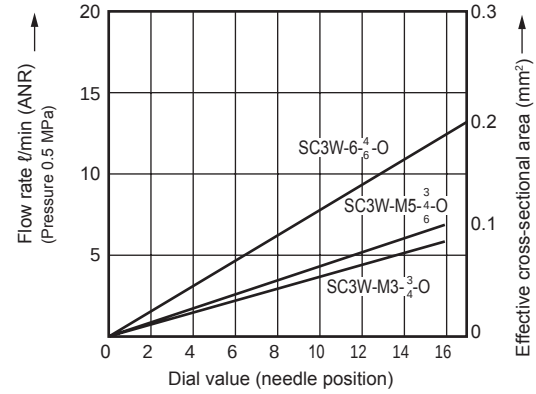

How to order

SC3W - M5 - 4 - I - P70

Model No.

Ⓐ Port size

Ⓑ Applicable tube O.D.

Ⓒ Option
*1
*2
*3

Ⓓ Clean room specifications

Code	Content
Ⓐ Port size	
M3	M3 × 0.5
M5	M5 × 0.8
6	R1/8*
8	R1/4*
10	R3/8*
15	R1/2*

Ⓑ Applicable tube O.D.

		Port size					
		M3	M5	6	8	10	15
3	ø3.2	●	●				
4	ø4	●	●	●			
6	ø6		●	●	●	●	
8	ø8			●	●	●	
10	ø10				●	●	●
12	ø12					●	●

Ⓒ Option

Blank	Meter-out
I	Meter-in (Push ring color: Black)
K	Hexagon head lock nut
O	Low speed

Ⓓ Clean room specifications

	Structure/treatment	Material restriction
P70	Dust generation preventing	-
P74	Dust generation preventing	Copper-based/silicon-based/halogen-based materials (fluorine, chlorine, bromine) are prohibited

Not available. * Sealant is not applied.

⚠ Precautions for model No. selection

*1: Options are indicated in alphabetic order.
*2: "K" can be selected for port size M3, M5 only.
*3: "O" can be selected for applicable tube O.D. "4" (ø4), "6" (ø6) for port size M3, M5 and "6" (R1/8).

[Example of model No.]

SC3W-M5-4-I-P70

Ⓐ Port size : M5 × 0.8
Ⓑ Applicable tube O.D.: ø4
Ⓒ Option : Meter-in
Ⓓ Clean room specifications : Dust generation preventing

SCPD3
SCM
SSD2
MDC2
SMG
LCM
LCR
LCG
LCX
STM
STG
STR2
MRL2
GRC
Cylinder switch
MN3E MN4E
4GA/B
M4GA/B
MN4GA/B
F.R (module unit)
Clean F.R
Precision R
Press gauge Diff. press gauge
Electro-pneumatic R
Speed controller
Auxiliary valve
Fitting/ tube
Clean air unit
Pressure sensor
Flow rate sensor
Valve for air blow
Ending

Dimensions CAD

● SC3W-M 3/5 -*-P7*

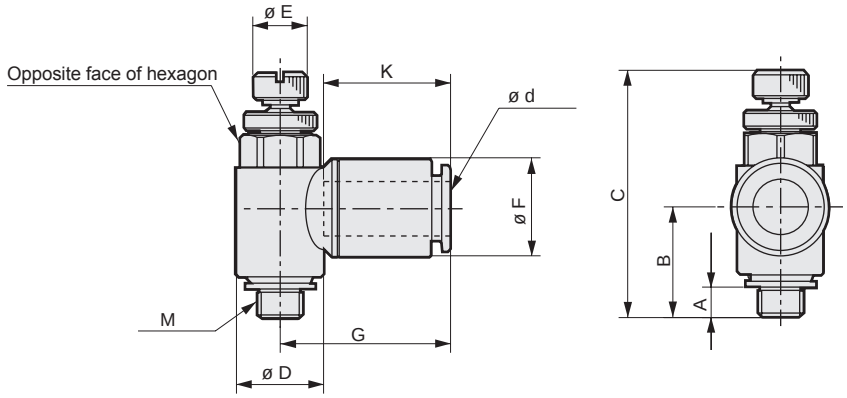

Model No.	ø d (applicable tube O.D.)	M	A	B	C MAX	C MIN	D	E	F	G	K (tube insert length)	Opposite face of hexagon
SC3W-M3-3-P7*	ø3.2	M3 × 0.5	2.4	11.4	27.6	25.1	7.4	5	7.5	15.5	11.7	7
SC3W-M3-4-P7*	ø4	M3 × 0.5	2.4	11.4	27.6	25.1	7.4	5	8.8	16.6	12.9	7
SC3W-M5-3-P7*	ø3.2	M5 × 0.8	3.4	12.4	30.6	27.2	9.6	6	7.5	16.0	11.7	8
SC3W-M5-4-P7*	ø4	M5 × 0.8	3.4	12.4	30.6	27.2	9.6	6	8.8	17.2	12.9	8
SC3W-M5-6-P7*	ø6	M5 × 0.8	3.4	12.4	30.6	27.2	9.6	6	10.8	18.8	14.0	8

● SC3W- 6/8/10/15 -*-P7* (same as low speed type, standard (SC3W-6))

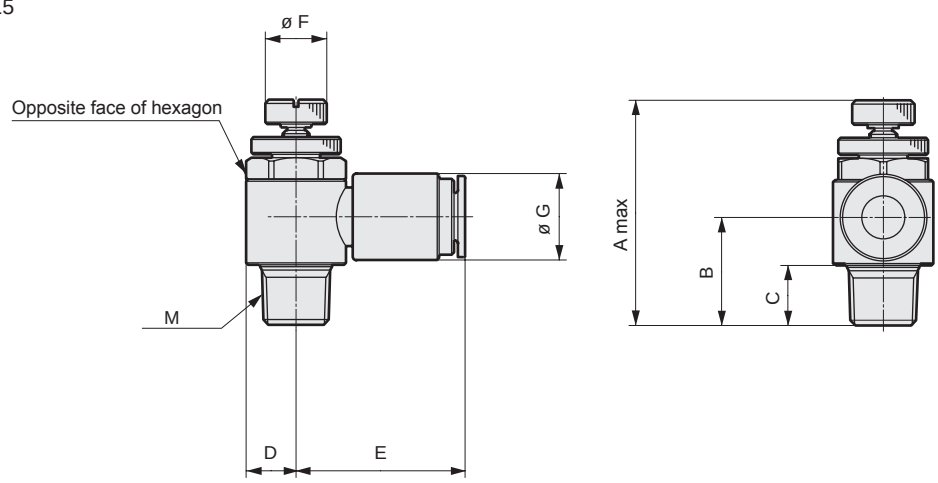

Model No.	M	Applicable tube O.D.	A	B	C	D	E	F	G	Opposite face of hexagon
SC3W-6-4-P7*	R1/8	ø4	38.4	16.2	8	7.3	23.1	9	10.0	13
SC3W-6-6-P7*		ø6	38.4	15.7	8	7.3	24.1	9	12.5	13
SC3W-6-8-P7*		ø8	38.4	15.4	8	7.3	25.3	9	14.5	13
SC3W-8-6-P7*	R1/4	ø6	51.2	25.0	11	9.5	27.2	12	13.8	17
SC3W-8-8-P7*		ø8	51.2	25.0	11	9.5	28.5	12	16.3	17
SC3W-8-10-P7*		ø10	51.2	24.0	11	9.5	32.0	12	19.3	17
SC3W-10-6-P7*	R3/8	ø6	52.4	23.1	12	11.3	28.3	14	12.5	19
SC3W-10-8-P7*		ø8	60.2	30.0	12	11.3	30.3	14	16.3	19
SC3W-10-10-P7*		ø10	60.2	30.0	12	11.3	33.8	14	19.3	19
SC3W-10-12-P7*		ø12	60.2	29.3	12	11.3	37.8	14	21.3	19
SC3W-15-10-P7*	R1/2	ø10	66.7	33.8	15	13.5	36.0	16	19.3	24
SC3W-15-12-P7*		ø12	66.7	33.8	15	13.5	40.0	16	21.3	24

MEMO

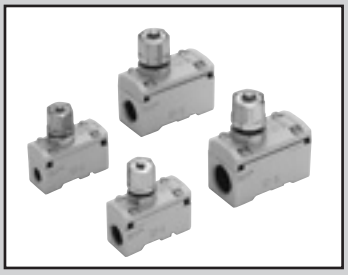

Speed controller Medium port size

SC1 Series

Lightweight enables disassembly while piped.

● Port size: Rc1/8 to Rc1/2

JIS symbol

RoHS CAD

Structure and material restriction

	Structure/treatment	Material restriction			Model No.
P7 Series	Dust generation preventing				– P70
	Dust generation preventing	Copper-based materials prohibited	Silicon-based materials prohibited	Halogen-based materials prohibited (fluorine, chlorine, bromine)	– P74

Specifications

Descriptions			SC1-6	SC1-8	SC1-10	SC1-15
Working fluid			Compressed air			
Max. working pressure		MPa	1.0			
Min. working pressure		MPa	0.05			
Proof pressure		MPa	1.5			
Fluid temperature		°C	5 to 60 (no freezing. *2) (5°C to 120°C for heat resistance/ozone proof specifications)*3			
Ambient temperature		°C	0 to 60 (no freezing) (5°C to 120°C for heat resistance/ozone proof specifications)*4			
Port size		Rc	1/8	1/4	3/8	1/2
Weight		g	100	95	205	195
Applicable cylinder bore size		mm	ø20 to ø50	ø32 to ø75	ø50 to ø140	ø80 to ø160
Dial indicator value			10	10	10	10
Free flow	Flow rate	ℓ/min (ANR)	730	930	2600	2900
	Effective cross-sectional area	mm^2	11	14	39	43
Controlled flow	Flow rate	ℓ/min (ANR)	530	870	1500	2400
	Effective cross-sectional area	mm^2	8	13	22	36

*1: Flow rate is the atmospheric pressure conversion at 0.5 MPa.
*2: Freezing could occur by adiabatic expansion depending on air quality (dew point).
*3: 5 to 60 , [5 to 120 (248°F) for heat resistance/ozone proof specifications]
*4: 0 to 60 , [5 to 120 (248°F) for heat resistance/ozone proof specifications]

How to order

SC1 – 6 – P70

Ⓐ Port size

Ⓑ Clean room specifications

Code	Content
Ⓐ Port size	
6	Rc1/8
8	Rc1/4
10	Rc3/8
15	Rc1/2

Ⓑ Clean room specifications		
	Structure/ treatment	Material restriction
P70	Dust generation preventing	-
P74	Dust generation preventing	Copper-based/silicon-based/ halogen-based materials (fluorine, chlorine, bromine) are prohibited

Flow characteristics

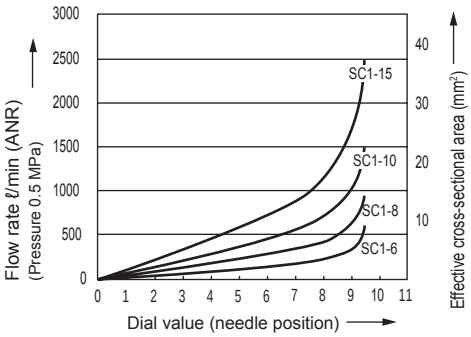

Dimensions

● SC1-*-P7*

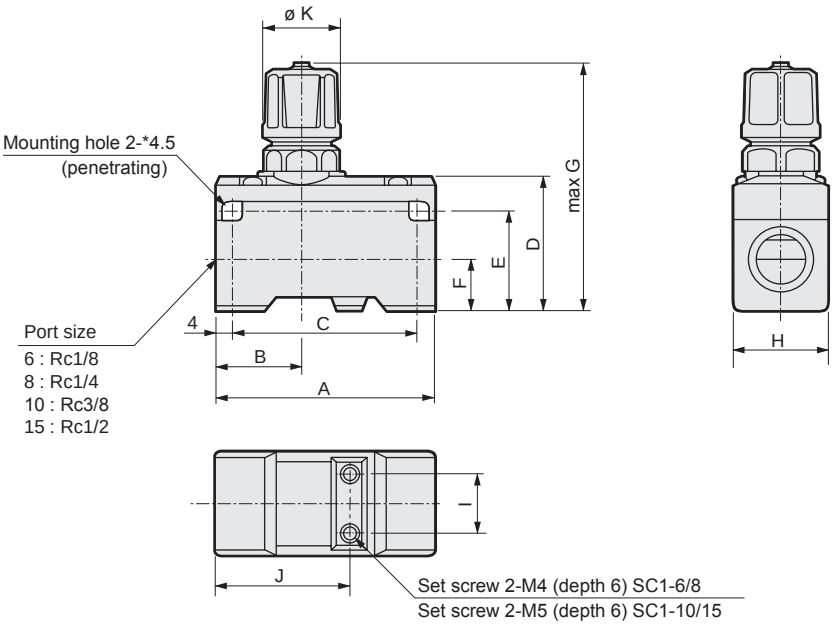

Model No.	A	B	C	D	E	F	G	H	I	J	K
SC1-6/8-P7*	50	20	42	31	23	11	67	22	12	31	19
SC1-10/15-P7*	63	21	55	40	31	15	83	30	18	37	23

⚠ Safety precautions

● When operating in the low pressure range (0.05 MPa or less), or when the piping, etc., before and after the product are excessively constricted, note that vibrating sounds can be easily generated if the cylinder speed is rapid, or if the differential pressure is small.

● When tightening, do not tighten needle or lock nut section excessively. (Tightening torque approx. 3 N·m)

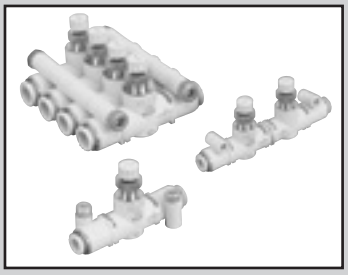

Speed controller inline with push-in fitting

SCL2 Series

In-out speed controller inline with push-in fitting

SCD2 Series

● Port size: ø1.8/ø4/ø6/ø8/ø10/ø12

JIS symbol

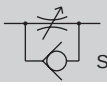

SCL2 Series

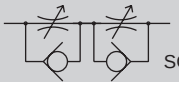

SCD2 Series

RoHS CAD

Structure and material restriction

	Structure/treatment	Material restriction			Model No.
P7 Series	Dust generation preventing				– P70
	Dust generation preventing	Copper-based materials prohibited	Silicon-based materials prohibited	Halogen-based materials prohibited (fluorine, chlorine, bromine)	– P74

Specifications

● Speed controller inline SCL2

Model No.		SCL2-04			SCL2-06	SCL2-08		SCL2-10		
Applicable tube O.D.	mm	ø1.8	ø1.8/ø4	ø4	ø6	ø6	ø8	ø8	ø10	ø12
Working fluid		Compressed air								
Max. working pressure	MPa	0.7		1.0						
Min. working pressure	MPa	0.1								
Proof pressure	MPa	1.05		1.5						
Fluid temperature	°C	5 to 60 (no freezing *3)								
Ambient temperature	°C	0 to 60 (no freezing)								
Weight	g	13	12	11.5	16	32	33	53	57	59
Dial indicator value		12 (15)								
Free flow	Flow rate ℓ/min (ANR)	(13)		130	300	400	550	900	1100	1200
	Effective cross-sectional area mm^2	(0.2)		1.9	4.5	6	8	13.5	16.5	18
Controlled flow	Flow rate ℓ/min (ANR)	(10)		130 (13)	300 (13)	400	550	900	1100	1200
	Effective cross-sectional area mm^2	(0.15)		1.9 (0.2)	4.5 (0.2)	6	8	13.5	16.5	18

● In-out speed control valve inline SCD2

Model No.		SCD2-04			SCD2-06	SCD2-08		SCD2-10		
Applicable tube O.D.	mm	ø1.8	ø1.8/ø4	ø4	ø6	ø6	ø8	ø8	ø10	ø12
Working fluid		Compressed air								
Max. working pressure	MPa	0.7		1.0						
Min. working pressure	MPa	0.1								
Proof pressure	MPa	1.05		1.5						
Fluid temperature	°C	5 to 60 (no freezing *3)								
Ambient temperature	°C	0 to 60 (no freezing)								
Weight	g	23	22	21.5	29	63	64	108	112	114
Dial indicator value		12 (15)								
Flow rate	ℓ/min (ANR)	(10)	(10)	100 (13)	250 (13)	330	400	750	850	900
Effective cross-sectional area	mm^2	(0.15)	(0.15)	1.5 (0.2)	3.7 (0.2)	5	6	11	12.5	13

*1: Flow rate is the atmospheric pressure conversion at 0.5 MPa.
*2: Values in ( ) are for the fine speed type.
*3: Freezing could occur by adiabatic expansion depending on air quality (dew point).

How to order

● Speed controller inline

SCL2 - 04 - H44 - ◯ - P70

● In-out speed control valve inline

SCD2 - 04 - H44 - ◯ - P70

Model No.

Ⓐ Body size

Ⓑ Applicable tube O.D.

Refer to the following tables for combinations of Ⓐ, Ⓑ, Ⓒ.

Ⓒ Flow characteristics

Ⓓ Clean room specifications

Code	Content
Ⓐ Body Size	
04	M5 thread equivalent
06	1/8 thread equivalent
08	1/4 thread equivalent
10	3/8 thread equivalent
Ⓑ Applicable tube O.D.	
H22	ø1.8
H42	Side A: ø4, Side B: ø1.8
H24 *1	Side A: ø1.8, Side B: ø4
H44	ø4
H66	ø6
H88	ø8
H1010	ø10
H1212	ø12
Ⓒ Flow characteristics	
Blank	Standard
F	Fine speed

Ⓓ Clean room specifications		
	Structure	Material restriction
P70	Dust generation preventing	-
P74	Dust generation preventing	Copper-based/silicon-based/halogen-based materials (fluorine, chlorine, bromine) are prohibited

Combinations of Ⓐ, Ⓑ, Ⓒ

Applicable tube O.D. Ⓑ	Ⓐ Body size 04	06	08	10
H22	○			
H42	○			
H24 *1	○			
H44	○●			
H66		●○	●	
H88			●	●
H1010				●
H1212				●

● Ⓒ Flow characteristics "standard"
○ Ⓒ Flow characteristics "fine speed"

Not available.

⚠ Precautions for model No. selection

*1: H24 is not available for SCD2.
Select H42 instead.

Ⓑ Illustration of combination of applicable tube O.D. (H24/H42 only)

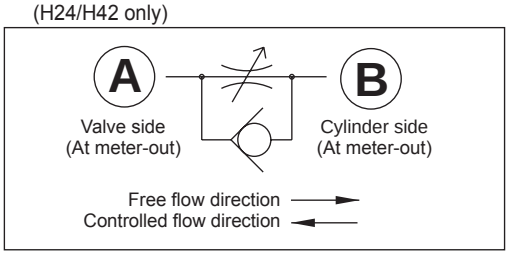

Flow characteristics

● Standard

・SCL2-$^{04}_{06}$, SCD2-$^{04}_{06}$

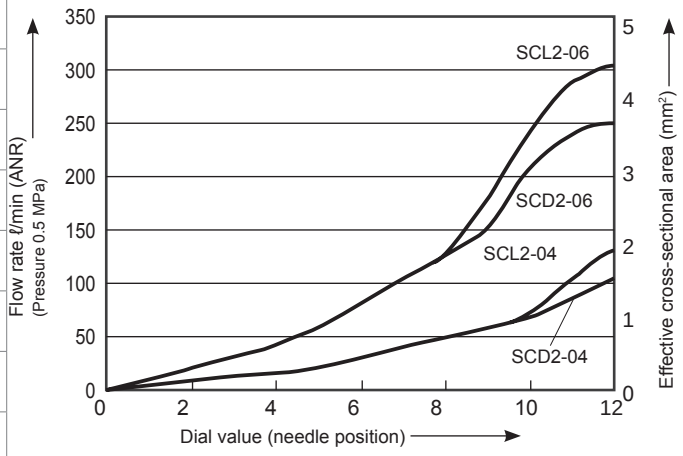

・SCL2-08, SCD2-10

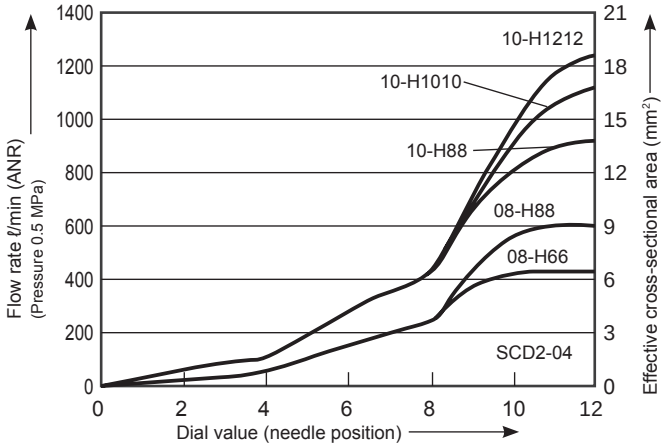

・SCD2-08, SCD2-10

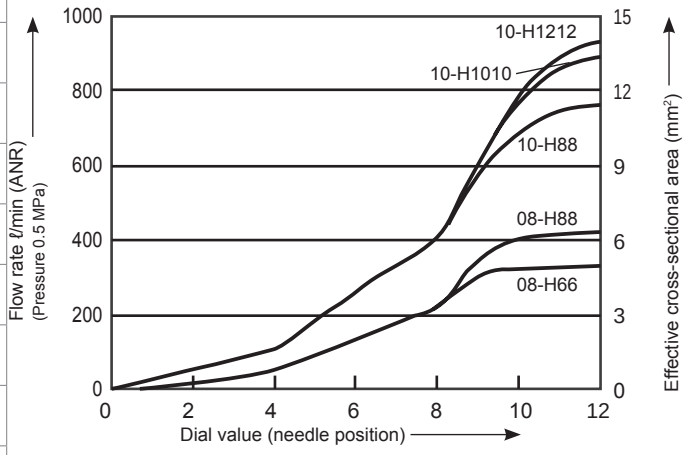

● Fine speed

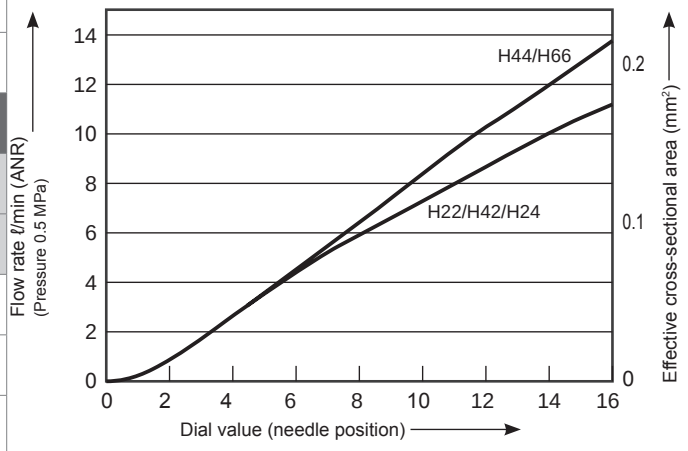

Dimensions

● SCL2 Series

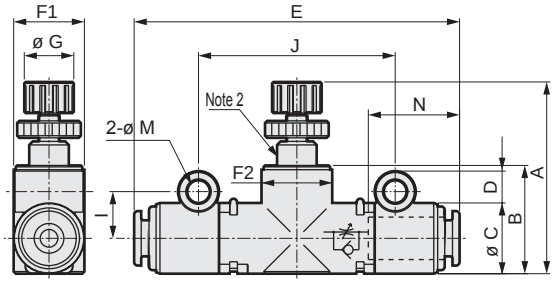

● SCD2 Series

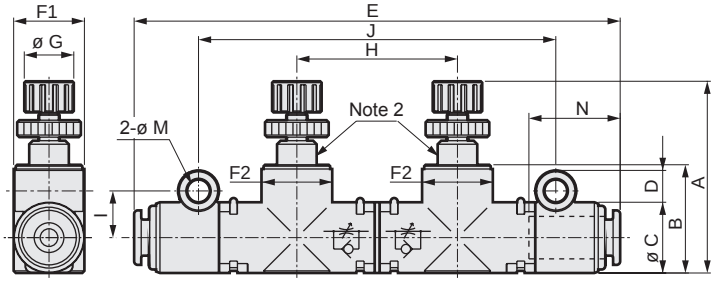

● Installation spacing dimensions for manifolds

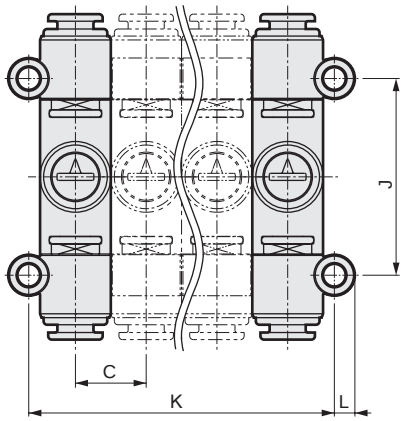

● Outline drawing of outer tubing connection diameter ø1.8 fitting

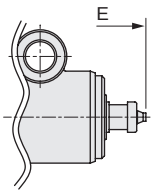

Model No.	Piping size O.D.	A MIN	A MAX	B	C	D	E	F1	F2	G	H	I	J	K	L	M (Mounting hole)	N (tube insert length)
SCL2-04-H22-P7* Note 1	ø1.8	27.1	31.6	15.3	10	4.5	50.8	10	10.6	7	-	6.6	27.8	10 × n + 3.2	2.9	3.3	-
SCL2-04-H42-P7* Note 1	ø4/ø1.8						48.4										12.9/-
SCL2-04-H24-P7* Note 1	ø1.8/ø4						48.4										-/12.9
SCL2-04-H44-P7*	ø4						46										12.9
SCL2-06-H66-P7*	ø6	28.8	33.3	17.7	12	5.6	49.4	12	12.2	7	-	8.1	30.8	12 × n + 4.2	3.5	4.3	13.7
SCL2-08-H66-P7*	ø6	38	44.5	22.9	15	5.6	64	15	15.5	11	-	9.5	41	15 × n + 4	3.6		18
SCL2-08-H88-P7*	ø8						66.5										19
SCL2-10-H88-P7*	ø8	44	50.5	29.7	20	5.1	71	20	20.5	11	-	11.5	47	20 × n + 3			19
SCL2-10-H1010-P7*	ø10						75										21
SCL2-10-H1212-P7*	ø12				20.4	4.9	79							20.4 × n + 3			22
SCD2-04-H22-P7* Note 1	ø1.8	27.1	31.6	15.3	10	4.5	73.5	10	10.6	7	22.7	6.6	50.5	10 × n + 3.2	2.9	3.3	-
SCD2-04-H42-P7* Note 1	ø4/ø1.8						71.1										12.9/-
SCD2-04-H44-P7*	ø4						68.7										12.9
SCD2-06-H66-P7*	ø6	28.8	33.3	17.7	12	5.6	73.9	12	12.2	7	24.5	8.1	55.3	12 × n + 4.2	3.5	4.3	13.7
SCD2-08-H66-P7*	ø6	38	44.5	22.9	15	5.6	97.5	15	15.5	11	34	9.5	75	15 × n + 4	3.6		18
SCD2-08-H88-P7*	ø8						100										19
SCD2-10-H88-P7*	ø8	44	50.5	29.7	20	5.1	111	20	20.5	11	40.5	11.5	87.5	20 × n + 3			19
SCD2-10-H1010-P7*	ø10						115										21
SCD2-10-H1212-P7*	ø12				20.4	4.9	119							20.4 × n + 3			22

Note 1: Connection tubing is a fitting dedicated to fiber tube.
Note 2: There is a slit at this location on the fine speed type.
Note 3: F1 and F2 dimensions are oval.

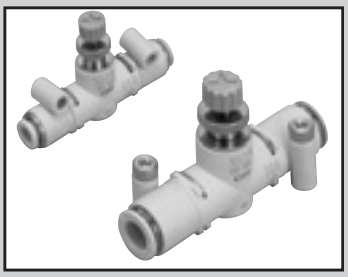

Needle valve, inline with push-in fitting

SCL2-N Series

JIS symbol

RoHS CAD

Structure and material restriction

	Structure/treatment	Material restriction			Model No.
P7 Series	Dust generation preventing				– P70
	Dust generation preventing	Copper-based materials prohibited	Silicon-based materials prohibited	Halogen-based materials prohibited (fluorine, chlorine, bromine)	– P74
P8 Series	Oil prohibited				– P80

Specifications

Model No.		SCL2-N-04	SCL2-08	SCL2-10	
Applicable tube O.D.	mm	ø4	ø6	ø6	ø8
Working fluid		Compressed air/N_2 gas			
Max. working pressure	MPa	1.0			
Negative pressure	kPa	-100 kPa			
Proof pressure	MPa	1.5			
Fluid temperature	°C	5 to 60 (no freezing *)			
Ambient temperature	°C	0 to 60 (no freezing)			
Weight	g	11.5	16	32	33
Dial rotations		12 (15 rotation for the flow rate type 010)			

*: Freezing could occur by adiabatic expansion depending on air quality (dew point).

Flow characteristics

Flow rate code	010	050	150	300
Max. flow rate (at 0.5 MPa) ℓ/min (ANR)	13	50	150	300
Effective cross-sectional area mm^2	0.2	0.7	2.2	4.5

Note: The flow is atmospheric pressure conversion at pressure 0.5 MPa.

Flow characteristics

・Flow rate "010"

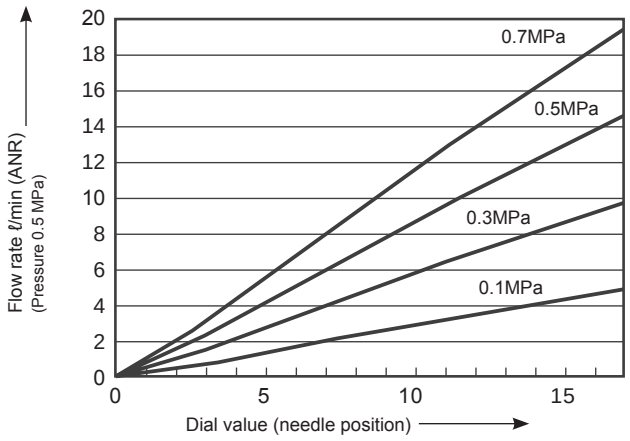

・Flow rate "050"

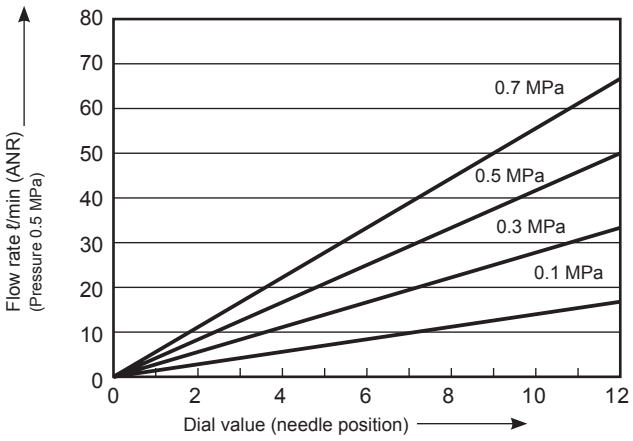

How to order

SCL2-N - 04 - H44 - 010 - P80

Model No.

Ⓐ Body size

Ⓑ Applicable tube O.D.

Refer to the table below for the body size and applicable tube O.D. combination.

Ⓒ Flow rate

Ⓓ Clean room specifications *1

Code	Content
Ⓐ Body Size	
04	M5 thread equivalent
06	1/8 thread equivalent
08	1/4 thread equivalent
Ⓑ Applicable tube O.D.	
H44	ø4
H66	ø6
H88	ø8

Ⓒ Flow characteristics

	Max. flow rate (at 0.5 MPa) ℓ/min (ANR)	Effective cross-sectional area mm²
010	13	0.2
050	50	0.7
150	150	2.2
300	300	4.5

Ⓓ Clean room specifications

	Structure/treatment	Material restriction
P70	Dust generation preventing	-
P74	Dust generation preventing	Copper-based/silicon-based/halogen-based materials (fluorine, chlorine, bromine) are prohibited
P80	Oil prohibited	-

*1: P80 Series
● Metal material..... Brass + electroless nickeling
● Sealant material ..... Nitrile rubber (NBR)
● Without grease..... Grease is not used as this is oil-prohibited specifications.
For this reason, it is same product as P84 Series.
Specify in P80 Series when placing an order.

Combination of body size, applicable tube O.D., and flow rate

		Ⓐ Body size Ⓑ Applicable tube O.D.			
		04-H44	06-H66	08-H66	08-H88
Ⓒ Flow rate	010	●	●		
	050	●	●		
	150		●		
	300			●	●

Not available.

Flow characteristics

・Flow rate "150"

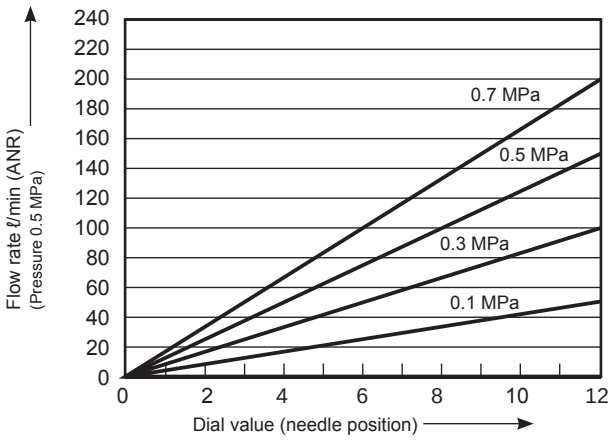

・Flow rate "300"

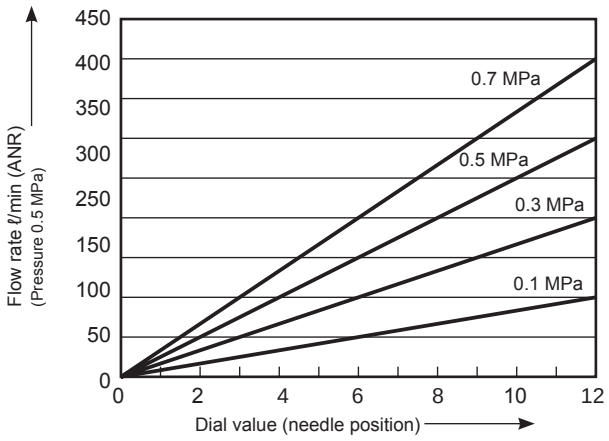

SCPD3
SCM
SSD2
MDC2
SMG
LCM
LCR
LCG
LCX
STM
STG
STR2
MRL2
GRC
Cylinder switch
MN3E MN4E
4GA/B
M4GA/B
MN4GA/B
F.R (module unit)
Clean F.R
Precision R
Press gauge Diff. press gauge
Electro-pneumatic R
Speed controller
Auxiliary valve
Fitting/ tube
Clean air unit
Pressure sensor
Flow rate sensor
Valve for air blow
Ending

Dimensions

● SCL2-NSeries

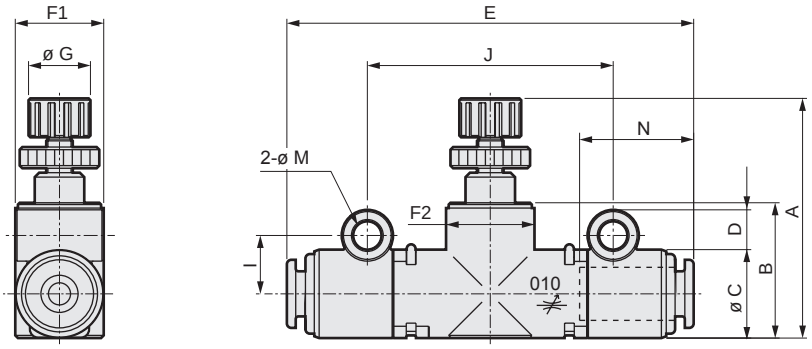

Model No.	Piping size O.D.	A MIN	A MAX	B	C	D	E	F1	F2	G	I	J	K	L	M (Mounting hole)	N (tube insert length)
SCL2-N-04-H44-***-P**	ø4	27.1	31.6	15.3	10	4.5	46	10	10.6	7	6.6	27.8	10 × n + 3.2	2.9	3.3	12.9
SCL2-N-06-H66-***-P**	ø6	28.8	33.3	17.7	12	5.6	49.4	12	12.2	7	8.1	30.8	12 × n + 4.2	3.5	4.3	13.7
SCL2-N-08-H66-***-P**	ø6	38	44.5	22.9	15	5.6	64	15	15.5	11	9.5	41	15 × n + 4	3.8		18
SCL2-N-08-H88-***-P**	ø8						66.5									19

* F1 and F2 dimensions are oval.

* Can be distinguished from a speed controller with the color of the knob.
  Speed controller ... White knob
  Needle valve ..... Gray knob
* The fitting push ring is blue for option P80 (oil-prohibited specifications).

Design & selection

⚠CAUTION

- Do not use this valve in circuits where ozone is generated intentionally.
  Ozone resistance is sufficient for naturally generated ambient ozone. Packing deteriorates if ozone levels are high.
- This valve cannot be used as a stop valve that has no leakage. Slight leakage is allowed in product specifications.
- Not all of the needle valve's resin parts are flameresistant.
- The flow path in the needle valve is not completely free of dust generation. A final clean filter should be used in circuits where dust generation could be a problem.

Mounting / Installation / adjustment

⚠CAUTION

- Rotate the mounting hole section at no pressurized state.
- When installing on a panel, the stopper ring interferes with the panel, so insert a flat washer between the mounting hole and panel.

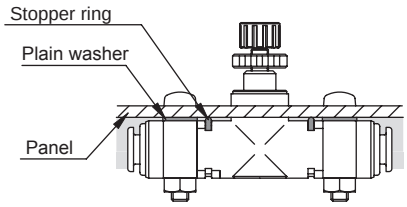

- Tighten bolts in mounting holes within the torque below.

Model No.	Tightening torque
SCL (D) 2-04	0.5 N·m
SCL (D) 2-06/08/10	0.8 N·m

- As tubing may be dislocated due to product oscillation or torsion, fix the product with bolts or Insulok ties, etc., when piping.
- Do not turn the dial with force when fully opening or closing the dial (0.05 N·m or less). Do not use the lock nut to adjust the needle. Otherwise this could cause needle galling or damage.
- Tightening the lock nut excessively can cause problems. Do not use a torque higher than what is indicated in the following table.

Model No.	Tightening torque
SCL (D) 2-04/06	0.2 N·m
SCL (D) 2-08/10	0.3 N·m

- The adjustment knob of "P80 (oil-prohibited specifications)" option may be slightly hard to turn.
- There is no direction for needle valve piping.
- Connect fiber tube (1.8 diameter fitting) as follows ((1) to (5)):

(1) Set the collar at the very back.

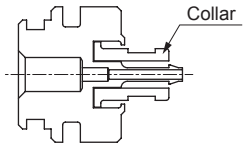

(2) Cut the end of fiber tube at a right angle.

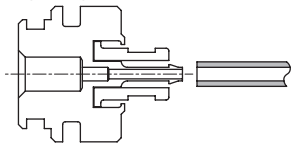

(3) Pass the collar through, and confirm that the fiber tube is correctly inserted while carrying out the work.

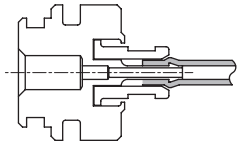

(4) Insert fiber tube to the last position.

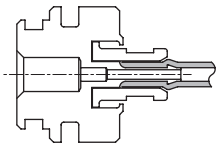

(5) Pull the collar forward to lock it.

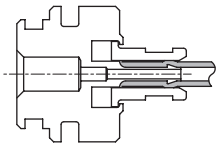

SCPD3
SCM
SSD2
MDC2
SMG
LCM
LCR
LCG
LCX
STM
STG
STR2
MRL2
GRC
Cylinder switch
MN3E MN4E
4GA/B
M4GA/B
MN4GA/B
F.R (module unit)
Clean F.R
Precision R
Press gauge Diff. press gauge
Electro-pneumatic R
Speed controller
Auxiliary valve
Fitting/ tube
Clean air unit
Pressure sensor
Flow rate sensor
Valve for air blow
Ending

Example of in-out speed controller

1 Speed is stabilized by controlling with an in-out speed controller.

(Example 1) In low-speed control with a single rod cylinder, the cylinder pops out immediately after the PUSH side operates if a meter-out circuit is used.

(Example 2) At vertical mounting, the cylinder pops out immediately after actuation because of the load's weight. Speed is stabilized by using a meter in-out circuit.

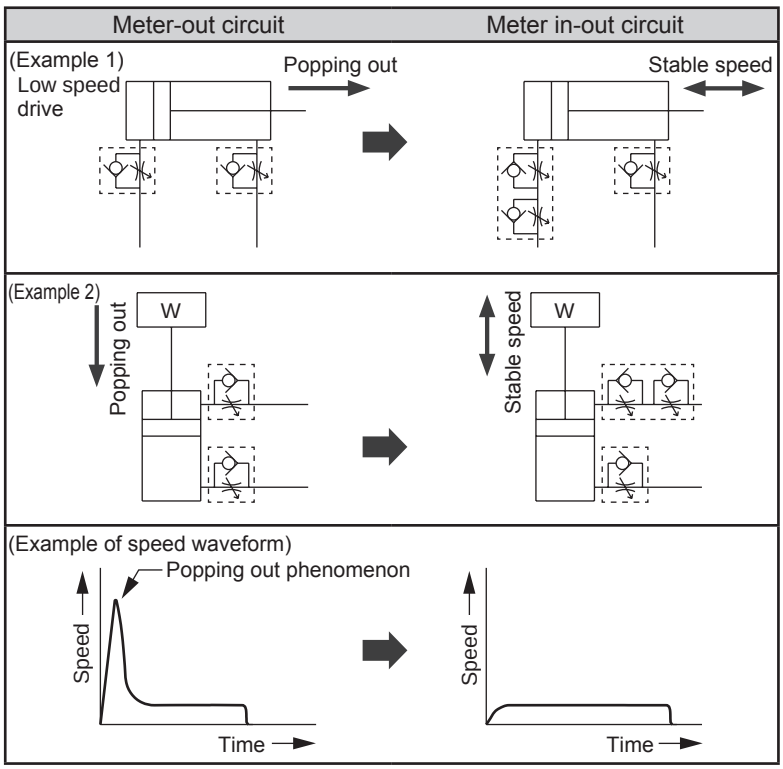

(Cause of popping out phenomenon)
When using the meter-out circuit, flow on the exhaust side is restricted, so both sides reach the same pressure immediately after the valve is switched.
The thrust equivalent to the difference in the piston's pressurized area or the thrust equivalent to the load's weight causes popping out.
When the piston moves, exhaust pressure rises, speed decelerates, and the set speed is reached.
If popping out is caused by this phenomenon, fluctuation in sudden thrust is suppressed by restricting the flow on the supply side, and popping out is resolved.

2 Danger can be prevented by suppressing popping out at beginning of movement after residual pressure is released.

3 Reciprocating speed control is possible with a single acting cylinder.

Pneumatic components (speed controller)

Safety Precautions

Always read this section before use.

Design & selection

⚠WARNING

■ Do not constantly push down or apply a load onto the push-ring of the push-in fitting.
- The tube may lose its ability to hold.
- When transporting an assembled product, avoid positions in which the push ring is constantly pressed down.

⚠CAUTION

■ Use the product in the range of conditions specified for the product.
Contact CKD when using the product for special applications.
- Use with exceeding the specifications range may result in insufficient performance, and safety cannot be secured.
- This product may not be usable in special applications and environments.
For example, use for applications requiring safety, including nuclear energy, railways, aircraft, vehicles, medical devices, devices in contact with beverages or foodstuffs, amusement devices, emergency cutoff circuits, press machines, brake circuits, or safety devices or applications.

■ Confirm that the product withstands the working environment.
- This product cannot be used in environments where functional obstacles could occur.
Such environments include high temperature, chemical atmosphere, or where chemical, vibration, moisture, water drip or gas is present. Environment where ozone is generated.
- Do not use the product in the place that the product could directly contact with coolant or spatter, etc.

■ Understand compressed air features before designing a pneumatic circuit.
- The same functions as mechanical, hydraulic, and electrical methods cannot be anticipated if instantaneous service interruption and holding are required during an emergency stop.
- Pop-out, air discharge, or leakage due to air compression and expansion could occur.

■ This valve cannot be used as a stop valve that has no leakage. Slight leakage is allowed in product specifications.

■ Install a "pressure switch" and "shut-off valve" on the device's compressed air supply side.
- The pressure switch will disable operation until set pressure is reached.
The residual pressure exhaust-valve will exhaust compressed air in the pneumatic pressure circuit, and will prevent accidents caused by operation of pneumatic components by residual pressure.

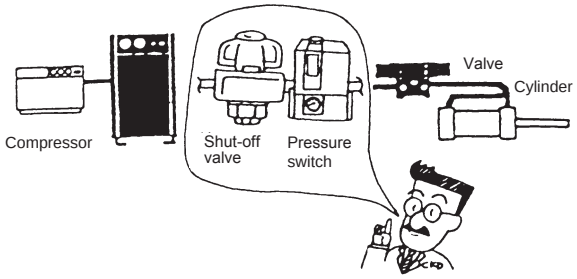

■ Indicate the maintenance conditions in the device's instruction manual.
- The product's performance may drop too low to maintain an appropriate safety level depending on usage conditions, working environment and maintenance status. With correct maintenance, the product functions can be used to the fullest.

■ Contact CKD if ozone could occur in supplied air. (Ozone proof products are available.)

■ Rubber parts deteriorate and life is shortened if ultra dry air is used.

Mounting / Installation / adjustment

Piping

⚠CAUTION

■ Open the package in a clean room.
- The products are wrapped in an antistatic sheet before packaged in a box. If you install the product in a clean room, we recommend you to take it out of the box outside the clean room before you bring it in and to open the package in the clean room.

■ When connecting pipes, wrap sealing tape in the opposite direction from threads starting 2 mm inside from the end of piping threads.
- If sealing tape protrudes from pipe threads, it could be cut when screwed in. This could cause the tape to enter the pneumatic components and lead to faults.

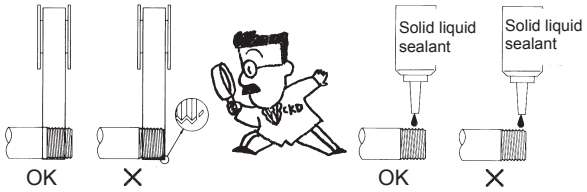

■ M3 and M5 screws are sealed with the gasket.

■ Handling push-in fittings and tubes.
- Refer to WARNING of fitting and tube, and "Safety Precautions" (pages 992 to 994) for handling push-in fittings and tubes.

■ Always flush just before piping pneumatic component.
- Any foreign matter that has entered during piping must be removed so it does not enter the pneumatic component.

■ When supplying compressed air for the first time after connecting pipes, do not apply high pressure suddenly.
- Piping connection could be dislocated or the piping tube jump about leading to accidents.

■ After connecting pipes, check pipe connections for air leaks before supplying compressed air.
- Apply a leakage detection agent on pipe connections with a brush, and check for air leaks.

■ Apply recommended tightening torque when connecting pipes.
- To prevent air leak and to protect threads from damage.
- First tighten the screw by hand to prevent threads are not damaged, then use a tool.
- Do not tighten while pressure is applied.

(Recommended tightening torque)

Port thread	Tightening torque N·m
M3	0.3 to 0.6
M5	1.0 to 1.5
Rc1/8	3 to 5
Rc1/4	6 to 8
Rc3/8	13 to 15
Rc1/2	16 to 18

■ Connect piping so that connections are not dislocated by system movement, vibration, or tension, etc.
- Control of actuator speed will be disabled if piping on the exhaust face of the pneumatic circuit is disengaged.
- When using the chuck holding mechanism, the chuck will be released creating a hazardous state.

■ Ensure ample room around the pneumatic component for installation, removal, wiring, and piping work.

■ Install an air filter just before the pneumatic component in the circuit.

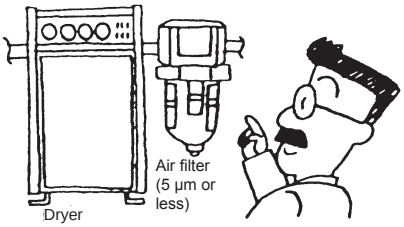

■ Check that lock nuts are not loose.
- Actuator speed cannot be controlled if the lock nut is loose.

■ Check the needle valve dial indicator.
- Turning the dial excessively could result in damage although the needle valve has dislocation prevention. Check the number of turns for the product used.

■ Confirm the flow direction.
- If the product is installed in reverse, speed adjustment will not function and the actuator pop out, posing hazards.

■ Fully close the needle, and open to adjust speed.
- If the needle is opened, the actuator could pop out suddenly and pose a danger. Only open the needle after confirming that it is fully closed. Be sure that it is closed and then open it.
- The needle closes when turned to the right and opens when turned to the left.

■ Avoid use in applications involving continuous turning or swaying.
● Joints could be damaged.

■ Avoid using this product in places with high vibration or impact.

During use & maintenance

⚠ WARNING

■ Stop air flow and confirm that there is no residual pressure before replacing the tube.

MEMO

Auxiliary valve
(Check valve/quick valve)

Pneumatic auxiliary components

CONTENTS

- Compact check valve with push-in fitting (CHL) 930
- Check valve (CHV2) 932
- Quick valve (2QV) 934

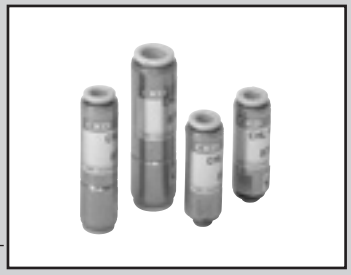

Compact check valve with push-in fitting

CHL Series

Compact/space saving inline for vacuum retention and low pressure use.

JIS symbol

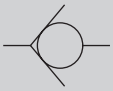

RoHS CAD

Structure and material restriction

	Structure/treatment	Material restriction			Model No.
P7 Series	Dust generation preventing				– P70
	Dust generation preventing	Copper-based materials prohibited	Silicon-based materials prohibited	Halogen-based materials prohibited (fluorine, chlorine, bromine)	– P74

Specifications

Descriptions		CHL-M54	CHL-H44	CHL-H66
Working fluid		Air		
Max. working pressure	MPa	1.0		
Min. working pressure	MPa	0.03		
Cracking pressure	MPa	0.03		
Working pressure range (negativepressure)	kPa	-30 kPa to -100 kPa		
Proof pressure	MPa	1.5		
Fluid temperature	°C	0 to 60 (no freezing)		
Ambient temperature	°C	0 to 60 (no freezing)		
Port size		M5	ø4	ø6
Weight	g	8.9	10.8	16.6
Applicable tube O.D.		ø4	ø4	ø6
Flow rate	ℓ/min (ANR)	170	180	440
Effective cross-sectional area	mm^2	2.6	2.8	6.8

* Flow rate is the atmospheric pressure conversion value at pressure 0.5 MPa.

How to order

CHL – M5 4 – A – P70

Model No. (CHL); Ⓐ (M5); Ⓑ (4); Ⓒ (A); Ⓓ (P70)

M54 type only

Ⓐ Port size		Ⓑ Applicable tube O.D.	
M5	M5	4	ø4
H4	ø4	4	ø4
H6	ø6	6	ø4

* Combinations other than listed above are not possible.

Ⓒ Free flow	
A	M5 screw side input
B	M5 screw side output

Ⓓ Clean room specifications		
	Structure/treatment	Material restriction
P70	Dust generation preventing	-
P74	Dust generation preventing	Copper-based/silicon-based/halogen-based materials (fluorine, chlorine, bromine) are prohibited

About Ⓒ free flow (M54 type only)

Free flow A (M5 screw side input)

Free flow B (M5 screw side output)

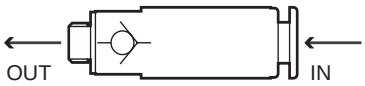

Dimensions

● CHL−M54-*-P7*

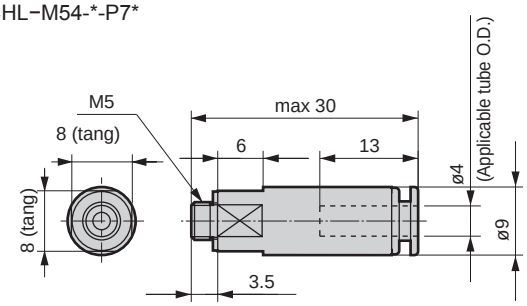

● CHL-H44-P7*

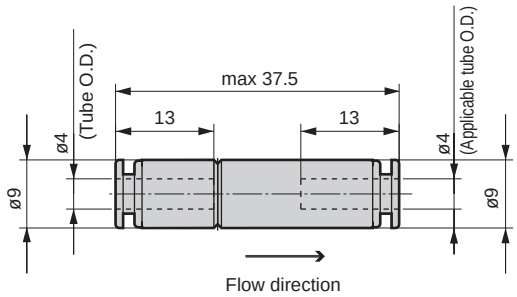

● CHL-H66-P7*

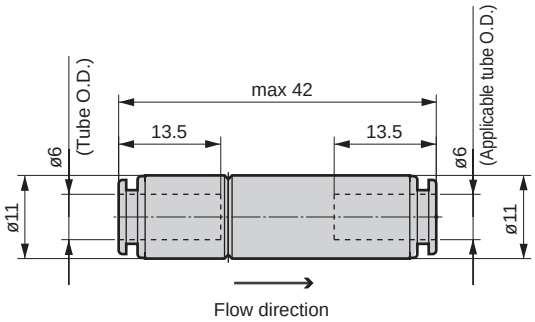

Check valve

CHV2 Series

● Port size: Rc$^1/_8$ to Rc1$^1/_2$

JIS symbol 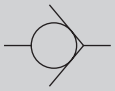

RoHS CAD

Structure and material restriction

	Structure/treatment	Material restriction			Model No.
P7 Series	Dust generation preventing				– P70
	Dust generation preventing	Copper-based materials prohibited	Silicon-based materials prohibited	Halogen-based materials prohibited (fluorine, chlorine, bromine)	– P74
P8 Series	Oil-prohibited				– P80

Specifications

Descriptions	CHV2-6	CHV2-8-J	CHV2-8	CHV2-10-J	CHV2-10	CHV2-15	CHV2-20	CHV2-25	CHV2-32	CHV2-40
Working fluid	Compressed air									
Max. working pressure MPa	1.0									
Min. working pressure MPa	0.03									
Proof pressure MPa	1.5									
Cracking pressure MPa	0.02									
Fluid temperature °C	5 to 60									
Ambient temperature °C	0 to 60 (no freezing)									
Port size Rc	1/8	1/4		3/8		1/2	3/4	1	1 $^1/_4$	1 $^1/_2$
Weight g	47		81		140		265		875	
Effective cross-sectional area mm^2	28		55	60	94	110	220	250	700	730

How to order

CHV2 - 8 - J - A - P70

Model No.

Ⓐ Port size

Compact, small flow rate *1

Ⓑ Option

Ⓒ Clean room specifications

*1: Compact, small flow rate (J) is applicable only for port size Rc1/4 (8) and Rc3/8 (10).

Code	Content
Ⓐ Port size	
6	Rc1/8
8	Rc1/4
10	Rc3/8
15	Rc1/2
20	Rc3/4
25	Rc1
32	Rc1 $^1/_4$
42	Rc1 $^1/_2$
Ⓑ Option	
Blank	No option
A	Fluoro rubber specifications

Ⓒ Clean room specifications

	Structure/treatment	Material restriction
P70	Dust generation preventing	-
P74	Dust generation preventing	Copper-based/silicon-based/halogen-based materials (fluorine, chlorine, bromine) are prohibited
P80	Oil-prohibited	-

* 1: P80 Series
● Metal material ····· Brass is not used.
● Sealant material ····· Nitrile rubber (NBR)
● Without grease ····· Grease is not used as this is oil-prohibited specifications.
For this reason, it is same product as P84 Series.
Specify in P80 Series when placing an order.

Operational principle

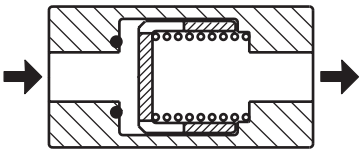

If pressurized from arrow direction on the side body, the valve fully opens, allowing free flow.

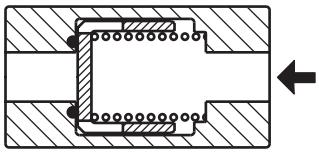

If pressurized from reverse direction of arrow on the side body, the valve closes and flow is interrupted.

Dimensions

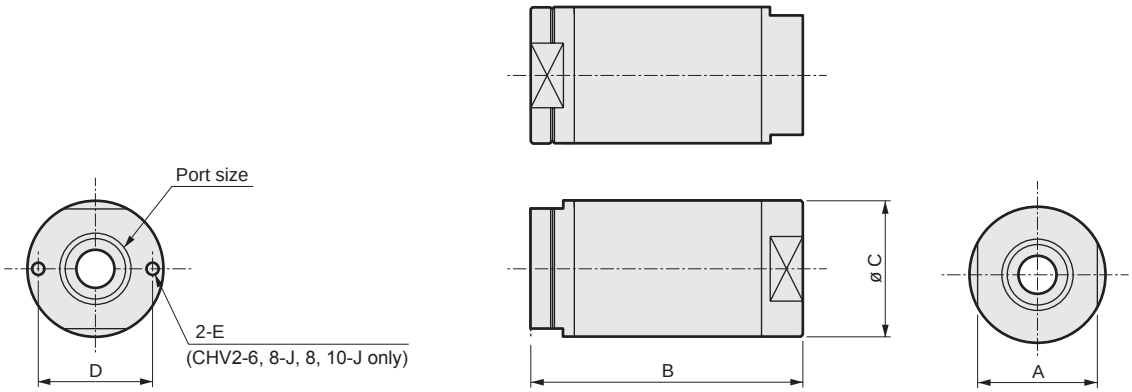

Model No.	Port size	A	B	ø C	D	E
CHV2-6-P**	Rc1/8	22	50	25	21	M2.5
CHV2-8-J-P**	Rc1/4					
CHV2-8-P**		27	60	31	26	M3
CHV2-10-J-P**	Rc3/8					
CHV2-10-P**		32	75	38	-	-
CHV2-15-P**	Rc1/2					
CHV2-20-P**	Rc3/4	42	95	47	-	-
CHV2-25-P**	Rc1					
CHV2-32-P**	Rc1 $^1/_4$	63	140	72	-	-
CHV2-40-P**	Rc1 $^1/_2$					

⚠ Refer to safety precautions and "Pneumatic, Vacuum and Auxiliary Components (No. CB-24SA)" safety precautions as well.

■ Mounting / Installation / adjustment

● Apply recommended tightening torque when connecting pipes.
- · To prevent air leak and to protect threads from damage.
- · First tighten the screw by hand to prevent threads from being damaged, then use a tool.
- · Do not tighten while pressure is applied.

● Connect piping so that connections are not dislocated by system movement, vibration, or tension, etc.
- · Control of actuator speed will be disabled if piping on the exhaust face of the pneumatic circuit is disengaged.
- · When using the chuck holding mechanism, the chuck will be released creating a hazardous state.

● Install an air filter just before the pneumatic component in the circuit.

(Recommended tightening torque)

Port thread	Tightening torque N·m
M5	1.0 to 1.5
Rc1/8	3 to 5
Rc1/4	6 to 8
Rc3/8	13 to 15
Rc1/2	16 to 18
Rc3/4	19 to 40
Rc1	41 to 70
Rc1 $^1/_4$	43 to 75
Rc1 $^1/_2$	45 to 80

■ During use & maintenance

● Stop air flow and confirm that there is no residual pressure before replacing the tube.

● When removing piping from this product, use the tang on the piping to be removed.

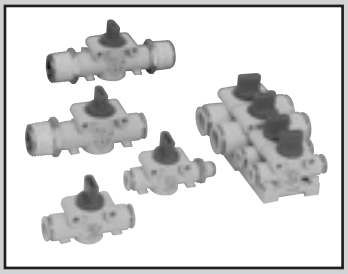

Quick valve

2QV Series

JIS symbol

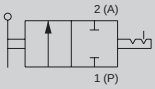

Specifications

Descriptions		2QV
Working fluid		Air
Max. working pressure	MPa	1.0
Min. working pressure	kPa	-100 kPa (*1)
Proof pressure	MPa	1.5
Fluid temperature	°C	0 to 60
Ambient temperature	°C	0 to 60
Switching angle	°	90
Applicable tube		Urethane tube (tube U-95**, NU-**)
Mounting orientation		Free

*1: When using urethane tube (U-95**, NU-**) at vacuum, use an insert ring.
*2: Lubricant is used, so oil-prohibited specification is not available.

Operational explanation

● 2 port valve (2QV Series)

[Closed state]

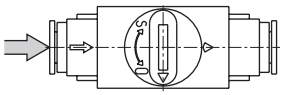

[Open state]

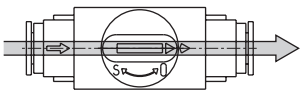

Examples

● Stop valve in air blow circuit

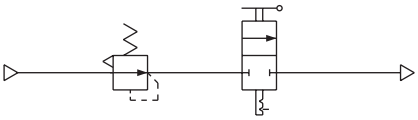

Quick valve (2QV)

How to order

● Quick valve

2 QV - 04-04 - P70

Ⓐ Valve

Ⓑ Port size (P port) - (A port)

Code	Content
Ⓐ Valve	
2	2 way valve

	Ⓑ Port size (P port) - (A port)				Bracket (*1)
		IN side	-	OUT side	
Standard	**04-04**	Push-in fitting ø4	-	Push-in fitting ø4	2QV-P1-P70
	06-06	Push-in fitting ø6	-	Push-in fitting ø6	
	08S-08S	Push-in fitting ø8	-	Push-in fitting ø8	
	08-08	Push-in fitting ø8	-	Push-in fitting ø8	2QV-P2-P70
	10-10	Push-in fitting ø10	-	Push-in fitting ø10	
	12-12	Push-in fitting ø12	-	Push-in fitting ø12	
Option	**6A-04**	R1/8 (*2)	-	Push-in fitting ø4	2QV-P1-P70
	6A-06	R1/8 (*2)	-	Push-in fitting ø6	
	8A-06	R1/4 (*2)	-	Push-in fitting ø6	
	8A-08S	R1/4 (*2)	-	Push-in fitting ø8	
	10A-08	R3/8 (*2)	-	Push-in fitting ø8	2QV-P2-P70
	10A-10	R3/8 (*2)	-	Push-in fitting ø10	
	15A-10	R1/2 (*2)	-	Push-in fitting ø10	
	15A-12	R1/2 (*2)	-	Push-in fitting ø12	
	04-6A	Push-in fitting ø4	-	R1/8 (*2)	2QV-P1-P70
	06-6A	Push-in fitting ø6	-	R1/8 (*2)	
	06-8A	Push-in fitting ø6	-	R1/4 (*2)	
	08S-8A	Push-in fitting ø8	-	R1/4 (*2)	
	08-10A	Push-in fitting ø8	-	R3/8 (*2)	2QV-P2-P70
	10-10A	Push-in fitting ø10	-	R3/8 (*2)	
	10-15A	Push-in fitting ø10	-	R1/2 (*2)	
	12-15A	Push-in fitting ø12	-	R1/2 (*2)	
	6A-6A	R1/8 (*2)	-	R1/8 (*2)	2QV-P1-P70
	8A-8A	R1/4 (*2)	-	R1/4 (*2)	
	10A-10A	R3/8 (*2)	-	R3/8 (*2)	2QV-P2-P70
	15A-15A	R1/2 (*2)	-	R1/2 (*2)	

Ⓒ Clean room specifications		
	Structure	Material restriction
P70	Dust generation preventing	–

(*1) Note that this may differ according to the body size.

(*2) No sealant is applied.

SCPD3
SCM
SSD2
MDC2
SMG
LCM
LCR
LCG
LCX
STM
STG
STR2
MRL2
GRC
Cylinder switch
MN3E MN4E
4GA/B
M4GA/B
MN4GA/B
F.R (module unit)
Clean F.R
Precision R
Press gauge Diff. press gauge
Electro-pneumatic R
Speed controller
Auxiliary valve
Fitting/ tube
Clean air unit
Pressure sensor
Flow rate sensor
Valve for air blow
Ending

Dimensions

● Port size
・P port (push-in fitting)/A port (push-in fitting)

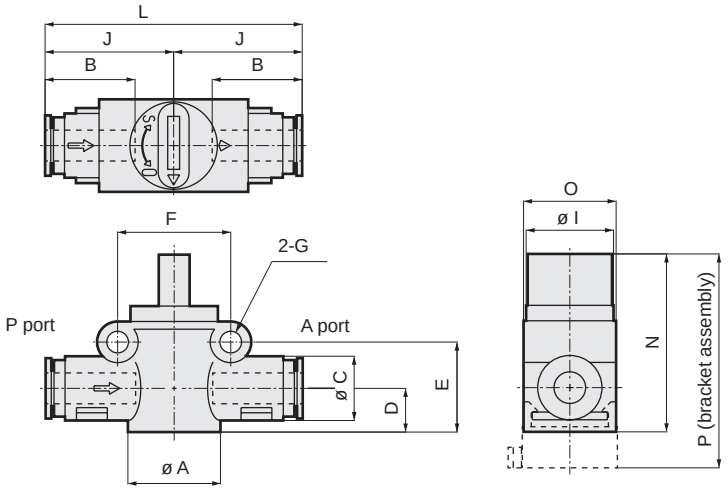

Applicable tube O.D. (mm) P port	Applicable tube O.D. (mm) A port	Model No.	A	B	C	D	E	F	G	I	J	L	N	O	P	Weight (g)	Effective cross-sectional area (mm²) P→A	Effective cross-sectional area (mm²) A→R
ø4	ø4	2QV-04-04-P70	18	16	12.5	8.5	17.5	22	4.2	17	25	50	34.5	18	41.5	20	4.2	1.8
ø6	ø6	2QV-06-06-P70		17.5												21	9.3	
ø8	ø8	2QV-08S-08S-P70		19	14.5						26.5	53				23	10.2	
ø8	ø8	2QV-08-08-P70	22	19	17.5	10.7	22.8	26.5	4.2	17	31.5	63	39.8	22	46.8	34	17.5	4.0
ø10	ø10	2QV-10-10-P70		21.5												35	22.5	
ø12	ø12	2QV-12-12-P70		23	20						33	66				38	22.5	

* Tolerance of effective cross-sectional area is ±10%.

● Port size
・P port (male thread)/A port (push-in fitting)

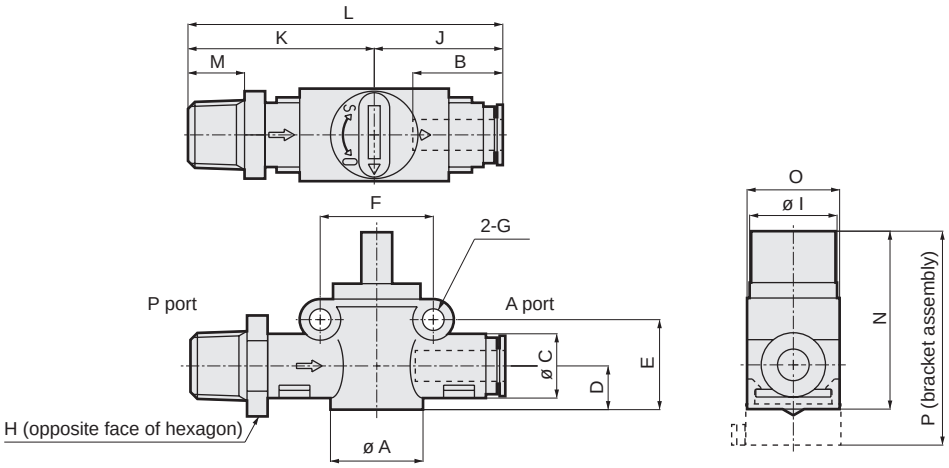

Port thread R P port	Applicable tube O.D. (mm) A port	Model No.	A	B	C	D	E	F	G	H	I	J	K	L	M	N	O	P	Weight (g)	Effective cross-sectional area (mm²) P→A	Effective cross-sectional area (mm²) A→R
1/8	ø4	2QV-6A-04-P70	18	16	12.5	8.5	17.5	22	4.2	14	17	25	33.5	58.5	8	34.5	18	41.5	26	4.2	1.8
1/8	ø6	2QV-6A-06-P70		17.5															32	9.3	
1/4	ø6	2QV-8A-06-P70								17			38	63	11				35	9.3	
1/4	ø8	2QV-8A-08S-P70		19	14.5							26.5		64.5					40	10.2	
3/8	ø8	2QV-10A-08-P70	22	19	17.5	10.7	22.8	26.5	4.2	17	17	31.5	44.5	76	12	39.8	22	46.8	57	16.3	4.0
3/8	ø10	2QV-10A-10-P70		21.5						19									63	21.4	
1/2	ø10	2QV-15A-10-P70								22			47.5	79	15				76	21.4	
1/2	ø12	2QV-15A-12-P70		23	20							33	49	82					85	21.4	

* Tolerance of effective cross-sectional area is ±10%.

Dimensions

● Port size
・P port (push-in fitting)/A port (male thread)

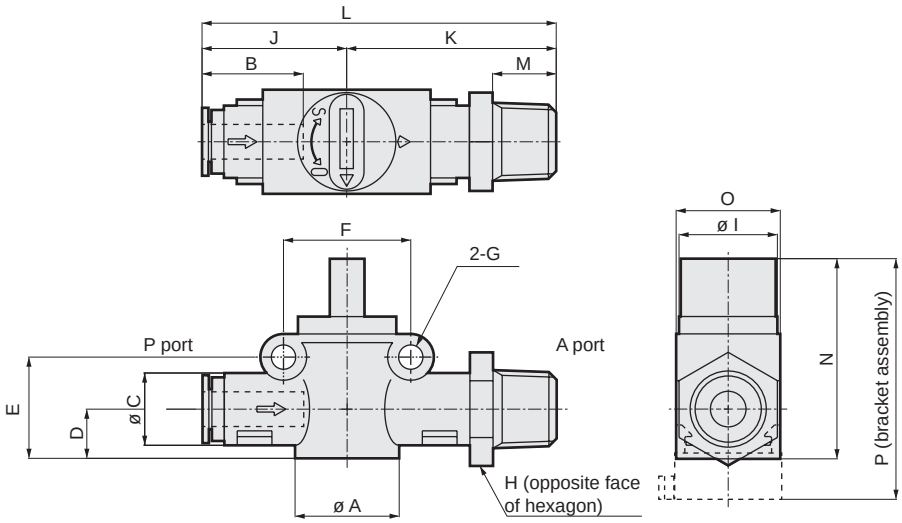

Applicable tube O.D. (mm)	Port thread R	Model No.	A	B	C	D	E	F	G	H	I	J	K	L	M	N	O	P	Weight (g)	Effective cross-sectional area (mm²)	
P port	A port																			P→A	A→R
ø4	1/8	2QV-04-6A-P70	18	16	12.5	8.5	17.5	22	4.2	14	17	25	33.5	58.5	8	34.5	18	41.5	26	3.5	1.8
ø6	1/8	2QV-06-6A-P70		17.5															32	9.3	
ø6	1/4	2QV-06-8A-P70								17			38	63	11				35	9.3	
ø8	1/4	2QV-08S-8A-P70		19	14.5							26.5		64.5					40	10.2	
ø8	3/8	2QV-08-10A-P70	22	19	17.5	10.7	22.8	26.5	4.2	17	17	31.5	44.5	76	12	39.8	22	46.8	57	15.8	4.0
ø10	3/8	2QV-10-10A-P70		21.5						19									63	21.4	
ø10	1/2	2QV-10-15A-P70								22			47.5	79	15				76	21.4	
ø12	1/2	2QV-12-15A-P70		23	20.0							33	49	82					85	21.4	

* Tolerance of effective cross-sectional area is ±10%.

● Port size
・P port (male thread)/A port (male thread)

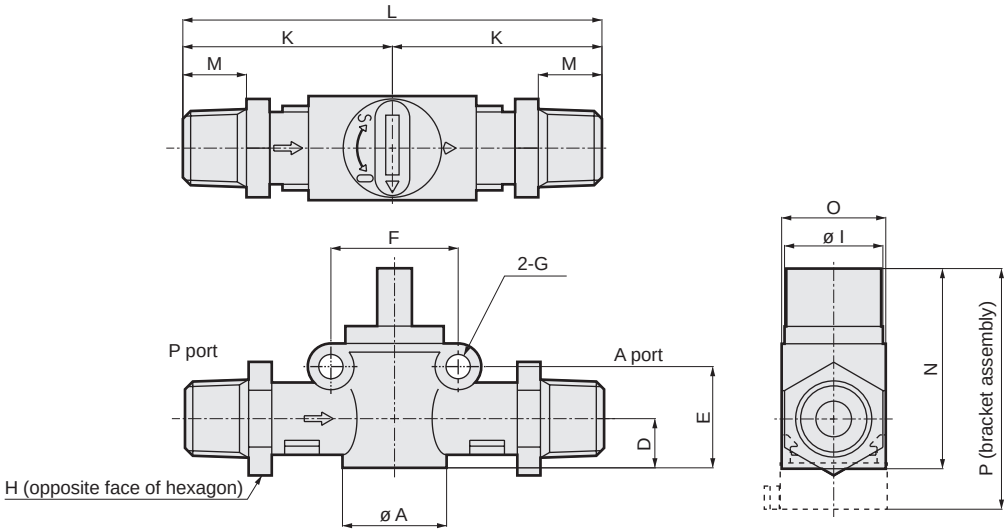

Port thread R		Model No.	A	D	E	F	G	H	I	K	L	M	N	O	P	Weight (g)	Effective cross-sectional area (mm²)	
P port	A port																P→A	A→R
1/8	1/8	2QV-6A-6A-P70	18	8.5	17.5	22	4.2	14	17	33.5	67	8	34.5	18	41.5	42	9.5	1.8
1/4	1/4	2QV-8A-8A-P70						17		38	76	11				48	9.5	
3/8	3/8	2QV-10A-10A-P70	22	10.7	22.8	26.5	4.2	19	17	44.5	89	12	39.8	22	46.8	90	21.4	4.0
1/2	1/2	2QV-15A-15A-P70						22		47.5	95	15				116	21.4	

* Tolerance of effective cross-sectional area is ±10%.

Dimensions

● Dedicated bracket

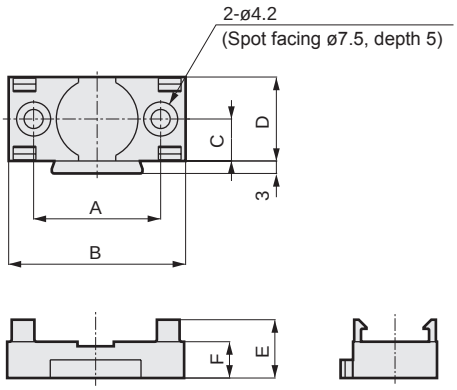

● Installation spacing dimensions for manifolds

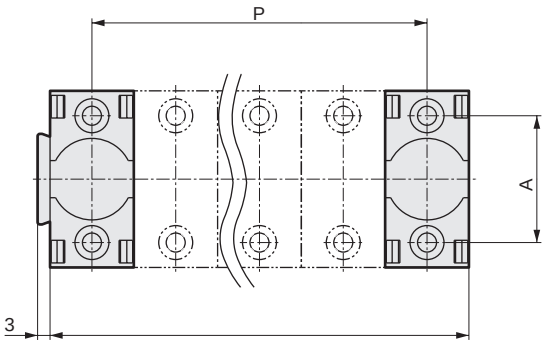

Model No.	A	B	C	D	E	F	P	L	Subject A dimension	Weight (g)
2QV-P1-P70	28	39	9.25	18.5	13	8	D × (n-1)	D × n	18	5.4
2QV-P2-P70	32	44	11.25	22.5	12.5	8			22	7.2

n = station No.

MEMO

Pneumatic components: Warning/caution

Always read this section before use.

Design & selection

WARNING

■ Do not constantly push down or apply a load onto the push-ring of the push-in fitting.
- The tube may lose its ability to hold.
- When transporting an assembled product, avoid positions in which the push ring is constantly pressed down.

Mounting / Installation / adjustment

CAUTION

■ If the manifolds are installed to save space, it may be difficult to operate the value manually.
It is recommended to operate the manifold by inserting a slotted screw driver into the slot on the top.

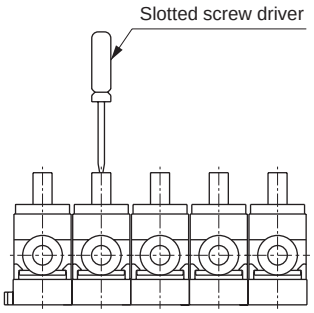

■ If manifolds are installed with a priority on manual operation, valves are operated easily by installing them every other space.

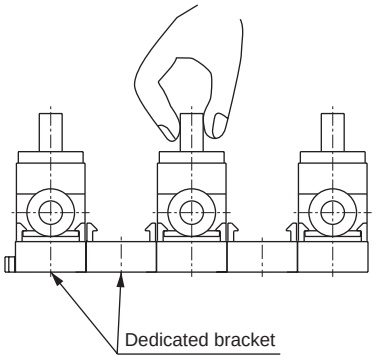

During use & maintenance

⚠ CAUTION

■ Operation angle of this product is 90˚.
Do not turn the product more than 90˚.

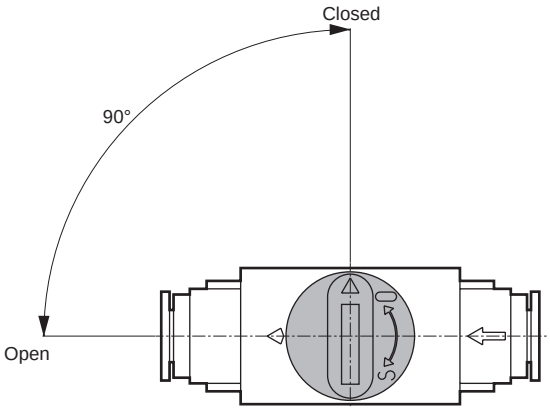

■ The dedicated bracket's hooks can be damaged by external force. Use brackets correctly.

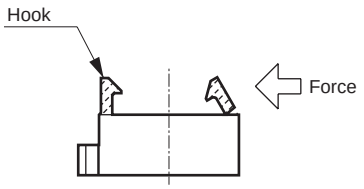

■ How to use bracket

❶ Fix the bracket before starting use. To mount, insert the product at a slant into the bracket, and then fit into hooks.

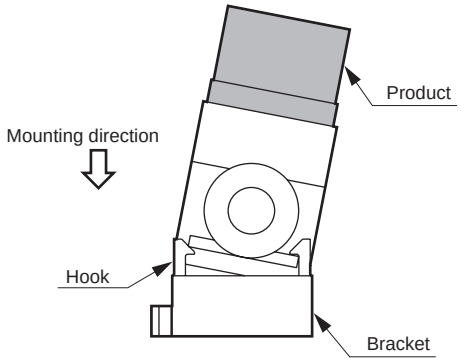

❷ To remove the product, tilt it slightly to the side, and release only one hook.

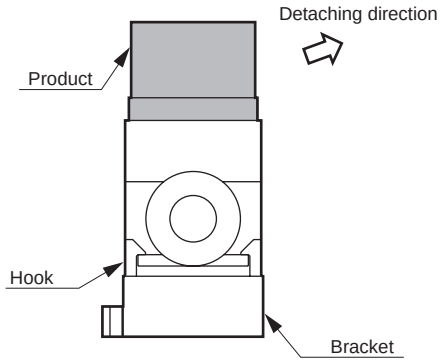

❸ When mounting a manifold, put the project on the bracket into the other bracket's slot.

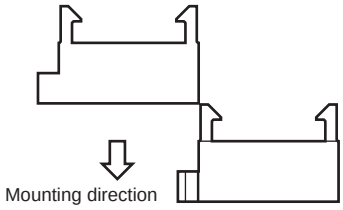

Fitting/tube

Pneumatic auxiliary components

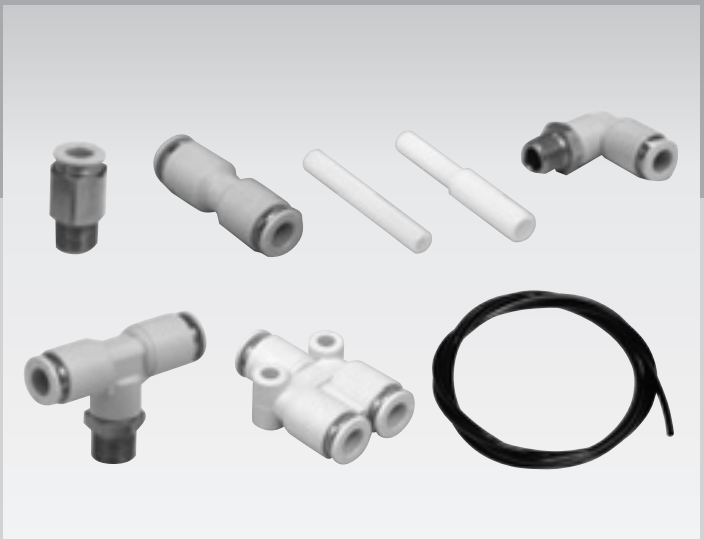

CONTENTS

Series variation 944

Fitting

- **Miniature tightening fitting (F) 946**
- **Fitting (GW) 954**
- **Mini fitting (GWJ) 968**
- **Stainless steel fitting (ZW) 974**

Tube

- **Fiber tube 976**
- **Antistatic tube 988**
- **Urethane tube (NU) 991**

⚠ Safety precautions 992

SCPD3
SCM
SSD2
MDC2
SMG
LCM
LCR
LCG
LCX
STM
STG
STR2
MRL2
GRC
Cylinder switch
MN3E MN4E
4GA/B
M4GA/B
MN4GA/B
F.R (module unit)
Clean F.R
Precision R
Press gauge Diff. press gauge
Electro-pneumatic R
Speed controller
Auxiliary valve
Fitting/ tube
Clean air unit
Pressure sensor
Flow rate sensor
Valve for air blow
Ending

Fitting

Model/appearance	Feature	Applicable tube size	Port size						Page
			M3	M5	1/8	1/4	3/8	1/2	
● Miniature fitting F Series	Miniature Barbed, clamp fitting	ø3.2		●	●				946
		ø4		●	●				
		ø6		●	●				
● Fitting GW Series	Push-in fitting Flame-resistant resin has been adopted as standard material	ø3.2	●	●					954
		ø4		●	●	●			
		ø6		●	●	●	●		
		ø8			●	●	●		
		ø10			●	●	●	●	
		ø12				●	●	●	
● Fitting Mini GWJ Series	Push-in fitting	ø3.2	●	●	●				968
		ø4		●	●				
		ø6		●	●				
● Fitting Stainless steel ZW Series	Flame-resistant resin incorporated for white body and push ring Stainless steel incorporated for all metal parts	ø4		●	●	●			974
		ø6		●	●	●	●		
		ø8			●	●	●		
		ø10				●	●	●	
		ø12					●	●	

Tube

Model	Feature	Tube outer diameter							Page
		ø1.8	ø3.2	ø4	ø6	ø8	ø10	ø12	
Fiber tube	Extremely fine air tube as fine and flexible as lead wire. Outstanding flexibility and high piping freedom enable piping in difficult places or in short distance such as small spaces.	●							976
Antistatic tube	Antistatic and dust-proof tube. High flexibility and bendable, enabling difficult piping in a narrow space etc. easy.		●	●	●	●	●	●	988
Urethane tube	Due to new manufacturing process, larger inner diameter and increased strength are realized while keeping the same O. D. This piping tube is also used for larger flow rate.			●	●	●	●	●	991

F Miniature fitting

Port size M5 to 1/8 (Rc or R)

● For piping size M5, bore size ø3.2/ø4/ø6
New series of miniature fittings is available

RoHS CAD

■ Barbed fitting				■ Clamp fitting
Straight/FTS-P80	Elbow/FTL-P80	Tee/FTT-P80	Barbed nipple/FTS-0-P80	Straight/FCS-P80
· Applicable tube O.D.: ø3.2 to ø6 · Page: 948	· Applicable tube O.D.: ø3.2 to ø6 · Page: 948	· Applicable tube O.D.: ø3.2 to ø6 · Page: 948	· Applicable tube O.D.: ø3.2 to ø6 · Page: 948	· Applicable tube O.D.: ø3.2 to ø6 · Page: 949

	■ Double screw nipple	■ Socket		
Elbow/FCL-P80	Straight/FNS-P80	Straight/FSS-P80	Elbow/FSL-P80	Tee/FST-P80
· Applicable tube O.D.: ø3.2 to ø6 · Page: 949	· Page: 949	· Page: 949	· Page: 949	· Page: 950

■ Adjustable socket				■ Bush
Elbow/FAL-P80	Tee/FAT-P80	Cross/FAX-P80	Deforming union tee/FAY-P80	FBS-P80
· Page: 950	· Page: 950	· Page: 951	· Page: 951	· Page: 951

■ Bulkhead	■ Plug	■ Extension	■ Manifold	■ Gasket
FWS-P80 Sales unit: 5	FPL-P80	FLS-P80	FMB-P80 Sales unit: 1	FGS-P80 Sales unit: 100
· Page: 951	· Page: 952	· Page: 952	· Page: 952	· Page: 952

● If sales unit is not specified, the product is packed 10 pcs./1 bag.

Specifications

Descriptions	F
Working fluid	Compressed air
Max. working pressure MPa	0.7 or less
Ambient temperature/fluid temperature °C	-5 to 60 (no freezing)
Applicable tube	Urethane tube (model No. U-9504, U-9506) Note

Note: Use urethane tube within 0 to 60°C.

How to order

F A B C – D – P80

- F: Miniature fitting
- A: Shape
- B: Flow path shape
- C: Applicable tube O.D.
- D: Port size
- E: Clean room specifications

E Clean room specifications

	Structure/treatment	Material restriction
P80	Oil-prohibited	-

Note 1: Refer to model No. section on dimensions page (pages 948 to 952) for combination of model No.
Note 2: Sales unit is 10 pcs./1 bag.
For the sales unit of each model, refer to the series variation on page 946.
Note 3: P80 Series
- Metal material: Brass + electroless nickeling
- Sealant material: Nitrile rubber (NBR)
- Without grease: Grease is not used as this is oil-prohibited specifications.
- Without sealant on screws: PTFE resin coating is not applied.
  For this reason, it is same product as P84 Series. Specify in P80 Series when placing an order.

Note 4: P70/P74 Series are not set. Specify in P80 Series when placing an order.

⚠ Safety precautions

(1) If urethane tube is used with 40°C and over, use a clamp fitting.
(2) Apply torque on fittings, 0.3 to 0.6 N·m (90° retightening after manual tightening) on M3, and 1 to 1.5 N·m (30° retightening after manual tightening) on M5.
(3) Use a nylon tube with tolerance of diameter within ±0.1, while urethane rubber tube within $^{+0.1}_{-0.15}$.
(4) Type with slit on clamp ring of clamp fitting is for tube O.D. 3.2 mm.
(5) If elbow, tee, cross, deforming tee or barbed fitting is used at frequently moving tube section, trouble may occur. So please avoid use in such place.
(6) Bending radius of tube around the fitting must be the value and over in the right table.

Min. bending radius mm		Barbed fitting	Clamp fitting
ø4	Urethane	20	10
ø6	Urethane	40	20

SCPD3
SCM
SSD2
MDC2
SMG
LCM
LCR
LCG
LCX
STM
STG
STR2
MRL2
GRC
Cylinder switch
MN3E MN4E
4GA/B
M4GA/B
MN4GA/B
F.R (module unit)
Clean F.R
Precision R
Press gauge Diff. press gauge
Electro-pneumatic R
Speed controller
Auxiliary valve
Fitting/ tube
Clean air unit
Pressure sensor
Flow rate sensor
Valve for air blow
Ending

Dimensions: Barbed fitting (straight, elbow, tee, barbed nipple)

CAD

Barbed fitting

[Sales unit is 10 pcs./1 bag]

● Straight/FTS□- □ -P80

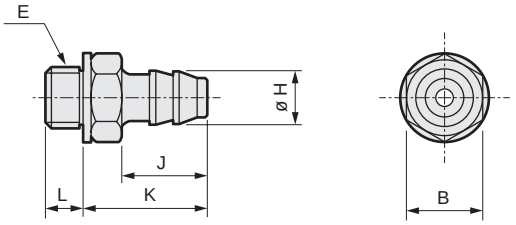

Model No.	Applicable tube O.D. ø	B	E	Min. bore size	H	J	K	L	Effective cross-sectional area (mm²)	Weight g
FTS4-M5	ø3.2, ø4	7	M5 × 0.8	1.8	2.9	5.5	8.6	2.9	2.1	1.5
FTS4-6	ø3.2, ø4	10	R1/8	1.8	2.9	5.5	9.5	8	2.1	5.9
FTS6-M5	ø6	7	M5 × 0.8	2.5	4.7	7	10.1	2.9	4.1	1.8
FTS6-6	ø6	10	R1/8	2.5	4.7	7	11	8	4.1	6.2

Note: "Clean room specifications" code is omitted in model number above.

● Elbow/FTL □ - □ -P80

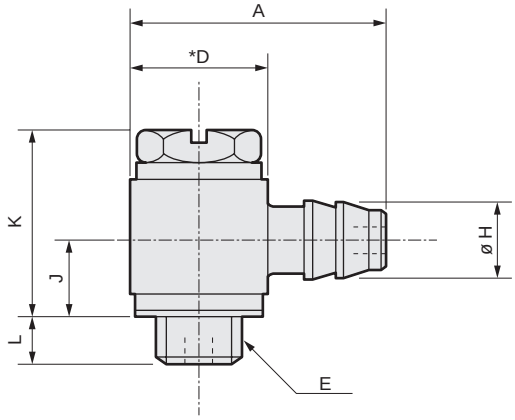

Model No.	Applicable tube O.D. ø	A	D	E	Min. bore size	H	J	K	L	Effective cross-sectional area (mm²)	Weight g
FTL4-M5	ø3.2, ø4	13.5	8	M5 × 0.8	1.8	2.9	5.1	11.6	2.9	1.3	5.3
FTL6-M5	ø6	15	8	M5 × 0.8	1.8	4.7	5.1	11.6	2.9	1.5	5.6

Note: "Clean room specifications" code is omitted in model number above.

● Tee/FTT □ - □ -P80

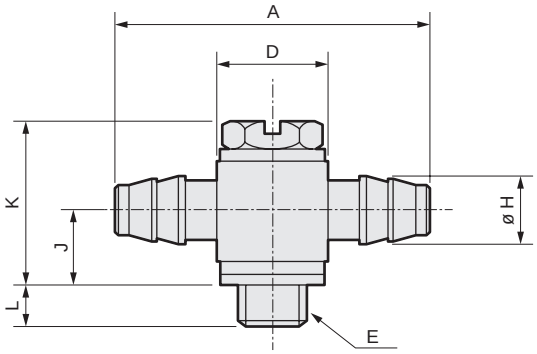

Model No.	Applicable tube O.D. ø	A	D	E	Min. bore size	H	J	K	L	Effective cross-sectional area (mm²)	Weight g
FTT4-M5	ø3.2, ø4	19	8	M5 × 0.8	1.8	2.9	5.1	11.6	2.9	1.3	5.3
FTT6-M5	ø6	22	8	M5 × 0.8	1.8	4.7	5.1	11.6	2.9	1.5	6.0

Note: "Clean room specifications" code is omitted in model number above.

● Barbed nipple/FTS□-0-P80

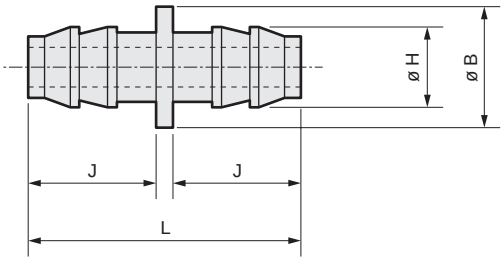

Model No.	Applicable tube O.D. ø	B	Min. bore size	H	J	L	Effective cross-sectional area (mm²)	Weight g
FTS6-0	ø6	7	2.5	4.7	7	15	4.1	1.5

Note: "Clean room specifications" code is omitted in model number above.

Dimensions: Clamp fitting (straight, elbow)/double screw nipple (straight)/socket (straight)

CAD

[Sales unit is 10 pcs./1 bag]

Clamp fitting

● Straight/FCS □ - □ -P80

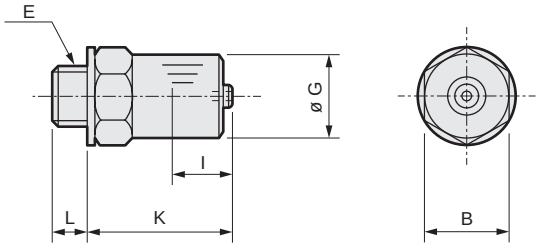

Model No.	Applicable tube O.D. ø	B	E	Min. bore size	G	I	K	L	Effective cross-sectional area (mm^2)	Weight g
FCS4-M5	ø4	7	M5 × 0.8	1.8	7	4.3	11.7	2.9	2.1	3.1
FCS4-6	ø4	10	R1/8	1.8	7	4.3	12.1	8	2.1	7.2
FCS6-M5	ø6	8	M5 × 0.8	2.5	9	5	12.4	2.9	4.1	4.4
FCS6-6	ø6	10	R1/8	2.5	9	5	12.8	8	4.1	8.3

Note: "Clean room specifications" code is omitted in model number above.

● Elbow/FCL □ - □ -P80

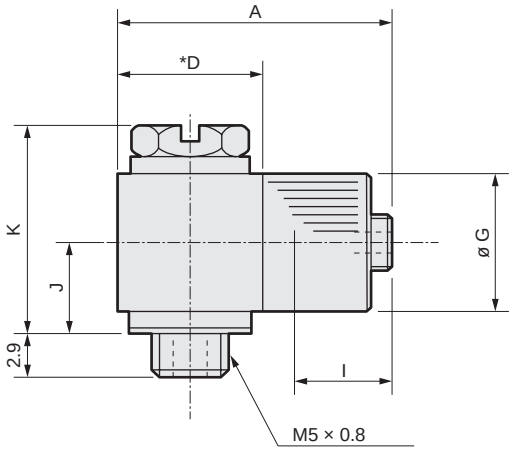

Model No.	Applicable tube O.D. ø	A	D	Min. bore size	G	I	J	K	Effective cross-sectional area (mm^2)	Weight g
FCL4-M5	ø4	16.1	8	1.8	7	4.3	5.1	11.6	1.3	6.7
FCL6-M5	ø6	17.8	9	1.8	9	5	6.1	13.6	1.5	10

Note: "Clean room specifications" code is omitted in model number above.

Double screw nipple

● Straight/FNS □ - □ -P80

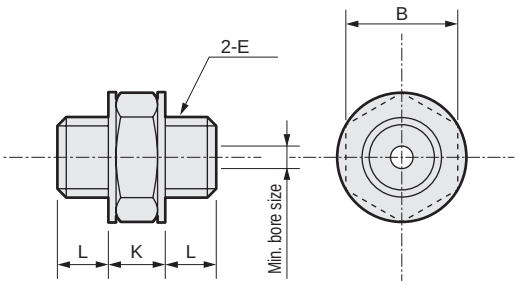

Model No.	B	E	Min. bore size	K	L	Effective cross-sectional area (mm^2)	Weight g
FNS-M5	7	M5 × 0.8	1.8	3.7	2.9	2.1	1.9

Note: "Clean room specifications" code is omitted in model number above.

Socket

● Straight/FSS □ - □ -P80

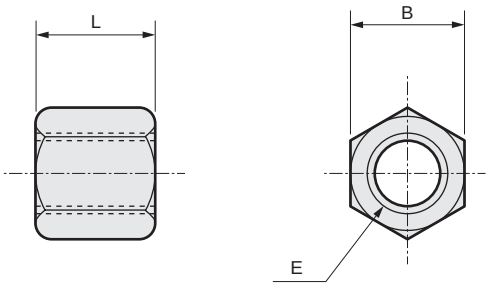

Model No.	B	E	L	Effective cross-sectional area (mm^2)	Weight g
FSS-M5	7	M5 × 0.8	8	9	1.8

Note: "Clean room specifications" code is omitted in model number above.

SCPD3
SCM
SSD2
MDC2
SMG
LCM
LCR
LCG
LCX
STM
STG
STR2
MRL2
GRC
Cylinder switch
MN3E MN4E
4GA/B
M4GA/B
MN4GA/B
F.R (module unit)
Clean F.R
Precision R
Press gauge Diff. press gauge
Electro-pneumatic R
Speed controller
Auxiliary valve
Fitting/ tube
Clean air unit
Pressure sensor
Flow rate sensor
Valve for air blow
Ending

Dimensions: Double screw nipple (elbow)/socket (tee)/adjustable socket (elbow/tee)

[Sales unit is 10 pcs./1 bag]

Double screw nipple

● Elbow/FSL-M5-P80

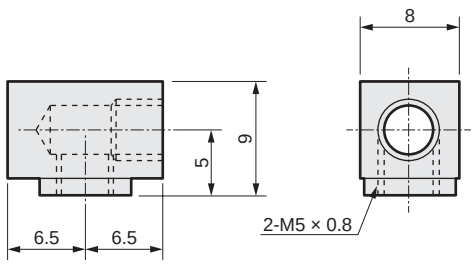

Effective cross-sectional area 8 mm^2
Weight: 5.9 g

Socket

● Tee/FST-M5-P80

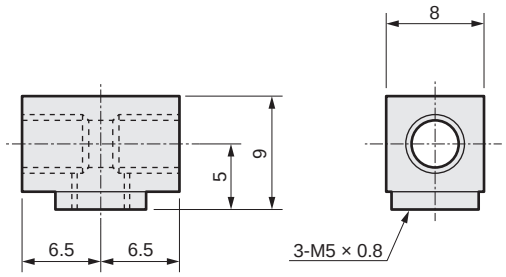

Effective cross-sectional area 8 mm^2
Weight: 5.1 g

Adjustable socket

● Elbow/FAL-*-P80

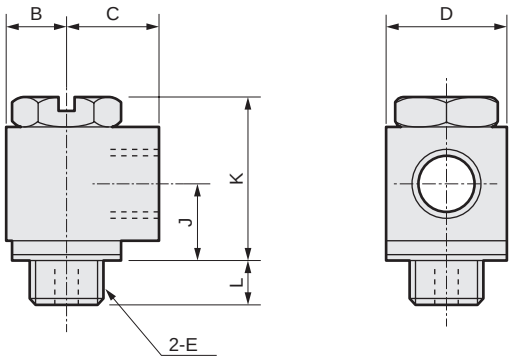

● Tee/FAT-*-P80

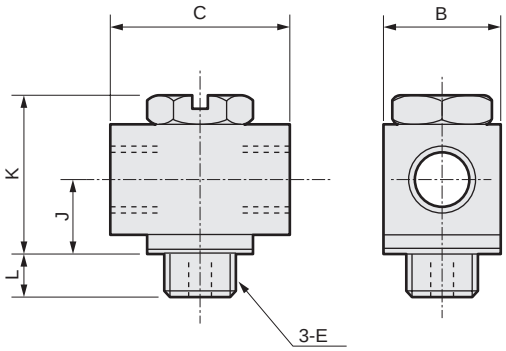

Model No.	B	C	D	E	Min. bore size	J	K	L	Effective cross-sectional area (mm^2)	Weight g
FAL-M5	4	6.5	8	M5 × 0.8	1.8	5.6	11.6	2.9	1.7	6.0

Note: "Clean room specifications" code is omitted in model number above.

Model No.	B	C	E	Min. bore size	J	K	L	Effective cross-sectional area (mm^2)	Weight g
FAT-M5	8	12	M5 × 0.8	1.8	5.6	11.6	2.9	1.7	6.4

Note: "Clean room specifications" code is omitted in model number above.

Dimensions: Adjustable socket (cross, deforming union tee)/bush/bulkhead

CAD

Adjustable socket

● Cross/FAX-M5-P80 • Sales unit is 10 pcs./1 bag

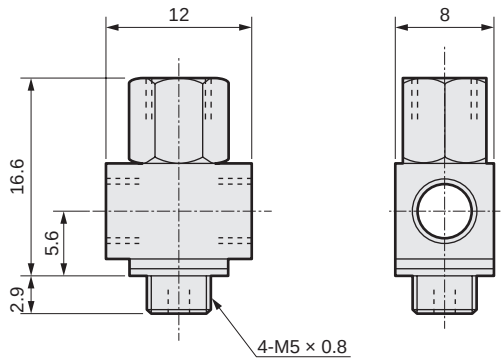

Min. bore size 1.8 mm
Effective cross-sectional area 1.7 mm^2
Weight: 7.4 g

● Deforming union tee/FAY-M5-P80 • Sales unit is 10 pcs./1 bag

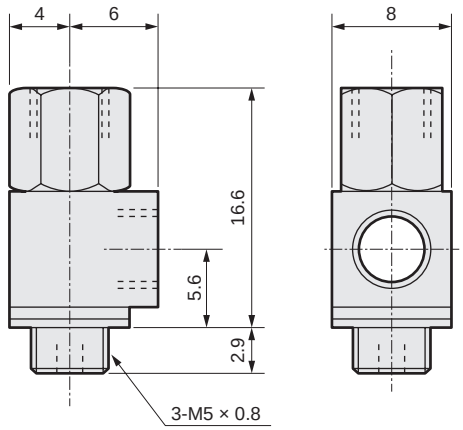

Min. bore size 1.8 mm
Effective cross-sectional area 1.7 mm^2
Weight: 7.0 g

Bush

● FBS-*-P80 • Sales unit is 10 pcs./1 bag

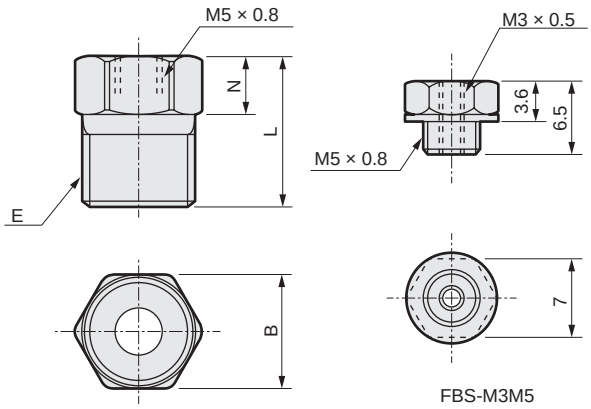

FBS-M56/M58

FBS-M3M5
Weight: 1.3 g
Effective cross-sectional area 4 mm^2

Bulkhead

● FWS-*-P80 • Sales unit is 5 pcs./1 bag

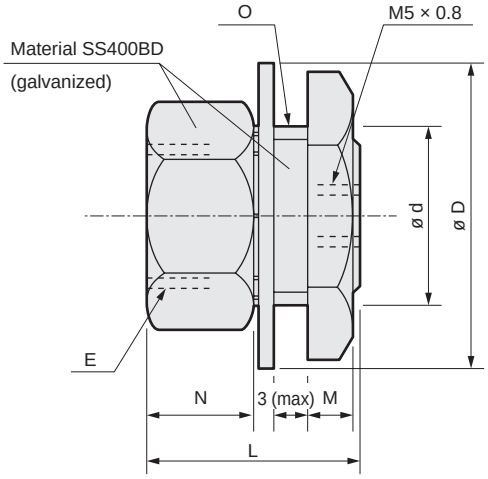

Model No.	B	E	L	N	Effective cross-sectional area (mm^2)	Weight g
FBS-M56	10	R1/8	12	4	9	6.0
FBS-M58	14	R1/4	16	5	9	16

Note: "Clean room specifications" code is omitted in model number above.

Model No.	D	d	E	L	M	N	O	Effective cross-sectional area (mm^2)	Weight g
FWS-M5	14.7	8	M5 × 0.8	11	3	4	M8 × 1	9	5.5
FWS-M56	15.2	12	Rc1/8	14	5	7	M12 × 1	9	15

Note: "Clean room specifications" code is omitted in model number above.

Dimensions: Plug/extension/manifold/gasket

Plug

● FPL-*-P80 • Sales unit is 10 pcs./1 bag

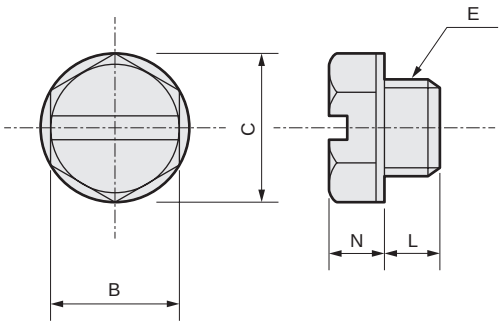

Model No.	B	C	E	N	L	Weight g
FPL-M5	7	7.8	M5 × 0.8	3.1	2.9	1.5

Extension

● FLS-M5-P80 • Sales unit is 10 pcs./1 bag

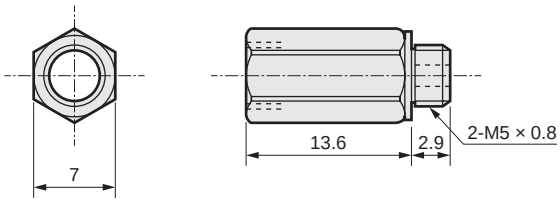

Effective cross-sectional area 2.1 mm^2
Weight: 3.7 g

Manifold

● FMB-M56-P80 • Sales unit is 1 pcs./1 bag

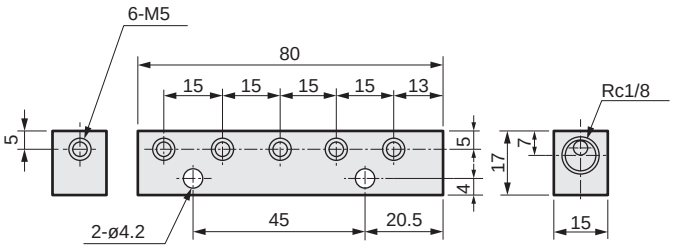

Weight: 50 g

Gasket

● FGS-P80 • Sales unit is 100 pcs./1 bag

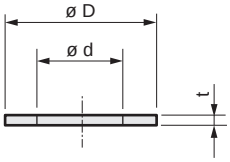

Model No.	D	d	t	Weight g
FGS-M5	7.8	4.8	0.6	0.1

GW Fitting

Port size M3 to 1/2 (Rc or R)

● Wide variety of connection fittings and models

CAD

■ Straight

Single straight/ GWS □ - □ -P7*/P80

Applicable tube O.D. ø
4
6
8
10
12
16

· Page: 958

Single straight/ GWS □ - □ -S-P7*/P80

Applicable tube O.D. ø
3.2
4
6
8
10
12

· Page: 958

Female straight/ GWS □ - □ -M-P7*/P80

Applicable tube O.D. ø
4
6
8
10
12

· Page: 958

Bulkhead female/ GWS □ - □ -E-P7*/P80

Applicable tube O.D. ø
4
6
8
10
12

· Page: 958

Bulk head/ GWS □ - □ -X-P7*/P80

Applicable tube O.D. ø
4
6
8
10
12

· Page: 959

Bulkhead female connector/ GWM □ - □ -X-P7*/P80

Applicable tube O.D. ø
4
6
8
10
12

· Page: 959

Straight/ GWS □ -0-P7*/P80

Applicable tube O.D. ø
4
6
8
10
12
16

· Page: 959

Different diameter straight/ GWS □ -0-P7*/P80

Applicable tube O.D. ø
4/6
6/8
8/10
10/12

· Page: 959

Plug reducer/ GWS □ - □ P-P7*/P80

Applicable tube O.D. ø
4
6
8
10

· Page: 960

Plug/ GWP □ -0-P7*/P80

Fitting port size ø
4
6
8
10
12

· Page: 960

Plug reducer/GWP □-0-P7*/P80

Fitting port size ø
4/6
6/8
8/10
10/12

· Page: 960

■ Elbow

Single elbow/ GWL □ - □ -P7*/P80

Applicable tube O.D. ø
4
6
8
10
12
16

· Page: 960

Long elbow/ GWL □ - □ -L-P7*/P80

Applicable tube O.D. ø
4
6
8
10
12

· Page: 961

Single 45°elbow/ GWL □ - □ -45-P7*/P80

Applicable tube O.D. ø
4
6
8
10
12

· Page: 961

Turn elbow/ GWL □ - □ -T-P7*/P80

Applicable tube O.D. ø
4
6
8
10
12

· Page: 961

■ Tee

Elbow/ GWL □ -0-P7*/P80

Applicable tube O.D. ø
4
6
8
10
12
16

· Page: 961

Both tee/ GWT □ - □ -P7*/P80

Applicable tube O.D. ø
4
6
8
10
12

· Page: 962

D tee/ GWT □ - □ -D-P7*/P80

Applicable tube O.D. ø
4
6
8
10
12

· Page: 962

Tee/ GWT-0-P7*/P80

Applicable tube O.D. ø
4
6
8
10
12

· Page: 962

Y tee/ GWY □ - □ -0-P7*/P80

Applicable tube O.D. ø
4/4
6/6
8/8
10/10
12/12
6/4
8/6
10/8
12/10

· Page: 962

● Sales unit is 10 pcs./1 bag

Product introduction : Page 956
Specifications/model No. : Page 957

Both ports Y tee union/ GWY □ - □ -P7*/P80

Applicable tube O.D. ø
4
6
8
10
12

· Page: 963

Cross shaped/ GWCR □ -0-P7*/P80

Applicable tube O.D. ø
8
10
12

· Page: 963

2-port turn elbow/ GWL □ - □ -2T-P7*/P80

Applicable tube O.D. ø
4
6
8
10
12

· Page: 963

Tetrapod (with R)/ GWTR □ - □ -P7*/P80

Applicable tube O.D. ø
4
6
8
10
12

· Page: 963

FY (with R)/ GWFY □ - □ -P7*/P80

Applicable tube O.D. ø
4
6
8
10
12

· Page: 964

Double Y (with R)/ GWWY □ - □ -P7*/P80

Applicable tube O.D. ø
4
6

· Page: 964

Tetrapod shaped/ GWTR □ -0-P7*/P80

Applicable tube O.D. ø
4
6
8
10
12

· Page: 964

FY/ GWFY □ -0-P7*/P80

Applicable tube O.D. ø
4
6
8
10
12

· Page: 964

Double Y/ GWWY □ -0-P7*/P80

Applicable tube O.D. ø
6/4
8/6

· Page: 965

Blanking plug/ GWP □ -B-P7*/P80

Fitting port size ø
4
6
8
10
12
16

· Page: 965

L plug/ GWP □ -L-P7*/P80

Applicable tube O.D. ø
4
6
8
10
12

· Page: 965

C plug/ GWP □ -C-P7*/P80

Applicable tube O.D. ø
4
6
8
10
12

· Page: 965

Y plug/ GWP □ -Y-P7*/P80

Applicable tube O.D. ø
4
6
8
10
12

· Page: 966

Cap/ GWC □ -P7*/P80

Applicable tube O.D. ø
4
6
8
10
12

· Page: 966

Manifold (single/with R)/ GWMF □ - □ -P7*/P80

Applicable tube O.D. ø
4/6
4/8
6/8
6/10
8/10

· Page: 966

Manifold (single)/ GWMF □ -0-P7*/P80

Applicable tube O.D. ø
4/6
4/8
6/8
6/10
8/10

· Page: 966

Manifold (double/with R)/ GWMF □ - □ -W-P7*/P80

Applicable tube O.D. ø
4/8
6/10
8/12

· Page: 967

Manifold (double)/ GWMF □ -0-W-P7*/P80

Applicable tube O.D. ø
4/8
6/10
8/12

· Page: 967

Insert ring custom order INS-U □ -1-P7*/P80

Applicable tube O.D. ø
4
6
8
10
12

· Page: 967

● Sales unit is 10 pcs./1 bag

GW Fitting

Port size M3 to 1/2 (Rc or R)

Work environment and device-friendly flame-resistant white body

Fittings for greatly reducing piping space

1. Push-in fitting for pneumatic piping.
2. Compact size for space saving.
3. V shaped packing seal to realize smooth insertion and accurate seal.
   Smooth insertion and secure sealing.
4. Freely rotating elbow union to make piping and removal work easier.
5. White body blends into working environment. Electroless nickel plating used for brass sections.
6. Flame resistant resin (equivalent to UL94 Standards V-0) used for GW Series body and push ring.

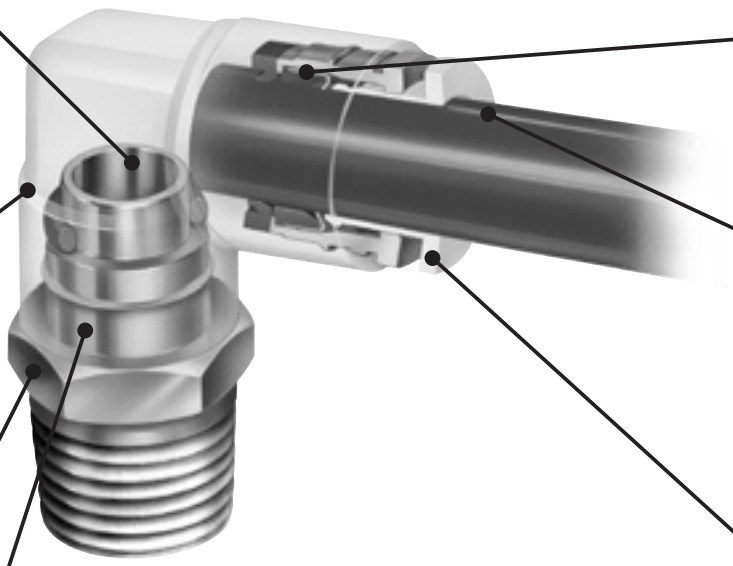

Full flow up to the bore size
- There are no sections narrower than the bore size.
- A flow equivalent to the bore size can be run.

White Flame resistant resin (GW Series) is adopted
- White body blends into the work environment.
- Flame resistant PBT (equivalent to UL94 standards V-0) is provided as standard.

Electroless nickeling used for copper alloy sections
- Electroless nickel plating is used as standard for all copper alloy parts to improve corrosion resistance and appearance.

Easy piping work
- The section of the pipe connected with the body rotates freely, so the piping removal direction can be set freely.

Accurate tube holding
- The chuck bracket acts in the direction in which the tube is dislocated, ensuring highly reliable holding.

Push-in installation
- The tube can be connected to the piping fitting by pushing the tube in.
- V shaped packing is used for the seal between the tube and fitting. The tube can be inserted with light force while obtaining a sure seal.

Easy tube removal
- The push ring evenly pushes and opens the chuck, so the tube is completely released from the chuck and can be removed smoothly.

Fitting

GW Series

- Port size M3 to R1/2, ø4 to ø12
- Applicable tube ø3.2 to ø12

RoHS

Specifications

Descriptions		GW
Working fluid		Compressed air
Max. working pressure	MPa	1.0
Negative pressure	kPa	-100 *2
Ambient temperature	°C	-10 to 60 (no freezing)
Applicable tube		Urethane tube (U-95**, NU-**) *1

*1: Refer to page 947 for tube dimensions, ambient temperature and working pressure.
*2: Use an insert ring when using urethane tube (U-92**, U-95**, NU-**) under vacuum pressure.

How to order

* Refer to model No. sections on dimensions page (pages 958 to 967) for combination of model No.

GW L 6 - 8 - 45 - P70

A B C D E

A Shape

S	Straight
L	Elbow
T	Tee
TR	Tetrapod shaped
Y	Y tee
FY	FY
WY	Double Y
CR	Cross shaped
P	Plug
C	Cap
M	Bulkhead female connector
MF	Manifold

B Applicable tube O.D.

3	ø3.2
4	ø4
6	ø6
8	ø8
10	ø10
12	ø12
16	ø16
44	ø4/ø4
46	ø4/ø6
48	ø4/ø8
64	ø6/ø4
66	ø6/ø6
68	ø6/ø8
610	ø6/ø10
86	ø8/ø6
88	ø8/ø8
810	ø8/ø10
812	ø8/ø12
108	ø10/ø8
1010	ø10/ø10
1012	ø10/ø12
1210	ø12/ø10
1212	ø12/ø12

C Port size

M3	M3 × 0.5
M5	M5 × 0.8
6	R1/8*
8	R1/4*
10	R3/8*
15	R1/2*
0	No thread
4P	Plug for ø4
6P	Plug for ø6
8P	Plug for ø8
10P	Plug for ø10
12P	Plug for ø12
B	Blanking plug
C	C plug
L	L plug
Y	Y plug

* Sealant is not applied.

D Other combination

L	Long
T	Turn
D	D type
X	Bulk head
S	Round
M	Female
E	Bulkhead female
W	Double
2T	2-port turn
45	Single 45°

Note: Sales unit is 10 pcs. /1 bag.

E Clean room specifications

	Structure/treatment	Material restriction
P70	Dust generation preventing	-
P74	Dust generation preventing	Copper-based/silicon-based/ halogen-based materials (fluorine, chlorine, bromine) are prohibited
P80	Oil-prohibited	-

Note 1: P80 Series
- Metal material: Brass + electroless nickeling
- Sealant material: Nitrile rubber (NBR)
- Without grease: Grease is not used as this is oil-prohibited specifications.
- Without sealant on screws: PTFE resin coating is not applied.

For this reason, it is same product as P84 Series.
Specify in P80 Series when placing an order.

Note 2: Push ring colors are:
- P70…Pink
- P74…Orange
- P80…Light blue

SCPD3
SCM
SSD2
MDC2
SMG
LCM
LCR
LCG
LCX
STM
STG
STR2
MRL2
GRC
Cylinder switch
MN3E MN4E
4GA/B
M4GA/B
MN4GA/B
F.R (module unit)
Clean F.R
Precision R
Press gauge Diff. press gauge
Electro-pneumatic R
Speed controller
Auxiliary valve
Fitting/ tube
Clean air unit
Pressure sensor
Flow rate sensor
Valve for air blow
Ending

Dimensions: Single straight/single straight (round)/female straight/bulkhead female

CAD

(Sales unit is 10 pcs./1 bag)

Single straight

● GWS □ - □ -P7*/P80

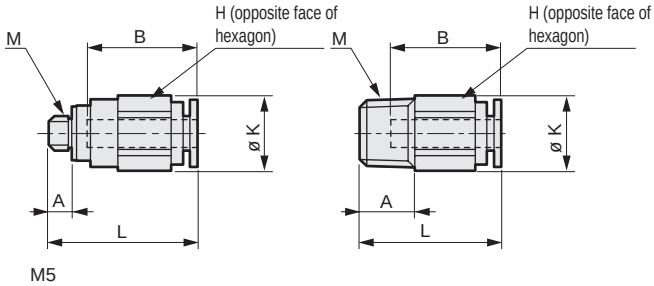

Model No.	Applicable tube O.D. ø	M	H	K	L	A	B	Min. bore size	Effective cross-sectional area mm²	Weight g
GWS 4-M5	4	M5 × 0.8	10	11	21.5	3.4	16	2.5	4	6
GWS 4- 6		R1/8	10	11	20.5	8	16	2.5	4	8
GWS 4- 8		R1/4	14	15.8	19.5	11	16	2.5	4	15
GWS 6-M5	6	M5 × 0.8	12	13.5	23	3.4	17.5	2.5	4.4	9
GWS 6- 6		R1/8	12	13.5	23	8	17.5	4	10.3	11
GWS 6- 8		R1/4	14	15.8	23.5	11	17.5	4	10.3	18
GWS 6-10		R3/8	17	19.1	21.5	12	17.5	4	10.3	26
GWS 8- 6	8	R1/8	14	15.8	28	8	19	5	17.5	18
GWS 8- 8		R1/4	14	15.8	27	11	19	6	22.4	17
GWS 8-10		R3/8	17	19.1	22.5	12	19	6	22.4	24
GWS10- 6	10	R1/8	17	19.1	31	8	21.5	5	17.5	26
GWS10- 8		R1/4	17	19.1	32.5	11	21.5	8	30.5	22
GWS10-10		R3/8	17	19.1	28.5	12	21.5	8	30.5	26
GWS10-15		R1/2	22	24	26.5	15	21.5	8	30.5	49
GWS12- 8	12	R1/4	19	21.4	35.5	11	23	8	35.5	37
GWS12-10		R3/8	19	21.4	30.5	12	23	10	40	32
GWS12-15		R1/2	22	24	29.5	15	23	10	40	51

Note: "Clean room specifications" code is omitted in model number above.

Single straight (round)

● GWS □ - □ -S-P7*/P80

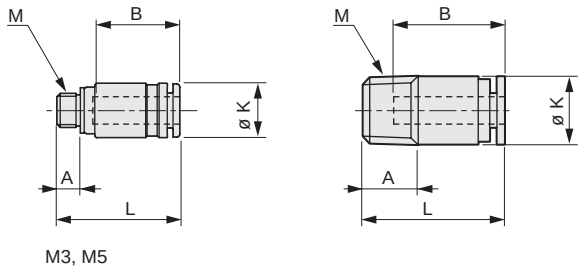

Model No.	Applicable tube O.D. ø	M	K	L	A	B	Hexagon head socket diameter	Effective cross-sectional area mm²	Weight g
GWS 3-M3-S	3.2	M3 × 0.5	6.9	15.7	2.4	11.7	1.5	1.4	1.5
GWS 3-M5-S		M5 × 0.8	6.9	16.7	3.4	11.7	2	2.7	2.5
GWS 4-M3-S	4	M3 × 0.5	7.9	16.9	2.4	12.9	1.5	1.6	2.5
GWS 4-M5-S		M5 × 0.8	7.9	17.9	3.4	12.9	2	2.7	3
GWS 4- 6-S		R1/8	9.8	20.5	8	16	2.5	4.1	8
GWS 6-M5-S	6	M5 × 0.8	9.9	19.2	3.4	14.2	2.5	4.4	4
GWS 6- 6-S		R1/8	11.8	23	8	17.5	4	10.6	9
GWS 6- 8-S		R1/4	13.8	23	11	17.5	4	10.6	15
GWS 8- 6-S	8	R1/8	14	28	8	19	5	20.4	15
GWS 8- 8-S		R1/4	14	27	11	19	6	22	15
GWS 8-10-S		R3/8	17	22.5	12	19	6	22	21
GWS10- 6-S	10	R1/8	17.5	30.5	8	21.5	5	20.1	26
GWS10- 8-S		R1/4	17.5	28.5	11	21.5	6	26.3	21
GWS10-10-S		R3/8	17.5	28.5	12	21.5	8	30.1	27
GWS10-15-S		R1/2	22	26.5	15	21.5	8	30.1	46
GWS12- 8-S	12	R1/4	19.5	34	11	23	6	26.3	33
GWS12-10-S		R3/8	19.5	29.5	12	23	8	37.9	28
GWS12-15-S		R1/2	22	28.5	15	23	8	37.9	47

Note: "Clean room specifications" code is omitted in model number above.

Female straight

● GWS □ - □ -M-P7*/P80

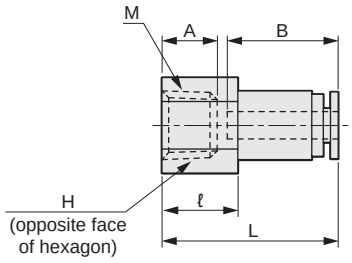

Model No.	Applicable tube O.D. ø	M	H	L	ℓ	A	B	Min. bore size	Effective cross-sectional area mm²	Weight g
GWS 4- 6-M	4	Rc1/8	12	25.5	11	8	16	2.5	4	9
GWS 4- 8-M		Rc1/4	17	28.5	14	11	16	2.5	4	23
GWS 6- 6-M	6	Rc1/8	14	27	11	8	17.5	4	10.3	16
GWS 6- 8-M		Rc1/4	17	30	14	11	17.5	4	10.3	24
GWS 6-10-M		Rc3/8	19	31	15	12	17.5	4	10.3	25
GWS 8- 6-M	8	Rc1/8	17	28.5	11	8	19	6	22.4	26
GWS 8- 8-M		Rc1/4	17	31.5	14	11	19	6	22.4	27
GWS 8-10-M		Rc3/8	19	32.5	15	12	19	6	22.4	29
GWS10- 8-M	10	Rc1/4	19	34.5	14	11	21.5	8	30.5	42
GWS10-10-M		Rc3/8	19	35.5	15	12	21.5	8	30.5	35
GWS12- 8-M	12	Rc1/4	22	36	14	11	23	10	35.5	57
GWS12-10-M		Rc3/8	22	37	15	12	23	10	35.5	53
GWS12-15-M		Rc1/2	24	40	18	15	23	10	35.5	56

Note: "Clean room specifications" code is omitted in model number above.

Bulkhead female

● GWS □ - □ -E-P7*/P80

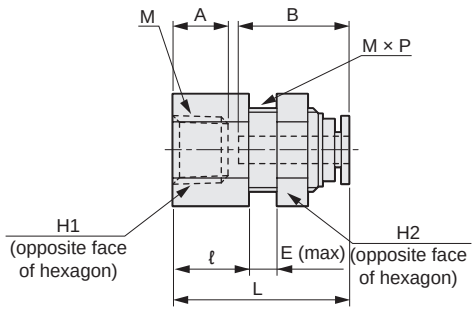

Model No.	Applicable tube O.D. ø	M	H_1	H_2	L	ℓ	A	B	E	M × P	Mounting hole diameter	Min. bore size	Effective cross-sectional area mm²	Weight g
GWS 4- 6-E	4	Rc1/8	14	14	25.5	11	8	16	5	M12 × 1	13	2.5	4	21
GWS 4- 8-E		Rc1/4	17	14	28.5	14	11	16	5	M12 × 1	13	2.5	4	28
GWS 6- 6-E	6	Rc1/8	17	17	27	11	8	17.5	5	M14 × 1	15	4	10.3	33
GWS 6- 8-E		Rc1/4	17	17	30	14	11	17.5	5	M14 × 1	15	4	10.3	33
GWS 6-10-E		Rc3/8	19	17	31.5	15	12	17.5	5	M14 × 1	15	4	10.3	35
GWS 8- 6-E	8	Rc1/8	19	19	28.5	11	8	19	6	M16 × 1	17	6	22.4	42
GWS 8- 8-E		Rc1/4	19	19	31.5	14	11	19	6	M16 × 1	17	6	22.4	56
GWS 8-10-E		Rc3/8	19	19	32.5	15	12	19	6	M16 × 1	17	6	22.4	38
GWS10- 8-E	10	Rc1/4	22	23	34.5	14	11	21.5	9	M20 × 1	21	8	30.5	73
GWS10-10-E		Rc3/8	22	23	35.5	15	12	21.5	9	M20 × 1	21	8	30.5	68
GWS12-10-E	12	Rc3/8	24	26	37.5	15	12	23	10	M22 × 1	23	9	35.5	88
GWS12-15-E		Rc1/2	24	26	40.5	18	15	23	10	M22 × 1	23	9	35.5	82

Note: "Clean room specifications" code is omitted in model number above.

Dimensions: Bulk head/bulk head female connector/straight/different diameter straight CAD

(Sales unit is 10 pcs./1 bag)

Bulk head
● GWS □ - □ -X-P7*/P80

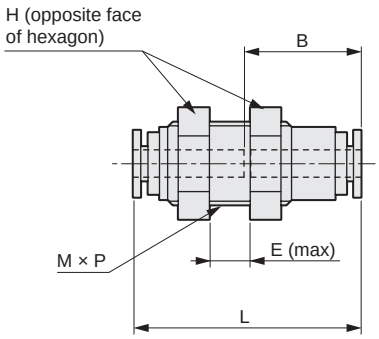

Model No.	Applicable tube O.D. ø	H	L	B	E	M × P	Mounting hole diameter	Min. bore size	Effective cross-sectional area mm²	Weight g
GWS 4-0-X	4	14	33	16	7.5	M12 × 1	13	2.5	4	20
GWS 6-0-X	6	17	36	17.5	9.5	M14 × 1	15	4	10	33
GWS 8-0-X	8	19	39	19	12.5	M16 × 1	17	6	22	42
GWS10-0-X	10	23	44.5	21.5	18	M20 × 1	21	8	30	75
GWS12-0-X	12	26	47	23	20.5	M22 × 1	23	9	35	92

Note: "Clean room specifications" code is omitted in model number above.

Bulkhead female connector
● GWM □ - □ -X-P7*/P80

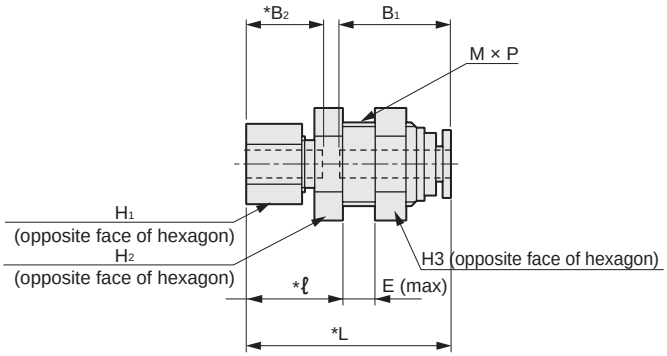

Note: An insert ring (MJU) is required for urethane tube on tightening the fitting side.
Dimensions with * show a rough dimension before tightening a nut.

Model No.	Applicable tube O.D. ø	H_1	H_2	H_3	L	ℓ	B_1	B_2	E	M × P	Mounting hole diameter	Min. bore size	Effective cross-sectional area mm²	Weight g
GWM 4-0-X	4	10	14	14	29.5	15	16	11	5	M12 × 1	13	2.5	4	21
GWM 6-0-X	6	12	17	17	33	16	17.5	11.5	5	M14 × 1	15	4	10	31
GWM 8-0-X	8	14	19	19	35	17.5	19	13	6	M16 × 1	17	6	22	41
GWM10-0-X	10	17	22	23	40	19.5	21.5	14.5	9	M20 × 1	21	8	30	68
GWM12-0-X	12	19	24	26	43.5	21	23	16	10	M22 × 1	23	9	35	85

Note: "Clean room specifications" code is omitted in model number above.

Straight
● GWS □ -0-P7*/P80

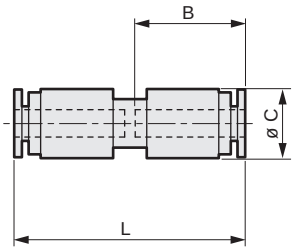

Model No.	Applicable tube O.D. ø	L	B	C	Min. bore size	Effective cross-sectional area mm²	Weight g
GWS 4-0	4	33.5	16	10	2.5	4	4
GWS 6-0	6	36.5	17.5	12.5	4	10	6
GWS 8-0	8	39.5	19	14.5	6	22	8
GWS10-0	10	45	21.5	17.5	8	30	13
GWS12-0	12	47.5	23	20	10	35	17
GWS16-0	16	58	28	26.5	13.2	90	38

Note: "Clean room specifications" code is omitted in model number above.

Different diameter straight
● GWS □ -0-P7*/P80

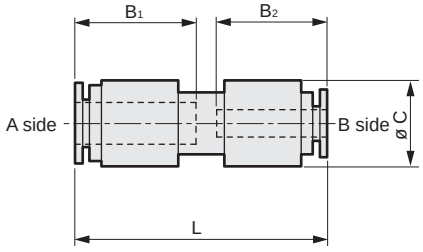

Model No.	Applicable tube O.D. ø		L	B_1	B_2	C	Min. bore size	Effective cross-sectional area mm²	Weight g
	A side	B side							
GWS 46-0	6	4	36.5	17.5	16	12.5	2.5	4	6
GWS 68-0	8	6	39.5	19	17.5	14.5	4	10	8
GWS 810-0	10	8	45	21.5	19	17.5	6	22	12
GWS1012-0	12	10	47.5	23	21.5	20	8	30	17

Note: "Clean room specifications" code is omitted in model number above.

Dimensions: Plug reducer/plug/plug reducer/single elbow

CAD

(Sales unit is 10 pcs./1 bag)

Plug reducer

● GWS □ - □ P-P7*/P80

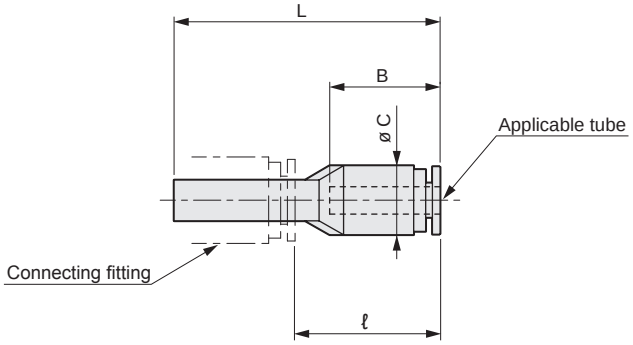

Model No.	Applicable tube O.D. ø	Fitting port size ø	L	ℓ*	B	C	Min. bore size	Effective cross-sectional area mm²	Weight g
GWS 4- 6P	4	6	38.5	21	16	10	2.3	3.5	3
GWS 6- 4P	6	4	42	26	17.5	12.5	2.3	3.5	4
GWS 6- 8P		8	41	22	17.5	12.5	4	10	4
GWS 6-10P		10	42	20	17.5	12.5	4	10	5
GWS 8-10P	8	10	44.5	22.5	19	14.5	6	22	6
GWS 8-12P		12	44	21	19	14.5	6	22	7
GWS10-12P	10	12	48	25	21.5	17.5	8	30	9

* Dimensions with CKD connecting fittings (GW Series) are shown.
Note: "Clean room specifications" code is omitted in model number above.

Plug

● GWP □ -0-P7*/P80

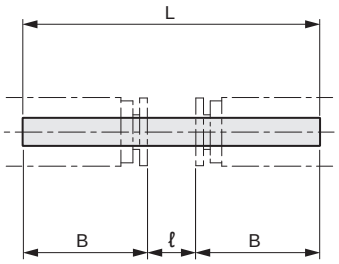

Material: polyamide resin

Model No.	Fitting port size ø	L	B*	ℓ*	Min. bore size	Effective cross-sectional area mm²	Weight g
GWP 4-0	4	43	16	11	2.5	4	0.5
GWP 6-0	6	43	17.5	8	4	10.3	1
GWP 8-0	8	47	19	9	6	22.4	1.5
GWP10-0	10	56	21.5	13	7.5	30	2.5
GWP12-0	12	61	23	15	9.2	35.5	3.5

* Dimensions with CKD connecting fittings (GW Series) are shown.
Note: "Clean room specifications" code is omitted in model number above.

Plug reducer

● GWP □ -0-P7*/P80

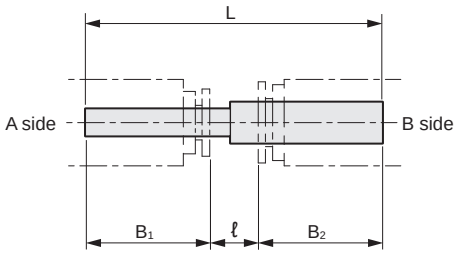

Material: polyamide resin

Model No.	Fitting port size ø		L	ℓ*	B1*	B2*	Min. bore size	Effective cross-sectional area mm²	Weight g
	A side	B side							
GWP 46-0	4	6	43	9.5	16	17.5	2.3	4	0.8
GWP 68-0	6	8	45	8.5	17.5	19	4	10.3	1
GWP 810-0	8	10	50.5	10	19	21.5	6	22.4	2
GWP1012-0	10	12	58	13.5	21.5	23	7.5	30	3

* Dimensions with CKD connecting fittings (GW Series) are shown.
Note: "Clean room specifications" code is omitted in model number above.

Single elbow

● GWL □ - □ -P7*/P80

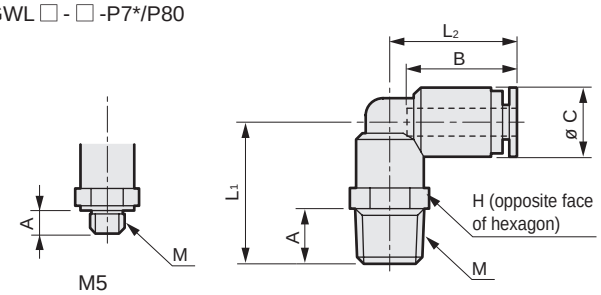

Model No.	Applicable tube O.D. ø	M	H	L1	L2	A	B	C	Min. bore size	Effective cross-sectional area mm²	Weight g
GWL 4-M5	4	M5 × 0.8	8	15	18	3.4	16	10	2.5	3.2	5
GWL 4- 6		R1/8	10	20.5	18.5	8	16	10	2.5	3.2	8
GWL 4- 8		R1/4	14	24	18.5	11	16	10	2.5	3.2	15
GWL 6-M5	6	M5 × 0.8	10	15	20	3.4	17.5	12.5	2.5	4.2	7
GWL 6- 6		R1/8	12	24	21	8	17.5	12.5	4	8	13
GWL 6- 8		R1/4	14	27.5	21	11	17.5	12.5	4	8	18
GWL 6-10		R3/8	17	29	21	12	17.5	12.5	4	8	26
GWL 8- 6	8	R1/8	14	25.5	23.5	8	19	14.5	6	18	17
GWL 8- 8		R1/4	14	28.5	23.5	11	19	14.5	6	18	20
GWL 8-10		R3/8	17	30	23.5	12	19	14.5	6	18	28
GWL10- 6	10	R1/8	17	28	27	8	21.5	17.5	6.5	24.3	26
GWL10- 8		R1/4	17	31	27	11	21.5	17.5	8	27	28
GWL10-10		R3/8	17	32.5	27	12	21.5	17.5	8	27	33
GWL10-15		R1/2	22	35.5	27	15	21.5	17.5	8	27	49
GWL12- 8	12	R1/4	19	33	29.5	11	23	20	8.5	33	37
GWL12-10		R3/8	19	34.5	29.5	12	23	20	9	35	43
GWL12-15		R1/2	22	37.5	29.5	15	23	20	9	35.5	56

Note: "Clean room specifications" code is omitted in model number above.

Dimensions: Long elbow/single 45° elbow/turn elbow/elbow

(Sales unit is 10 pcs./1 bag)

Long elbow

● GWL □ - □ -L-P7*/P80

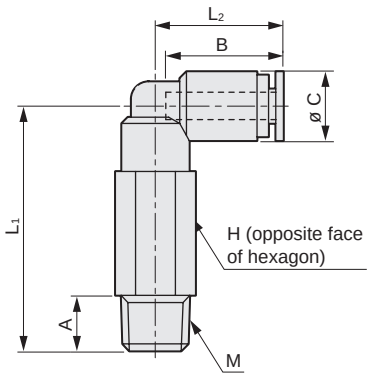

Model No.	Applicable tube O.D. ø	M	H	L_1	L_2	A	B	C	Min. bore size	Effective cross-sectional area mm²	Weight g
GWL 4- 6-L	4	R1/8	10	35.5	18.5	8	16	10	2.5	3.2	15
GWL 4- 8-L		R1/4	14	39	18.5	11	16	10	2.5	3.2	24
GWL 6- 6-L	6	R1/8	12	40	21	8	17.5	12.5	4	8	26
GWL 6- 8-L		R1/4	14	43.5	21	11	17.5	12.5	4	8	34
GWL 8- 6-L	8	R1/8	14	44.5	23.5	8	19	14.5	6	18	39
GWL 8- 8-L		R1/4	14	47.5	23.5	11	19	14.5	6	18	39
GWL 8-10-L		R3/8	17	49	23.5	12	19	14.5	6	18	56
GWL10- 8-L	10	R1/4	17	56	27	11	21.5	17.5	8	27	69
GWL10-10-L		R3/8	17	57.5	27	12	21.5	17.5	8	27	70
GWL10-15-L		R1/2	22	60.5	27	15	21.5	17.5	8	27	109
GWL12- 8-L	12	R1/4	19	60	29.5	11	23	20	8.5	33	94
GWL12-10-L		R3/8	19	61.5	29.5	12	23	20	9	34.5	95
GWL12-15-L		R1/2	22	64.5	29.5	15	23	20	9	34.5	122

Note: "Clean room specifications" code is omitted in model number above.

Single 45° elbow

● GWL □ - □ -45-P7*/P80

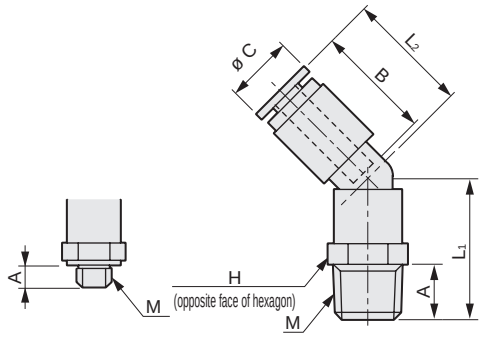

Model No.	Applicable tube O.D. ø	M	H	L_1	L_2	A	B	C	Min. bore size	Effective cross-sectional area mm²	Weight g
GWL 4-M5-45	4	M5 × 0.8	8	14.5	18	3.4	16	10	2.5	3.6	5
GWL 4- 6-45		R1/8	10	20.5	18	8	16	10	2.5	3.6	8
GWL 4- 8-45		R1/4	14	24	18	11	16	10	2.5	3.6	15
GWL 6-M5-45	6	M5 × 0.8	10	15	18.5	3.4	17.5	12.5	2.5	4.3	6
GWL 6- 6-45		R1/8	12	23.5	20	8	17.5	12.5	4	9.2	12
GWL 6- 8-45		R1/4	14	27	20	11	17.5	12.5	4	9.2	17
GWL 6-10-45		R3/8	17	28.5	20	12	17.5	12.5	4	9.2	26
GWL 8- 6-45	8	R1/8	14	25	22	8	19	14.5	6	20	16
GWL 8- 8-45		R1/4	14	28	22	11	19	14.5	6	20	19
GWL 8-10-45		R3/8	17	29.5	22	12	19	14.5	6	20	28
GWL10- 6-45	10	R1/8	17	26	25	8	21.5	17.5	6.5	25.5	25
GWL10- 8-45		R1/4	17	29	25	11	21.5	17.5	8	29	26
GWL10-10-45		R3/8	17	30.5	25	12	21.5	17.5	8	29	31
GWL10-15-45		R1/2	22	33.5	25	15	21.5	17.5	8	29	47
GWL12- 8-45	12	R1/4	19	30.5	27	11	23	20	8.5	35.5	35
GWL12-10-45		R3/8	19	32	27	12	23	20	9	39	41
GWL12-15-45		R1/2	22	35	27	15	23	20	9	39	55

Note: "Clean room specifications" code is omitted in model number above.

Turn elbow

● GWL □ - □ -T-P7*/P80

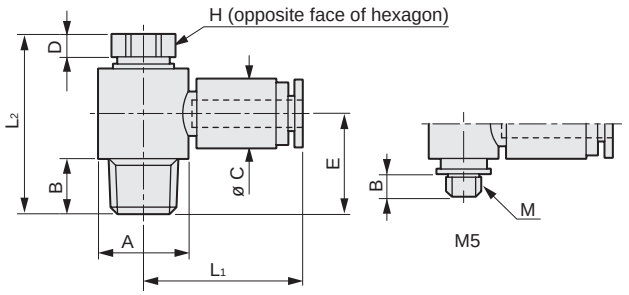

Model No.	Applicable tube O.D. ø	M	H	L_1	L_2	A	B	C	D	E	Effective cross-sectional area mm²	Weight g
GWL 4-M5-T	4	M5 × 0.8	8	21.5	18.5	10	3.4	10	3	10.5	2.8	6
GWL 4- 6-T		R1/8	8	23	26	13	8	10	3	15	3.7	13
GWL 4- 8-T		R1/4	10	24	30	15	11	10	3.5	18	3.7	24
GWL 6-M5-T	6	M5 × 0.8	8	22.5	18.5	10	3.4	12.5	3	10.5	3.4	8
GWL 6- 6-T		R1/8	8	24	26	13	8	12.5	3	15	7.5	14
GWL 6- 8-T		R1/4	10	25	30	15	11	12.5	3.5	18	8	25
GWL 6-10-T		R3/8	14	27.5	36.5	20	12	12.5	4	21.5	9	45
GWL 8- 6-T	8	R1/8	10	26.5	29	15	8	14.5	4	16	16.5	20
GWL 8- 8-T		R1/4	12	28	32	17.6	11	14.5	4	19	17	31
GWL 8-10-T		R3/8	14	29	36.5	20	12	14.5	4	21.5	19	46
GWL10- 8-T	10	R1/4	14	31.5	35.5	20	11	17.5	4	20.5	24	42
GWL10-10-T		R3/8	14	31.5	36.5	20	12	17.5	4	21.5	24	49
GWL10-15-T		R1/2	17	34	42.5	25	15	17.5	4	25.7	27	82
GWL12- 8-T	12	R1/4	17	35.5	38.5	25	11	20	4	21.7	32	66
GWL12-10-T		R3/8	17	35.5	39.5	25	12	20	4	22.7	32	68
GWL12-15-T		R1/2	17	35.5	42.5	25	15	20	4	25.7	32	84

Note: "Clean room specifications" code is omitted in model number above.

Elbow

● GWL □ -0-P7*/P80

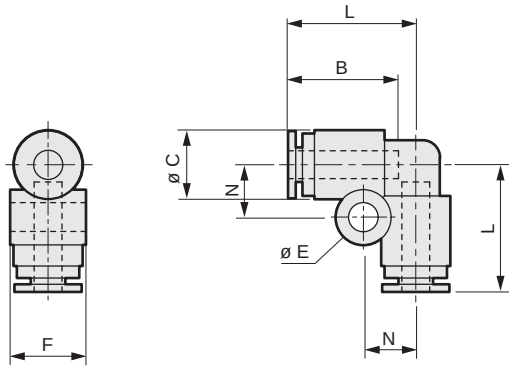

Model No.	Applicable tube O.D. ø	L	B	C	N	E	F	Min. bore size	Effective cross-sectional area mm²	Weight g
GWL 4-0	4	18.5	16	10	7.5	4.2	11	2.5	3	5
GWL 6-0	6	21	17.5	12.5	8.5	4.2	13.5	4	7.5	7
GWL 8-0	8	23.5	19	14.5	9.5	4.2	15.5	6	17	9
GWL10-0	10	27	21.5	17.5	11	4.2	18.5	8	25.5	15
GWL12-0	12	29.5	23	20	12	4.2	21	10	34	18

Note: "Clean room specifications" code is omitted in model number above.

SCPD3
SCM
SSD2
MDC2
SMG
LCM
LCR
LCG
LCX
STM
STG
STR2
MRL2
GRC
Cylinder switch
MN3E MN4E
4GA/B
M4GA/B
MN4GA/B
F.R (module unit)
Clean F.R
Precision R
Press gauge Diff. press gauge
Electro-pneumatic R
Speed controller
Auxiliary valve
Fitting/ tube
Clean air unit
Pressure sensor
Flow rate sensor
Valve for air blow
Ending

Dimensions: Both ports tee/D tee/tee/Y tee

CAD

(Sales unit is 10 pcs./1 bag)

Both ports tee

● GWT □ - □ -P7*/P80

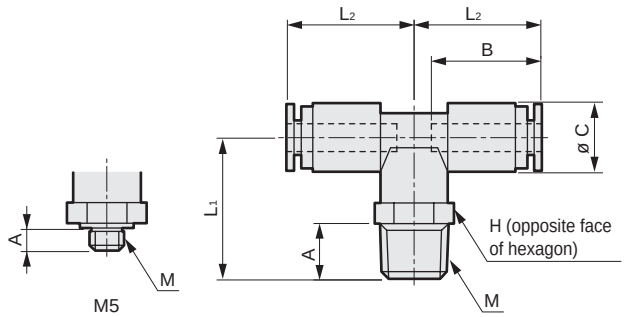

Model No.	Applicable tube O.D. ø	M	H	L_1	L_2	A	B	C	Min. bore size	Effective cross-sectional area mm²	Weight g
GWT 4-M5	4	M5 × 0.8	10	16.5	18.5	3.4	16	10	2.5	4.3	8
GWT 4- 6		R1/8	10	20.5	18.5	8	16	10	2.5	4.3	10
GWT 4- 8		R1/4	14	24	18.5	11	16	10	2.5	4.3	17
GWT 6-M5	6	M5 × 0.8	12	20	21	3.4	17.5	12.5	2.5	4.3	13
GWT 6- 6		R1/8	12	24	21	8	17.5	12.5	4	10.5	16
GWT 6- 8		R1/4	14	27.5	21	11	17.5	12.5	4	10.5	21
GWT 6-10		R3/8	17	29	21	12	17.5	12.5	4	10.5	29
GWT 8- 6	8	R1/8	14	25.5	23.5	8	19	14.5	6	23.5	20
GWT 8- 8		R1/4	14	28.5	23.5	11	19	14.5	6	23.5	24
GWT 8-10		R3/8	17	30	23.5	12	19	14.5	6	23.5	32
GWT10- 8	10	R1/4	17	31	27	11	21.5	17.5	8	33.5	34
GWT10-10		R3/8	17	32.5	27	12	21.5	17.5	8	33.5	39
GWT10-15		R1/2	22	35.5	27	15	21.5	17.5	8	33.5	55
GWT12- 8	12	R1/4	19	33	29.5	11	23	20	8.5	37	45
GWT12-10		R3/8	19	34.5	29.5	12	23	20	9	41	51
GWT12-15		R1/2	22	37.5	29.5	15	23	20	9	41	64

Note: "Clean room specifications" code is omitted in model number above.

D tee

● GWT □ - □ -D-P7*/P80

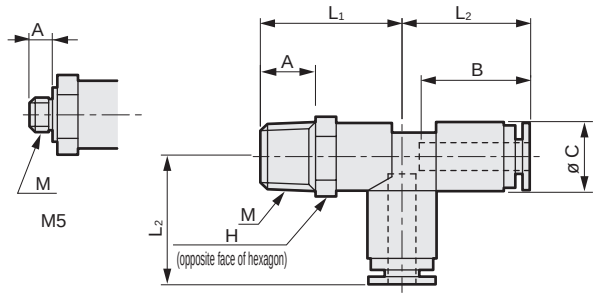

Model No.	Applicable tube O.D. ø	M	H	L_1	L_2	A	B	C	Min. bore size	Effective cross-sectional area mm²	Weight g
GWT 4-M5-D	4	M5 × 0.8	10	16.5	18.5	3.4	16	10	2.5	4.3	8
GWT 4- 6-D		R1/8	10	20.5	18.5	8	16	10	2.5	4.3	10
GWT 4- 8-D		R1/4	14	24	18.5	11	16	10	2.5	4.3	17
GWT 6-M5-D	6	M5 × 0.8	12	19.5	21	3.4	17.5	12.5	2.5	4.3	13
GWT 6- 6-D		R1/8	12	24	21	8	17.5	12.5	4	10.5	16
GWT 6- 8-D		R1/4	14	27.5	21	11	17.5	12.5	4	10.5	21
GWT 6-10-D		R3/8	17	29	21	12	17.5	12.5	4	10.5	29
GWT 8- 6-D	8	R1/8	14	25.5	23.5	8	19	14.5	6	23.5	20
GWT 8- 8-D		R1/4	14	28.5	23.5	11	19	14.5	6	23.5	24
GWT 8-10-D		R3/8	17	30	23.5	12	19	14.5	6	23.5	32
GWT10- 8-D	10	R1/4	17	31	27	11	21.5	17.5	8	33.5	34
GWT10-10-D		R3/8	17	32.5	27	12	21.5	17.5	8	33.5	39
GWT10-15-D		R1/2	22	35.5	27	15	21.5	17.5	8	33.5	55
GWT12- 8-D	12	R1/4	19	33	29.5	11	23	20	8.5	37	45
GWT12-10-D		R3/8	19	34.5	29.5	12	23	20	9	41	51
GWT12-15-D		R1/2	22	37.5	29.5	15	23	20	9	41	64

Note: "Clean room specifications" code is omitted in model number above.

Tee

● GWT □ -0-P7*/P80

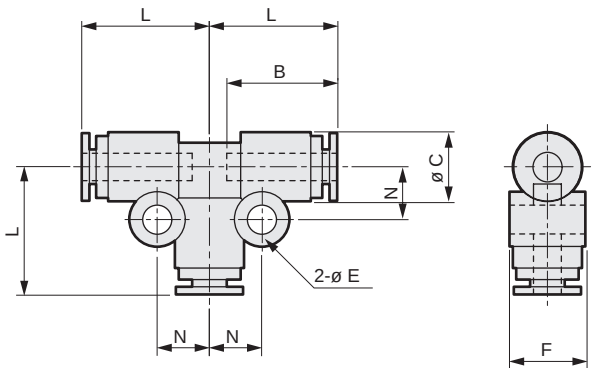

Model No.	Applicable tube O.D. ø	L	B	C	E	F	N	Min. bore size	Effective cross-sectional area mm²	Weight g
GWT 4-0	4	18.5	16	10	4.2	11	7.5	2.5	3.6	8
GWT 6-0	6	21	17.5	12.5	4.2	13.5	8.5	4	9.7	11
GWT 8-0	8	23.5	19	14.5	4.2	15.5	9.5	6	22	14
GWT10-0	10	27	21.5	17.5	4.2	18.5	11	8	30	23
GWT12-0	12	29.5	23	20	4.2	21	12	10	35.5	30

Note: "Clean room specifications" code is omitted in model number above.

Y tee

● GWY □ -0-P7*/P80

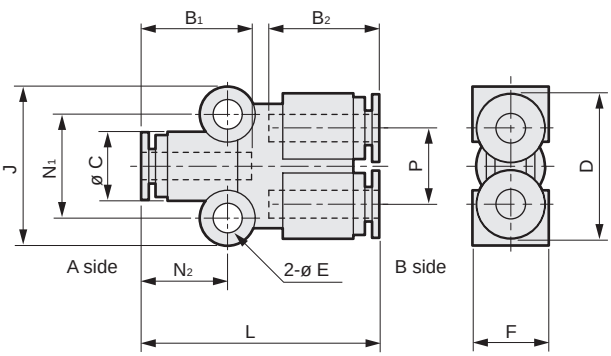

Model No.	Applicable tube O.D. ø A side	Applicable tube O.D. ø B side	L	B_1	B_2	C	D	E	F	J	N_1	N_2	P	Effective cross-sectional area mm²	Weight g
GWY 44-0	4	4	34.5	16	16	10	21	4.2	11	23	15	12.5	11	3.6	8
GWY 66-0	6	6	37.5	17.5	17.5	12.5	26	4.2	13.5	25.5	17.5	14	13.5	10.5	11
GWY 88-0	8	8	40.5	19	19	14.5	30	4.2	15.5	27	19	15	15.5	23	14
GWY1010-0	10	10	48	21.5	21.5	17.5	36	4.2	18.5	30	22	18	18.5	38	23
GWY1212-0	12	12	53	23	23	20	41	4.2	21	32	24	19.5	21	50	30
GWY 64-0	6	4	37.5	17.5	16	12.5	26	4.2	13.5	25.5	17.5	14	13.5	5.4	11
GWY 86-0	8	6	40.5	19	17.5	14.5	30	4.2	15.5	27	19	15	15.5	14.3	16
GWY 108-0	10	8	48	21.5	19	17.5	36	4.2	18.5	30	22	18	18.5	21.1	20
GWY1210-0	12	10	53	23	21.5	20	41	4.2	21	32	24	19.5	21	35.5	30

Note: "Clean room specifications" code is omitted in model number above.

Dimensions: Both ports Y tee union/cross shaped/2-port turn elbow/tetrapod (with R)

(Sales unit is 10 pcs./1 bag)

Both ports Y tee union

● GWY □ - □ -P7*/P80

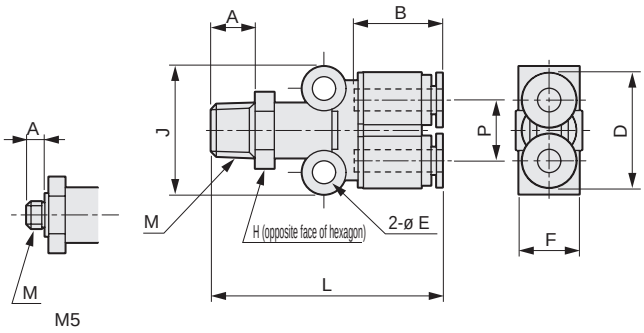

Model No.	Applicable tube O.D. ø	M	H	L	A	B	D	E	F	J	P	Effective cross-sectional area mm²	Weight g
GWY 4-M5	4	M5 × 0.8	12	38	3.4	16	21	4.2	11	23	11	4.5	12
GWY 4- 6		R1/8	12	42	8	16	21	4.2	11	23	11	5.5	14
GWY 4- 8		R1/4	14	45.5	11	16	21	4.2	11	23	11	5.5	19
GWY 6-M5	6	M5 × 0.8	14	41	3.4	17.5	26	4.2	13.5	25.5	13.5	4.5	17
GWY 6- 6		R1/8	14	46	8	17.5	26	4.2	13.5	25.5	13.5	17.5	19
GWY 6- 8		R1/4	14	49	11	17.5	26	4.2	13.5	25.5	13.5	17.5	22
GWY 6-10		R3/8	17	50.5	12	17.5	26	4.2	13.5	25.5	13.5	17.5	31
GWY 8- 6	8	R1/8	17	49	8	19	30	4.2	15.5	27	15.5	25.5	27
GWY 8- 8		R1/4	17	52	11	19	30	4.2	15.5	27	15.5	25.5	29
GWY 8-10		R3/8	17	53.5	12	19	30	4.2	15.5	27	15.5	25.5	34
GWY10- 8	10	R1/4	19	59.5	11	21.5	36	4.2	18.5	30	18.5	35	42
GWY10-10		R3/8	19	61	12	21.5	36	4.2	18.5	30	18.5	38.5	48
GWY10-15		R1/2	22	64	15	21.5	36	4.2	18.5	30	18.5	38	61
GWY12- 8	12	R1/4	22	64.5	11	23	41	4.2	21	32	21	37	51
GWY12-10		R3/8	22	66	12	23	41	4.2	21	32	21	37	57
GWY12-15		R1/2	22	69	15	23	41	4.2	21	32	21	40.5	67

Note: "Clean room specifications" code is omitted in model number above.

Cross shaped

● GWCR □ -0-P7*/P80

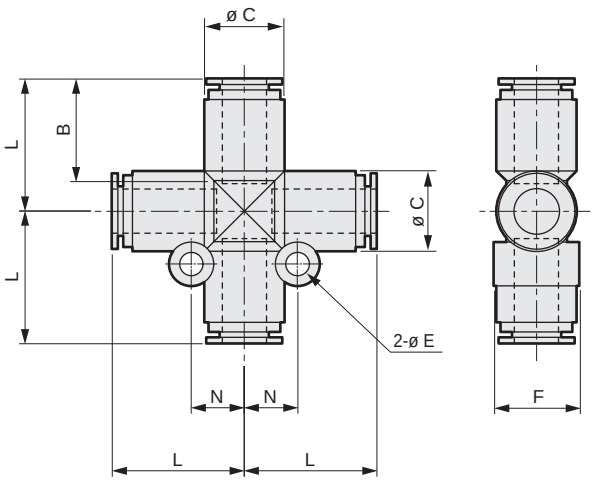

Model No.	Applicable tube O.D. ø	L	B	C	E	F	N	Min. bore size	Effective cross-sectional area mm²	Weight g
GWCR 8-0	8	24	19	14.5	4.2	15.5	9.5	6	22	19
GWCR10-0	10	27.5	21.5	17.5	4.2	18.5	11	8	30.5	30
GWCR12-0	12	30	23	20	4.2	21	12	10	35.9	39

Note: "Clean room specifications" code is omitted in model number above.

2-port turn elbow

● GWL □ - □ -2T-P7*/P80

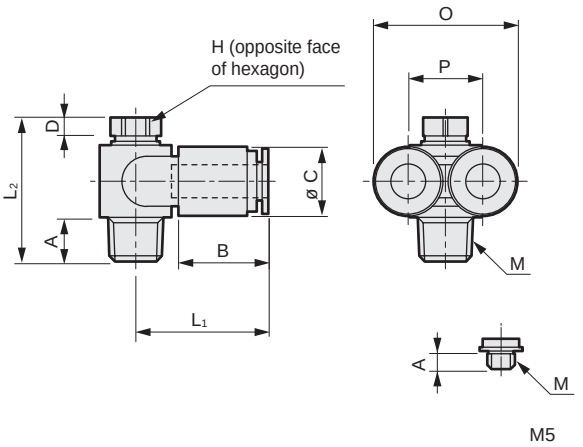

Model No.	Applicable tube O.D. ø	M	H	L_1	L_2	A	B	C	D	O	P	Effective cross-sectional area mm²	Weight g
GWL 4-M5-2T	4	M5 × 0.8	8	21.5	18.5	3.4	16	10	3	21	11	3.6	9
GWL 6- 6-2T	6	R1/8	8	24	26	8	17.5	12.5	3	26	13.5	8.5	18
GWL 8- 8-2T	8	R1/4	12	28	32	11	19	14.5	4	30	15.5	19	36
GWL10-10-2T	10	R3/8	14	31.5	36.5	12	21.5	17.5	4	36	18.5	26	54
GWL12-15-2T	12	R1/2	17	35.5	42.5	15	23	20	4	41	21	34	90

Note: "Clean room specifications" code is omitted in model number above.

Tetrapod (with R)

● GWTR □ - □ -P7*/P80

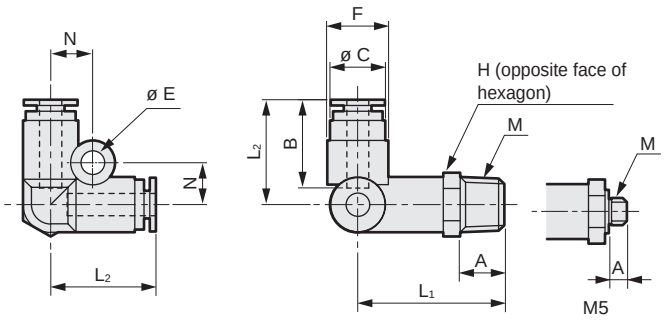

Model No.	Applicable tube O.D. ø	M	H	L_1	L_2	A	B	C	E	F	N	Min. bore size	Effective cross-sectional area mm²	Weight g
GWTR 4-M5	4	M5 × 0.8	10	22.5	19	3.4	16	10	4.2	11	7.5	2.5	4.3	11
GWTR 4- 6		R1/8	10	26.5	19	8	16	10	4.2	11	7.5	2.5	4.5	13
GWTR 4- 8		R1/4	14	30	19	11	16	10	4.2	11	7.5	2.5	4.5	20
GWTR 6-M5	6	M5 × 0.8	14	25	21.5	3.4	17.5	12.5	4.2	13.5	8.5	2.5	4.3	19
GWTR 6- 6		R1/8	14	30	21.5	8	17.5	12.5	4.2	13.5	8.5	4	10.5	22
GWTR 6- 8		R1/4	14	33	21.5	11	17.5	12.5	4.2	13.5	8.5	4	10.5	25
GWTR 6-10		R3/8	17	34.5	21.5	12	17.5	12.5	4.2	13.5	8.5	4	10.5	33
GWTR 8- 6	8	R1/8	17	32.5	24	8	19	14.5	4.2	15.5	9.5	6	23.5	28
GWTR 8- 8		R1/4	17	35.5	24	11	19	14.5	4.2	15.5	9.5	6	23.5	33
GWTR 8-10		R3/8	17	37	24	12	19	14.5	4.2	15.5	9.5	6	23.5	38
GWTR10- 8	10	R1/4	19	39.5	27.5	11	21.5	17.5	4.2	18.5	13	8	35.5	45
GWTR10-10		R3/8	19	41	27.5	12	21.5	17.5	4.2	18.5	13	8	35.5	52
GWTR10-15		R1/2	22	44	27.5	15	21.5	17.5	4.2	18.5	13	8	35.5	65
GWTR12- 8	12	R1/4	22	41.5	30	11	23	20	4.2	21	14	8.5	37.5	60
GWTR12-10		R3/8	22	43	30	12	23	20	4.2	21	14	8.5	37.5	68
GWTR12-15		R1/2	22	46	30	15	23	20	4.2	21	14	8.5	37.5	77

Note: "Clean room specifications" code is omitted in model number above.

SCPD3
SCM
SSD2
MDC2
SMG
LCM
LCR
LCG
LCX
STM
STG
STR2
MRL2
GRC
Cylinder switch
MN3E MN4E
4GA/B
M4GA/B
MN4GA/B
F.R (module unit)
Clean F.R
Precision R
Press gauge Diff. press gauge
Electro-pneumatic R
Speed controller
Auxiliary valve
Fitting/ tube
Clean air unit
Pressure sensor
Flow rate sensor
Valve for air blow
Ending

Dimensions: FY (with R)/double Y (with R)/tetrapod/FY

(Sales unit is 10 pcs./1 bag)

FY (with R)

● GWFY □ - □ -P7*/P80

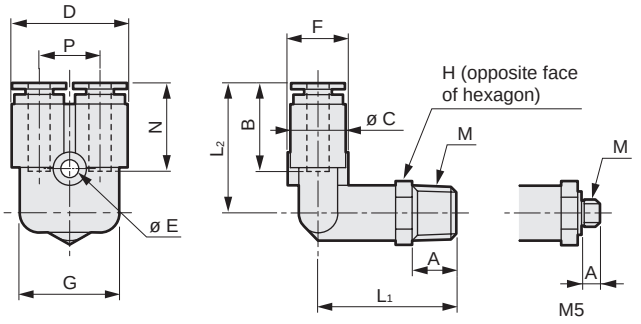

Model No.	Applicable tube O.D. ø	M	H	L_1	L_2	A	B	C	D	E	F	G	N	P	Min. bore size	Effective cross-sectional area mm²	Weight g
GWFY 4-M5	4	M5 × 0.8	10	21	23.5	3.4	16	10	21	3.2	11	18	15.5	11	2.5	4.5	12
GWFY 4- 6		R1/8	10	25	23.5	8	16	10	21	3.2	11	18	15.5	11	2.5	4.6	14
GWFY 4- 8		R1/4	14	28.5	23.5	11	16	10	21	3.2	11	18	15.5	11	2.5	4.6	20
GWFY 6-M5	6	M5 × 0.8	14	23	27	3.4	17.5	12.5	26	4.2	13.5	22.5	17	13.5	2.5	4.5	21
GWFY 6- 6		R1/8	14	28	27	8	17.5	12.5	26	4.2	13.5	22.5	17	13.5	4	10.5	23
GWFY 6- 8		R1/4	14	31	27	11	17.5	12.5	26	4.2	13.5	22.5	17	13.5	4	10.5	26
GWFY 6-10		R3/8	17	32.5	27	12	17.5	12.5	26	4.2	13.5	22.5	17	13.5	4	10.5	35
GWFY 8- 6	8	R1/8	17	30.5	29	8	19	14.5	30	4.2	15.5	26.5	18	15.5	6	23	30
GWFY 8- 8		R1/4	17	33.5	29	11	19	14.5	30	4.2	15.5	26.5	18	15.5	6	23	34
GWFY 8-10		R3/8	17	35	29	12	19	14.5	30	4.2	15.5	26.5	18	15.5	6	23	39
GWFY10- 8	10	R1/4	19	37.5	33	11	21.5	17.5	36	4.2	18.5	31.5	20	18.5	8	34.4	47
GWFY10-10		R3/8	19	39	33	12	21.5	17.5	36	4.2	18.5	31.5	20	18.5	8	34.4	53
GWFY10-15		R1/2	22	42	33	15	21.5	17.5	36	4.2	18.5	32.5	20	18.5	8	34.4	66
GWFY12- 8	12	R1/4	22	39.5	35.5	11	23	20	41	4.2	21	37	21.5	21	8.5	37.5	63
GWFY12-10		R3/8	22	41	35.5	12	23	20	41	4.2	21	37	21.5	21	8.5	37.5	71
GWFY12-15		R1/2	22	44	35.5	15	23	20	41	4.2	21	37	21.5	21	8.5	37.5	80

Note: "Clean room specifications" code is omitted in model number above.

Double Y (with R)

● GWWY □ - □ -P7*/P80

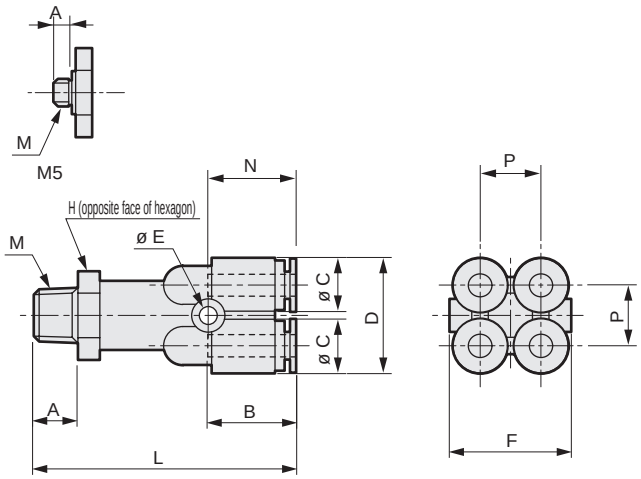

Model No.	Applicable tube O.D. ø	M	H	L	A	B	C	D	E	F	N	P	Effective cross-sectional area mm²	Weight g
GWWY4-M5	4	M5 × 0.8	14	42.5	3.4	16	10	21	3.2	22	15.5	11	4.3	23
GWWY4- 6		R1/8	14	47.5	8	16	10	21	3.2	22	15.5	11	9.7	25
GWWY4- 8		R1/4	14	50.5	11	16	10	21	3.2	22	15.5	11	9.7	28
GWWY6-M5	6	M5 × 0.8	17	46.5	3.4	17.5	12.5	26	3.2	27	17	13.5	4.3	36
GWWY6- 6		R1/8	17	51.5	8	17.5	12.5	26	3.2	27	17	13.5	23	34
GWWY6- 8		R1/4	17	54.5	11	17.5	12.5	26	3.2	27	17	13.5	23	39
GWWY6-10		R3/8	17	56	12	17.5	12.5	26	3.2	27	17	13.5	23	44

Note: "Clean room specifications" code is omitted in model number above.

Tetrapod shaped

● GWTR □ -0-P7*/P80

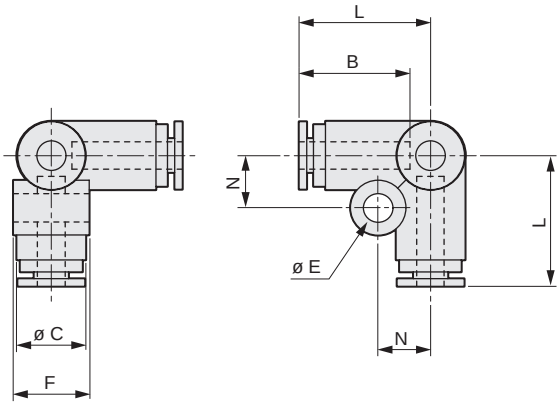

Model No.	Applicable tube O.D. ø	L	B	C	E	F	N	Min. bore size	Effective cross-sectional area mm²	Weight g
GWTR 4-0	4	19	16	10	4.2	11	7.5	2.5	4	7
GWTR 6-0	6	21.5	17.5	12.5	4.2	13.5	8.5	4	9.5	11
GWTR 8-0	8	24	19	14.5	4.2	15.5	9.5	6	12.5	14
GWTR10-0	10	27.5	21.5	17.5	4.2	18.5	13	8	29.5	24
GWTR12-0	12	30	23	20	4.2	21	14	10	35.5	31

Note: "Clean room specifications" code is omitted in model number above.

FY

● GWFY □ -0-P7*/P80

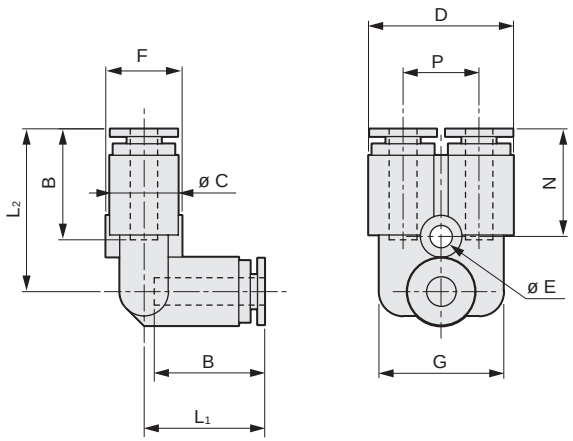

Model No.	Applicable tube O.D. ø	L_1	L_2	B	C	D	E	F	G	N	P	Min. bore size	Effective cross-sectional area mm²	Weight g
GWFY 4-0	4	17.5	23.5	16	10	21	3.2	11	18	15.5	11	2.5	4	8
GWFY 6-0	6	19.5	27	17.5	12.5	26	4.2	13.5	22.5	17	13.5	4	10	12
GWFY 8-0	8	22	29	19	14.5	30	4.2	15.5	26.5	18	15.5	6	21	16
GWFY10-0	10	25.5	33	21.5	17.5	36	4.2	18.5	31.5	20	18.5	8	29	25
GWFY12-0	12	28	35.5	23	20	41	4.2	21	37	21.5	21	10	35.5	34

Note: "Clean room specifications" code is omitted in model number above.

Dimensions: Double Y/blanking plug/L plug/C plug

(Sales unit is 10 pcs./1 bag)

Double Y
● GWWY □-0-P7*/P80

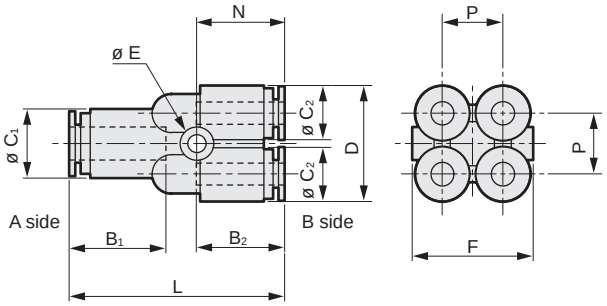

Model No.	Applicable tube O.D. ø A side	Applicable tube O.D. ø B side	L	B1	B2	C1	C2	D	E	F	N	P	Effective cross-sectional area mm²	Weight g
GWWY64-0	6	4	39	17.5	16	12.5	10	21	3.2	22	15.5	11	9	14
GWWY86-0	8	6	43	19	17.5	14.5	12.5	26	3.2	27	17	13.5	22	20

Note: "Clean room specifications" code is omitted in model number above.

Blanking plug
● GWP □-B-P7*/P80

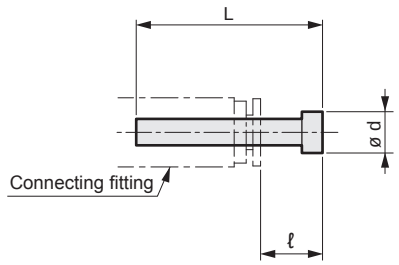

Material: polyamide resin

Model No.	Fitting port size ø	L	ℓ*	d	Weight g
GWJP 3-B	3.2	23.5	11	5	0.2
GWP 4-B	4	27	11	6	0.5
GWP 6-B	6	29	11.5	8	1
GWP 8-B	8	33	14	10	2
GWP10-B	10	40	18.5	12	3
GWP12-B	12	43	20	14	4

* Dimensions with CKD connecting fittings (GW Series) are shown.
Note: "Clean room specifications" code is omitted in model number above.

L plug
● GWP □-L-P7*/P80

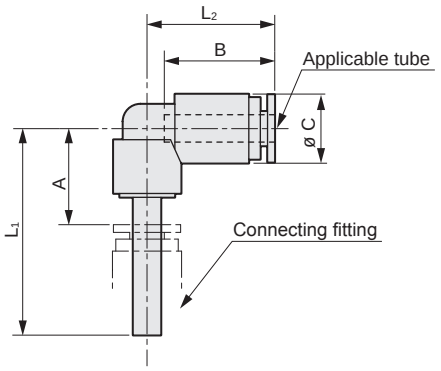

Model No.	Applicable tube O.D. ø	Fitting port size ø	L1	L2	A*	B	C	Min. bore size	Effective cross-sectional area mm²	Weight g
GWP 44-L	4	4	30	18.5	14	16	10	1.7	2.1	4
GWP 46-L		6	31	18.5	13.5	16	10	1.7	2.1	4
GWP 48-L		8	32.5	18.5	13.5	16	10	1.7	2.1	5
GWP 66-L	6	6	34	21	16.5	17.5	12.5	3.4	6.7	6
GWP 68-L		8	35.5	21	16.5	17.5	12.5	3.4	6.7	7
GWP 610-L		10	38	21	16.5	17.5	12.5	3.4	6.7	8
GWP 88-L	8	8	36.5	23.5	17.5	19	14.5	5.4	16.6	9
GWP 810-L		10	39	23.5	17.5	19	14.5	5.4	16.6	10
GWP 812-L		12	40	23.5	17	19	14.5	5.4	16.6	11
GWP1010-L	10	10	41.5	27	20	21.5	17.5	6.8	24.7	14
GWP1012-L		12	42.5	27	19.5	21.5	17.5	6.8	24.7	15
GWP1212-L	12	12	44.5	29.5	21.5	23	20	8.8	34	18

* Dimensions with CKD connecting fittings (GW Series) are shown.
Note: "Clean room specifications" code is omitted in model number above.

C plug
● GWP □-C-P7*/P80

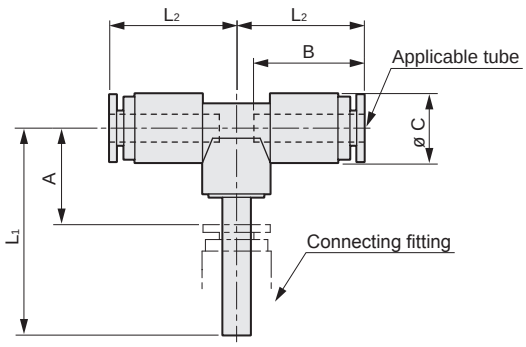

Model No.	Applicable tube O.D. ø	Fitting port size ø	L1	L2	A*	B	C	Min. bore size	Effective cross-sectional area mm²	Weight g
GWP 44-C	4	4	30	18.5	14	16	10	1.7	2.4	6
GWP 46-C		6	31	18.5	13.5	16	10	1.7	2.4	6
GWP 48-C		8	32.5	18.5	13.5	16	10	1.7	2.4	7
GWP 66-C	6	6	34	21	16.5	17.5	12.5	3.4	7.3	9
GWP 68-C		8	35.5	21	16.5	17.5	12.5	3.4	7.3	10
GWP 610-C		10	38	21	16.5	17.5	12.5	3.4	7.3	11
GWP 88-C	8	8	36.5	23.5	17.5	19	14.5	5.4	19.3	13
GWP 810-C		10	39	23.5	17.5	19	14.5	5.4	19.3	14
GWP 812-C		12	40	23.5	17	19	14.5	5.4	19.3	15
GWP1010-C	10	10	41.5	27	20	21.5	17.5	6.8	28.6	20
GWP1012-C		12	42.5	27	19.5	21.5	17.5	6.8	28.6	21
GWP1212-C	12	12	44.5	29.5	21.5	23	20	8.8	35.5	26

* Dimensions with CKD connecting fittings (GW Series) are shown.
Note: "Clean room specifications" code is omitted in model number above.

SCPD3
SCM
SSD2
MDC2
SMG
LCM
LCR
LCG
LCX
STM
STG
STR2
MRL2
GRC
Cylinder switch
MN3E MN4E
4GA/B
M4GA/B
MN4GA/B
F.R (module unit)
Clean F.R
Precision R
Press gauge Diff. press gauge
Electro-pneumatic R
Speed controller
Auxiliary valve
Fitting/ tube
Clean air unit
Pressure sensor
Flow rate sensor
Valve for air blow
Ending

Dimensions: Y plug/cap/manifold (single/with R)/manifold (single)

CAD

(Sales unit is 10 pcs./1 bag)

Y plug

● GWP □ -Y-P7*/P80

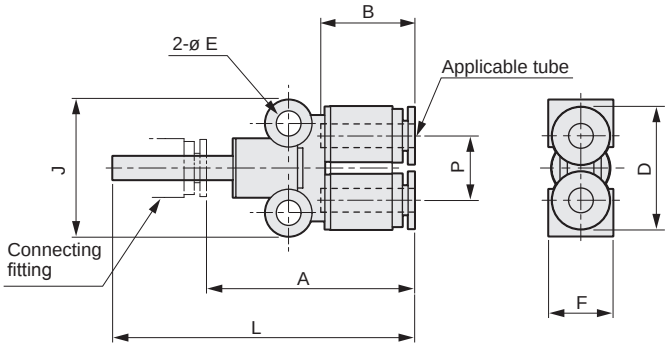

Model No.	Applicable tube O.D. ø	Fitting port size ø	L	A	B	D	E	F	J	P	Min. bore size	Effective cross-sectional area mm²	Weight g
GWP 44-Y	4	4	51.5	35.5	16	21	4.2	11	23	11	1.7	2.1	8
GWP 46-Y		6	52.5	35	16	21	4.2	11	23	11	2.5	5.8	8
GWP 48-Y		8	54	35	16	21	4.2	11	23	11	2.5	5.8	8
GWP 66-Y	6	6	55.5	38	17.5	26	4.2	13.5	25.5	13.5	3.9	9.1	11
GWP 68-Y		8	57	38	17.5	26	4.2	13.5	25.5	13.5	4	15.9	11
GWP 610-Y		10	59.5	38	17.5	26	4.2	13.5	25.5	13.5	4	15.9	12
GWP 88-Y	8	8	60	41	19	30	4.2	15.5	27	15.5	5.9	22.2	14
GWP 810-Y		10	62.5	41	19	30	4.2	15.5	27	15.5	6	24.9	15
GWP 812-Y		12	63.5	40.5	19	30	4.2	15.5	27	15.5	6	24.9	16
GWP1010-Y	10	10	70	48.5	21.5	36	4.2	18.5	30	18.5	6.8	28.2	23
GWP1012-Y		12	71	48	21.5	36	4.2	18.5	30	18.5	8	35.5	23
GWP1212-Y	12	12	76	53	23	41	4.2	21	32	21	8.8	36.3	29

* Dimensions with CKD connecting fittings (GW Series) are shown.
Note: "Clean room specifications" code is omitted in model number above.

Cap

● GWC □ -P7*/P80

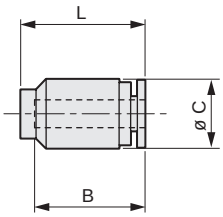

Model No.	Applicable tube O.D. ø	B	ø C	L	Weight g
GWC 4	4	16	10	18	2
GWC 6	6	17.5	12.5	19.5	3
GWC 8	8	19	14.5	21	4
GWC10	10	21.5	17.5	24	7
GWC12	12	23	20	26	9

Note: "Clean room specifications" code is omitted in model number above.

Manifold (single/with R)

● GWMF □ - □ -P7*/P80

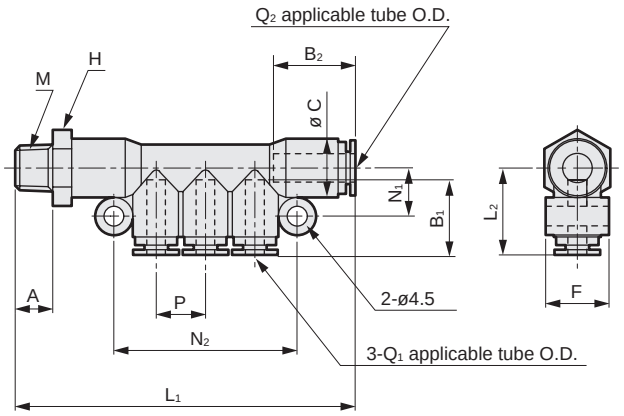

Model No.	Applicable tube O.D. ø		M	H	L_1	L_2	A	B_1	B_2	C	F	N_1	N_2	P	Effective cross-sectional area mm²	Weight g
	Q1	Q2														
GWMF 46- 6	4	6	R1/8	14	72.5	18.5	8	16	17.5	12.5	13.5	10.5	39	10.5	8.3	27
GWMF 48- 8	4	8	R1/4	17	77.5	19.5	11	16	19	14.5	15.5	11.5	39	10.5	24.2	37
GWMF 68- 8	6	8	R1/4	17	84.5	21	11	17.5	19	14.5	15.5	11.5	46.5	13	24.2	41
GWMF610-10	6	10	R3/8	19	91.5	22	12	17.5	21.5	17.5	18.5	13	46.5	13	35.5	56
GWMF810-10	8	10	R3/8	19	97.5	23.5	12	19	21.5	17.5	18.5	13	52.5	15	35.5	61

Note: "Clean room specifications" code is omitted in model number above.

Manifold (single)

● GWMF □ -0-P7*/P80

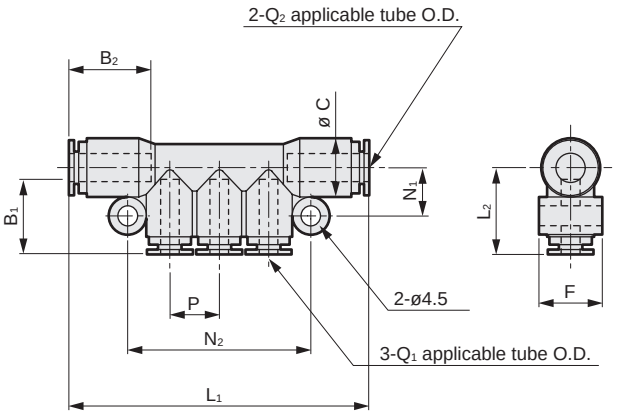

Model No.	Applicable tube O.D. ø		L_1	L_2	B_1	B_2	C	F	N_1	N_2	P	Effective cross-sectional area mm²	Weight g
	Q1	Q2											
GWMF 46-0	4	6	64	18.5	16	17.5	12.5	13.5	10.5	39	10.5	7.9	16
GWMF 48-0	4	8	66	19.5	16	19	14.5	15.5	11.5	39	10.5	22	18
GWMF 68-0	6	8	73	21	17.5	19	14.5	15.5	11.5	46.5	13	22	23
GWMF610-0	6	10	78.5	22	17.5	21.5	17.5	18.5	13	46.5	13	30	28
GWMF810-0	8	10	84.5	23.5	19	21.5	17.5	18.5	13	52.5	15	30	33

Note: "Clean room specifications" code is omitted in model number above.

Dimensions: Manifold (double/with R)/manifold (double)/insert ring

(Sales unit is 10 pcs./1 bag)

Manifold (double/with R)

● GWMF □ - □ -W-P7*/P80

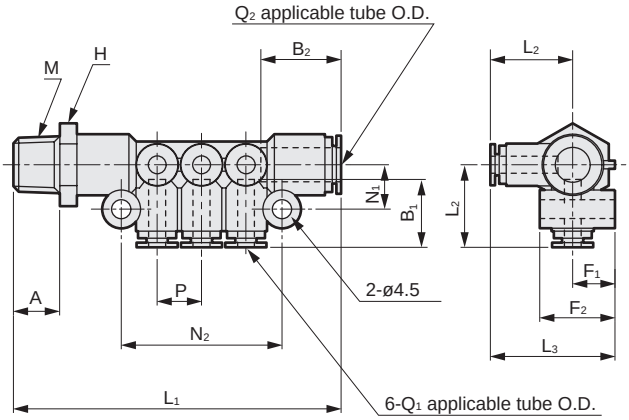

Model No.	Applicable tube O.D. ø Q1	Q2	M	H	L_1	L_2	L_3	A	B_1	B_2	F_1	F_2	N_1	N_2	P	Effective cross-sectional area mm²	Weight g
GWMF 48- 8-W	4	8	R1/4	17	77.5	19.5	29.5	11	16	19	10	17.5	10.5	38	10.5	24.3	43
GWMF 48-10-W	4	8	R3/8	17	79	19.5	29.5	12	16	19	10	17.5	10.5	38	10.5	23.5	48
GWMF610-10-W	6	10	R3/8	19	91.5	22	32	12	17.5	21.5	10	19.5	12	45	13	35.8	65
GWMF610-15-W	6	10	R1/2	19	94.5	22	32	15	17.5	21.5	10	19.5	12	45	13	35.8	78
GWMF812-10-W	8	12	R3/8	22	100	24.5	36	12	19	23	11.5	22	13	51	15	38.2	86
GWMF812-15-W	8	12	R1/2	22	103	24.5	36	15	19	23	11.5	22	13	51	15	38.2	95

Note: "Clean room specifications" code is omitted in model number above.

Manifold (double)

● GWMF □ -0-W-P7*/P80

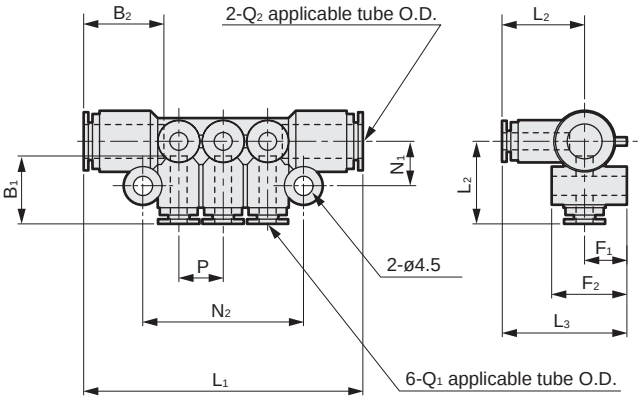

Model No.	Applicable tube O.D. ø Q1	Q2	L_1	L_2	L_3	B_1	B_2	F_1	F_2	N_1	N_2	P	Effective cross-sectional area mm²	Weight g
GWMF4 8-0-W	4	8	66	19.5	29.5	16	19	10	17.5	10.5	38	10.5	22	24
GWMF610-0-W	6	10	78.5	22	32	17.5	21.5	10	19.5	12	45	13	30.4	37
GWMF812-0-W	8	12	87	24.5	36	19	23	11.5	22	13	51	15	36	47

Note: "Clean room specifications" code is omitted in model number above.

Insert ring (for tube U-92* / U-95*) [Custom order product]

● INS-U □ -1-P7*/P80

Material: Brass + electroless nickeling

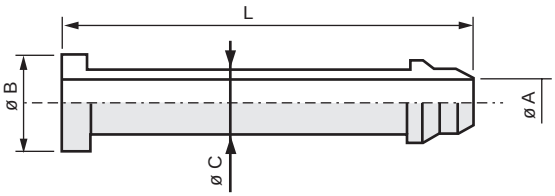

● Tube for tube U-92** / U-95**

Model No.	ø A	ø B	ø C	L	Weight g
INS-U32-1	1.1	2.2	1.7	12.7	0.2
INS-U04-1	1.1	3	1.8	17	0.3
INS-U06-1	3	5	3.8	18	1
INS-U08-1	4	7	4.8	21	1.2
INS-U10-1	5.5	9	6.3	23.5	1.7
INS-U12-1	7	11	7.8	25	2.5

* Tube for NU is available as custom-order.
* Use insert ring if tube U-92, U-95* or NU is used for a vacuum circuit.
Note: "Clean room specifications" code is omitted in model number above.

GWJ

Fitting (small size)

Port size M3 to 1/8 (Rc or R)

RoHS CAD

● Small push-in fittings suitable for various applications

Space saving with less spacing for body. It minimizes dead space of piping drastically.

■ Straight

Single straight/ GWJS □ - □ -P7*/P80

Applicable tube O.D. ø
3.2
4
6

· page: 970

Female straight/ GWJS3-□-M-P7*/P80

Applicable tube O.D. ø
3.2

· page: 970

Bulk head/ GWJS3-0-X-P7*/P80

Applicable tube O.D. ø
3.2

· page: 970

Straight/ GWJS3-0-P7*/P80

Applicable tube O.D. ø
3.2

· page: 970

Different diameter straight/ GWJS □ -0-P7*/P80

Applicable tube O.D. ø
3.2/4
3.2/6

· page: 970

■ Elbow

Single elbow/ GWJL □ - □ -P7*/P80

Applicable tube O.D. ø
3.2
4
6

· page: 970

Long elbow/ GWJL □ - □ -L-P7*/P80

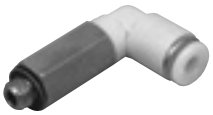

Applicable tube O.D. ø
3.2
4
6

· page: 971

Elbow/ GWJL3-0-P7*/P80

Applicable tube O.D. ø
3.2

· page: 971

■ Tee

Both ports tee/ GWJT3- □ -P7*/P80

Applicable tube O.D. ø
3.2

· page: 971

D tee/ GWJT3- □ -D-P7*/P80

Applicable tube O.D. ø
3.2

· page: 971

Tee/ GWJT3-0-P7*/P80

Applicable tube O.D. ø
3.2

· page: 971

Y tee/ GWJY □ -0-P7*/P80

Applicable tube O.D. ø
3.2/3.2
3.2/4

· page: 971

■ Plug

Blanking plug/ GWJP3-B-P7*/P80

Applicable tube O.D. ø
3.2

· page: 972

● Sales unit is 10 pcs./1 bag

Specifications

Descriptions	GWJ
Working fluid	Compressed air
Max. working pressure MPa	1.0
Ambient temperature °C	-10 to 60 (no freezing)
Applicable tube	Urethane tube (model No. U-9204, U-9206, U-9532, U-9504, U-9506, NU-04, NU-06) Note

Note: Refer to page 991 for tube dimensions, ambient temperature and working pressure.

How to order

GWJ S 3 - 6 - M - P80

(A) (B) (C) (D) (E)

* Refer to model No. sections on dimensions page (pages 970 to 972) for combination of model No.

(A) Shape	
S	Straight
L	Elbow
Y	Y tee
T	Tee
P	Plug

(B) Applicable tube O.D.	
3	ø3.2
4	ø4
6	ø6

(C) Port size	
M3	M3 × 0.5
M5	M5 × 0.8
6	R1/8
0	No thread
B	Blanking plug

(D) Other combination	
L	Long
D	D type
X	Bulk head
M	Female

(E) Clean room specifications		
	Structure/treatment	Material restriction
P70	Dust generation preventing	-
P74	Dust generation preventing	Copper-based/silicon-based/halogen-based materials (fluorine, chlorine, bromine) are prohibited
P80	Oil-prohibited	-

Note: Sales unit is 10 pcs./1 bag.

Note 1: P80 Series
- Metal material: Brass + electroless nickeling
- Sealant material: Nitrile rubber (NBR)
- Without grease: Grease is not used as this is oil-prohibited specifications.
- No sealant for screw parts: PTFE resin coating is not applied.

For this reason, it is same product as P84 Series.
Specify in P80 Series when placing an order.

Note 2: Push ring colors are:
- P70: Pink
- P74: Orange
- P80: Light blue

Dimensions: Single straight/female straight/bulk head/straight/different diameter straight/single elbow

CAD

(Sales unit is 10 pcs./1 bag)

Single straight

● GWJS □ - □ -P7*/P80

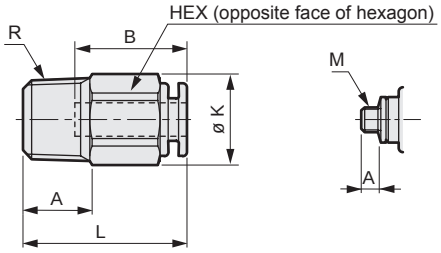

Dimensions with * are for model with punched hexagon hole.

Model No.	Applicable tube O.D. ø	R M	HEX	K	L	A	B	Min. bore size	Effective cross-sectional area mm²	Weight g
GWJS3-M3	3.2	M3 × 0.5	8	8.8	17	2.4	12.5	1.2	0.9	2.4
GWJS3-M5		M5 × 0.8	8	8.8	18	3.4	12.5	2.5	2.5	3
GWJS3- 6		1/8	10	11	16.5	8	12.5	2.5*	2.5	5.9
GWJS4-M3	4	M3 × 0.5	10	11	18	2.4	13.5	1.2	0.9	7.1
GWJS4-M5		M5 × 0.8	10	11	19	3.4	13.5	2.5	4	5.2
GWJS4- 6		1/8	10	11	20	8	13.5	2.5*	4	7.1
GWJS6-M5	6	M5 × 0.8	11	12.1	20	3.4	14.5	2.5	4	4.9
GWJS6- 6		1/8	11	12.1	21.5	8	14.5	4*	11	6.8

Note: "Clean room specifications" code is omitted in model number above.

Female straight

● GWJS3- □ -M-P7*/P80

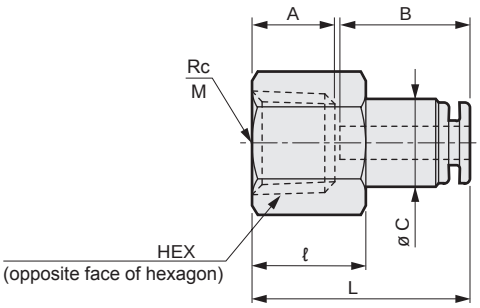

Model No.	Applicable tube O.D. ø	Rc M	HEX	L	A	B	C	ℓ	Min. bore size	Effective cross-sectional area mm²	Weight g
GWJS3-M3-M	3.2	M3 × 0.5	8	17.5	4	12.5	7.8	7.0	2.5	2.5	4
GWJS3-M5-M		M5 × 0.8	8	18.5	5	12.5	7.8	8.0	2.5	2.5	4
GWJS3-6-M		1/8	12	21.5	8	12.5	8.5	11.0	2.5	2.5	4

Note: "Clean room specifications" code is omitted in model number above.

Bulk head

● GWJS3-0-X-P7*/P80

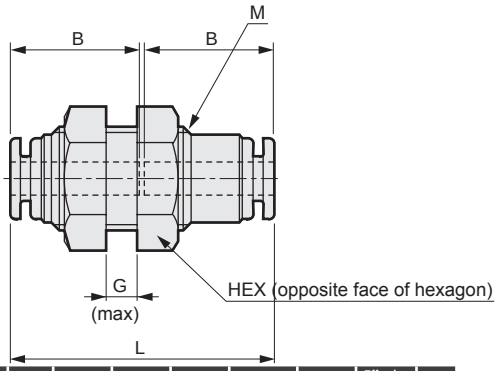

Model No.	Applicable tube O.D. ø	L	B	HEX	Min. bore size	M	Panel thickness/G	Panel bore size	Effective cross-sectional area mm²	Weight g
GWJS3-0-X	3.2	26.5	12.5	12	2.5	M10 × 1.0	5	10.5	2.5	9.8

Note: "Clean room specifications" code is omitted in model number above.

Straight

● GWJS3-0-P7*/P80

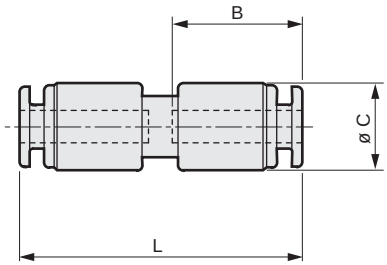

Model No.	Applicable tube O.D. ø	L	B	C	Min. bore size	Effective cross-sectional area mm²	Weight g
GWJS3-0	3.2	27.5	12.5	8.5	2.2	2.5	2.4

Note: "Clean room specifications" code is omitted in model number above.

Different diameter straight

● GWJS □ -0-P7*/P80

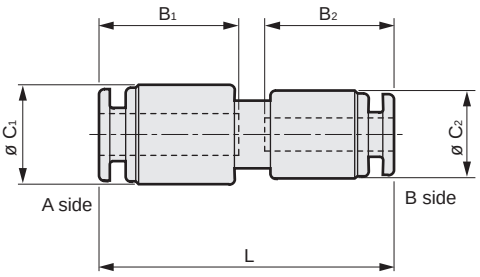

Model No.	Applicable tube O.D. ø		L	B1	B2	C1	C2	Min. bore size	Effective cross-sectional area mm²	Weight g
	A side	B side								
GWJS34-0	4	3.2	28.5	13.5	12.5	9.6	8.5	2.2	2.5	3.1
GWJS36-0	6	3.2	28.5	14.5	12.5	11.8	8.8	2.2	2.5	4.1

Note: "Clean room specifications" code is omitted in model number above.

Single elbow

● GWJL □ - □ -P7*/P80

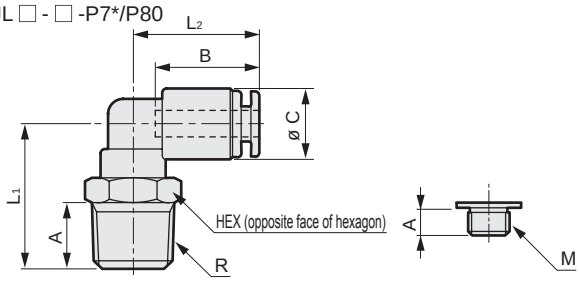

Model No.	Applicable tube O.D. ø	R M	HEX	L1	L2	A	B	C	Min. bore size	Effective cross-sectional area mm²	Weight g
GWJL3-M3	3.2	M3 × 0.5	8	13	15.5	2.4	12.5	8.5	1.2	0.8	3.3
GWJL3-M5		M5 × 0.8	8	13	15.5	3.4	12.5	8.5	2.2	2.5	3.6
GWJL3- 6		1/8	10	17.5	15.5	8	12.5	8.5	2.2	2.3	6
GWJL4-M3	4	M3 × 0.5	8	13	16.5	2.4	13.5	9.6	1.2	0.8	4
GWJL4-M5		M5 × 0.8	8	13	16.5	3.4	13.5	9.6	2.5	3	4.4
GWJL4- 6		1/8	10	17.5	16.5	8	13.5	9.6	2.5	3	6.8
GWJL6-M5	6	M5 × 0.8	10	15.5	18.5	3.4	14.5	11.8	2.5	3.5	7
GWJL6- 6		1/8	10	18.5	18.5	8	14.5	11.8	4	9.5	8.4

Note: "Clean room specifications" code is omitted in model number above.

Dimensions: Long elbow/elbow/both ports tee/D tee/tee/Y tee

(Sales unit is 10 pcs./1 bag)

Long elbow

● GWJL □ - □ -L-P7*/P80

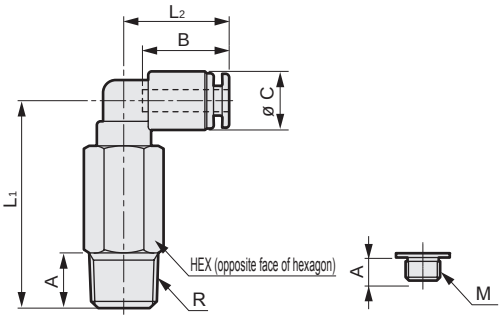

Model No.	Applicable tube O.D. ø	R M	HEX	L1	L2	A	B	C	Min. bore size	Effective cross-sectional area mm²	Weight g
GWJL3-M3-L	3.2	M3 × 0.5	8	25.5	15.5	2.4	12.5	8.5	1.2	0.8	8.2
GWJL3-M5-L		M5 × 0.8	8	25.5	15.5	3.4	12.5	8.5	2.2	2.3	8.6
GWJL3- 6-L		1/8	10	30	15.5	8	12.5	8.5	2.2	2.3	13
GWJL4-M5-L	4	M5 × 0.8	8	25.5	16.5	3.4	13.5	9.6	2.5	3	9.4
GWJL4- 6-L		1/8	10	30	16.5	8	13.5	9.6	2.5	3	14
GWJL6-M5-L	6	M5 × 0.8	10	30.5	18.5	3.4	14.5	11.8	2.5	3.5	16
GWJL6- 6-L		1/8	10	33.5	18.5	8	14.5	11.8	4	8.5	16

Note: “Clean room specifications” code is omitted in model number above.

Elbow

● GWJL3-0-P7*/P80

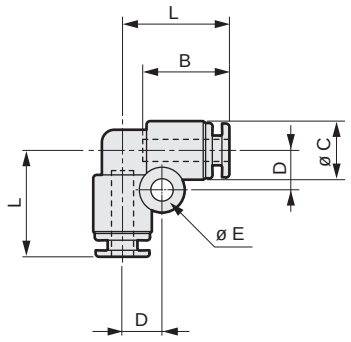

Model No.	Applicable tube O.D. ø	L	B	C	D	E	Min. bore size	Effective cross-sectional area mm²	Weight g
GWJL3-0	3.2	15.5	12.5	8.5	5.7	3.2	2.2	2.3	2.8

Note: “Clean room specifications” code is omitted in model number above.

Both ports tee

● GWJT3- □ -P7*/P80

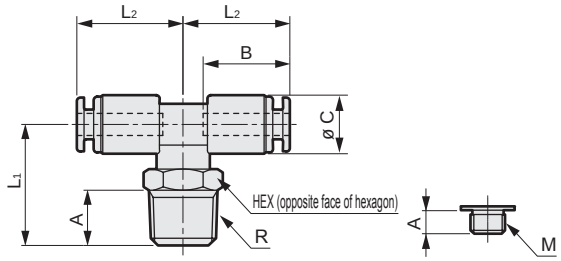

Model No.	Applicable tube O.D. ø	R M	HEX	L1	L2	A	B	C	Min. bore size	Effective cross-sectional area mm²	Weight g
GWJT3-M3	3.2	M3 × 0.5	8	13	15.5	2.4	12.5	8.5	1.2	0.9	4.4
GWJT3-M5		M5 × 0.8	8	13	15.5	3.4	12.5	8.5	2.2	2.7	4.7
GWJT3-6		1/8	10	17.5	15.5	8	12.5	8.5	2.2	2.7	7.1

Note: “Clean room specifications” code is omitted in model number above.

D tee

● GWJT3- □ -D-P7*/P80

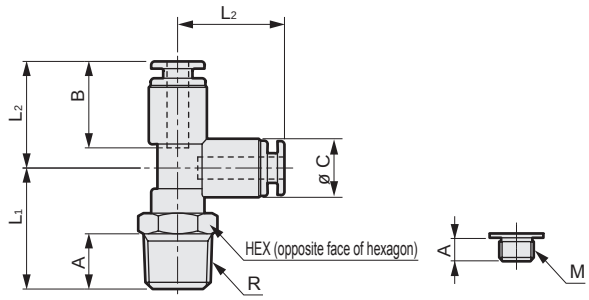

Model No.	Applicable tube O.D. ø	R M	HEX	L1	L2	A	B	C	Min. bore size	Effective cross-sectional area mm²	Weight g
GWJT3-M3-D	3.2	M3 × 0.5	8	13	15.5	2.4	12.5	8.5	1.2	0.9	4.4
GWJT3-M5-D		M5 × 0.8	8	13	15.5	3.4	12.5	8.5	2.2	2.7	4.8
GWJT3-6-D		1/8	10	17.5	15.5	8	12.5	8.5	2.2	2.7	7.2

Note: “Clean room specifications” code is omitted in model number above.

Tee

● GWJT3-0-P7*/P80

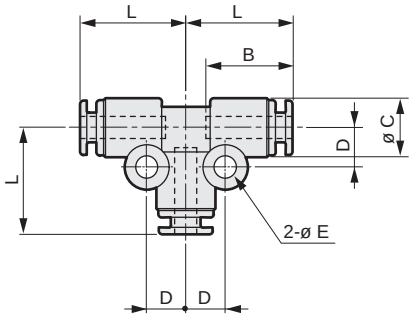

Model No.	Applicable tube O.D. ø	L	B	C	D	E	Min. bore size	Effective cross-sectional area mm²	Weight g
GWJT3-0	3.2	15.5	12.5	8.5	5.7	3.2	2.2	2.7	2.4

Note: “Clean room specifications” code is omitted in model number above.

Y tee

● GWJY □ -0-P7*/P80

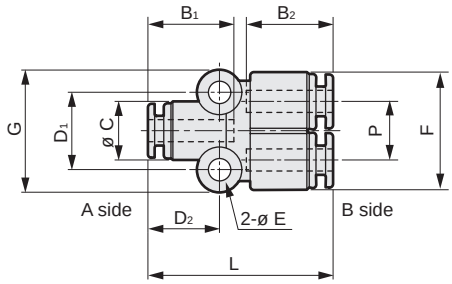

Model No.	Applicable tube O.D. ø		L	B1	B2	C	D1	D2	E	F	P	G	Effective cross-sectional area mm²	Weight g
	A side	B side												
GWJY33-0	3.2	3.2	27	12.5	12.5	8.5	11.2	10.5	3.2	17	8.5	17.7	2.7	4
GWJY43-0	4	3.2	28.5	13.5	12.5	9.6	12.2	12	3.2	17	8.5	18.7	2.7	4.9

Note: “Clean room specifications” code is omitted in model number above.

SCPD3
SCM
SSD2
MDC2
SMG
LCM
LCR
LCG
LCX
STM
STG
STR2
MRL2
GRC
Cylinder switch
MN3E MN4E
4GA/B
M4GA/B
MN4GA/B
F.R (module unit)
Clean F.R
Precision R
Press gauge Diff. press gauge
Electro-pneumatic R
Speed controller
Auxiliary valve
Fitting/ tube
Clean air unit
Pressure sensor
Flow rate sensor
Valve for air blow
Ending

Dimensions: Blanking plug

(Sales unit is 10 pcs./1 bag)

Blanking plug
- GWJP3-B-P7*/P80
- GWP □ -B-P7*/P80

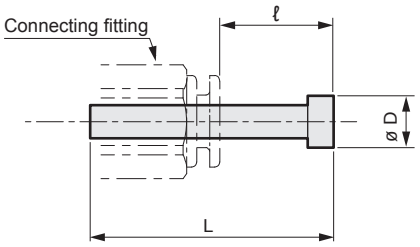

Material: Polyamide

Model No.	Connecting fitting Diameter ø	L	ℓ*	D	Weight g
GWJP3-B	3.2	23.5	11	5	0.2
GWP 4-B	4	27	11	6	0.5
GWP 6-B	6	29	11.5	8	1

* Dimensions with CKD connecting fittings (GW and GWJ Series) are shown.
Note: “Clean room specifications” code is omitted in model number above.

MEMO

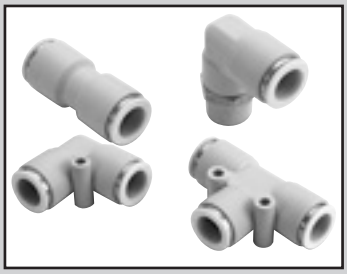

Stainless steel fitting

ZW Series

- Port size: M5 to R1/2
- Applicable tube: ø4 to ø12

RoHS

Specifications

Descriptions	ZW
Working fluid	Compressed air
Max. working pressure MPa	1.0
Negative pressure kPa	-100 *2
Ambient temperature °C	-10 to 60 (no freezing)
Applicable tube	Urethane tube (U-92**, U-95**, NU-**) *1

*1: Refer to page 991 for tube dimensions, ambient temperature and working pressure.
*2: Use an insert ring when using urethane tube (U-92**, U-95**, NU-**) under vacuum pressure.
(This is a customized order. Contact CKD for details.)

How to order

* Refer to model No. sections on dimensions page (page 975) for combination of model No.

ZW - L 6 - 8 - P80
A B C D

A Shape	
S	Straight
L	Elbow
T	Tee

B Applicable tube O.D.	
4	ø4
6	ø6
8	ø8
10	ø10
12	ø12

C Port size	
M5	M5 × 0.8
6	R1/8
8	R1/4
10	R3/8
15	R1/2
0	No thread

D Clean room specifications	
	Treatment
P80	Oil-prohibited

Note: Sales unit is 1 piece.

Note 1: P80 Series
- Metal material: Stainless steel
- Sealant material: Nitrile rubber (NBR)
- Without grease: Grease is not used as this is oil-prohibited specifications.
- No sealant for screw parts: PTFE resin coating is not applied.

For this reason, same product as P84 Series.
Specify as P80 Series when placing an order.
Note 2: P70/P74 Series are not set. Specify as P80 Series when placing an order.
Note 3: Color of push ring is light blue.

Dimensions

Single straight

● ZW-S □ - □ -P80

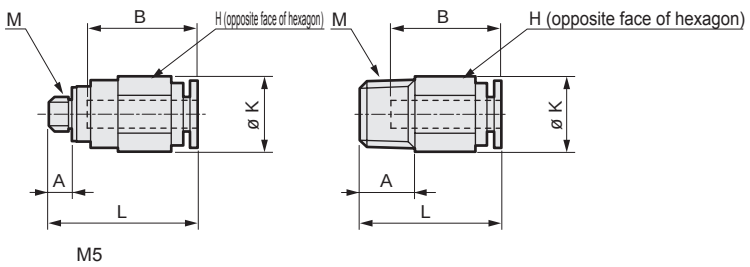

Model No.	Applicable tube O.D. ø	M	H	K	L	A	B	Min. bore size	Effective cross-sectional area mm²	Weight g
ZW-S 4-M5	4	M5 × 0.8	10	11	21.5	4	16	2.5	4	6.7
ZW-S 4- 6		R1/8	10	11	20.5	8	16	2.5	4	7.8
ZW-S 4- 8		R1/4	14	15	19.5	11	16	2.5	4	15
ZW-S 6-M5	6	M5 × 0.8	12	13	23	4	17.5	2.5	4.4	8.6
ZW-S 6- 6		R1/8	12	13	23	8	17.5	4	10.3	9.5
ZW-S 6- 8		R1/4	14	15	23.5	11	17.5	4	10.3	17
ZW-S 6-10		R3/8	17	19.6	21.5	12	17.5	4	10.3	26
ZW-S 8- 6	8	R1/8	14	15.8	28	8	19	5	17.5	16
ZW-S 8- 8		R1/4	14	15.8	27	11	19	6	22.4	17
ZW-S 8-10		R3/8	17	19.6	22.5	12	19	6	22.4	23
ZW-S10- 8	10	R1/4	17	19.6	32.5	11	21.5	8	30.5	26
ZW-S10-10		R3/8	17	19.6	28.5	12	21.5	8	30.5	26
ZW-S10-15		R1/2	22	24	26.5	15	21.5	8	30.5	46
ZW-S12-10	12	R3/8	19	21	30.5	12	23	10	40	29
ZW-S12-15		R1/2	22	24	29.5	15	23	10	40	47

Note: “Clean room specifications” code is omitted in model number above.

Elbow

(Sales unit is 1 pcs./1 bag)

● ZW-L □ - □ -0-P80

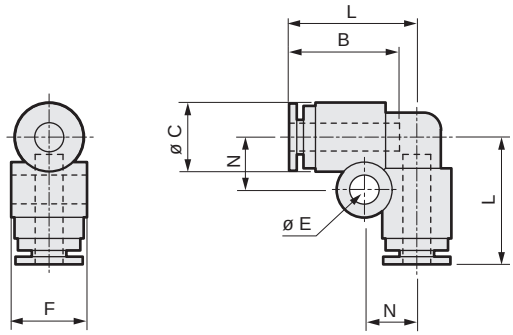

Model No.	Applicable tube O.D. ø	L	B	C	N	E	F	Min. bore size	Effective cross-sectional area mm²	Weight g
ZW-L 4-0	4	18.5	16	10	7.5	4.2	11	2.5	3	5.2
ZW-L 6-0	6	21	17.5	12.5	8.5	4.2	13.5	4	7.5	7.7
ZW-L 8-0	8	23.5	19	14.5	9.5	4.2	15.5	6	17	9.5
ZW-L10-0	10	27	21.5	17.5	11	4.2	18.5	8	25.5	16
ZW-L12-0	12	29.5	23	20	12	4.2	21	10	34	20

Note: “Clean room specifications” code is omitted in model number above.

Tee

● ZW-T □ -0-P80

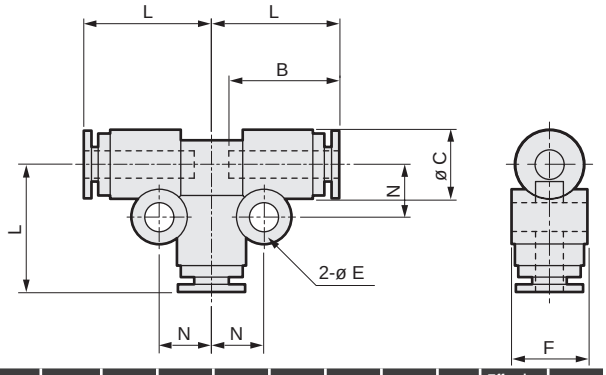

Model No.	Applicable tube O.D. ø	L	B	C	E	F	N	Min. bore size	Effective cross-sectional area mm²	Weight g
ZW-T 4-0	4	18.5	16	10	4.2	11	7.5	2.5	3.6	8.2
ZW-T 6-0	6	21	17.5	12.5	4.2	13.5	8.5	4	9.7	12
ZW-T 8-0	8	23.5	19	14.5	4.2	15.5	9.5	6	22	15
ZW-T10-0	10	27	21.5	17.5	4.2	18.5	11	8	30	23
ZW-T12-0	12	29.5	23	20	4.2	21	12	10	35.5	29

Note: “Clean room specifications” code is omitted in model number above.

Single elbow

● ZW-L □ - □ -P80

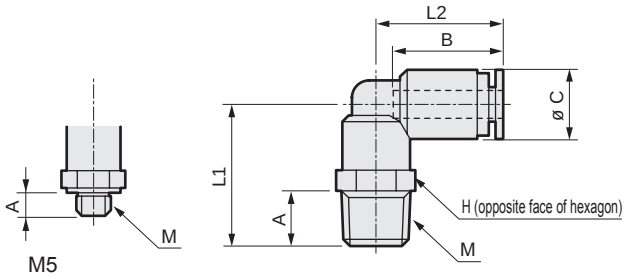

Model No.	Applicable tube O.D. ø	M	H	L_1	L_2	A	B	C	Min. bore size	Effective cross-sectional area mm²	Weight g
ZW-L 4-M5	4	M5 × 0.8	8	15	18	4	16	10	2.5	3.2	4.9
ZW-L 4- 6		R1/8	10	20.5	18.5	8	16	10	2.5	3.2	8
ZW-L 4- 8		R1/4	14	24	18.5	11	16	10	2.5	3.2	15
ZW-L 6-M5	6	M5 × 0.8	10	15	20	4	17.5	12.5	2.5	4.2	6.8
ZW-L 6- 6		R1/8	12	24	21	8	17.5	12.5	4	8	13
ZW-L 6- 8		R1/4	14	27.5	21	11	17.5	12.5	4	8	17
ZW-L 6-10		R3/8	17	29	21	12	17.5	12.5	4	8	25
ZW-L 8- 6	8	R1/8	14	25.5	23.5	8	19	14.5	6	18	16
ZW-L 8- 8		R1/4	14	28.5	23.5	11	19	14.5	6	18	19
ZW-L 8-10		R3/8	17	30	23.5	12	19	14.5	6	18	27
ZW-L10- 8	10	R1/4	17	31	27	11	21.5	17.5	8	27	27
ZW-L10-10		R3/8	17	32.5	27	12	21.5	17.5	8	27	32
ZW-L10-15		R1/2	22	35.5	27	15	21.5	17.5	8	27	46
ZW-L12-10	12	R3/8	19	34.5	29.5	12	23	20	9	35	40
ZW-L12-15		R1/2	22	37.5	29.5	15	23	20	9	35.5	52

Note: “Clean room specifications” code is omitted in model number above.

Straight

● ZW-S □ -0-P80

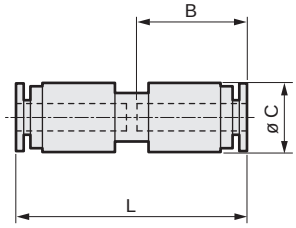

Model No.	Applicable tube O.D. ø	L	B	C	Min. bore size	Effective cross-sectional area mm²	Weight g
ZW-S 4-0	4	33.5	16	10	2.5	4	4.5
ZW-S 6-0	6	36.5	17.5	12.5	4	10	6.9
ZW-S 8-0	8	39.5	19	14.5	6	22	8
ZW-S10-0	10	45	21.5	17.5	8	30	14
ZW-S12-0	12	47.5	23	20	10	35	17

Note: “Clean room specifications” code is omitted in model number above.

Fiber tube

Fiber tube series name		Port size O.D. × I.D.	Color								Specific fitting		Page
			Black	White	Transparent	Transparent blue	Transparent green	Yellow	Red	Green			
Antistatic	UP-9102-F1 Series (Note: Barbed fitting-specific)	ø1.8 × ø1.0	●	●	●	●	●	▲	▲		PTN*2 Series (Note)	Barbed fitting with retaining collar	978
Clean room	EH Series	ø1.8 × ø1.2	●		●						CG Series	Push-in fitting	982

(Note) For antistatic types, the fittings dedicated to individual tubes should be used.
Never use a combination of mismatched parts. (Disconnection of fiber tubes or leakage may happen.)

▲: Custom order product

Features

Fiber tube is extremely thin, flexible air tube comparable to lead wire that enables easy piping in a narrow space or short distance. In addition, the tube resistance (tube stress) after piping is much smaller than those of conventional products and gives almost no effect on the device accuracy. Fiber tube is suitable for small bore size air cylinder piping and saves space of the system.

Variety of product lineups

Antistatic and dust-proof tube (UP-F1 Series)

Antistatic measures are installed to protect from static and dust.

Clean model (EH series)

To meet the clean room specifications, clean models made of high corrosion resistance materials (special polyolefin for tubes, stainless materials for fittings, etc.) are introduced to the series.
These are suitable in the fields requiring clean environment, such as semiconductor manufacturing, medical or food industry.

Energy saving/space saving

Ultrafine tube with O.D. ø1.0.
Can save the piping space considerably. And the small tube capacity can save more energy.

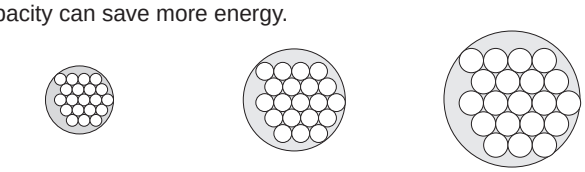

Fiber tube ø1.8 × 20: 80 mm²
Conventional products ø3.2 × 20: 253 mm²
Conventional products ø4.0 × 20: 396 mm²

No effect on device accuracy

Repelling force of the tube after piping is reduced to be equivalent to a lead wire, so adverse effects on device accuracy are greatly minimized.

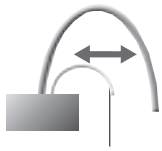

Pipe stress is small

Flexible piping

Excellent flexibility and flexible in mounting, enabling difficult piping in a narrow space or a short distance from 200 to 300 mm.

Dedicated fittings

One-touch detachable (CG Series)

With the fitting push-ring held down, the tube can be detached just by inserting/removing it. (EH Series)

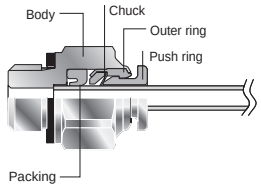

Retaining collar (PTN*2 Series)

The retaining collar for protection can be installed by drawing the fiber tube through the retaining collar to insert into the specific fitting. (UP-9102-F1 Series)

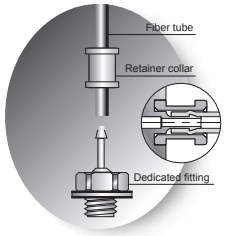

Series variation

Antistatic Fiber Tube

Tube size ø1.8 × ø1.0

Dedicated fitting

Port size M3, M5, R1/8, ø4, ø6

Fiber tube

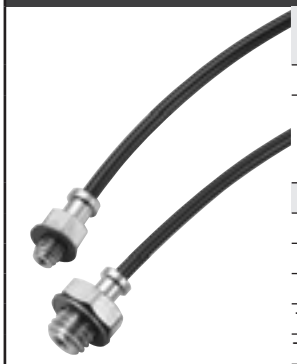

O.D. × I.D. (mm)
ø1.8 × ø1.0

Color
Black
White
Transparent
Transparent blue
Transparent green
Red (custom order)
Yellow (custom order)

・page: 978

Dedicated fitting

■ Straight

Applicable tube O.D. ø
1.3

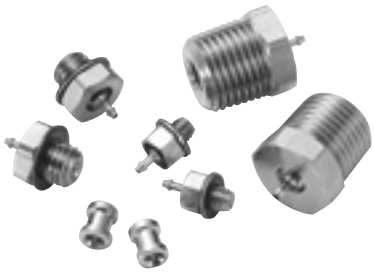

・page: 980

■ Elbow

Applicable tube O.D. ø
1.8

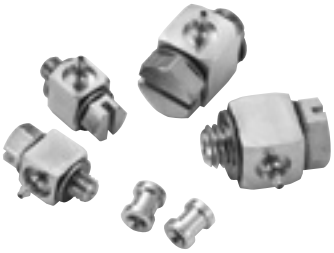

・page: 980

■ Barbed nipple

Applicable tube O.D. ø
1.8/3.2
1.8/4
1.8/6

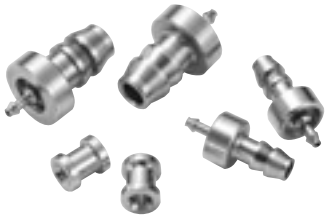

・page: 980

⚠ Always read the "Safety precautions" before use.

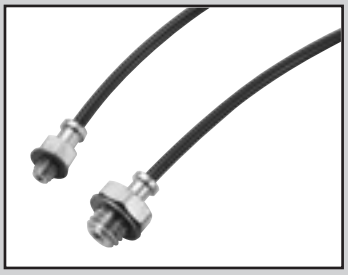

Fiber tube

● O.D.: 1.8 mm

Specifications

● Tube

Descriptions	UP-9102-20-*-F1-P80
Working fluid	Compressed air
Working pressure (20°C) (*1)	-100 kPa to 0.7 MPa
Ambient temperature °C	-10 to 60 (no freezing)
O.D. × I.D. mm	1.8 × 1.0
Inner diametral accuracy	±0.1
Outer diametral accuracy	±0.1
Min. installation radius mm	4
Burst pressure (20°C) MPa	2.1 (reference value)
Volume resistance ratio Ω·cm	1×10^{8} or less (black) 1×10^{12} or less (other than black)
Material	Conductive urethane
Color	Black, white, transparent, transparent blue, transparent green, yellow (*2), red (*2)

● Dedicated fitting

Descriptions	PTN*
Port size	M3, M5, $R^{1}/_{8}$, ø3.2 (*4), ø4 (*4), ø6 (*4)
Working fluid	Compressed air
Working pressure	-100 kPa to 0.7 MPa
Ambient temperature °C	-10 to 60 (no freezing)
Applicable tube	UP-9102-20-*-F1
Effective cross-sectional area mm^2	Straight, barbed nipple: 0.3 elbow: 0.2
Flow rate (*3) ℓ/min (ANR)	Straight, barbed nipple: 20 elbow: 13

*1 For the working pressure, refer to the figure of "Ambient temperature and pressure (use/burst)".
*2 Custom order.
*3 Flow rate is the atmospheric pressure conversion at 0.5 MPa.
*4 Applicable tube: Urethane tube (Model No. U-9504, U-9506)

How to order

● Tube

UP-91 02 - 20 - W - F1 - P80

- 02: Tube size ø1.8 × ø1.0 (O.D. × I.D.)
- 20: Length per roll 20 m
- W: Ⓐ Tube color
- F1: Antistatic
- P80: Ⓑ Clean room specifications

Ⓐ Tube color	
Blank	Black
W	White
C	Transparent
CB	Transparent blue
CG	Transparent green
Y	Yellow (Note)
R	Red (Note)

Note: Custom order product

Ⓑ Clean room specifications	
	Treatment
P80	Oil-prohibited

● Dedicated fitting: sales unit is 1 set (10 pcs.)

[Straight]

PTN2 - M3 - P80

- M3: Ⓐ
- P80: Ⓑ

Ⓐ Piping size	
M3	M3 × 0.5
M5	M5 × 0.8
6	R $^1/_8$

Ⓑ Clean room specifications (Note 1)	
	Treatment
P80	Oil-prohibited

[Elbow]

PTNL2 - M3 - P80

- M3: Ⓐ
- P80: Ⓑ

Ⓐ Piping size	
M3	M3 × 0.5
M5	M5 × 0.8

Ⓑ Clean room specifications (Note 1)	
	Treatment
P80	Oil-prohibited

[Barbed nipple]

PTN2 4 - 0 - P80

- 4: Ⓐ
- P80: Ⓑ

Ⓐ Applicable tube O.D. (Note 2)	
4	ø3.2, ø4
6	ø6

Ⓑ Clean room specifications (Note 1)	
	Treatment
P80	Oil-prohibited

Note 2: Applicable tube
(model No. U-92**)
Urethane tube
(model No. U-9504, U-9506)

Note 1: P80 Series
- Metal material: Brass + electroless nickeling
- Sealant material: Nitrile rubber (NBR)
- Without grease: Grease is not used as this is oil-prohibited specifications.
- No sealant for screw parts: PTFE resin coating is not applied.

Specify as P80 Series when placing an order, as P70, P74, and P84 are same products.

Characteristics graph

● Ambient temperature and pressure (use/burst)

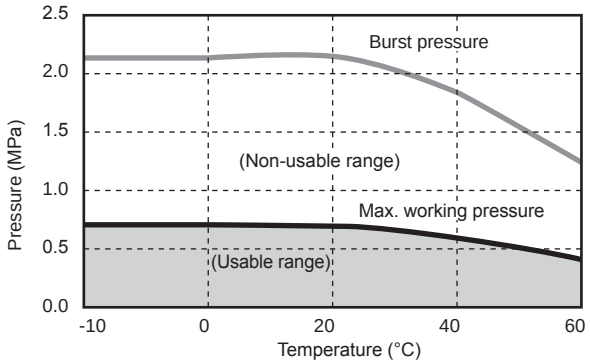

● Tube length and effective cross-sectional area

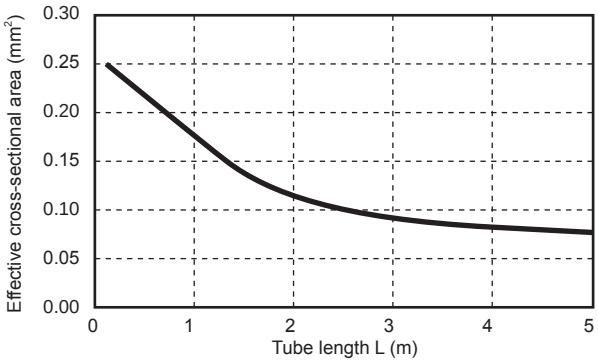

Dimensions

(Sales unit is 10 pcs./1 bag)

● Straight

[PTN2-M3-P80]

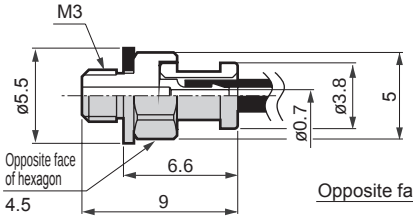

Weight/0.7 g

[PTN2-M5-P80]

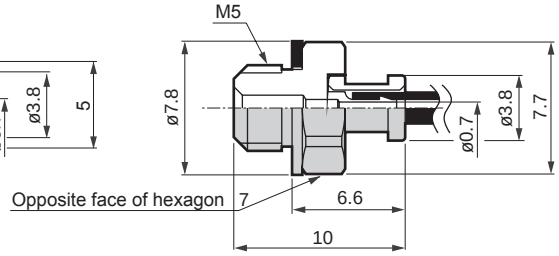

Weight/1.6 g

[PTN2-6-P80]

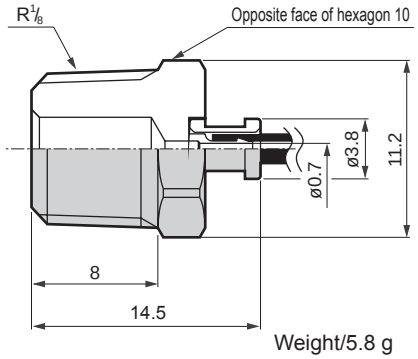

Weight/5.8 g

● Elbow

[PTNL2-M3-P80]

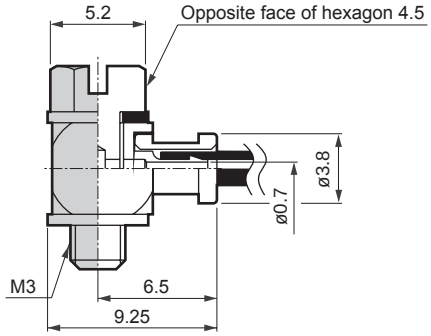

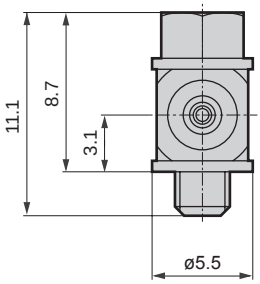

Weight/1.7 g

[PTNL2-M5-P80]

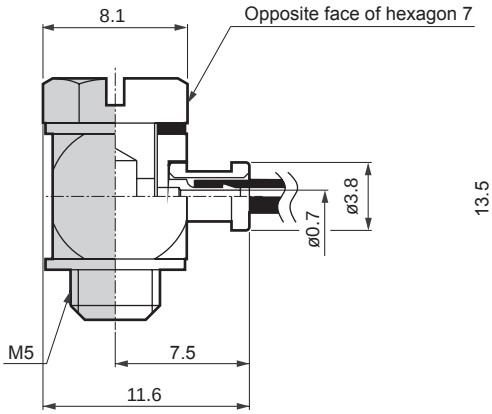

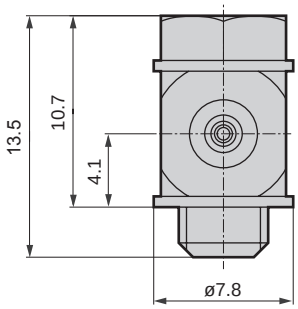

Weight/4.2 g

● Barbed nipple

[PTN24-0-P80]

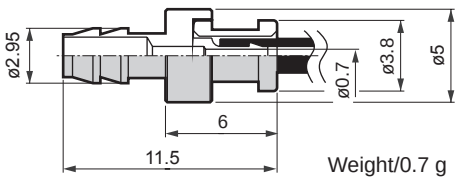

Weight/0.7 g

[PTN26-0-P80]

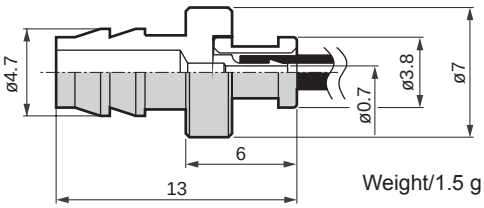

Weight/1.5 g

Series variation

Fiber tube clean (for push-in fitting)

Tube size ø1.8 × ø1.2

Push-in fitting for fiber tube

Port size M3, M5, R1/8, ø4

Fiber tube clean (for push-in fitting) EH

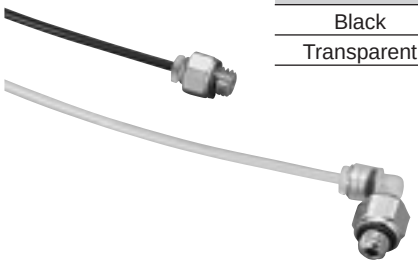

O.D. × I.D. (mm)
ø1.8 × ø1.2

Color
Black
Transparent

Push-in fitting for fiber tube (clean)

■ Straight

Single straight
CG-S2-□

Port size
M3
M5
R1/8

· page: 985

Straight
CG-S2-0

· page: 985

Bulk head
CG-S2-0-X

· page: 985

■ Elbow

Single elbow
CG-L2-□

Port size
M3
M5
R1/8

· page: 986

■ Tee

Both ports tee
CG-T2-□

Port size
M3
M5

· page: 986

Tee
CG-T2-0

· page: 986

● Sales unit for a clean type is 1 pcs./1 bag

Fiber tube (for push-in fitting)

● O.D.: ø1.8 × I.D.: ø1.2

RoHS

Specifications

Descriptions		Clean EH-5802
Working fluid		Compressed air
Working pressure (20°C) (*1)		-100 kPa to 1.0 MPa
Ambient temperature	°C	-10 to 60 (no freezing)
O.D. × I.D.	mm	ø1.8 × ø1.2
Inner diametral accuracy	mm	±0.1
Outer diametral accuracy	mm	±0.1
Durometer hardness		HDD 58
Min. bending radius (JIS B 8381)	mm	5
Min. installation radius	mm	7
Burst pressure (20°C)	MPa	3.8
Volume resistance ratio	Ω·cm	–
Material		Special polyolefin
Color		Black, transparent
Applicable fittings		CG Series (push-in) *2

*1: For the working pressure, refer to the figure of “Ambient temperature and pressure (use/burst)”.
***2: It cannot be used with a barbed fitting (PTN*).**

How to order

● Clean

EH-58 02 - 20 - C

- 02: Tube size ø1.8 × ø1.2 (O.D. × I.D.)
- 20: Length per roll 20 m
- C: Tube color

Tube color	
Blank	Black
C	Transparent

Characteristics graph

● Ambient temperature and pressure (use/burst)

EH-5802

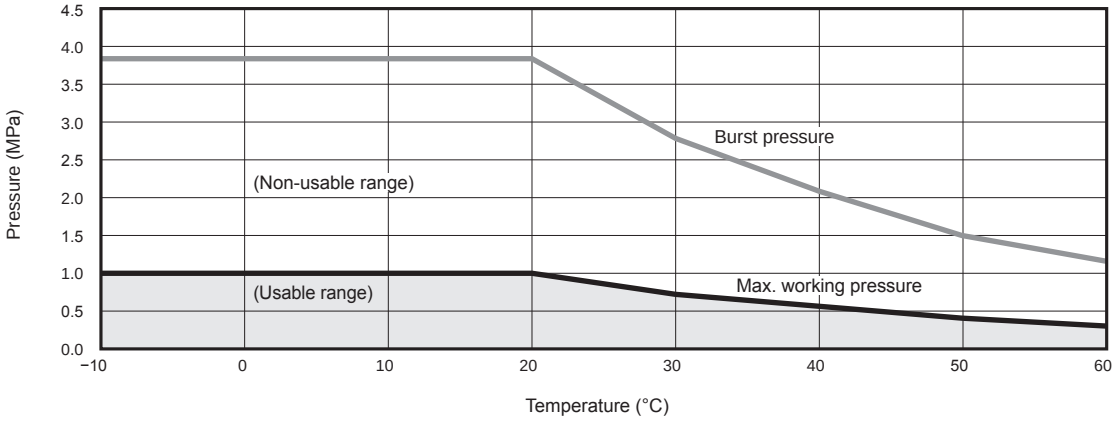

● Tube length and effective cross-sectional area

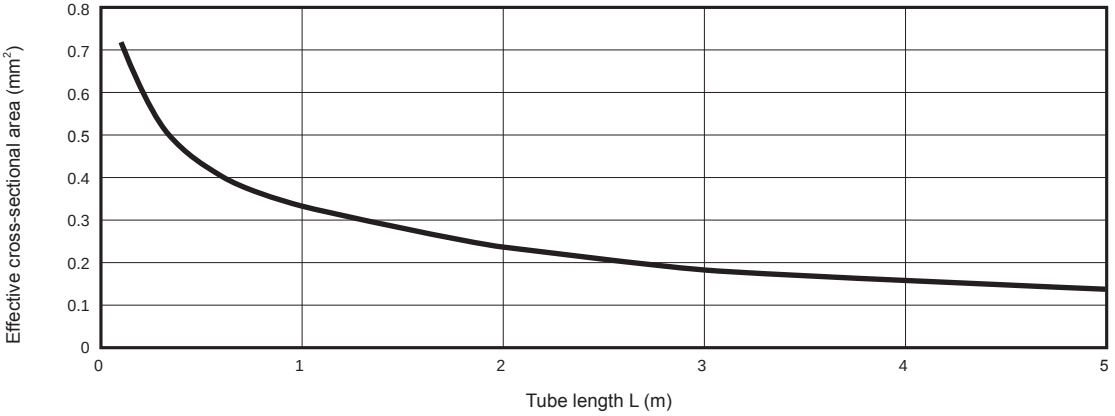

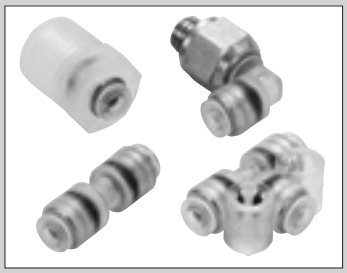

Push-in fitting for fiber tube

Clean CG Series

- Applicable tube outer diameter: ø1.8
- Port size: M3 to R1/8

RoHS CAD

Overview

CG Series fittings are designed for clean environment, such as semiconductor manufacturing, medical or food industry.
P.P. resin, stainless steel and EPDM rubber are used to improve corrosion resistance.
This product is assembled in accordance with oil-prohibited specifications and shipped in clean packaging.

Specifications

Model No.	CG Series
Working fluid	Clean air (*1)
Working pressure	-100 kPa to 1.0 MPa
Ambient temperature °C	-10 to 60 (no freezing)
Lubricant	Oil-prohibited
Applicable tube	Fiber tube (UP-9402-F1, EH-5802) *2

*1: Containing a rubber EPDM material, this product is not suitable for use with fluids containing a mineral oil.
***2: Using with a fiber tube for barbed fitting (UP-9102-F1) is not allowed.**
*3: It is sold by a piece.

How to order

* For combinations of model No., refer to the model No. described in dimensions (pages 985 to 986).

- Clean

CG - S 2 - 0 - X

- A Shape
- B Applicable tube outer diameter ø1.8
- C Port size
- D Other combination

A Shape	
S	Straight
L	Elbow
T	Tee

Note: It is sold by a piece.

C Port size	
M3	M3 × 0.5
M5	M5 × 0.8
6	R1/8
0	No thread

D Other combination	
X	Bulk head

Dimensions: Single straight, Straight, Bulk head

[Sales unit is 1 pcs./1 bag]

Single straight

● CG-S2- □

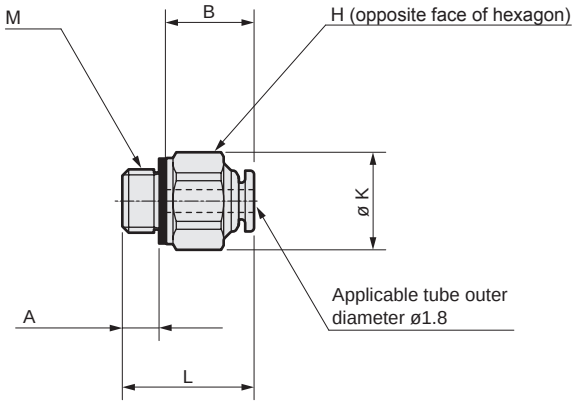

● CG-S2-6

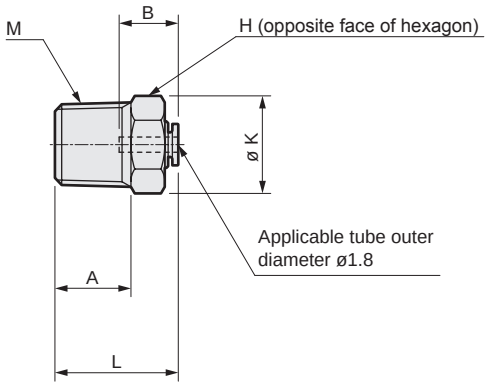

Model No.	M	H	K	L	A	B	Min. bore size	Effective cross-sectional area mm²	Weight g
CG-S2-M3	M3 × 0.5	5.5	6	10.7	2.7	7	1.5	0.92	0.8
CG-S2-M5	M5 × 0.8	7	7.7	10.4	3.2	7	1.5	0.92	1.2
CG-S2-6	R1/8	10	11.6	14.6	9	7	1.5	0.97	1.1

Straight

● CG-S2-0

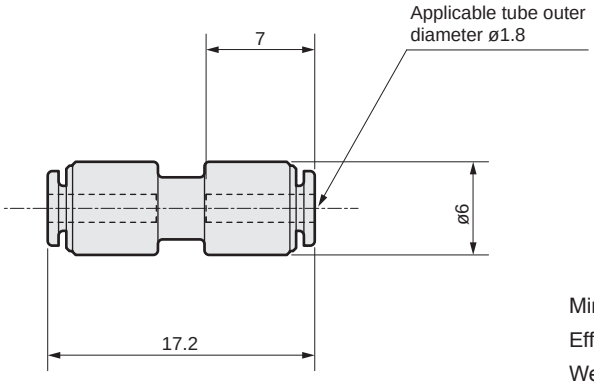

Min. bore size: ø1.5
Effective cross-sectional area: 0.82 mm²
Weight: 0.5 g

Bulk head

● CG-S2-0-X

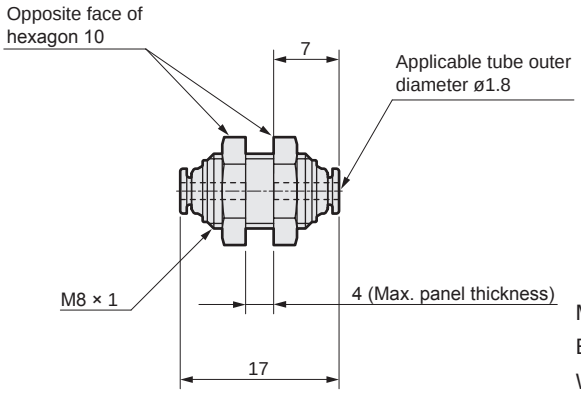

Min. bore size: ø1.5
Effective cross-sectional area: 0.85 mm²
Weight: 5.8 g

Dimensions: Single elbow, Both ports tee, Tee

[Sales unit is 1 pcs./1 bag]

Single elbow

● CG-L2 □

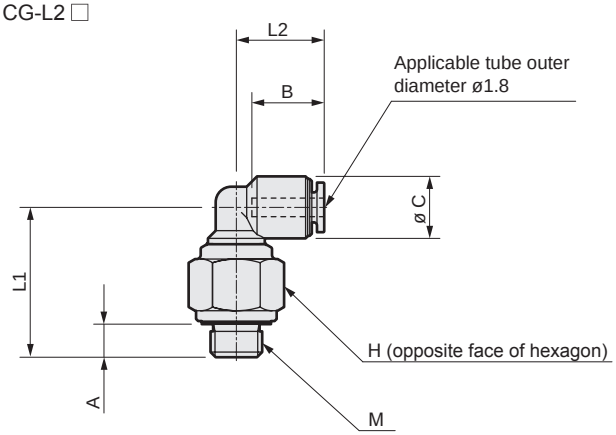

● CG-L2-6

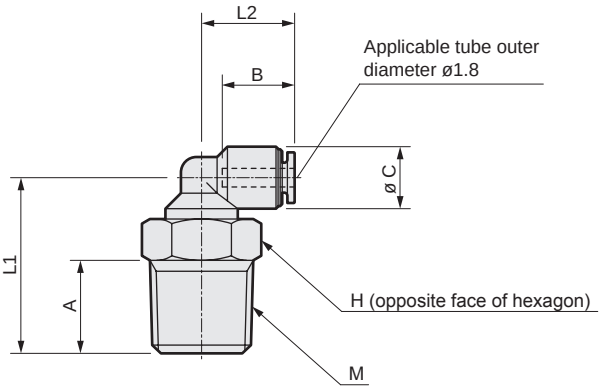

Model No.	M	H	L1	L2	A	B	C	Min. bore size	Effective cross-sectional area mm²	Weight g
CG-L2-M3	M3 × 0.5	8	14	8.5	2.7	7	6	1.5	0.81	2.7
CG-L2-M5	M5 × 0.8	8	14.5	8.5	3.2	7	6	1.5	0.81	3.1
CG-L2-6	R1/8	10	17	9	9	7	6	1.5	0.84	1.2

Both ports tee

● CG-T2- □

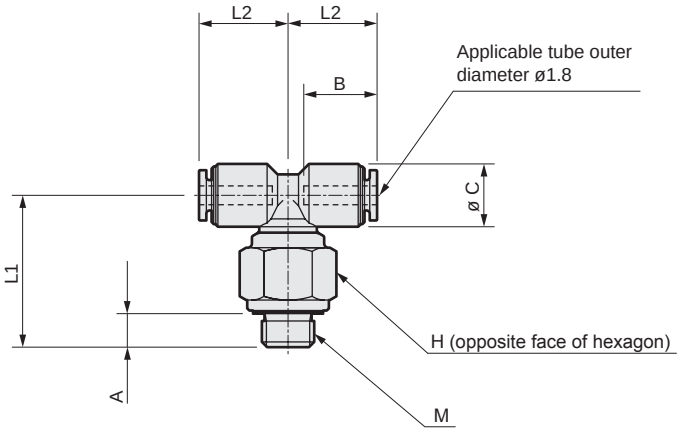

Model No.	M	H	L1	L2	A	B	C	Min. bore size	Effective cross-sectional area mm²	Weight g
CG-T2-M3	M3 × 0.5	8	14	8.5	2.7	7	6	1.5	0.96	2.8
CG-T2-M5	M5 × 0.8	8	14.5	8.5	3.2	7	6	1.5	1.25	3.7

Tee

● CG-T2-0

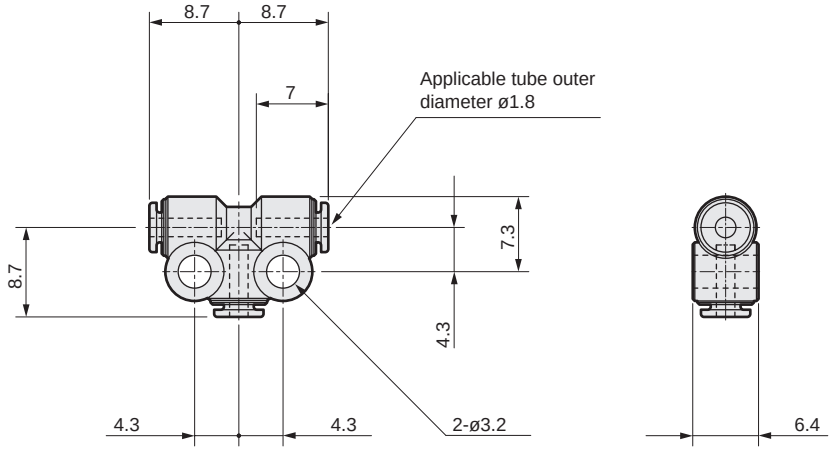

Min. bore size: ø1.5
Effective cross-sectional area: 0.90 mm²
Weight: 1.1 g

Safety precautions

Design & selection

- This is an extremely fine tube, so the effective cross-sectional area is extremely small. With a standard cylinder may cause problems such as failure to obtain set speed, delayed response, or knocking.
  The pipe length should be 1 m or less and combination with fine speed cylinder (catalog No. CC-N-360A) is recommended.
- Because the fiber tube is thin, the vacuum in the vacuum device increases and delays the response of the vacuum switch during vacuum burst when used with an ejector.

Mounting / Installation / Adjustment (piping)

- Use proper torque to tighten the pipes when connecting them.
  Using an appropriate torque can prevent air leakage and screw damage. First tighten the screw by hand and then use a tool so that threads are not damaged.
  Check that the tool's hexagon face and wrench are the correct size.
  (Reference value)

Port size	Tightening torque N·m
M3	0.3 to 0.5
M5	1 to 1.5
R 1/8	3 to 5

* The M3 screw could be damaged by excessive tightening torque.

- On devices requiring an antistatic measure, ground the part to which the fitting is connected.
  Electrostatic discharge could build up in tubing if the part is not grounded.
- The elbow can be installed while being rotated in any direction, but cannot be rotated after assembly.
- R 1/8 does not have sealing material. Prepare sealing tape, etc., separately.

During use & maintenance

- Mounting and removal

Installation

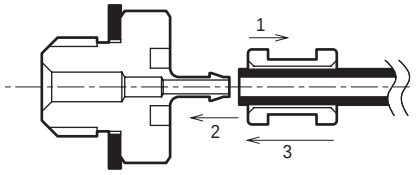

[Fig. 1]

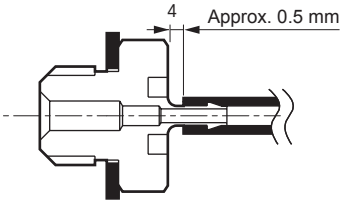

[Fig. 2]

Removal

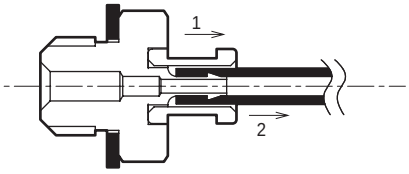

(1) Insert the collar into the tube. (Fig. 1)
(2) Insert the tube to position 4. (Fig. 2)
(3) Insert the collar into the fitting. (Fig. 1)
(4) Check that the tube is not dislocated from the fitting.
Note: Do not tilt the tube when inserting it into the far end of the fitting. The barbed fitting is thin, and could be damaged by a lateral load.

(1) Pull the collar out with a pair of needle-nose pliers, etc.
(2) Pull out the tube.
(3) When reusing the tube, cut the end at 10 mm and over.
Note: If the tube is pulled forcefully while the collar is attached, the tube could be deformed, the flow obstructed, or the tube dislocated during use.

- Precautions after mounting

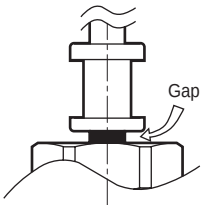

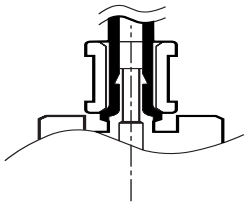

(1) Check that there is no gap between the collar and fitting.
(The fitting could break or the tube could be dislocated.)

(2) If the collar does not go in, the tube may ride up on it as shown above. Follow mounting and removal procedures and assemble the collar at a position of 0.5 mm from the tube.

Antistatic tube

● O.D.: 3.2 mm/4 mm/6 mm/8 mm/10 mm/12 mm

RoHS

Features

● Antistatic and dust-proof tube

● Variety of colors
Tubing is available in black, white, transparent, transparent blue, or transparent green.
Choose the color suitable for a purpose.

● Standard clean room specifications (F2 Series)

● Diverse line-up
Six diameters are available: ø3.2, 4, 6, 8, 10, and 12.

UP-F2 Series (ø3.2 to ø6)

Specifications

Descriptions	UP-91**-F2-P80		
O.D. × I.D. mm × mm	ø3.2 × ø1.8 (Note)	ø4 × ø2.5	ø6 × ø4
Working fluid	Compressed air		
Max. working pressure MPa	0.7 (20°C)		
Ambient temperature °C	0 to 60 (no freezing)		
Durometer hardness (JIS K 7215)	HDA94 (reference)		
Min. bending radius (JIS B 8381) mm	4	6	12
Min. installation radius mm	8	11	18
Burst pressure MPa	2.1 (20°C)		
Volume resistance ratio (JIS K 6911) Ω·cm	Black: 10^4 to 10^5, other colors: 10^{10} to 10^{11} (reference value)		
Material	Antistatic urethane		
Color	Black, white, transparent, transparent blue, transparent green, transparent red (Note)		

Ambient temperature and pressure (use/burst)

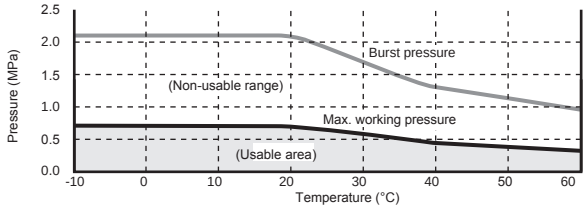

How to order

UP - 91 32 - 20 - W - F2 - P80

- 91: Ⓐ Tube hardness
- 32: Ⓑ Tube size
- 20: Ⓒ Length per roll
- W: Ⓓ Tube color
- F2: Antistatic
- P80: Clean room specifications

Code	Content
Ⓐ Tube hardness	
91	94°
Ⓑ Tube size	
32	ø3.2 (Note)
04	ø4
06	ø6
Ⓒ Length per roll	
20	20 m
Ⓓ Tube color	
Blank	Black
W	White
C	Transparent
CB	Transparent blue
CG	Transparent green
CR	Transparent red (Note)

Note: All outer diameter ø3.2 tubes and the transparent red ø4 and ø6 tubes are available as custom orders.

UP-F1 Series (ø8 to ø12)

Specifications

Descriptions	UP-92**-F1		
O.D. × I.D. mm × mm	ø8 × ø5	ø10 × ø6.5	ø12 × ø8
Working fluid	Compressed air		
Max. working pressure MPa	0.7 (20°C)		
Ambient temperature °C	0 to 60 (no freezing)		
Durometer hardness (JIS K 7215)	HDA92 (reference)		
Min. bending radius (JIS B 8381) mm	10	13	16.5
Min. installation radius mm	25	30	36
Burst pressure MPa	2.1 (20°C)		
Volume resistance ratio (JIS K 6911) Ω·cm	Black: 10^4 to 10^8, other colors: 10^8 to 10^{12} (reference value)		
Material	Antistatic urethane		
Color	Black, white, transparent, transparent blue, transparent green		

Ambient temperature and pressure (use/burst)

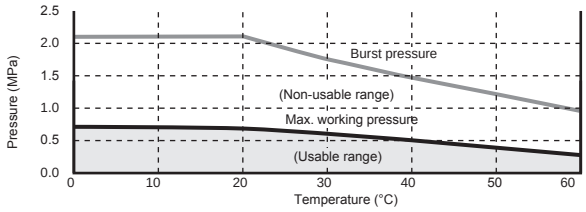

How to order

UP - 92 08 - 20 - W - F1 - P80

- 92: Ⓐ Tube hardness
- 08: Ⓑ Tube size
- 20: Ⓒ Length per roll
- W: Ⓓ Tube color
- F1: Antistatic
- P80: Clean room specifications

Code	Content
Ⓐ Tube hardness	
92	92°
Ⓑ Tube size	
08	ø8
10	ø10
12	ø12
Ⓒ Length per roll	
20	20 m
Ⓓ Tube color	
Blank	Black
W	White
C	Transparent
CB	Transparent blue
CG	Transparent green

● Insert ring

INS - UP 32 - 1 - P80

Ⓐ Ⓑ

Ⓐ Applicable tube	
32	UP-9132
04	UP-9104
06	UP-9106

Ⓑ Clean room specifications	
P80	Oil-prohibited

Sales unit is 10 pcs./1 bag.

Dimensions

● Dedicated fitting/speed control valve
Refer to the dimensions of GW Series fitting (pages 958 to 967) and SC3W Series speed control valve (page 912).

● Insert ring (custom order product)

・INS-UP32-1-P80

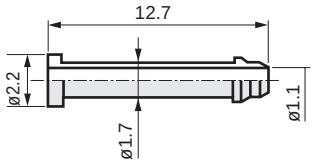

・INS-UP04-1-P80

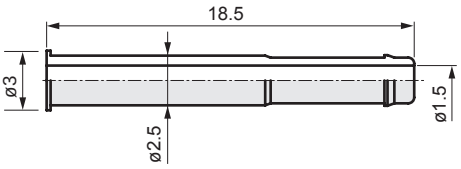

・INS-UP06-1-P80

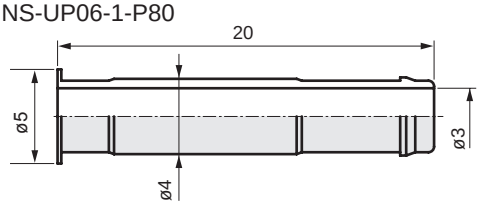

Material: Brass + electroless nickeling

SCPD3
SCM
SSD2
MDC2
SMG
LCM
LCR
LCG
LCX
STM
STG
STR2
MRL2
GRC
Cylinder switch
MN3E MN4E
4GA/B
M4GA/B
MN4GA/B
F.R (module unit)
Clean F.R
Precision R
Press gauge Diff. press gauge
Electro-pneumatic R
Speed controller
Auxiliary valve
Fitting/ tube
Clean air unit
Pressure sensor
Flow rate sensor
Valve for air blow
Ending

Safety precautions

CAUTION

Design & selection

- Be sure to ground the part connected to the fitting. Electrostatic discharge could build up in tubing if the part is not grounded.
- When using tubing where electrostatic discharge must be prevented, select "black" tubing.
- Use the same size of tube and push-in fitting.
- When using with vacuum pressure with a push-in fitting, use the insert ring.
- Use CKD's fittings and tubes.
- Do not apply a pulling force exceeding the values given on the right onto the fitting or tube.

(N)

Tube outer diameter	Pulling force
ø3.2	30
ø4	30
ø6	55
ø8	110
ø10	150
ø12	180

Installation & adjustment

- The insert ring can be pulled out of urethane tube with fingers when changing or modifying piping connection. The insert ring needs not be discarded.

During use & maintenance

- Insert the insert ring by hand. It could deform or break and cause vacuum leakage if inserted with a tool.
- Mounting method

1. Insert the insert ring into the urethane tube with fingers.

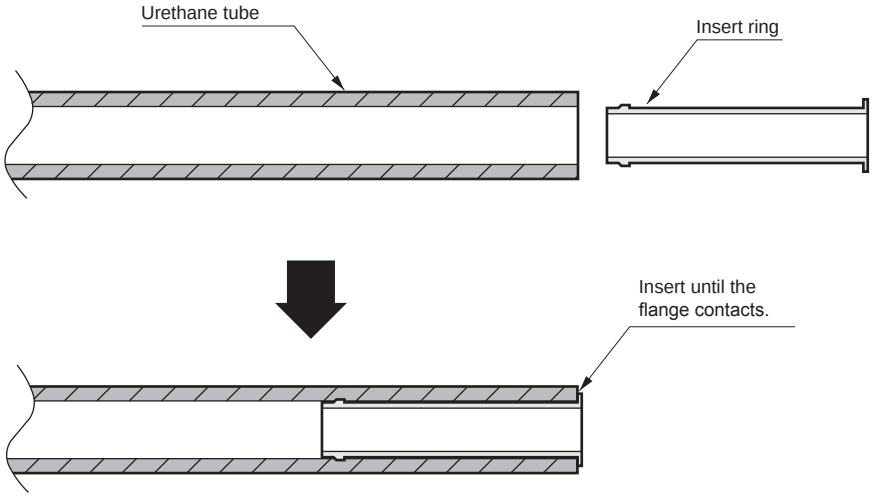

2. Insert into the push-in fitting (GW Series).

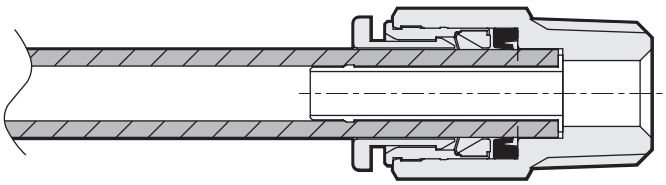

Urethane tube

RoHS

New manufacturing technology has enabled the larger bore size and improved strength without increasing the outer diameter. This piping tube is also used for larger flow rate. Effective for cost reduction.

Common specifications

Descriptions	
Working fluid	Air
Ambient temperature °C	0 to 60
Burst pressure MPa	4 (at 20°C)
Max. working pressure MPa	1.0 (at 20°C)
Operating vacuum pressure kPa	-100

Specifications

Descriptions	NU-04	NU-06	NU-08	NU-10	NU-12
O.D. × I.D. mm × mm	4 × 2.5	6 × 4.5	8 × 6	10 × 7.5	12 × 9
Burst pressure MPa	4 to 2.4				
Ambient temperature °C	0 to 60 (no freezing)				
Durometer hardness (JIS K7215)	HDD 64				
Min. bending radius (JIS B 8381) mm	8	16	24	30	36
Min. installation radius mm	12	26	36	42	52
Outer diametral accuracy mm	+0.1 -0.1			+0.1 -0.15	
Weight g/m	10	15	28	42	62
Tube color	Black/white				
Length per roll m	20				

How to order

NU - 04 - 20 - W - P80

(A) (B) (C) (D)

(A) Tube size (O.D.)		(B) Length per roll		(C) Tube color		(D) Clean room specifications	
04	ø4	20	20 m	Blank	Black (standard)		Treatment
06	ø6			w	White (standard)	P80	Oil-prohibited
08	ø8						
10	ø10						
12	ø12						

Ambient temperature and pressure (use/burst)

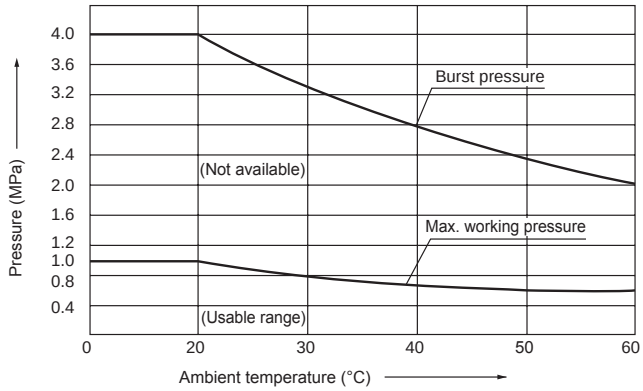

Safety Precautions

Always read this section before use.

Design & selection

WARNING

■ Use the product within specifications.
Using this product with fluid other than compressed air or at a pressure or temperature exceeding the specifications could result in rupture, the tube coming off, or leakage.

■ Avoid installing this product outdoors or where it is exposed to direct sunlight.

■ Do not use the normal fitting if electrostatic discharge could build up. Otherwise system faults or failure could occur. An antistatic fitting and antistatic tubing should be used in such a case.

■ Do not constantly push down or apply a load onto the push-ring of the push-in fitting.
- The tube may lose its ability to hold.
- When transporting an assembled product, avoid positions in which the push ring is constantly pressed down.

CAUTION

■ Confirm that the product withstands the working environment.
- This product cannot be used in environments where functional obstacles could occur.
Such environments include high temperature, chemical atmosphere, or where chemical, vibration, moisture, water drip or gas is present. Environment where ozone is generated. Outdoors or where the product could be subject to direct sunlight; or where cutting oil, coolant, or spatter could occur or where static electricity could pose a problem.

■ Contact CKD if ozone could occur in supplied air. (Ozone proof products are available.)

■ Avoid using this product in hot or humid places, or where it could be subject to direct sunlight. Install this product where the temperature is 40˚C or less.

■ Flame-resistant resin (equivalent to UL94 Standard V-O) is provided for GW Series' push ring, but not for GWJ Series.
Check specifications when selecting the product.

Mounting / Installation / Adjustment

WARNING

■ Securely insert the tube until it contacts the fittings tube end, and check that it does not come off the fitting.

■ Stop air flow and confirm that there is no residual pressure before replacing the tube.

Piping

CAUTION

■ Observe the following precautions when using nylon tubes or urethane tubes for piping material.
- Use the designated tube and CKD's plastic plug (GWP Series). Do not use metal plugs as they may cause problems.
Tube outer diameter precision
  · Polyamide tube ·····Within ±0.1 mm
  · Polyurethane tube (to ø6) ·····Within ±0.1 mm
  (ø8 to) ·····Within $^{+0.1}_{-0.15}$ mm
Use a tube with hardness of 92˚ and over. If a tube that does not satisfy diameter accuracy or hardness is used, chucking force may drop or the tube may come off or be difficult to insert.
Contact CKD when using a non-designated tube or plug.
- Use a flame resistant tube or metal pipe where spatter could occur.
- When using the standard push-in fitting on the spiral tube, fix the base of the tube with a hose band. Otherwise rotation occurs, causing a reduction in holding force.
- Cut the tube at a right angle with a dedicated cutter.
- Prevent the tube from being worn or damaged during use. Otherwise the tube may break or rupture.
- Do not reuse a tube as it could be deteriorated and deformed once used.
- Do not let the tube directly contact other surfaces, it could wear and break.

■ Do not use this product for applications that constantly rotate, oscillate or which have a tube that moves vigorously.
- The elbow can be mounted by turning it, but must not be used for constant rotating or oscillating applications. Fittings could be damaged.
- Provide sufficient allowance in the tube so that it does not bent sharply.

■ Observe the min. installation radius and do not bend the tube sharply.

- Consider changes in tubing length caused by pressure when connecting tubing, and provide sufficient length of the tubing min. installation radius or over.
- Measuring method
  (1) Min. bending radius (JIS B 8381)
  The values are based on JIS B 8381.
  If tube is tightly wound around a bar, indicate the bar radius when deformation ratio η reaches 25%.

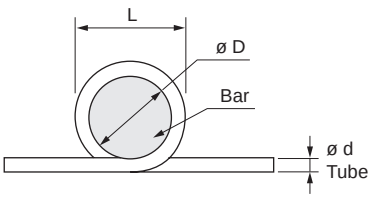

$$\eta = \left(1 - \frac{L-D}{2d}\right) \times 100$$

η: Deformation ratio (%)
d: Tube outer diameter (mm)
L: Measuring volume (mm)
D: Bar diameter (mm)
(2 times of min. bending radius)

(2) Min. installation radius
To measure, simply bend the tube and confirm the radius when tube diameter deformation is 10%.

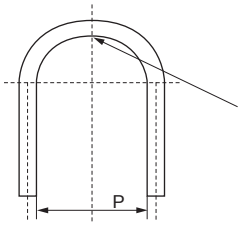

Shall be the min. mounting pitch P when the deformation rate is 10%.
Min. installation radius = P/2

■ Always flush just before piping pneumatic component.

- Any foreign matter that has entered during piping must be removed so it does not enter the pneumatic component. Remove all swarf and foreign matter generated during piping and tube insertion before use.

■ When supplying compressed air for the first time after connecting pipes, do not apply high pressure suddenly.

- Piping connection could be dislocated or the piping tube jump about leading to accidents.

■ After connecting pipes, check pipe connections for air leaks before supplying compressed air.

- Apply a leakage detection agent on pipe connections with a brush, and check for air leaks.

■ Use proper torque to tighten the pipes when connecting them.

- Using an appropriate torque can prevent air leakage and screw damage. First tighten the screw by hand to prevent threads from being damaged, then use a tool. Check that the tool's hexagon face and wrench are the correct size.

(Reference value)

Port thread	Tightening torque N·m
M3	0.3 to 0.6
M5	1.0 to 1.5
Rc1/8	3 to 5
Rc1/4	6 to 8
Rc3/8	13 to 15
Rc1/2	16 to 18

* The above values apply when the matching screw is a JISB0203 tapered female thread for piping (material: C3604BD).

■ Connect piping so that connections are not dislocated by system movement, vibration, or tension, etc.

- Control of actuator speed will be disabled if piping on the exhaust face of the pneumatic circuit is disengaged.
- When using the chuck holding mechanism, the chuck will be released creating a hazardous state.
- Confirm that the tube has been inserted properly, and make sure that there is no tension during use.
  The tube could be dislocated or damaged if there is any tension.

■ Make sure that the fitting and tube are not twisted or pulled, and that moment load is not applied.

■ Do not tighten while pressure is applied.

■ Observe the following precautions when using nylon tubes or urethane tubes for piping material.

- Use a flame resistant tube or metal pipe where spatter could occur.
- Use a hydraulic hose for common piping of hydraulic and pneumatic specifications.
- When using for hot liquids, use a spigot fitting. The push-in fitting cannot be used.

■ Make sure that the tube is not worn or damaged.

- Tubing could be crushed, break, or be dislocated.

■ Use the designated tube.

■ Securely insert the tube to the tube end, and make sure that the tube cannot be pulled off.

■ Cut the tube with a dedicated cutter, and cut at a right angle.

■ If the port thread is M3 or M5, the chamfered O. D. of the female thread side must be within the following values.

Port thread	Chamfered outer diameter (mm)
M3	ø3.3 to 3.9
M5	ø5.4 to 5.8

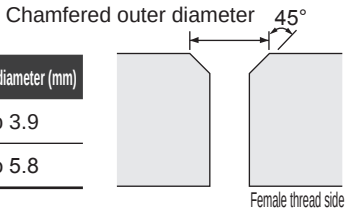

■ The effective cross-sectional area of the turn elbow (GWL □ - □ -T, GWL □ - □ -2T) varies based on the direction.

During use & maintenance

⚠ CAUTION

Mounting and removal

Installation

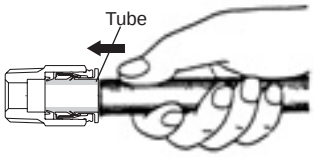

Push the tube in until it contacts the tube end. Check that the tube does not come off the fitting. Tube goes in approx. 15 to 21 mm into the end of the fitting body. The end of the mounted tube must be cut at a right angle.

Removal

While pushing the push ring with a finger, pull the tube to remove it.

MEMO

MEMO

Air unit components

	Page
Clean air unit **CAU30** Series	999

Clean air unit

CAU30

Air unit components

Overview

Compact and completely oil-prohibited clean air supply unit without piping work.

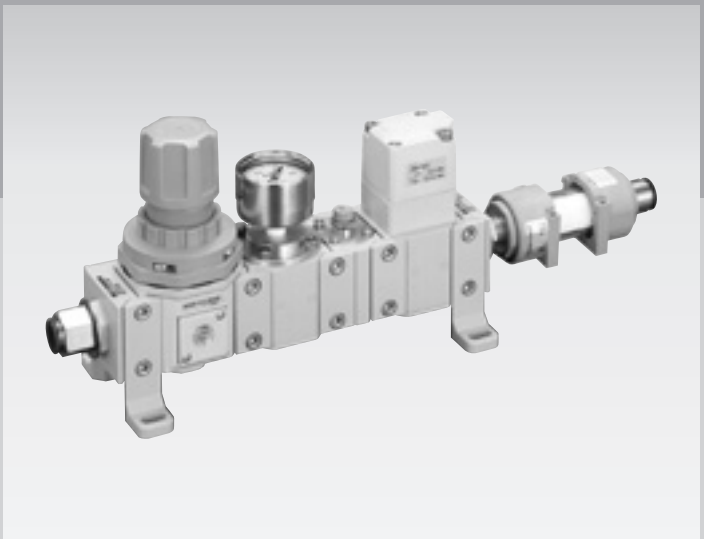

CONTENTS

Product introduction	1000
● **CAU30**	**1002**
⚠ Safety precautions	1009

Clean blow system all with one unit

High rigidity aluminum body with transparent filter

Piping-free unit

Just insert tubes for piping.
The clean air unit significantly saves the assembling work and its compact body saves space.
Simplified model number management for ordering.

All oil-prohibited specifications

Fluid passage parts are all degreased and cleaned, and manufactured in a dust-free room from assembling to packaging.

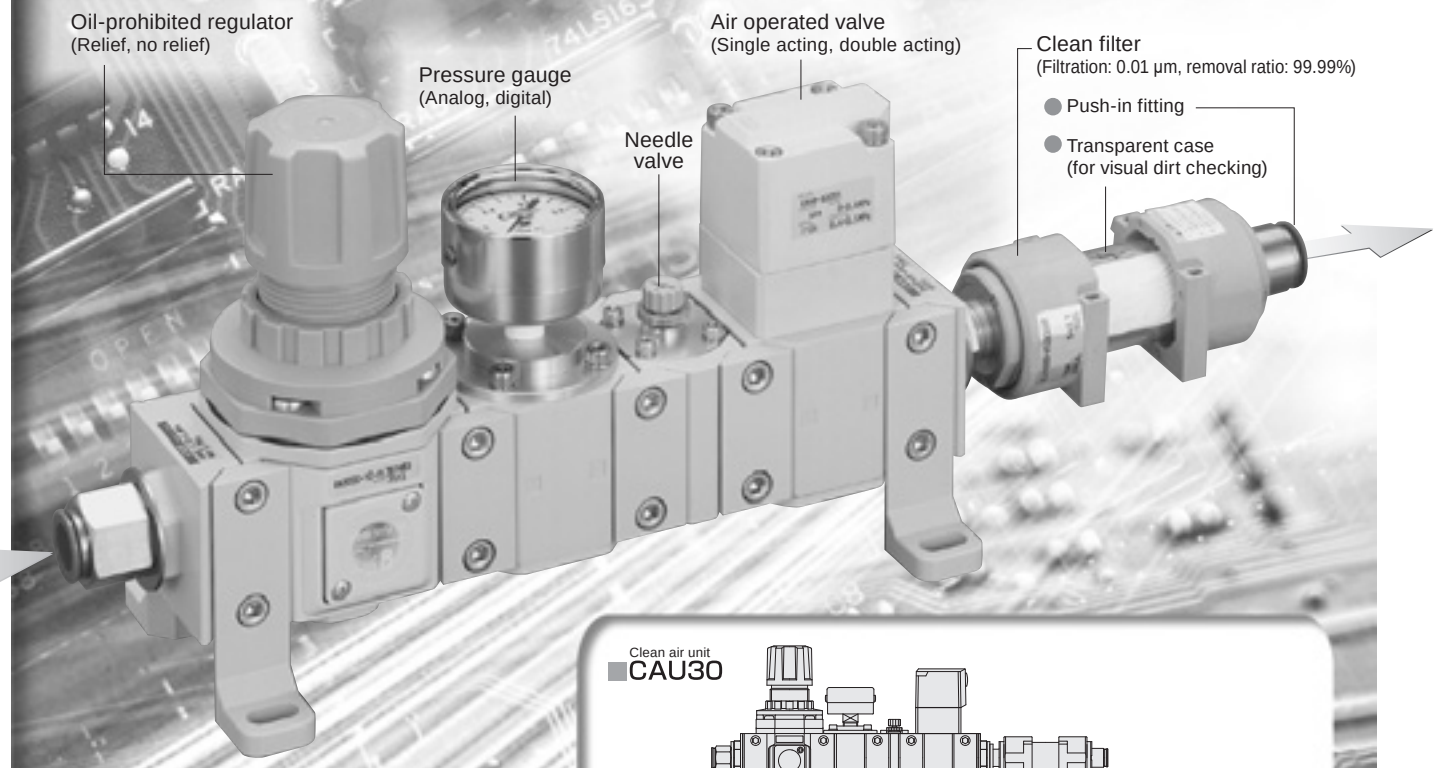

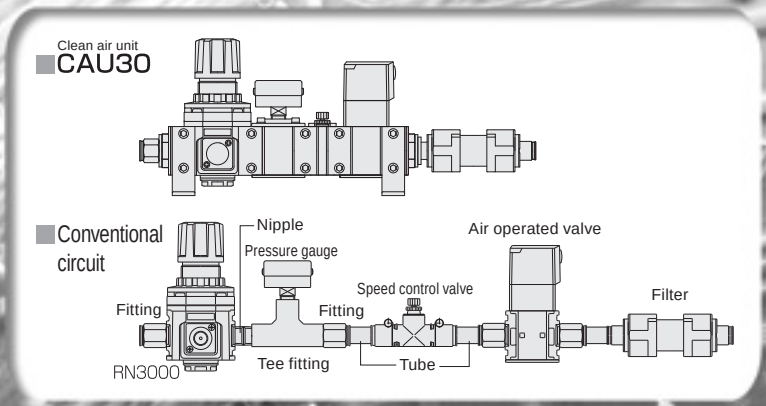

Clean air unit

CAU30 Series

Compact and clean air supply unit with all-oil-prohibited specification requiring little piping work.

High rigidity aluminum body

The body made of aluminum has high rigidity (except for the filter).

Two-flow available

Wider variation of air supply.

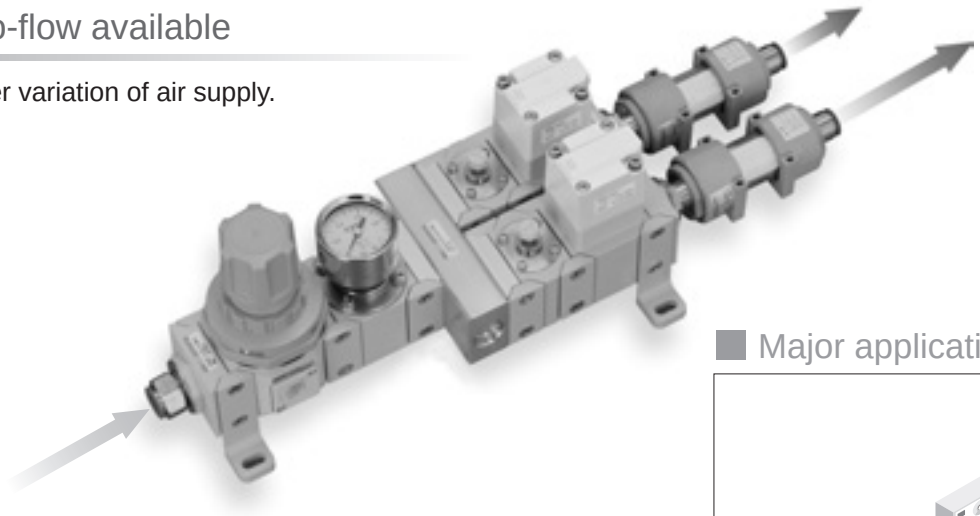

High air flow rate

Provides high stable flow of 400 ℓ/min (ANR).

Modular allowing flexible combination

Can be combined with various instruments for different uses.
This unit can be connected with air operated valves and needle valves, which was not possible before.

Best suited to the liquid crystal display industry

This unit has been developed mainly for ionizers.
It can also be used for automobile parts, foods, and medicine.

High precision filtration of 0.01 μm

A hollow fiber membrane element is used as a filter.
Particle filtration of 0.01 μm and removal ratio of 99.99% are ensured.

Visual dirt checking

The filter with its transparent case allows visual checking of dirt, making the maintenance work easy.

Complied with RoHS directive

All substances that can adversely affect the environment, including lead and hexavalent chrome, have been eliminated.

RoHS

Major applications

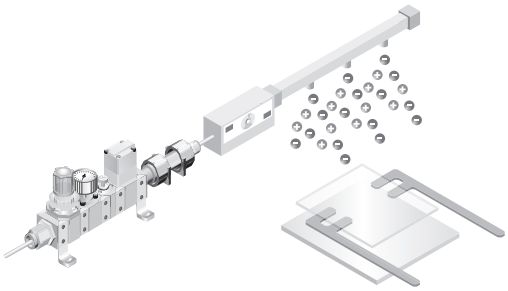

● Air supply to ionizer

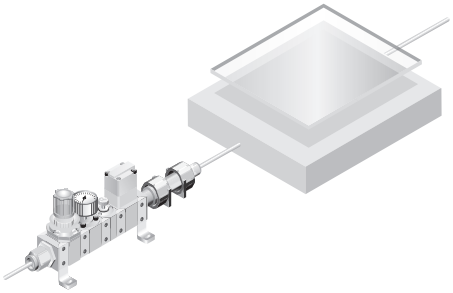

● Air supply for hovering conveyance

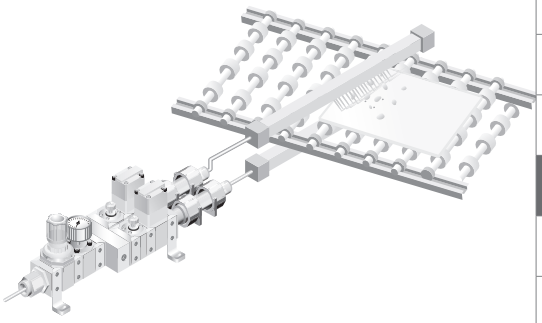

● Air knife

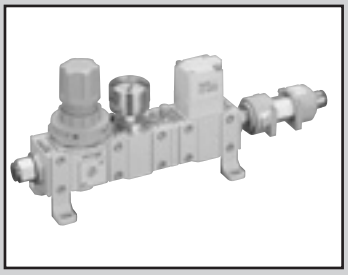

Clean air unit

CAU30 Series

● Port size: ø10/ø12

RoHS CAD

Common specifications

Descriptions		Clean air unit
Working fluid		Compressed clean air
Max. working pressure	MPa	0.7 (0.5 for low pressure)
Proof pressure	MPa	1.0
Ambient temperature/fluid temperature	°C	5 to 45
Set pressure	MPa	0.05 to 0.6 (0.05 to 0.3 for low pressure)
Port size (IN/OUT)		ø10, ø12
Filtration rating	μm	0.01 (removal efficiency 99.99%)
Processing flow rate	ℓ/min	400 *1
Differential pressure proof *2	MPa	0.5
Dial rotations (needle position)		12 and over
Pilot air pressure for valve	MPa	0.4 to 0.5
Pilot port size for valve		Rc1/8
Oil-prohibited specifications		Oil-prohibited flow passage

*1: Flow rate at 0.7 MPa primary pressure, 0.5 MPa set pressure and 0.15 MPa pressure drop. Refer to the flow characteristics table for details.
*2: Pressure difference between before and after the filter.

Pressure sensor specifications (Digital pressure sensor: PPX-R10N-6M-P12)

Descriptions		Digital pressure sensor
Power supply voltage		12 to 24 VDC ±10% Ripple P-P 10% or less
Power consumption		Normal operation: 720 mW or less (at a power supply voltage of 24 V, with a current consumption of 30 mA or less) ECO MODE: 480 mW or less at STD (at a power supply voltage of 24 V, with a current consumption of 20 mA or less), 360 mW or less at FULL (at a power supply voltage of 24 V, with a current consumption of 15 mA or less)
Comparative output (Comparative output 1, comparative output 2)		NPN transistor, Open collector ·Max. inflow current: 100 mA ·Applied voltage: 30 VDC or less (between comparative output and 0 V) ·Residual voltage: 2 V or less (at an inflow current of 100 mA)
	Output operation	Selecting NO/NC by key stroke
	Output mode	EASY mode/Hysteresis mode/Window comparator mode
	Differential (hysteresis)	Min. 1 digit (variable)
	Repeatability	±0.2% F.S. (Within ±2 digits)
	Response time	Select from 2.5 ms, 5 ms, 10 ms, 25 ms, 50 ms, 100 ms, 250 ms, 500 ms, 1000 ms, and 5000 ms by key stroke
	Short-circuit protection	Installed
Display		4 digits + 4 digits 3-color LCD display (refresh cycle: select from 250 ms, 500 ms, and 1000 ms by key stroke)
Temperature characteristics (Set +20°C as reference.)		In a range of ±1% F.S.
Lead wire		2 m Cable with connector

Weight

● 1 system (Unit: g)

Model No.	Weight
CAU30-*-R*F (regulator, filter)	800

● 2 systems (Unit: g)

Model No.	Weight
CAU30-*-2-R*F (regulator, filter)	1490

Additional weight (Unit: g)

Option (including joiner)		Weight
Pressure gauge	T6: With pressure outlet port block	265
	GY49: Analog pressure gauge	345
	PX1: Digital pressure sensor	350
Needle	N1: Needle block	165
Air operated valve	V1: Air operated valve block (single acting)	390
	V3: Air operated valve block (double acting)	390

Additional weight (Unit: g)

Option (including joiner)		Weight
Pressure gauge	T6: With pressure outlet port block	265
	GY49: Analog pressure gauge	345
	PX1: Digital pressure sensor	350
Needle	N1: Needle block	330
Air operated valve	V1: Air operated valve block (single acting)	780
	V3: Air operated valve block (double acting)	780

How to order

CAU30 - H10 - 2 - R1 T6N1V1 F - X1

- CAU30: Model No.
- H10: Ⓐ Port size
- 2: Ⓑ System
- R1: Ⓒ Regulator
- T6N1V1: Ⓓ Assembly option
- F: Filter
- X1: Ⓔ Pressure gauge orientation

Code	Content
Ⓐ Port size	
H10	ø10
H12	ø12
Ⓑ System	
Blank	1 system
2	2 systems
Ⓒ Regulator	***1**
R1	Setting 0.05 to 0.6 MPa Pressure relief
R2	Setting 0.05 to 0.6 MPa Nonrelief
RL1	Setting 0.05 to 0.3 MPa (for low pressure) Pressure relief
RL2	Setting 0.05 to 0.3 MPa (for low pressure) Nonrelief

Ⓓ Assembly option *2

Pressure gauge	Blank		Without pressure gauge block
	T6	*3	With pressure outlet port block (Pressure outlet port is assembled while air is flowing.)
	GY49	*4	With analog pressure gauge attached (G49D-6-*-P94)
	PX1	*5	Digital pressure sensor assembled (PPX-R10N-6M-P12)
Needle	Blank		Without needle block
	N1		With needle block
Air operated valve	Blank		Without air operated valve block
	V1		Single acting (normally closed)
	V3		Double acting

Ⓔ Pressure gauge orientation *6

Blank	Standard 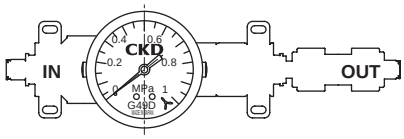
X1	90° clockwise 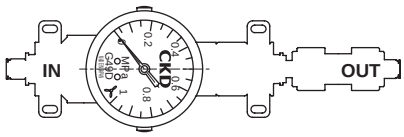
X2	180° clockwise 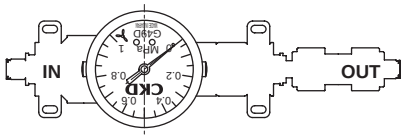
X3	270° clockwise 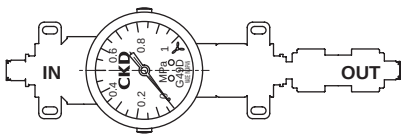

⚠ Precautions for model No. selection

*1
Pressure range of pressure gauge (MPa)

	RL1 or RL2	R1 or R2
G49D	0 to 0.4	0 to 0.7
PPX	-0.100 to 1.000	

*2: Select pressure gauge, needle and air operated valve options.
*3: If "T6" option is selected, only a pressure outlet port block is attached. The pressure outlet port size is Rc1/8.
*4: If "GY49" pressure gauge is selected together with "RL1" or "RL2" regulator, the pressure gauge will be for low pressure (0 to 0.4 MPa pressure range).
(It will be for standard pressure of -0.100 to 1.000 MPa pressure range in case of "PX1" pressure gauge.)
*5: Output of the digital pressure sensor assembled (PPX) is NPN transistor 2 output points (custom order).
*6: The figure of pressure gauge orientation uses a "GY49" pressure gauge as an example. The same orientation applies to "PX1".

[Example 1 of model No.]

CAU30-H10-R1GY49N1V1F

- Ⓐ Port size : ø10
- Ⓑ System : 1 system
- Ⓒ Regulator : 0.05 to 0.6 MPa Pressure relief
- Ⓓ Assembly option : Analog pressure gauge (G49D), needle, air operated valve (single acting) assembly
- Ⓔ Pressure gauge orientation : Standard

[Example 2 of model No.]

CAU30-2-H12-RL1PX1V3F-X2

- Ⓐ Port size : ø12
- Ⓑ System : 2 systems
- Ⓒ Regulator : 0.05 to 0.3 MPa Pressure relief
- Ⓓ Assembly option : Digital pressure sensor (PPX), air operated valve (double acting) assembly
- Ⓔ Pressure gauge orientation : 180° clockwise

Internal structure and flow path materials

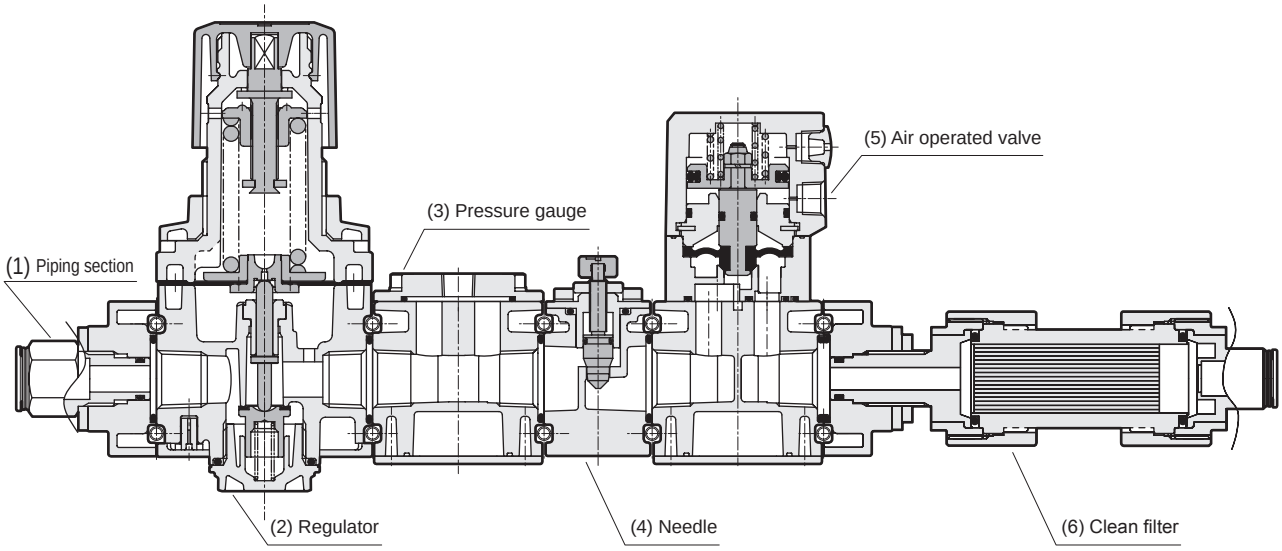

No.	Part name		Flow path material
(1)	Piping section		Aluminum alloy, brass (nickeling), fluoro rubber, nitrile rubber, hydrogenated nitrile rubber
(2)	Regulator		Aluminum alloy, zinc alloy, nitrile rubber, hydrogenated nitrile rubber, fluoro rubber, polyacetal resin
(3)	Pressure gauge	Port only	Aluminum alloy, fluoro rubber
		G49D	Stainless steel, steel (chrome plating)
		PX1	Stainless steel, hydrogenated nitrile rubber
(4)	Needle		Aluminum alloy, brass (nickeling), nitrile rubber, fluoro rubber
(5)	Air operated valve		Aluminum alloy, stainless steel, fluoro rubber, polypropylene, ethylene propylene rubber
(6)	Clean filter		Aluminum alloy, fluoro rubber, polypropylene, urethane, polyamide

Dimensions (1 system) CAD

● CAU30- □ -R □ GY49N1V □ F (Regulator, pressure gauge, needle, valve, filter)

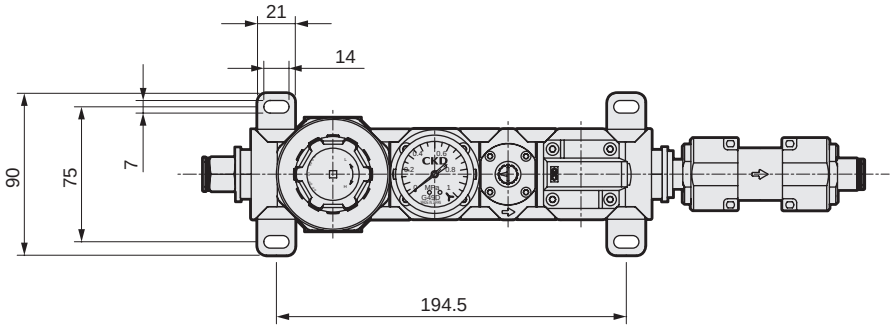

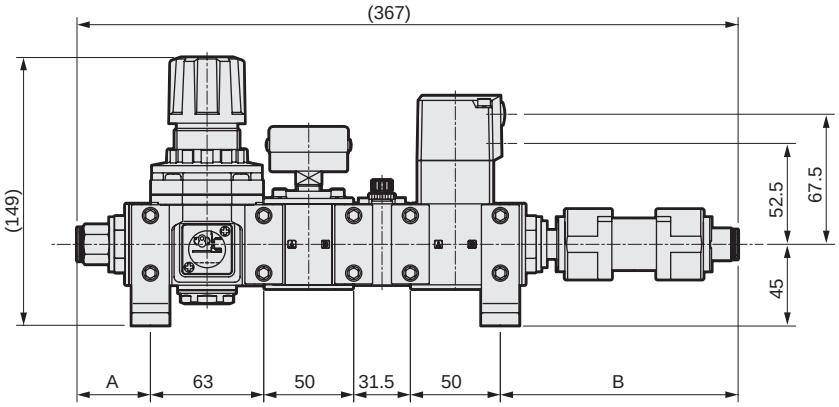

Port size dimensions table

Port size	A	B
H10	41	132
H12	42.5	133.5

* Dimensions of "T6" and "PX1" pressure gauges are the same as those of "GY49".

Dimensions (1 system)

● CAU30-□-R□N1V□F
(Regulator, needle, valve, filter)

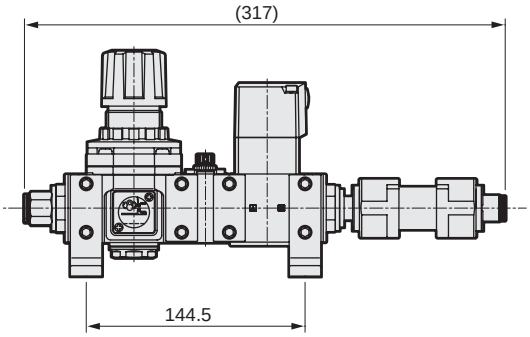

● CAU30-□-R□GY49V□F
(Regulator, pressure gauge, valve, filter)

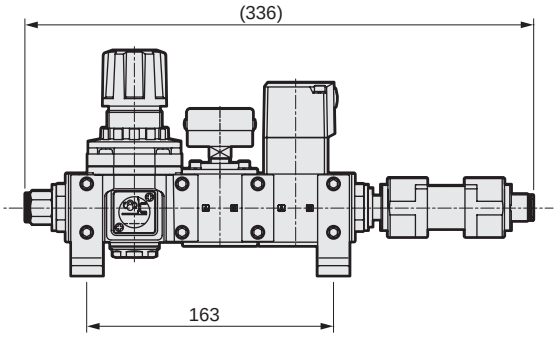

● CAU30-□-R□GY49N1F
(Regulator, pressure gauge, needle, filter)

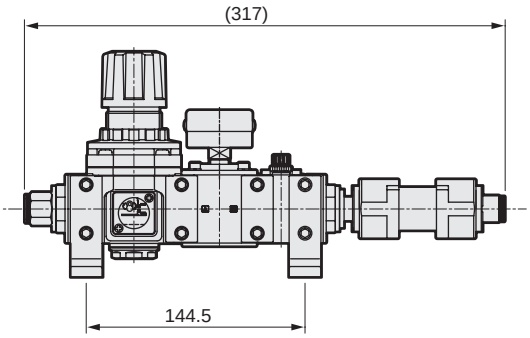

● CAU30-□-R□GY49F
(Regulator, pressure gauge, filter)

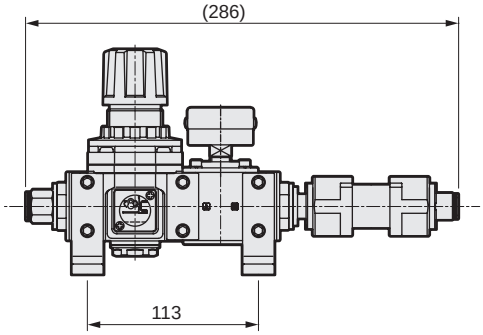

● CAU30-□-R□V□F
(Regulator, valve, filter)

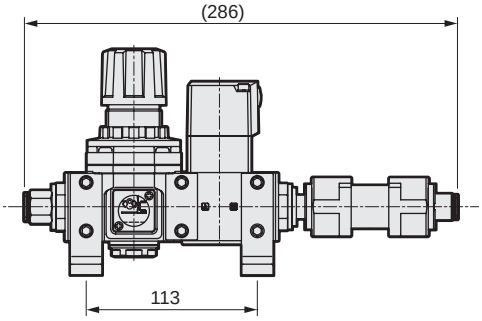

● CAU30-□-R□F
(Regulator, filter)

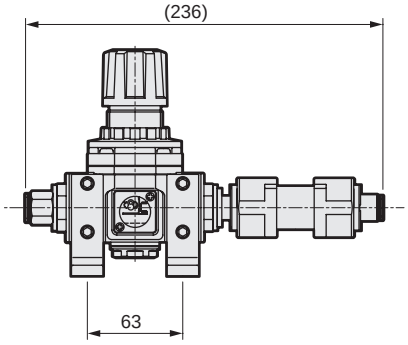

● CAU30-□-R□N1F
(Regulator, needle, filter)

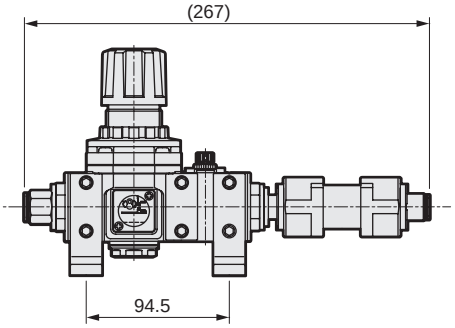

* Dimensions of "T6" and "PX1" pressure gauges are the same as those of "GY49".

SCPD3
SCM
SSD2
MDC2
SMG
LCM
LCR
LCG
LCX
STM
STG
STR2
MRL2
GRC
Cylinder switch
MN3E MN4E
4GA/B
M4GA/B
MN4GA/B
F.R (module unit)
Clean F.R
Precision R
Press gauge Diff. press gauge
Electro-pneumatic R
Speed controller
Auxiliary valve
Fitting/ tube
Clean air unit
Pressure sensor
Flow rate sensor
Valve for air blow
Ending

Dimensions (2 systems)

● CAU30-□-2-R□GY49N1V□F (Regulator, pressure gauge, needle, valve, filter)

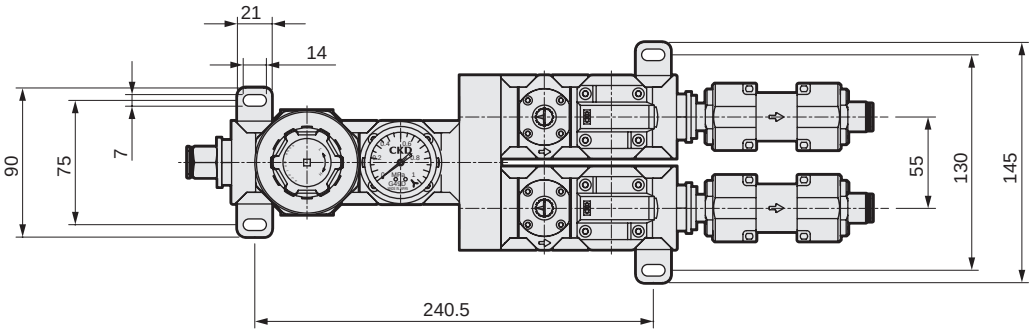

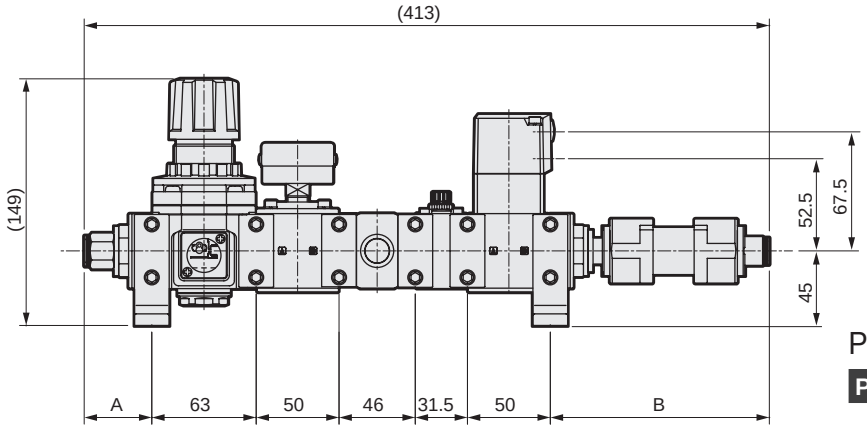

Port size dimensions table

Port size	A	B
H10	41	132
H12	42.5	133.5

● CAU30-□-2-R□N1V□F
(Regulator, needle, valve, filter)

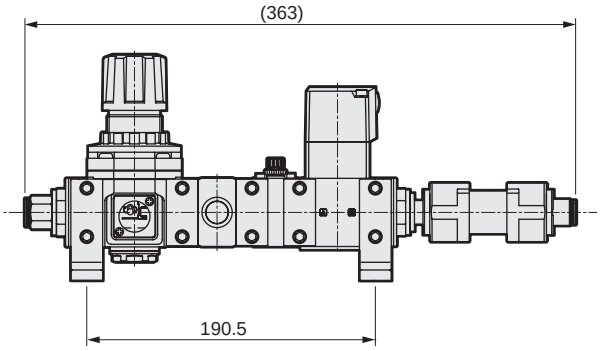

● CAU30-□-2-R□GY49V□F
(Regulator, pressure gauge, valve, filter)

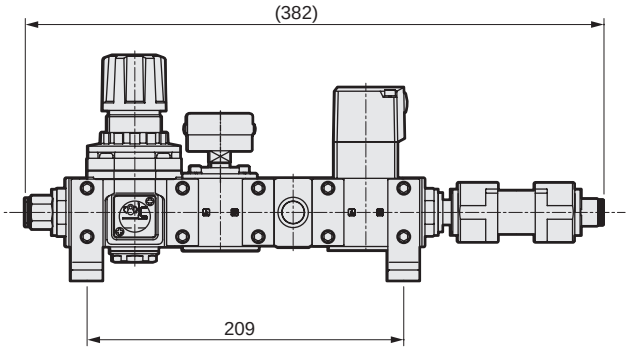

* Dimensions of "T6" and "PX1" pressure gauges are the same as those of "GY49".

Dimensions (2 systems)

● CAU30-□-2-R□GY49N1F
(Regulator, pressure gauge, needle, filter)

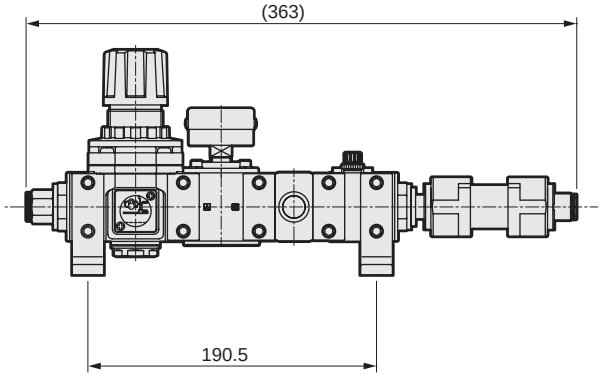

● CAU30-□-2-R□GY49F
(Regulator, pressure gauge, filter)

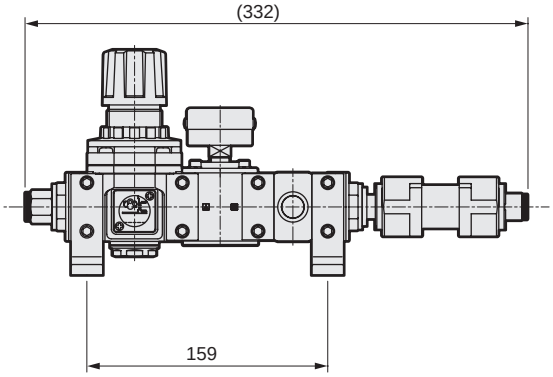

● CAU30-□-2-R□V□F
(Regulator, valve, filter)

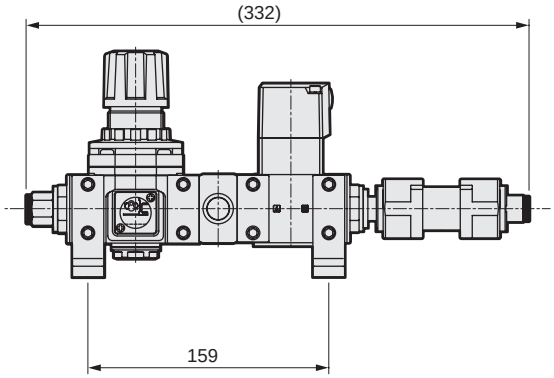

● CAU30-□-2-R□F
(Regulator, filter)

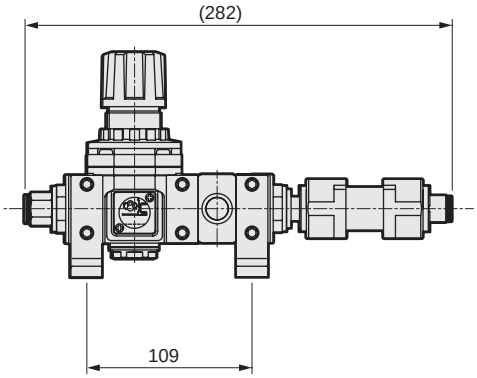

● CAU30-□-2-R□N1F
(Regulator, needle, filter)

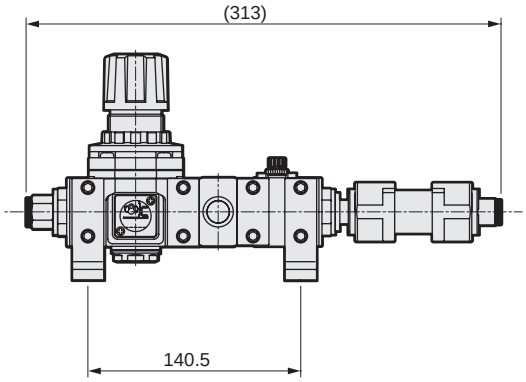

* Dimensions of "T6" and "PX1" pressure gauges are the same as those of "GY49".

Flow characteristics

● Regulator's set pressure and the corresponding flow characteristics

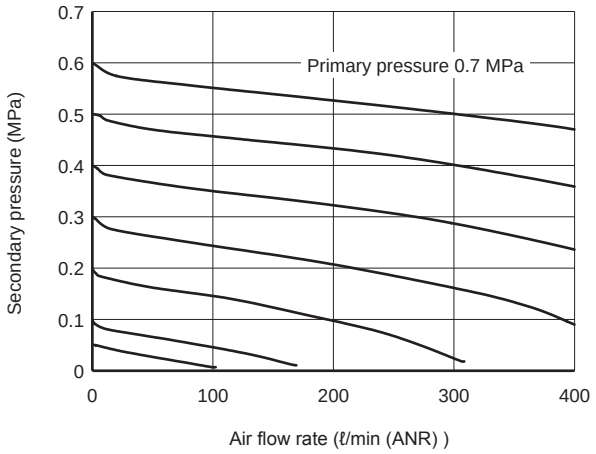

● Dial rotations (needle position) and the corresponding flow characteristics

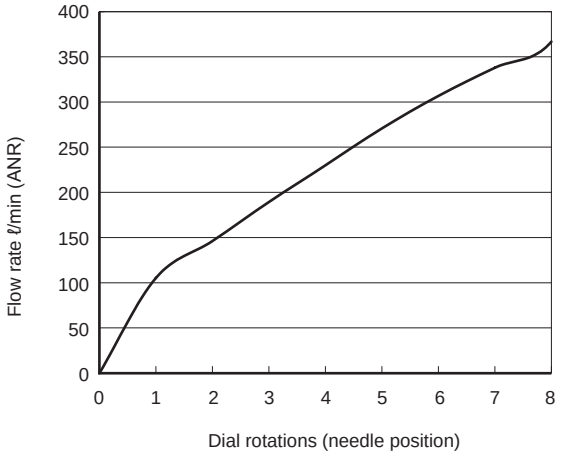

Note 1: Flow characteristics when the regulator, pressure gauge, needle valve, air operated valve, and filter are assembled and the needle is fully open.

Safety Precautions

Pneumatic components

Always read this section before use.

Design & selection

1. Common

WARNING

- Use this product in accordance with the specifications range.
- This product is designed for industrial use. Do not use it in medical or human life related devices and circuits.
- Take measures to prevent harm to operators or objects if this product fails.
- Understand compressed air features before designing a pneumatic circuit.
- For detailed cautions, refer to the catalog of each equipment.

CAUTION

- Check the working circuit and working fluid.
  Install dryer, air filter and oil mist filter on the pneumatic pressure source side, and remove water and oil.

2. Regulator

WARNING

- Always provide a safety system in locations where an output pressure that exceeds the regulator set pressure can cause damage to or malfunction in the secondary-side equipment.
- If the regulator cannot be used with the secondary side sealed circuit or balance circuit, contact CKD.
  Depending on use, such as when back pressure rises, set pressure may increase by 0.2 MPa.

CAUTION

- When the primary pressure is released, the secondary pressure flows to the primary side.
  If flowing of the secondary side fluid to the primary side causes faults in other devices, provide a circuit to maintain the pressure.
- The setting range for the regulator's secondary side pressure should be within 85% of that of the primary side. Otherwise, the pressure drop may increase.
- When used in applications where primary pressure is 0.7 MPa and over, keep the difference between primary pressure and set pressure within 0.4 MPa.
  Pulsation could occur if the difference in pressures is large and secondary piping is large. If so, lower primary side pressure or restrict the secondary line. Contact CKD if the pulsation still does not cease.

3. Needle

CAUTION

- This valve cannot be used as a stop valve that has no leakage. Slight leakage is allowed in product specifications.

4. Air operated valve

WARNING

- This product cannot be used as an emergency shut-off valve.
  The valves listed in this catalog are not designed as valves to ensure safety such as emergency shutoff valves. When using in such a system, always take separate measures that will accurately ensure safety.

CAUTION

- External pilot air
  (1) Measure against drain - A large amount of drain (water, oxidized oil, tar and foreign matter) is contained in compressed air. This creates a factor that significantly reduces the reliability of the pneumatic components. As measures against drain, improve air quality (clean air) by dehumidifying with an after cooler or dryer, removing foreign matter with a filter, and removing tar with a tar removal filter, etc.
  (2) Filter - Install a filter with a 5 μm or less filter element.

5. Inline clean filter

WARNING

- Do not use this product in an atmosphere containing organic solvents or chemicals, etc., or where the product could come in contact with them.
  Not observing this could damage the polyamide housing.

CAUTION

- Do not flow over the max. flow rate.
  Not observing this could degrade the filtration accuracy or damage element membrane.
- This device cannot be used as an absolute filter.
  Filtration accuracy is 99.99% within specified conditions.
  Do not use the product if foreign matter must strictly be kept out (e.g., direct blowing on wafers).
- Alcohol is used in the manufacturing line of some parts of the product.

* For safety precautions for the digital pressure sensor (PPX-R10N-6M-P12), refer to "Pneumatic, Vacuum and Auxiliary Components (No.CB-024SA)."

Mounting / Installation / adjustment

1. COMMON

⚠ CAUTION

■ Open the package in a clean room.
- This product is packed in a cleanroom. It is recommended that the package is opened immediately before making the piping in the clean room.

■ Install the product avoiding direct sunlight.

■ Do not install this product in a location where it is subjected to vibrations or shocks.

■ Securing of maintenance space
- Secure sufficient space for maintenance and inspection.

■ Always thoroughly read the instruction manual before installing this product.

■ Check the flow direction with arrow and connect correctly.

■ Pipe so no excessive force is applied to the product.
- Do not apply tension, pressure, bending, or external force by tube etc., during installation and use.

■ Select correct piping tube.
- Use CKD's soft nylon tube and urethane tube.
- Contact CKD for other fluorine resin tube, etc.

■ Securely insert a tube into the push-in fitting before use.

■ When supplying compressed air for the first time after connecting pipes, do not apply high pressure suddenly.
- Connected piping could be dislocated and tubing could bounce.

■ Flush and clean the pipes when using the pipe.
- Dirt or foreign materials in piping will lower product performance.

■ Air quality: Compressed air of JIS B 8392-1: 2012 Class 1.3.1 is recommended.
- Use compressed air that does not contain oxidized oil, tar and carbon from the air compressor.
- Use CKD's clean air system components according to your application.

Compressed air quality grade by JIS B 8392-1: 2012

Grade	Solid particle				Humidity and moisture		Oil
	Max. number of particles in 1 m³ according to the particle size d (μm)			Mass concentration Cp	Pressure dew point	Water content concentration Cw	Total oil concentration
	0.1 < d ≦ 0.5	0.5 < d ≦ 1.0	1.0 < d ≦ 5.0	mg/m³	°C	g/m³	mg/m³
0	Conditions stricter than Grade 1 to be specified by user or supplier.						
1	≦ 20,000	≦ 400	≦ 10	-	≦ -70	-	≦ 0.01
2	≦ 400,000	≦ 6,000	≦ 100	-	≦ -40	-	≦ 0.1
3	-	≦ 90,000	≦ 1,000	-	≦ -20	-	≦ 1
4	-	-	≦ 10,000	-	≦ +3	-	≦ 5
5	-	-	≦ 100,000	-	≦ +7	-	-
6	-	-	-	0 < Cp ≦ 5	≦ +10	-	-
7	-	-	-	5 < Cp ≦ 10	-	Cw ≦ 0.5	-
8	-	-	-	-	-	0.5 < Cw ≦ 5	-
9	-	-	-	-	-	5 < Cw ≦ 10	-
X	-	-	-	Cp > 10	-	Cw > 10	> 5

Details have changed due to revision of JIS B 8392-1: 2003 to JIS B 8392-1: 2012.

For example,
"grade 1:2:1" means:
- Solid particles 0.1 to 0.5 μm are 20,000 particles or less, 0.5 to 1.0 μm are 400 particles or less, and 1.0 to 5.0 μm are 10 particles or less
- Pressure dew point -40°C or less
- Oil concentration 0.01 mg/m³ or less

■ Do not move or swing the product holding the adjustment knob, clean filter or pressure gauge on the regulator.
- Hold the body when carrying the product.

■ For detailed cautions, refer to the catalog of each equipment.

2. Needle

⚠ CAUTION

■ Do not turn the dial forcibly when fully closing or opening it. Do not use the lock nut to adjust the needle. Otherwise this could cause needle galling or damage.

■ Check that lock nuts are not loose.

■ Check the needle valve speed of rotation.
- Turning the needle too much may cause galling or damage although the product has a retainer mechanism. Check the number of rotations for the product used.

■ Fully close the needle, and open to adjust speed.
- The needle closes when turned to the right and opens when turned to the left.

3. Air operated valve

⚠ CAUTION

■ Check the supply port on the pilot operation side when piping.

Model No.	Pilot operation side supply port
CAU30-*V1*	X
CAU30-*V3*	X and Y

■ Refer to the table below for tightening torque of the pilot air piping.

Nominal pipe diameter	Recommended pipe tightening torque (N·m)
Rc1/8	7 to 9

■ Grease is applied to the pilot valve.
Perform an appropriate exhaust treatment of pilot air when using the single acting in a clean room.

4. Pressure gauge

⚠ CAUTION

■ Repeated sudden increases and decreases in pressure and pressure pulsation must be avoided because it could adversely affect pressure gauge life.

* For safety precautions for the digital pressure sensor (PPX-R10N-6M-P12), refer to “Pneumatic, Vacuum and Auxiliary Components (No.CB-024SA).”

During use & maintenance

1. COMMON

⚠ WARNING

- Use within the max. working pressure and max. operating pressure ranges.

⚠ CAUTION

- Carefully read the instruction manual before starting use and maintenance.
- Before conducting maintenance, stop the supply of the fluid and make sure that there is no residual pressure.
- Do not disassemble and modify the products.
- Do not use products as footing or place any heavy objects on top of the products.
- Storage
  - Do not store this product in a hot, humid atmosphere or atmospheric conditions outface of the specified range for a prolonged period of time. Storing the product in such an environment can result in deterioration of the resin and rubber.
  - Contact CKD when storing products outface of the specified range.
- For detailed cautions, refer to the catalog of each equipment.

2. Air operated valve

⚠ WARNING

- To ensure optimum use, inspect the product every six months. This frequency varies with the frequency of use.

⚠ CAUTION

- If the product has not been in use for over one month, perform a test run before starting actual operation.
- Pilot air pressure
  Use the product with a pilot air pressure in the specified range.

3. Inline clean filter

⚠ WARNING

- Prevent the generated ozone from passing through the filter. Otherwise the filter element may be degraded. Take care especially when using an ozone generator (e.g., ionizer) together.
  (1) Do not install it in the upstream of the filter.
  (2) When installing it in the downstream of the filter, stop air while neutralizing static electricity since generated ozone may flow back.
- Check the filter periodically and replace it if necessary.

⚠ CAUTION

- Performance could drop if the filter element is clogged. Regularly inspect and replace the element.
- Check the resin for cracks, damage, and other deterioration periodically.
  - Cracks, damage or other deterioration could result in breakage, so if found, replace with a new product.

* For safety precautions for the digital pressure sensor (PPX-R10N-6M-P12), refer to “Pneumatic, Vacuum and Auxiliary Components (No.CB-024SA).”

Sensors (Pressure sensor/ Flow rate sensor)

Page

Pressure sensor

Electronic pressure switch 1015

Flow rate sensor

Small size flow rate sensor (RAPIFLOW) 1045

Electronic pressure switch

Sensors/pressure sensor

Overview

Air pressure is electronically detected, displayed and outputted.

Features

Various options

Wide variation is available from compact sensor to indicator.

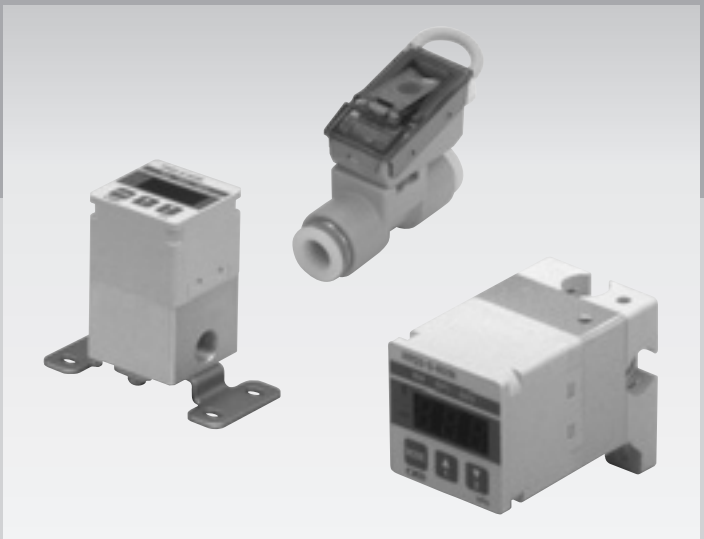

CONTENTS

- **Sensor-amplifier integrated without display (PPE) 1016**
- **Sensor-amplifier integrated without display analog output (PPE-*A) 1018**
- **Sensor-amplifier integrated with display/separated [Stainless steel diaphragm sensor] (PPD3-S) 1020**

⚠ Safety precautions 1034

Compact electronic pressure switch

PPE Series

Overview

Pressure switch PPE Series is the trimmer setting type semiconductor pressure switch developed for pneumatic/vacuum systems. Usage is flexible due to compact shape and three types of piping connection (R1/8, ø6 plug, ø6 push-in fitting).

Features

- Semiconductor pressure sensor
  Semiconductor sensor used for pressure detection, high precision and high reliability are achieved.
- 2-wire
  In 2-wire types, wiring man-hour is reduced, and both PLC input formats (source and sink) can be used.
- High proof pressure
  Proof pressure of negative pressure (V01) is as high as 0.6 MPa, so the product can withstand to vacuum break by pressurization.
- Reverse connection/overcurrent protection circuit integrated
  A protection circuit for improper wire connection (reverse connection, load short circuit) is integrated.
- Wide port size
  R1/8
  ø6 plug
  ø6 push-in fitting

Specifications

Model No. / Descriptions	Vacuum	For positive pressure	
	PPE-V01-□ *1	PPE-P01-□ *1	PPE-P10-□ *1
Rated pressure	-101.3kPa to 0	0 to 100 kPa	0 to 1 MPa
Tag plate color *2	Red	Green	Blue
Pressure sensitive element	Diffusion semiconductor pressure sensor		
Applicable fluid	Air/non-corrosive gas		
Proof pressure	0.6 MPa	0.3 MPa	1.5 MPa
Repeatability	±1% F.S.		
Hysteresis	3% F.S. or less		
Temperature characteristics	±3% F.S.		
Load voltage	10 to 30 VDC		
Load current	5 to 50 mA		
Internal voltage drop	4 V or less		
Leakage current	1 mA or less		
Indicator lamp	Yellow LED ON when lit		
Lead wire length	Standard 3 m (oil resistant vinyl cabtyre cable 2-conductor 0.15 mm^2 insulator outer diameter ø1.0)		
Operating ambient temperature	0°C to 50°C (no freezing)		
Vibration resistance	10 to 55 Hz compound amplitude 1.5 mm 4 hours per X, Y, Z direction		
Degree of protection	IEC standards IP65 or equivalent		
Piping method	R1/8, ø6 plug, ø6 push-in fitting		
Weight	PPE-□-6/-H6-B: approx. 37 g, PPE-□-H6: approx. 42 g		

*1: □ parts form will be in accordance with piping section shape. (Refer to how to order)
*2: Tag plate color is changed per pressure range. (To prevent improper use)

How to order

PPE - V01 - 6 - P70

- Ⓐ Pressure range
- Ⓑ Piping shape
- Ⓒ Clean room specifications

Code	Content
Ⓐ Pressure range	
V01	-101.3 to 0 kPa
P01	0 to 101 kPa
P10	0 to 1 MPa
Ⓑ Piping shape	
6	R1/8
H6-B	ø6 mm plug
H6	Inline of push-in fitting for ø6 (2 pcs.)
Ⓒ Clean room specifications	
	Structure/treatment
P70	Dust generation treatment
P80	Oil-prohibited

Dimensions

● PPE-□-6

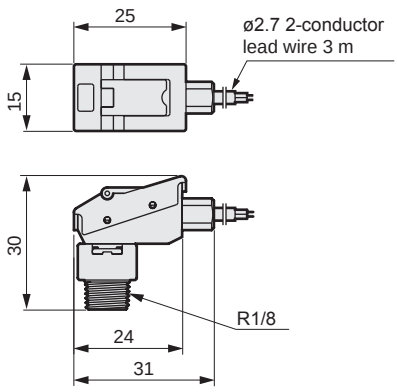

● PPE-□-H6-B

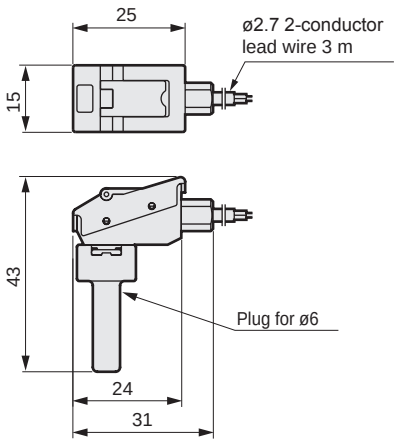

● PPE-□-H6

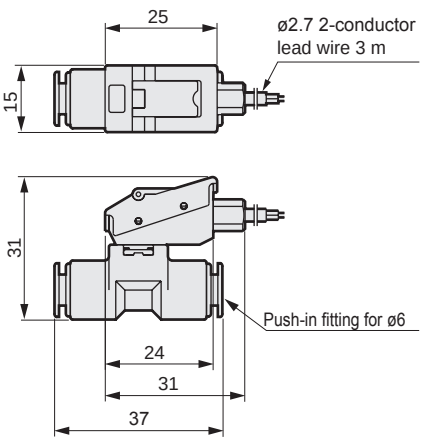

Refer to Precaution PPE Series on pages 1038 to 1039 for each component.

Internal circuit / connection method

● Internal circuit diagram

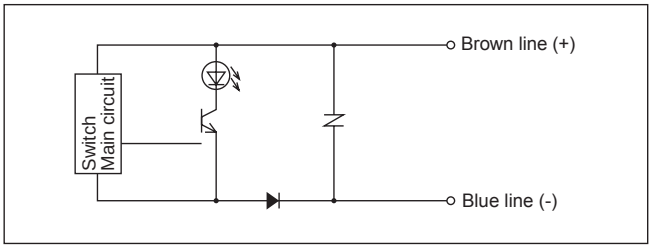

● Connecting the lead wire

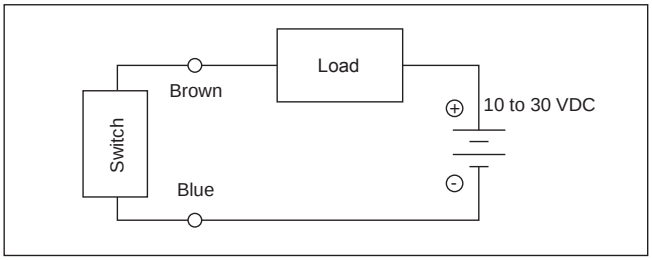

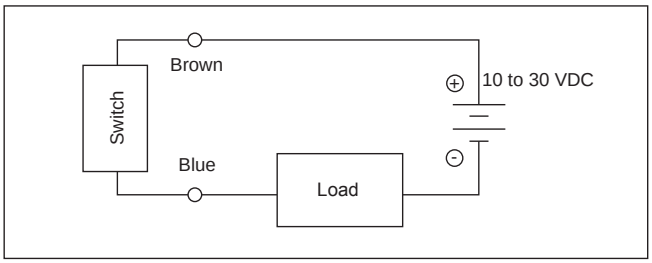

● Connection to programmable controller (sequencer)

● Connection to source load input (external power supply)

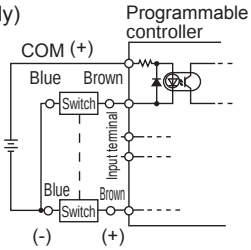

● Connection to source load input (internal power supply)

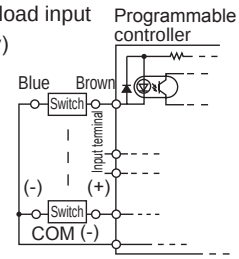

● Connection to sink input

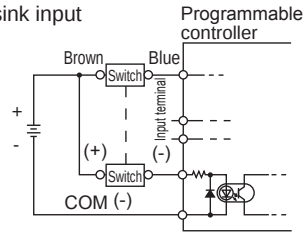

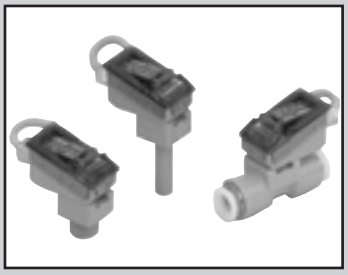

Compact electronic pressure sensor
Analog output

PPE-□A Series

JIS symbol

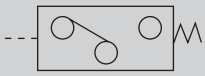

Overview

Pressure sensor PPE-A Series is semiconductor pressure sensor developed for pneumatic and vacuum systems.
Output promotional to impressed pressure: 1 to 5 V (analog output).
Usage is flexible due to compact shape and three types of piping connection (R1/8, ø6 plug, ø6 push-in fitting).

Features

- Semiconductor pressure sensor: Used semiconductor sensor pressure detection, high precision and high reliability are realized.
- Analog output: Analog output proportional to impressed voltage (1 to 5 V).
- Power supply indicator lamp: When power is energized, green LED lights to show operational status.
- Integrating protection circuit to prevent power supply reverse connection / load short circuit
  A protection circuit for improper wire connection (power supply reverse connection, load short circuit) is integrated.
- Wide port size: R1/8, ø6 plug, ø6 push-in fitting

Specifications

Model No. / Descriptions	For Vacuum	For positive pressure	
	PPE-V01A-□*1	PPE-P01A-□*1	PPE-P10A-□*1
Rated pressure	0 to 100 kPa	0 to 100 kPa	0 to 1 MPa
Tag plate line color *2	Red	Green	Blue
Pressure sensitive element	Diffusion type semiconductor pressure sensor		
Applicable fluid	Air/non-corrosive gas		
Proof pressure	0.3 MPa	0.3 MPa	1.5 MPa
Accuracy	±1% F.S. or less		
Linearity	±0.3% F.S. or less		
Analog output	1 to 5 V (output impedance 1 kΩ)		
Power supply voltage	12 to 24 VDC ±10% (ripple rate 1% or less)		
Current consumption	10 mA or less		
Indicator lamp	Green LED lit when power supply is energized		
Lead wire length	Standard 3 m (oil resistant vinyl cabtyre cable 3-conductor 0.15 mm^2 insulator outer diameter ø1.0)		
Protection circuit	Prevention of power supply reverse connection/load short circuit		
Ambient temperature	0°C to 50°C (no freezing)		
Temperature characteristics	±0.12% F.S./ºC or less		
Insulation resistance	20 MΩ and over at 500 VDC megger		
Withstand voltage	1000 VAC for 1 minute		
Vibration resistance	10 to 55 Hz compound amplitude 1.5 mm 4 hours per X, Y, Z direction		
Degree of protection	IEC standards IP65 or equivalent		
Piping method	R1/8, ø6 plug, ø6 push-in fitting		
Weight	PPE-□-6/-H6-B: approx. 37 g, PPE-□-H6: approx. 42 g		

*1: □ parts form will be in accordance with piping section shape. (Refer to how to order)
*2: Tag plate line color is changed per pressure range. (To prevent improper use)

How to order

PPE - V01 A - 6 - P70

Ⓐ Pressure range
Ⓑ Piping shape
Ⓒ Clean room specifications

Code	Content
Ⓐ Pressure range	
V01	0 to -100 kPa
P01	0 to 100 kPa
P10	0 to 1 MPa
Ⓑ Piping shape	
6	R1/8
H6-B	ø6 mm plug
H6	Inline of push-in fitting for ø6 (2 pcs.)
Ⓒ Clean room specifications	
	Structure/treatment
P70	Dust generation treatment
P80	Oil-prohibited

Dimensions

● PPE-□A-6

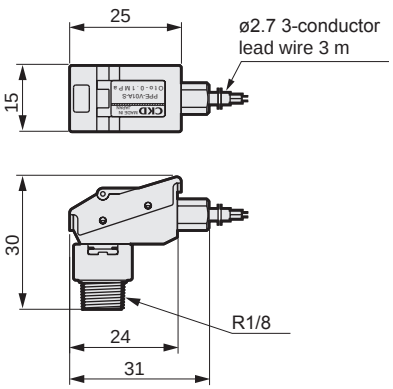

● PPE-□A-H6-B

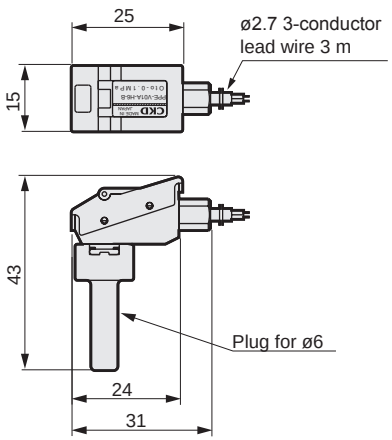

● PPE-□A-H6

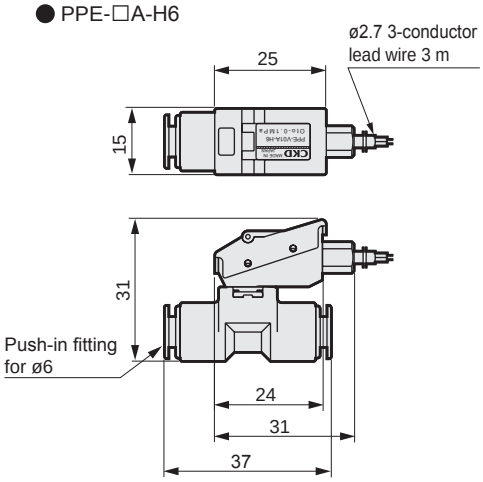

Analog output voltage - pressure characteristics

● PPE-V01A-□

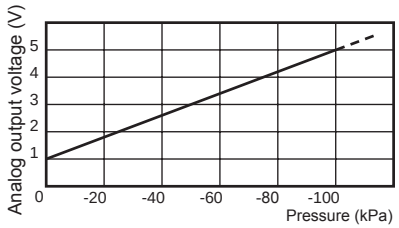

● PPE-P01A-□

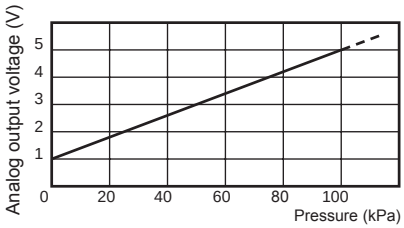

● PPE-P10A-□

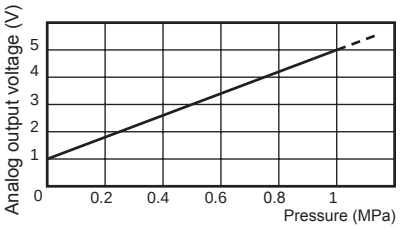

Internal circuit / connection method

[Circuit diagram and connection method]

● Internal circuit diagram

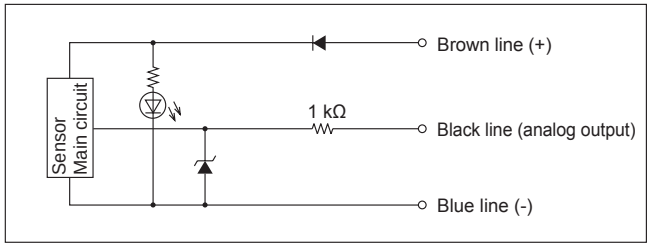

● Lead wire color and descriptions

Line color	Descriptions
Brown	Power supply 12 to 24 VDC
Black	Analog output (1 to 5 V)
Blue	0 V (GND)

● Connecting the lead wire

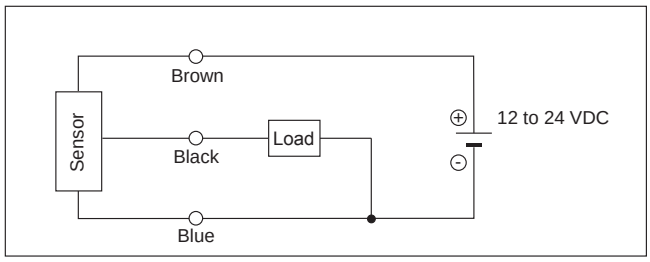

Caution

● Analog output accuracy is also affected by self exoergic at energized other than temperature characteristics. Provide enough standby time (5 minutes and over after energizing) before use.

● Refer to Safety precautions PPE-*A Series on pages 1040 to 1041 for details.

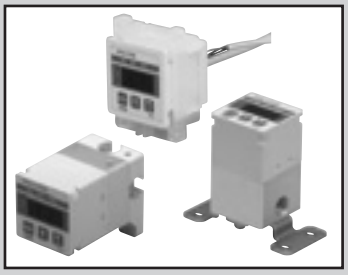

Electronic pressure switch with digital display

PPD3-S Series

Overview

Pressure switch PPD3 Series is appropriate for pneumatic lines. Due to various port options, in addition to source pressure confirmation, suction confirmation and contact confirmation, etc., are possible.

Features

- Model can be easily replaced according to air line conditions deterioration/improvement.
- Push-in fitting resin port (6HD/6HT/H6) is available. These lightweight ports help save space.
- Through ports (6T/6HT/H6) are available. Ideal for suction and seating confirmation. The product can be installed in minimum space.
- Efficient installation setting by convenience functions; peak hold, forcible switching, pressure reading functions, etc.
- CE marking as standard.

Specifications Sensor integrated/sensor separated

Descriptions	PPD3-S		
	R10	R03	R01
Pressure sensitive element	Single stainless steel diaphragm pressure sensor		
Applicable fluid *2	Air/non-corrosive gas/compressed air (including water and drain) *3		
Rated pressure	-100 to 980 kPa *8	-100 to 300 kPa *9	-100 to 100 kPa *10
Display unit	kPa	kPa	kPa
Min. display unit *1	1 kPa		
Proof pressure	2MPa	0.6MPa	0.6MPa
Indicator accuracy (25°C)	±2% F.S.		±3% F.S.
Temperature characteristics (0 to 50°C)	±4% F.S.		±5% F.S.
Leak rate	1 cm^3/min (ANR) or less		
Display	3 digit orange LED display character height 8 mm		
Power supply voltage	12 to 24 VDC ±10% (ripple rate 1% or less)		
Current consumption	50 mA or less (60 mA or less for sensor separated type)		
Switch output	Sensor integrated: N : NPN transistor open collector output 2 points P : PNP transistor open collector output 2 points NA : NPN transistor open collector output 1 point + analog output 1 point PA : PNP transistor open collector output 1 point + analog output 1 point Separated: NA : NPN transistor open collector output 2 points + analog output 1 point PA : PNP transistor open collector output 2 points + analog output 1 point		
Switch output current	50 mA or less		
Switch output voltage drop value	2.4 V or less		
Switch output response time	Approximately 5 msec		
Analog output	1 to 5 V ±0.1 V load impedance: 10 kΩ and over		
Set point holding	EEPROM		
Lead wire	Body: oil resistance vinyl code 4-conductor (0.3 mm^2 insulation O.D. ø1.1) 1m (5-conductor 0.2 mm^2, insulation O.D. ø1.0 for sensor separated type) Sensor for sensor separated type: oil resistance vinyl code 3-conductor (0.15 mm^2 insulation O.D. ø1.0) 3 m		
Ambient temperature	0°C to 50°C		
Ambient humidity	0 to 85% RH (no dew condensation)		
Mechanical vibration proof	10 to 55 Hz compound amplitude 1.5 mm 2 hours per X, Y, Z direction		
Degree of protection	IP65 equiv. *5 (IP40 or equivalent only for indicator section of sensor separated type)		
Protection circuit *6	Power reverse connection protection switch output reverse connection protection, switch output load short-circuit protection		
Weight	PPD3-S-R□-6B: Approx. 105 g		

*1: This indicates min. display unit, and does not guarantee indicator accuracy.
2: Only PPD3-S--P70/P80/P90 are ozone resistance. Contact CKD if required.
*3: For water and other liquid other than above, contact CKD.
*4: Sensor separated is 0.3 MPa.
*5: When an atmosphere inlet port is processed. (Refer to page 1043.)
*6: This product's protection circuit is effective only for specific misconnections and load short-circuits. It does not provide protection for all misconnections.
*7: Do not clean resin part of the product with organic solvents including alcohol. There is a risk of affecting the resin.
*8: -100 kPa to 980 kPa (≈142 psi, 9.8bar)
*9: -100 kPa to 300 kPa
*10: -100 kPa to 100 kPa (≈15 psi, 1bar)

Circuit diagram and connection method

Refer to page 1028.

How to order

PPD3-S - R03 NA D - 6HT - P70

- PPD3-S: Stainless steel diaphragm sensor
- R03: Ⓐ Pressure range
- NA: Ⓑ Output
- D: Ⓒ Shape
- 6HT: Ⓓ Port
- P70: Ⓔ Clean room specifications *1/*2

Code		Content
Ⓐ Pressure range		
R10		-100 to 980 kPa
R03		-100 to 300 kPa
R01		-100 to 100 kPa
Ⓑ Output		
N	For sensor integrated	NPN transistor output 2 points
P	For sensor integrated	PNP transistor output 2 points
NA	For sensor integrated	NPN transistor output 1 point + analog output 1 point
PA	For sensor integrated	PNP transistor output 1 point + analog output 1 point
NA	For sensor separated type	NPN transistor output 2 points + analog output 1 point
PA	For sensor separated type	PNP transistor output 2 points + analog output 1 point
Ⓒ Shape		
Blank		Sensor integrated
D		Sensor separated
Ⓓ Port		
6B	For sensor integrated	Rc1/8, 2 direction port rear side, lower outlet
6T	For sensor integrated	Rc1/8, lateral through port, both sides outlet
6HD	For sensor integrated	Lightweight port with 6 mm push-in fitting (downward)
6HT	For sensor integrated	Lightweight through port with two 6 mm push-in fittings (horizontal both sides)
6B	For sensor separated	Rc1/8

Ⓔ Clean room specifications

	Structure/treatment	Material restriction
P70	Dust generation preventing	-
P74	Dust generation preventing	Copper-based/silicon-based/halogen-based materials (fluorine, chlorine, bromine) are prohibited
P80	Oil-prohibited	-
P84	Oil-prohibited	Copper-based/silicon-based/halogen-based materials (fluorine, chlorine, bromine) are prohibited
P90	Stainless steel material used/Oil-prohibited	-
P94	Stainless steel material used/Oil-prohibited	Copper-based/silicon-based/halogen-based materials (fluorine, chlorine, bromine) are prohibited

*1: Refer to the table below for supported options and clean room specifications.
*2: Clean room specifications P74, P84, P94 are custom order products.

Sensor separated type discrete model. No.

● Model No. of single indicator

Example) **PPD3 - R10 NA D - P70**

- R10: Ⓐ Pressure range
- NA: Ⓑ Output
- P70: Ⓔ Clean room specifications

(Select from the table at right for model No. of column Ⓑ/Ⓒ)

● Discrete sensor model No.

Example) **PPD3 - S - R03 A - 6B - P70**

- R03: Ⓐ Pressure range
- 6B: Ⓓ Port (Only 6B is supported)
- P70: Ⓔ Clean room specifications

(Select from the table at right for model No. of column Ⓐ/Ⓓ/Ⓔ)

Supported options and clean room specifications

		Model No.	Clean room specifications					
			P70	P74	P80	P84	P90	P94
Sensor integrated	Stainless steel diaphragm sensor	PPD3-S-*-6B/6T	○	○	○	○	○	○
		PPD3-S-*-6HD/6HT	○	○	○	○		
	Mounting brackets/kits	PPD3-KL/KD	○	(Available for P70)				
		PPD3-KC	○	(Available for P70)				
		PPD3-KHS	○	○	○			
Separated	Stainless steel diaphragm sensor	PPD3-S-*D-6B	○	○	○	○	○	○
	Indicator (discrete)	PPD3-*D	○	(Available for P70)				
		PPD3-*A-6	○		○			
	Stainless steel diaphragm sensor (discrete)	PPD3-S-*A-6B	○	○	○	○	○	○
	Mounting brackets/kits	PPD3-KL/KD-D	○	(Available for P70)				
		PPD3-KHS-D	○	(Available for P70)				

SCPD3
SCM
SSD2
MDC2
SMG
LCM
LCR
LCG
LCX
STM
STG
STR2
MRL2
GRC
Cylinder switch
MN3E MN4E
4GA/B
M4GA/B
MN4GA/B
F.R (module unit)
Clean F.R
Precision R
Press gauge Diff. press gauge
Electro-pneumatic R
Speed controller
Auxiliary valve
Fitting/ tube
Clean air unit
Pressure sensor
Flow rate sensor
Valve for air blow
Ending

Mounting brackets/kits

PPD3 - KL - D - P70

Ⓐ Model No.
Ⓑ Shape
Ⓒ Clean room specifications

Code	Content
Ⓐ Model No.	
PPD3-KL	One side mounting foot (L shaped mounting) (set screw attached)
PPD3-KD	Both sides mounting foot (parallel mounting) (set screw attached)
PPD3-KC	Operation protective cover *1
Ⓑ Shape	
Blank	Sensor integrated
D	Sensor separate
Ⓒ Clean room specifications	
	Structure
P70	Dust generation preventing *2

*1 PPD3-KC is common for sensors integrated and separated so when selecting the sensor separated, do not indicate a code for item Ⓑ shape.
*2 Mounting brackets are nickeling.
(Model No. P70 supports P74, P80, P84, P90, P94 environments)

PPD3 - KHS - D - P70

Ⓐ Model No.
Ⓑ Shape
Ⓒ Clean room specifications

Code	Content	
Ⓐ Model No.		
PPD3-KHS	Panel mounting bracket set, with guard (ø6 Push-in fitting attached for integrated)	
Ⓑ Shape		
Blank	Sensor integrated	
D	Sensor separate	
Ⓒ Clean room specifications		
	Structure/treatment	Material restriction
P70	Dust generation preventing	-
P74	Dust generation preventing	Copper-based/silicon-based/halogen-based materials (fluorine, chlorine, bromine) are prohibited
P80	Oil-prohibited	-

*1 Mounting brackets are nickeling.
Sensor separated: Specify Model No. P70.
(supports P74, P80, P84, P90, P94 environments)
Specify either of P70, P74, or P80 for sensor integrated.
(Model No. P80 supports P84 environment)
*2 P74 is custom order product.

Analog output voltage - pressure characteristics

● PPD3-S-R10NA
R10PA

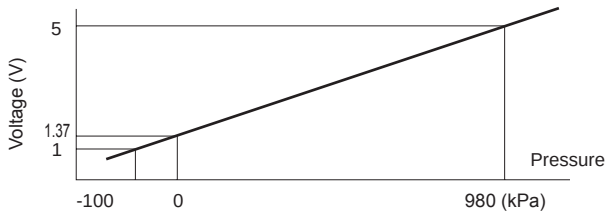

● PPD3-S-R03NA
R03PA

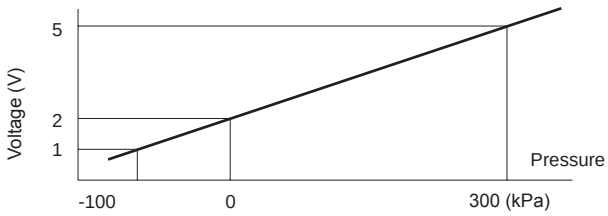

● PPD3-S-R01NA
R01PA

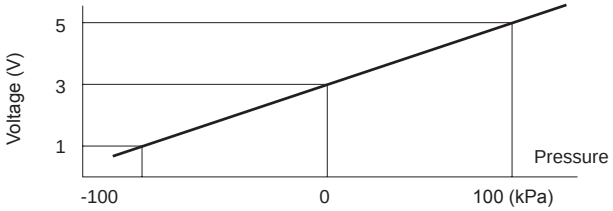

[Caution]
● Analog output accuracy is also affected by self exoergic at energized other than temperature characteristics. Be sure to provide a standby time of 5 minutes and over after power is turned on when using.

Dimensions

Sensor separated (indicator section)

● PPD3-S-*****-D-P70 (indicator section)

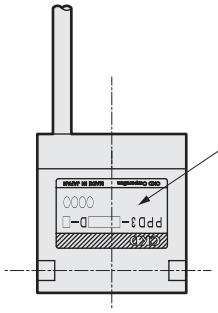

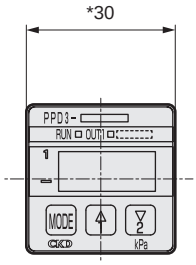

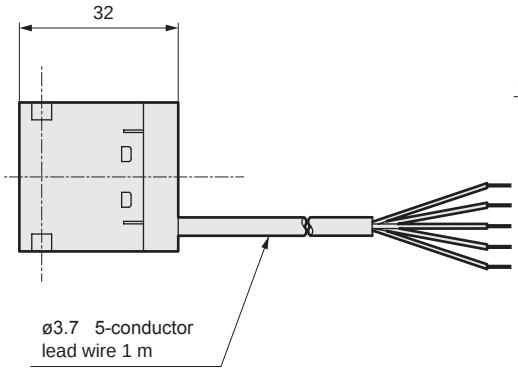

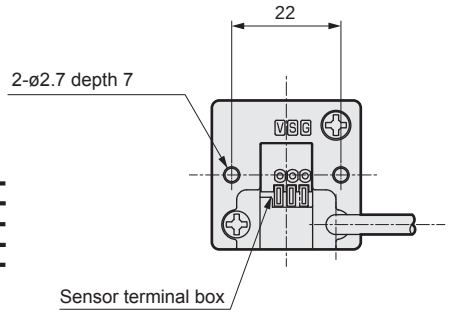

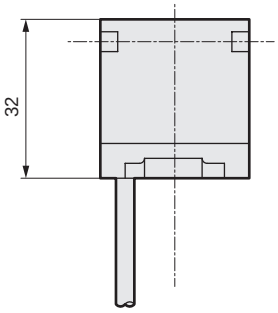

[Sensor terminal box connection]

Code	Sensor lead wire color
V	Brown
S	Black
G	Blue

Dimensions

Sensor separated

- PPD3-S-R**D-6B-P7*/P8*/P9*
- PPD3-S-R**A-6B-P7*/P8*/P9* (discrete sensor model No.)

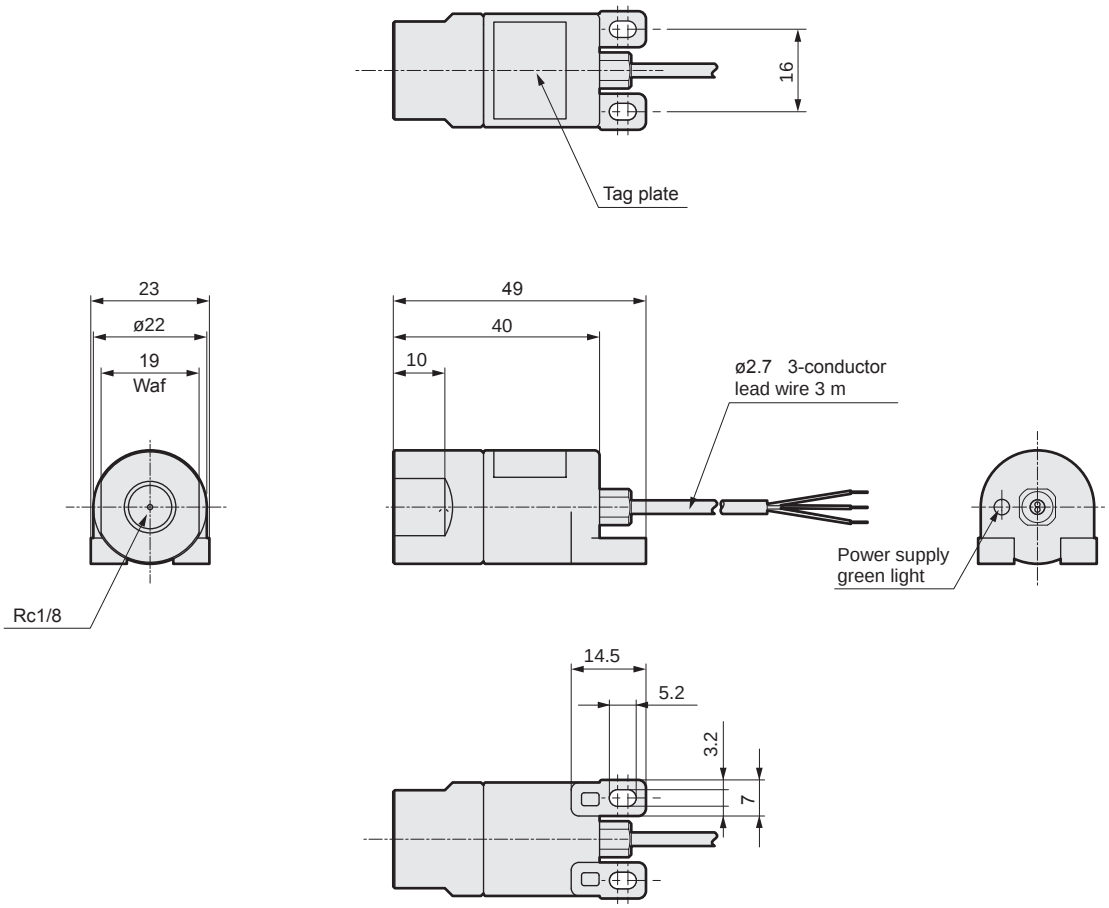

Dimensions

Sensor integrated

● PPD3-S-*****-6B-P7*/P8*/P9*

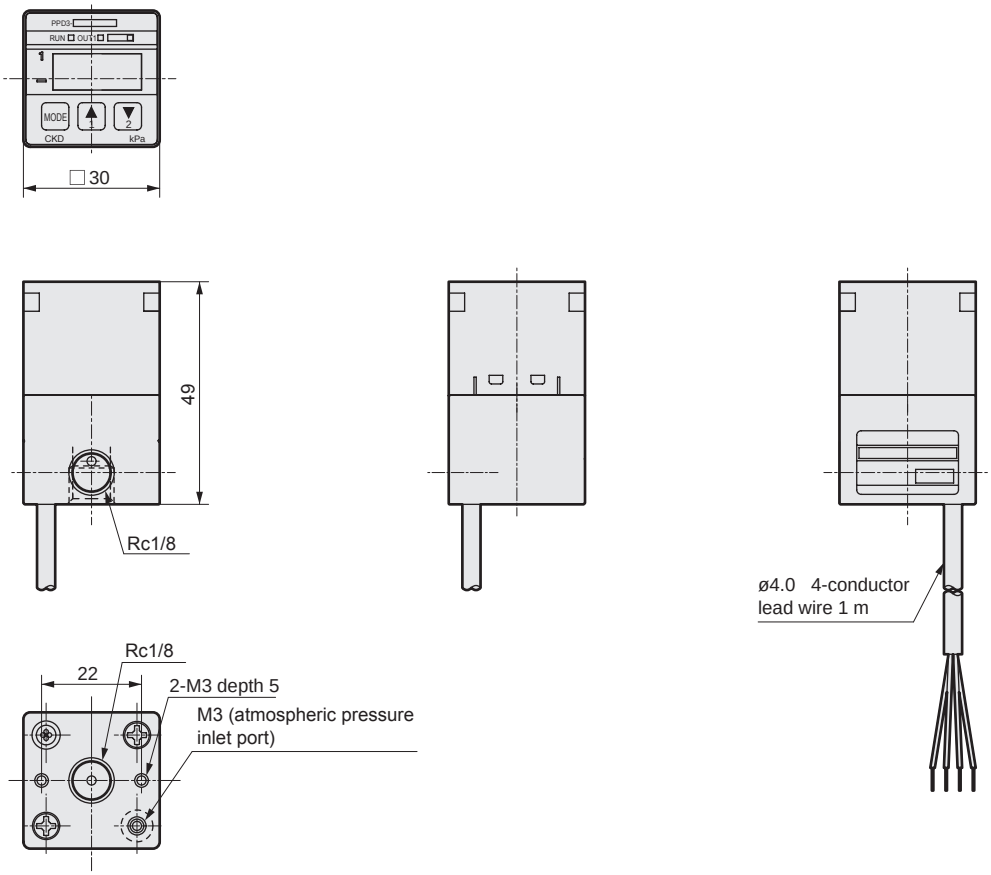

● PPD3-S-*****-6T-P7*/P8*/P9*

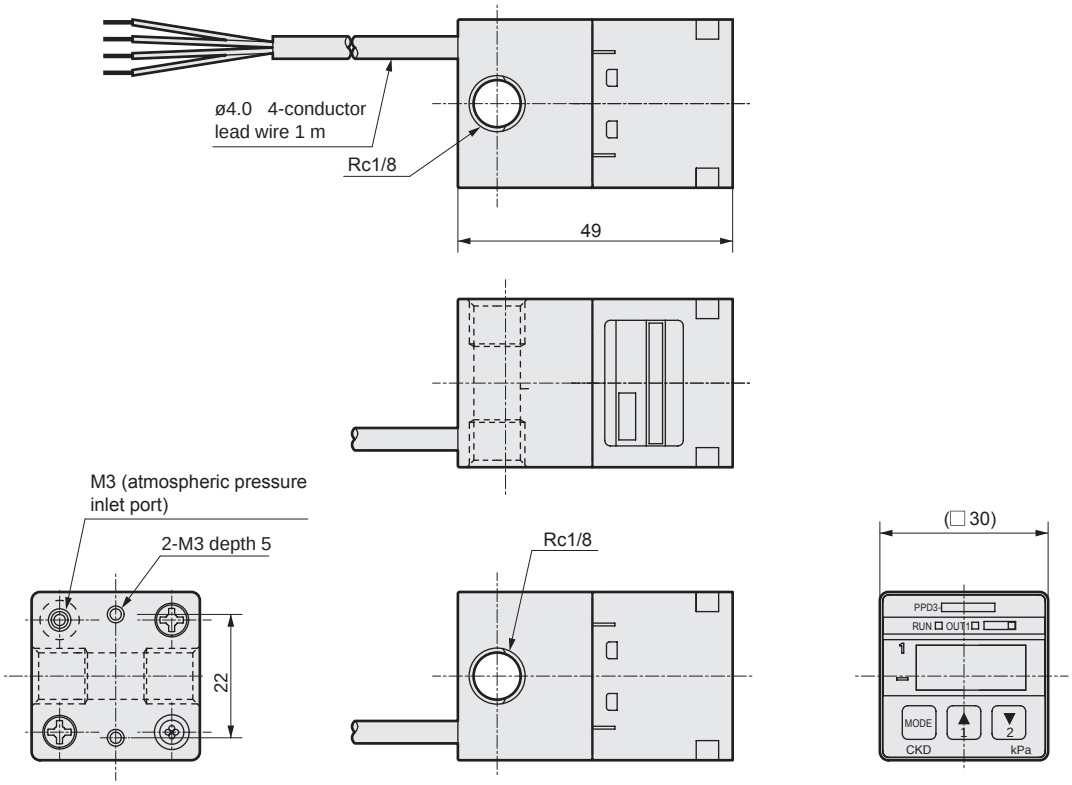

Refer to Safety precautions of PPD3-S Series on pages 1042 to 1044 for wiring method and precautions.

SCPD3
SCM
SSD2
MDC2
SMG
LCM
LCR
LCG
LCX
STM
STG
STR2
MRL2
GRC
Cylinder switch
MN3E MN4E
4GA/B
M4GA/B
MN4GA/B
F.R (module unit)
Clean F.R
Precision R
Press gauge Diff. press gauge
Electro-pneumatic R
Speed controller
Auxiliary valve
Fitting/ tube
Clean air unit
Pressure sensor
Flow rate sensor
Valve for air blow
Ending

Dimensions CAD

Sensor integrated

● PPD3-S-*****-6HD-P70/P80/P90

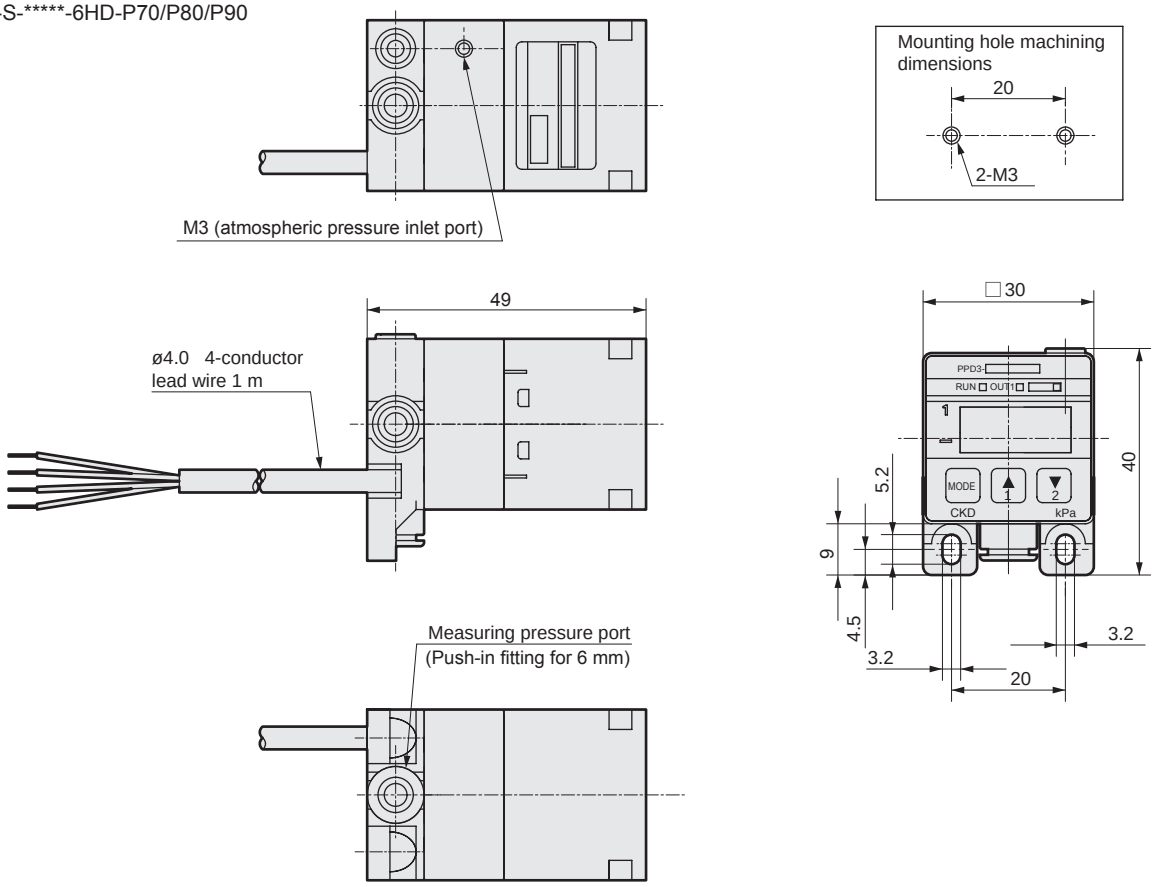

● PPD3-S-*****-6HT-P70/P80/P90

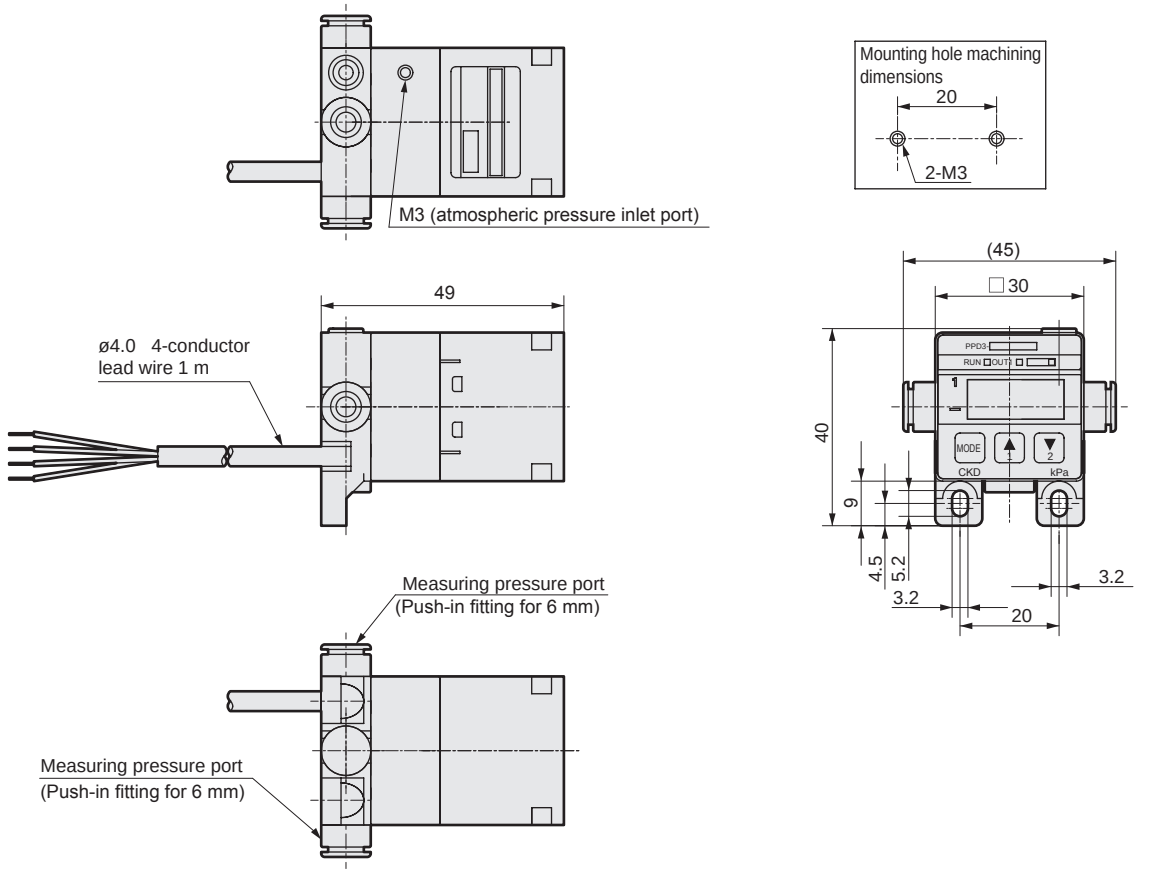

Refer to Safety precautions of PPD3-S Series on pages 1042 to 1044 for wiring method and precautions.

Dimensions: Mounting bracket

● PPD3-KL(-D)-P70 assembly drawing

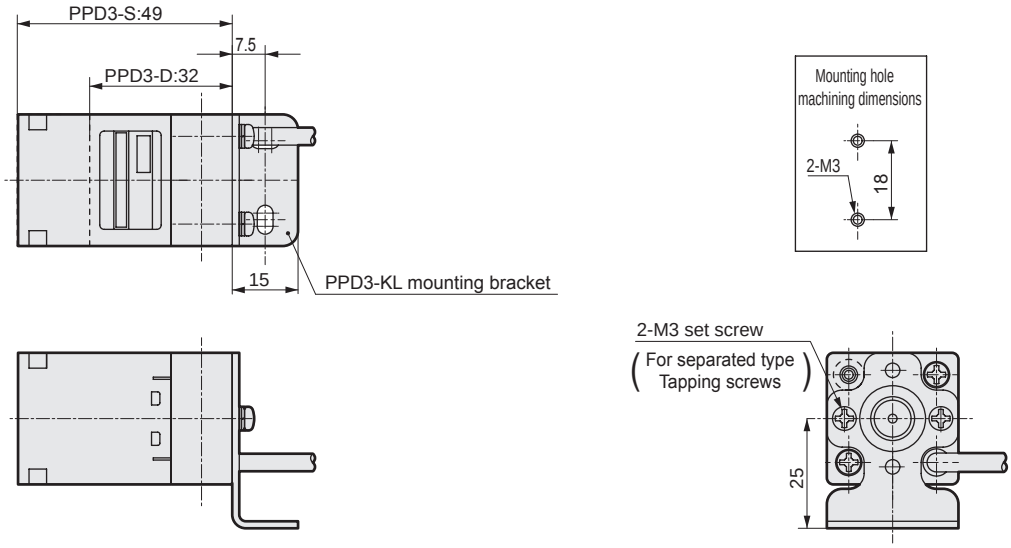

● PPD3-KD(-D)-P70 assembly drawing

Note: For this installation, use CKD miniature fitting FTL4-M3 for atmospheric inlet port. (Sensor integrated only)

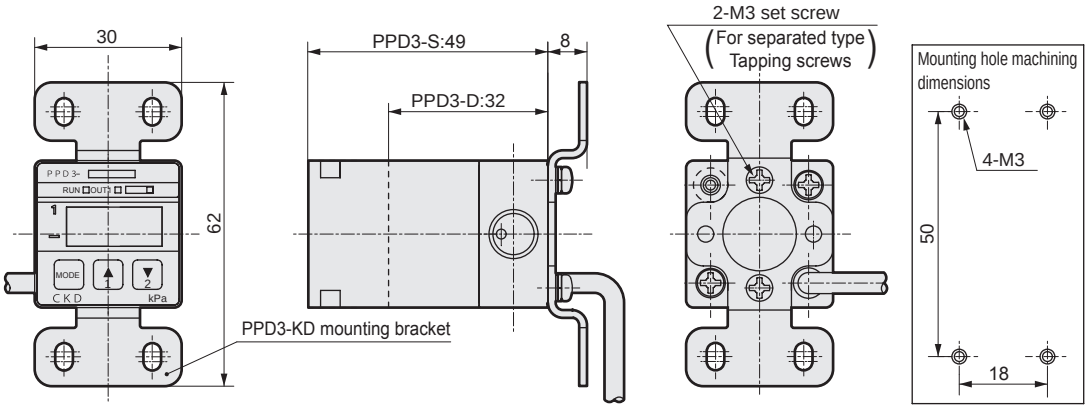

● Miniature fitting FTL4-M3-P70

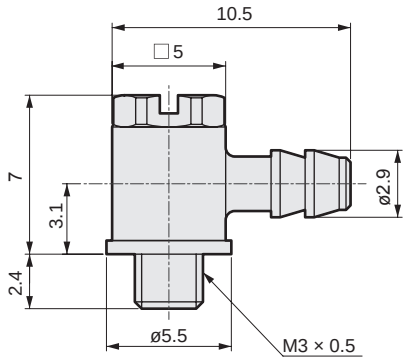

● PPD3-KHS(-D)-P7*/P8* assembly drawing

Note: Push-in fitting is not attached to PPD3-KHS-D.

Combinations with PPD3-R****-6B

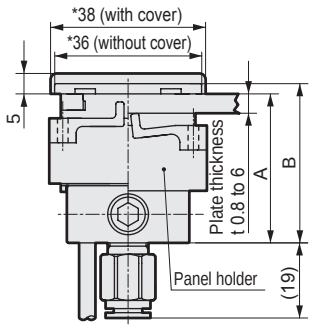

Mounting dimensions for each model

Model No.	A	B
PPD3-S	46.5	49
PPD3-D	29.5	32

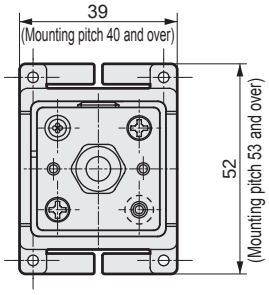

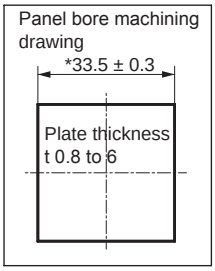

Refer to Safety precautions of PPD3-S Series on pages 1042 to 1044 for wiring method and precautions.

SCPD3
SCM
SSD2
MDC2
SMG
LCM
LCR
LCG
LCX
STM
STG
STR2
MRL2
GRC
Cylinder switch
MN3E MN4E
4GA/B
M4GA/B
MN4GA/B
F.R (module unit)
Clean F.R
Precision R
Press gauge Diff. press gauge
Electro-pneumatic R
Speed controller
Auxiliary valve
Fitting/ tube
Clean air unit
Pressure sensor
Flow rate sensor
Valve for air blow
Ending

Internal circuit/connection method

[Circuit and connection method]

Sensor integrated

● PPD3-S-R**N

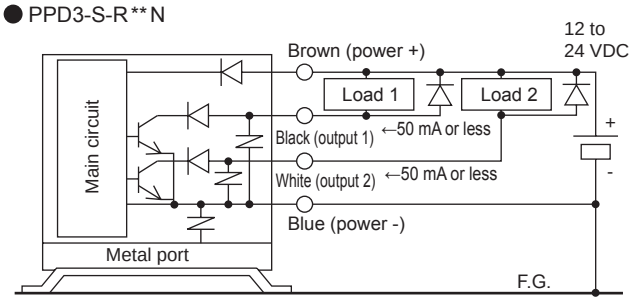

● PPD3-S-R**P

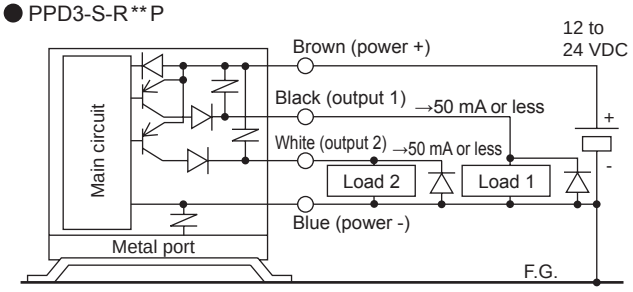

● PPD3-S-R**NA

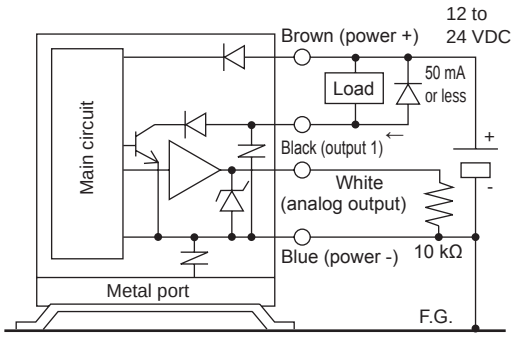

● PPD3-S-R**PA

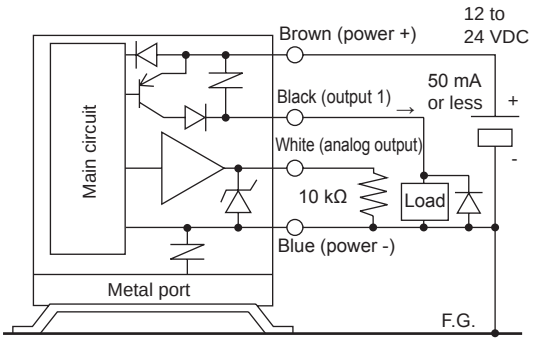

[Circuit and connection method]

Sensor separated

● PPD3-S-R*NAD

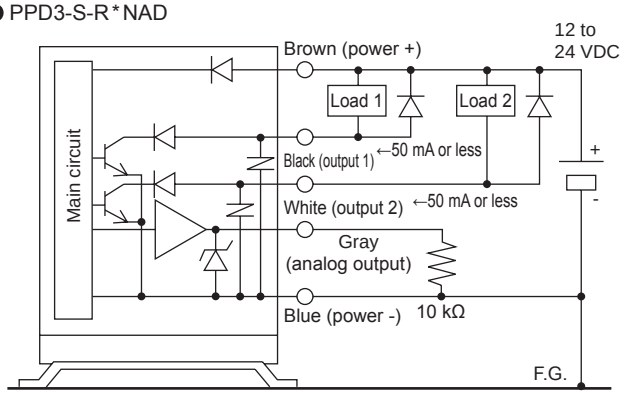

● PPD3-S-R*PAD

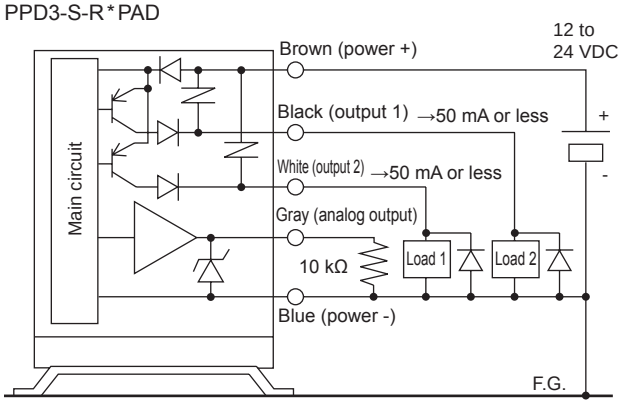

Sensor section connection method

● PPD3-S-R*D

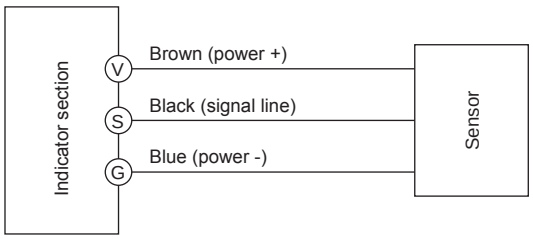

● PPD3-S-R*A Connection method when single sensor is used

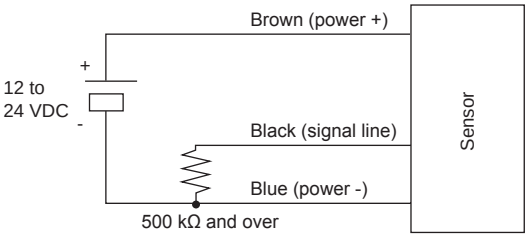

MEMO

Display and function

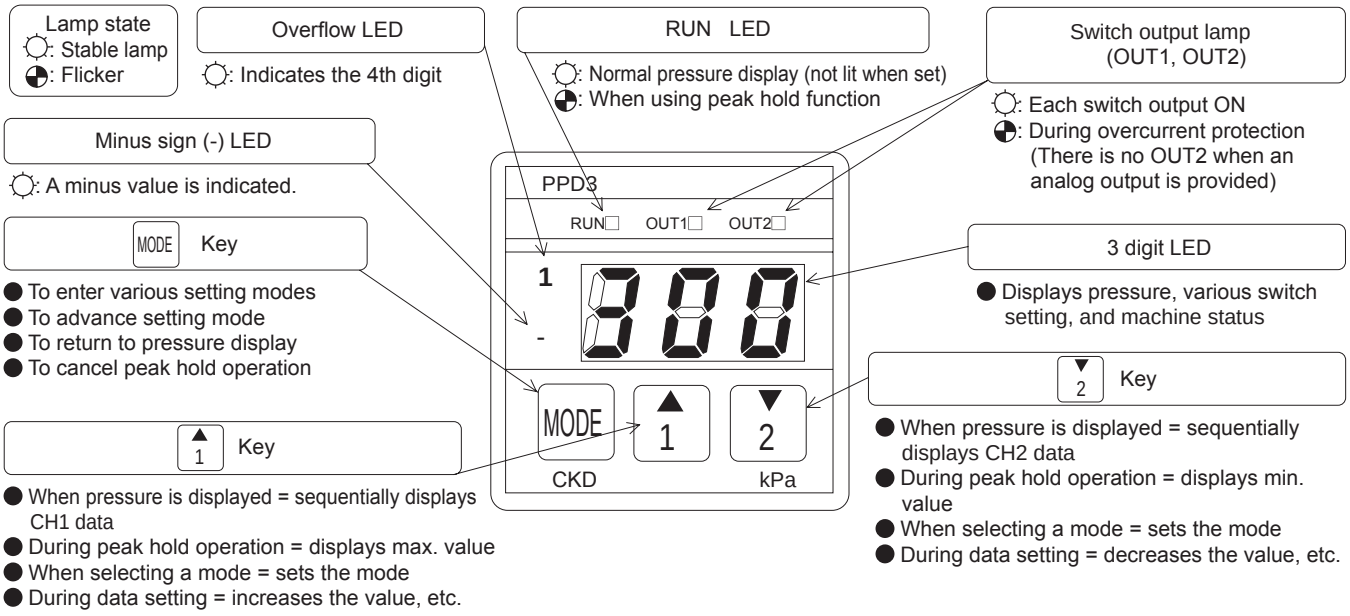

LED display

Numbers and alphabetic characters are displayed with a combination of LED displays.

Numeral	0	1	2	3	4	5	6	7	8	9
Display	0	1	2	3	4	5	6	7	8	9

Character	A	B (b)	C	D (d)	H	I (i)	J	L	N (n)	O (o)	P
Display	A	b	C	d	H	i	J	L	n	o	P

Rated pressure	980 kPa	300 kPa	100 kPa
Model No.	R10	R03	R01
Pressure code	J0 J0	L0 L0	H0 H0

Model No. display

Output	NPN output	PNP output
Model No.	N, NA	P, PA
Output code	N n	P p

Confirming setting values

CH1 data display

Hold down

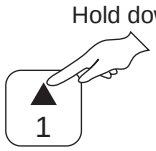

CH2 data display

Hold down

By pressing each key during pressure display, the switch data ON setting/OFF setting/ operation waveform, zero point adjustment value, pressure range, and output can be confirmed. Switch operation is not affected during the following operations.

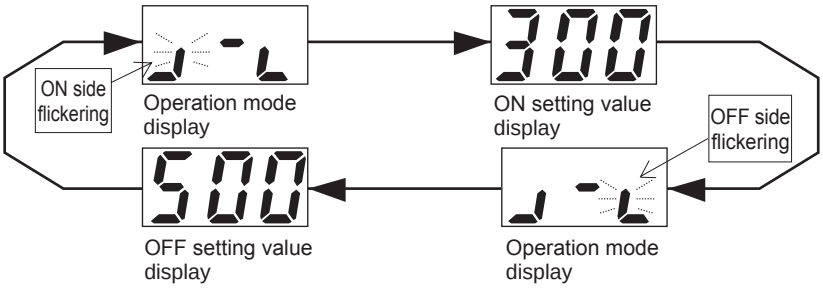

Zero point adjustment value/model No. display

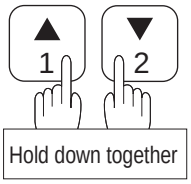

The zero point adjustment value and model number are alternately displayed. The switch operation is not affected during this operation.

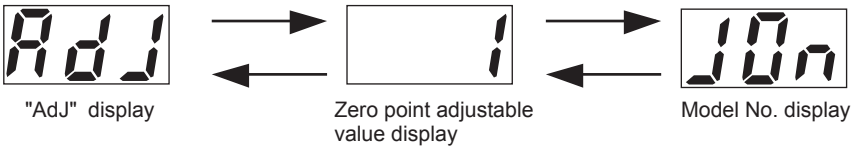

Using each function

Peak hold function

The pressure value for a set period is displayed to see the max. and min. values.
Use this to check the stability of main pressure and working pressure etc. Peak holding does not affect this product's basic functions such as switch operations or pressure display.

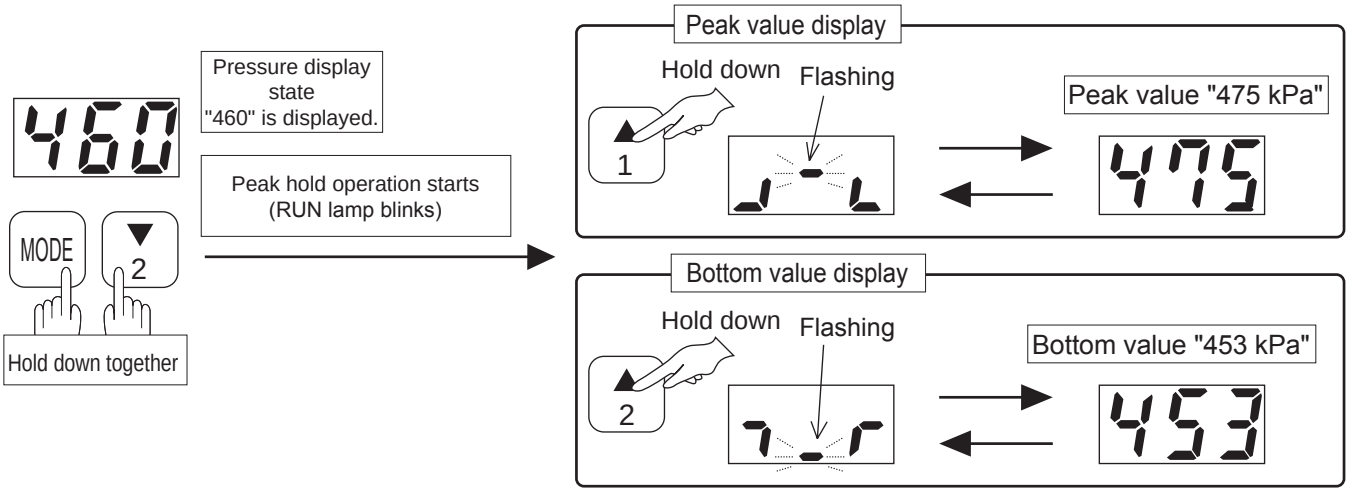

Switch output function

Refer to following page for operation method.

The PPD3-S has a 2-point or 1-point switch output, and operates in 4 operation modes and stopping operation.
The switch is started by setting the required operation mode (refer to the switch operation mode in page 1017) and by making two settings, ON and OFF, that specify the operation pressure.
Determine the required operation mode and ON and OFF setting values before making settings.
Select and set the following data to operate the switch.

CH1: operation mode	CH1: ON setting value	CH1: OFF setting value
CH2: operation mode	CH2: ON setting value	CH2: OFF setting value

(There is no CH2 when an analog output is provided. Nothing can be output even if set)

Switch output test function

Refer to following page for operation method.

Use this function to forcibly turn the switch output ON and confirm the wiring connection or initial operation of the input device.

Note 1: Use this test function to check the wiring connection and input device operation. Avoid using this function instead of actual signals when executing the sequence program while the machinery and equipment are operating. (Refer to Precautions of caution "During use & maintenance" on page 1044.)

Zero point adjustment function

Refer to following page for operation method.

Deviation of the display from the zero point is compensated in the atmospheric pressure pressurized state.

Note 2: The above settings and test greatly affect the output signal and display. Before this operation, stop the machinery and equipment that use this product and confirm that safety can be ensured in case of problems or incorrect display. Using this function while the machinery and equipment are operating could cause problems or incorrect display.
Note 3: To avoid incorrect operation, all keys must be held down for a set time to select the mode.

Operation chart for switch output function/forced output function/zero point adjustment function

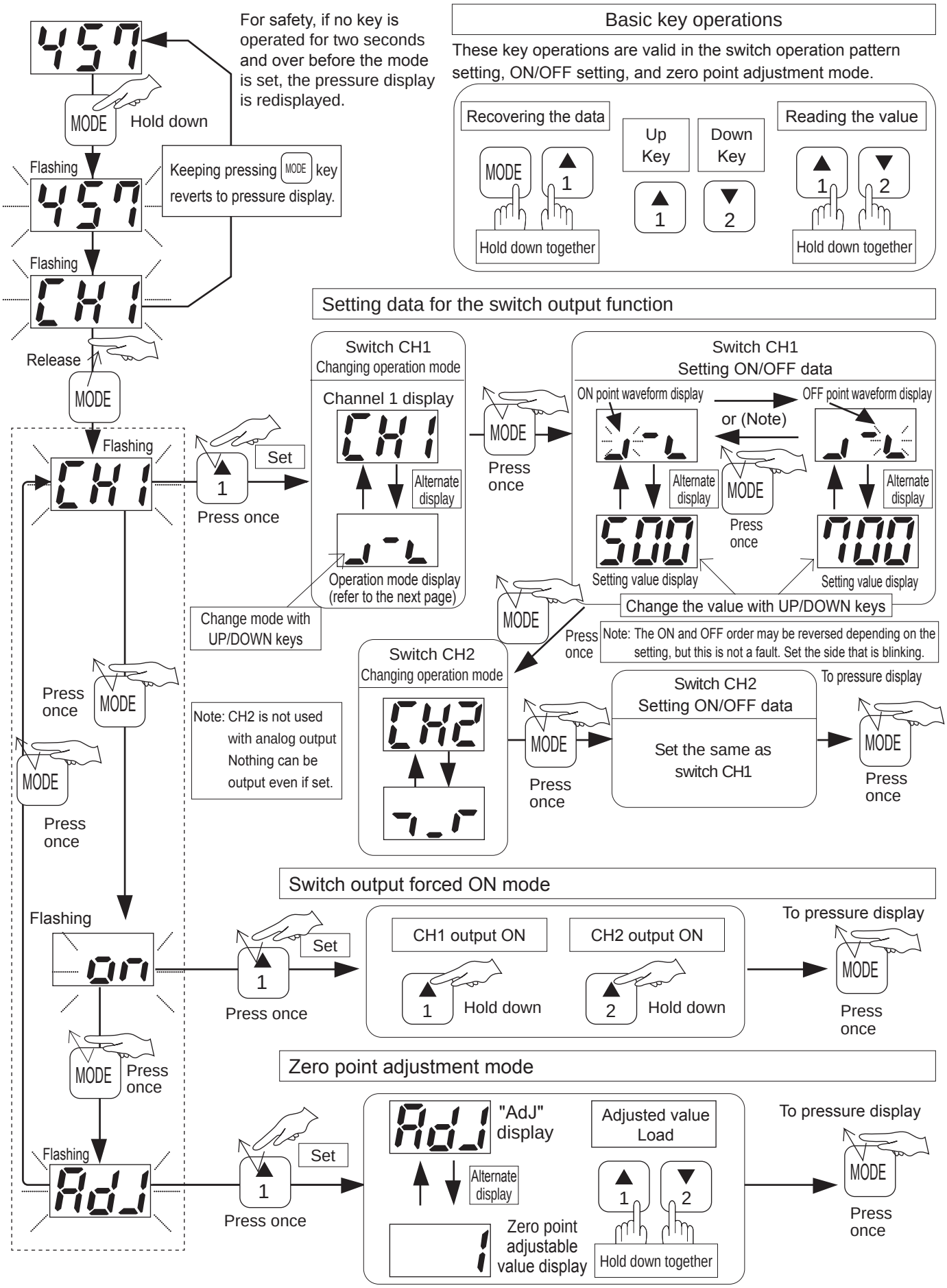

Basic key operations

These key operations are valid in the switch operation pattern setting, ON/OFF setting, and zero point adjustment mode.

Recovering the data: MODE + ▲1 — Hold down together

Up Key: ▲1

Down Key: ▼2

Reading the value: ▲1 + ▼2 — Hold down together

Setting data for the switch output function

Switch output forced ON mode

Zero point adjustment mode

Switch operation mode

Operation mode name	Operation waveform	LED operation waveform display	Examples
1 Window operation 1 (ON when inside range)	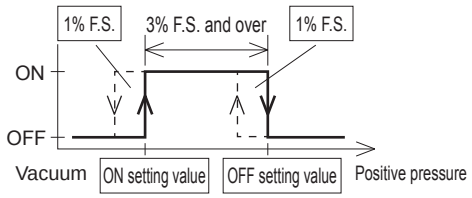		When used to confirm main pressure, the ON signal is output as the normal signal if main pressure is within the appropriate range.
2 Window operation 2 (ON when outside range)	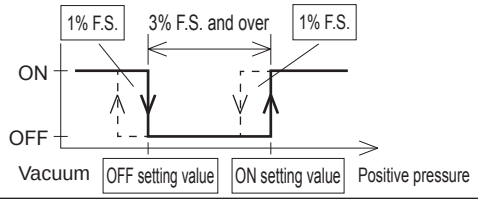	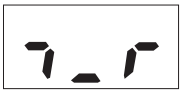	When used to confirm main pressure, the ON signal is output as the error signal if main pressure is abnormal.
3 Hysteresis operation 1 (ON at low pressure)	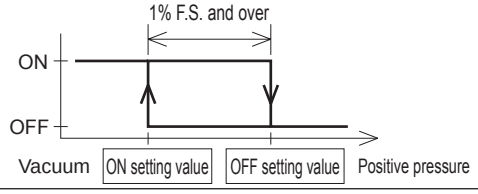		When used to confirm suction, the ON signal is output if the workpiece is suctioned and suction pressure has sufficiently dropped (vacuum).
4 Hysteresis operation 2 (ON at high pressure)	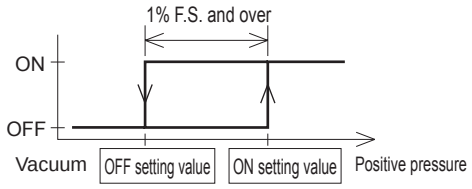		When used to confirm contact, the ON signal is output if the workpiece is held and pressure is sufficiently increased.
5 Operation stop	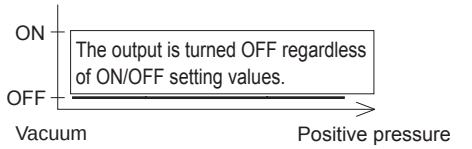	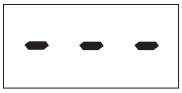	When not using the switch output, stop operation to prevent damage and accidents.

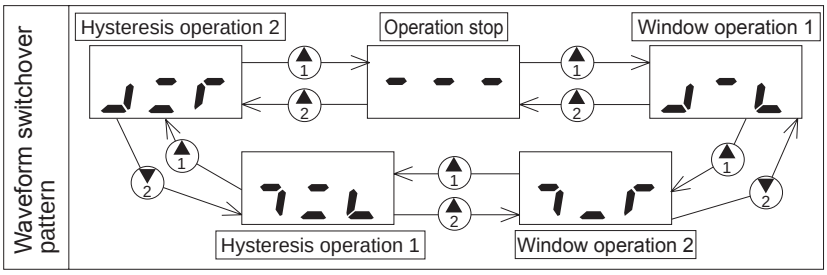

Note 1: When using for a winding operation, provide an interval of 3% F.S. and over between the 2 set values. A 1% F.S. hysteresis is automatically added to the ON side and OFF side.

Note 2: When using for a hysteresis operation, provide an interval of 1% F.S. and over between the 2 set values. If the two settings are the same, operation may not take place or may be unstable.

Note 3: The left face of the operation waveform indicates negative pressure, and the right side indicates positive pressure.

Note 4: The magnitude relation of the ON set value and OFF set value is determined when the operation mode is determined, and a reverse magnitude relation cannot be attained. As this product gives priority to the specified operation mode, it automatically judges the magnitude relation of two setting values when they are input and assigns them as ON and OFF setting values accordingly. Thus, even if ON and OFF setting values are input the other way by mistake, they will be corrected and the specified operation mode will be performed.

Safety Precautions

Always read this section before use.

Design & selection

WARNING

■ Use this product in accordance with the specifications.
- Use for applications, or at load currents, voltages, temperatures, impacts or sites excluded from the specifications could result in damage or malfunctions.

■ Do not use oxygen, corrosive or combustible gas, or toxic fluid for this product.

■ Do not use this product in explosive atmosphere.
- The pressure switch is not explosion proof. Never use in an explosive gas atmosphere as explosions or fires could result.

■ Avoid installing this product in a sealed control box or indoors.
- If the fluid should leak due to any trouble, the pressure in the sealed chamber could change and create a hazardous state. Use this product in the control box having safety device to control internal pressure, or indoors with no pressure differential from the outside.

■ Power supply voltage
Use the product within the specified power supply voltage. The product could rupture or burn if voltage exceeding the working range is applied or if an AC power supply (100 VAC) is applied.

■ Load short circuit
Do not short-circuit the load. Failure to observe this could result in rupture or burning.

■ Incorrect wiring
Avoid incorrect wiring such as wrong polarity of power source, etc. Failure to observe this could result in rupture or burning.

CAUTION

■ Applicable fluid
When using applicable fluid other than air; nitrogen gas, etc., oxygen deficiency could be caused. Observe the following instructions.
- Use this product in well ventilated locations.
- Ventilate the work area when nitrogen gas is being used.
- Inspect piping regularly, so nitrogen gas piping does not leak.
- Non-corrosive gas means substances such as nitrogen or carbon dioxide contained in air and inert gases such as argon or neon.
- When using this product for compressed air containing water or oil, use PPD3-S (stainless steel diaphragm sensor specifications) with increased corrosion resistance.

■ If this product is used for vacuum suction confirmation, care must be taken for following matters.
- When applying positive pressure for vacuum break onto the product, check that it does not exceed the specified proof pressure.

■ Working environment
- Avoid using this product where vibration or impact exceeding 100 m/s^2 could be applied.
- Check the temperature of fluid being measured and the environmental temperature in piping.
- When using a type that does not have the corresponding degree of protection, do not use where it may come into contact with water or oil.

■ Determine the setting taking error caused by accuracy and temperature characteristics into consideration.

■ Take care when using this product for an interlock circuit.
- When using the pressure switch for an interlock signal required high reliability, provide a double interlock by installing a mechanical protection function or a switch (sensor) other than a pressure switch as a safeguard against failure.
  Regularly inspect and confirm that the interlock activates correctly.

(Recommended values)

Model No.	Degree of protection
PPD3-D	IP40
PPE (-A)/PPD3-S	IP65

■ Response time is affected by working pressure and load volume. If reproducibility with stable response time is required, install a regulator in the proceeding stage.

■ Take the following countermeasures to prevent malfunction caused by noise.
- Install a line filter in the AC power supply line.
- Do not share power with components such as an inverter, motor, etc., that cause noise.
- Use a surge suppressor, such as CR or diode on the inductive load (solenoid valve, relay, etc.) and remove noise when generated.
- When using a device such as a switching regulator or inverter motor that could generate noise near the sensor, be sure to ground the device frame ground (F.G.) terminal.
- Separate wiring to the device of proportional control by electrical signal from strong magnetic fields.
- Connect wiring to device of proportional control by electrical signal with a shield wire.
- Ground the shield wire on the power supply side.

■ When releasing secondary control pressure, such as an air blowing, to the atmosphere, pressure could fluctuate depending on piping conditions and flow conditions. Test the product under actual working conditions, or contact CKD before using this method.

■ When selecting dryer, air filter, oil mist filter or regulator, select a device with a flow rate higher than that used by device of proportional control by electrical signal.

■ CE-compliance working conditions
The standard for the immunity for industrial environments applied to CE conforming product is EN61000-6-2, but the following requirements must be satisfied in order to conform to this standard.
Conditions
- The assessment of this product is performed by using a cable pairing a power supply line and a signal line, treating this cable as a signal line.
- This product is not equipped with surge immunity. Implement surge protection measures on the system side.

Mounting / Installation / adjustment

⚠ WARNING

■ Avoid incorrect connection.
- ● An incorrect connection may cause a fatal error not only to this product but also peripheral devices.

■ DC power not insulated from AC primary side may damage the product and power supply, so an electric shock could occur. Do not use the product in this case.

⚠ CAUTION

■ Do not use the product where the product is exposed to direct sunlight or may come in contact with water or oil.

■ Flush air pipe connected to device of proportional control by electrical signal before connecting. Prevent pipe from catching tips of sealing tape when piping.

■ Correct pressure control is not possible if the exhaust port is plugged. Release this port into the atmosphere.

■ Use proper torque to tighten the pipes when connecting them.
- ● To prevent air leak and to protect threads from damage.
- ● First tighten the screw by hand to prevent damage to screw threads, then use a tool.

Port thread	Tightening torque N·m
M3	0.3 to 0.6
M5	1 to 1.5
Rc1/8	3 to 5
Rc1/8 (resin)	1 to 1.5

■ Care must be taken for protection of body and lead wire.
- ● Do not bump or drop the main unit, or apply excessive bending or tensile force to the lead wire because the lead could be disconnected.
- ● Connect and wire bending-resistant material, such as robot wire material, for the movable sections.

■ Wiring
- ● Turn the power OFF before wiring this product. Discharge static electricity from personnel or tools before and during work.
- ● Use a stabilized noise-free power supply with a ripple rate of 1% or less.

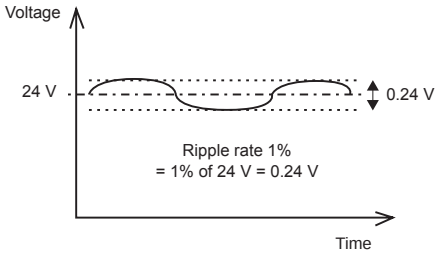

- ● Turn the power ON and OFF at the quick rising and falling edges of voltage.
  If the rated voltage is not reached, the sensor could malfunction. In some cases, the sensor could not recover after the rated voltage is reached. Reset the power in that case. Even if the rated voltage drops temporarily, shout down the power once, then turn ON the power again. If the power-supply voltage drops below the rated voltage even temporarily,
- ● Install the product and wiring as far away as possible from noise source such as a strong electric line. Take separate measures against surge generated from inductive loads that enters the power wire.
- ● Do not start the control unit, machinery and equipment immediately after wiring. Unpredicted signals could be output due to inadvertently set values. Conduct an energized test with controls and machine devices stopped, and set target switch data.

■ Stop the machinery and equipment and confirm safety before setting switch outputs.

■ Operate the keys with fingertips. Sharp instruments, such as knife or screwdriver, contacting a plastic film on the operation section could damage the film and compromise its protective functions.

■ Open the package in a clean room.
- ● The products are wrapped in an antistatic sheet before packaged in a box. If you install the product in a clean room, we recommend you to take it out of the box outside the clean room before you bring it in and to unwrap in the clean room.

■ Piping work
- ● For the push-in fitting, use the recommended tube, and perform piping work to the push-in fitting assembly after the brushing.
  * Recommended tube: Conforming tube O. D. 6 mm manufactured by CKD F-1506, U-9506 and others.
- ● For the screw-in fitting, wind sealing tape or apply a sealant, and screw in without tightening excessively. Apply a wrench to the metal section when tightening. (resin section only for PPE, PPD3-R*A-6)
- ● Wrap sealing tape from threads starting 2 mm inside from the end of piping threads.
  * If sealing tape protrudes from pipe threads, it could be cut when screwed in. This could cause the tape to enter the component and lead to faults.

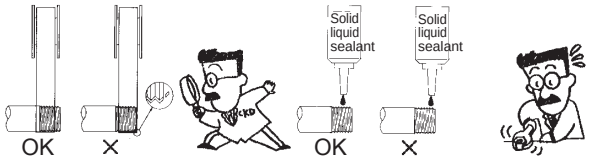

- ● Make the pipe length of approx. 1 m, and take caution not to apply tensile force or impact on the piping. For the longer tube, by its own weight and vibration/impact, unexpected tensile strength is produced. In order not to apply a weight, fix and relay the tube to the machine device in the middle of the piping.

■ Avoid connecting the output for a relay contact, operation switch, or other component output in parallel with the PLC to the product's output, or short-circuiting the input terminal of the PLC to which this product is connected with the power supply cable's minus side to test the input device. This product's output circuit could be damaged.

Mounting / Installation / adjustment

⚠ CAUTION

■ Some models have a push-in fitting for the measured pressure port. Check the perpendicularity of the tube side, and check that there are no scratches, indents, or dirt near the end. Air and compressed air are measured. Check that water and dirt do not enter the tube during piping.

During use & maintenance

⚠ WARNING

■ Do not apply overcurrent.

● If overcurrent flows to the pressure switch due to a load short-circuit, etc., the pressure switch will be damaged and could also ignite. Provide an overcurrent protection circuit, such as a fuse, for the output wire and power cable as needed.

⚠ CAUTION

■ Do not disassemble the products.

● The product could be damaged or its performance compromised if it is disassembled. CKD does not guarantee performance after disassembly. Remove the entire installation section (pressurized port section) when replacing or moving the product.

■ Stop machinery and equipment, then check the safety before operating the product.

■ With PPD3-S, pressure is detected 200 times per second, but this display is updated 4 times a second, and cannot track fast pressure changes. The switch could therefore start operating at quickly changing pressure even when the display does not indicate the switch setting.

■ The case is made of resin. Do not use solvent, alcohol or detergent in cleaning, or resin could absorb it. There is a risk of affecting the resin. Wipe off dirt with a rag soaked in a diluted neutral detergent solution and wrung out well.

■ Pay attention to reverse currents caused by disconnected wires and wiring resistance.
When other devices, including pressure switches, are connected to the same power supply as the pressure switch, and the output cable and power cable's minus side are short-circuited or the power supply's minus side is disconnected to check operation of the input device from the control panel, reverse current could flow to the pressure switch's output circuit and cause damage.

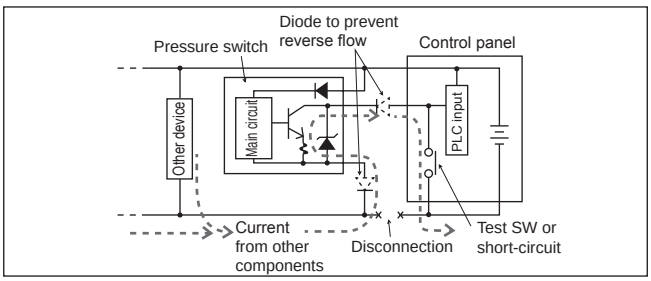

Take countermeasures as followings to prevent damages caused by reverse current.

(1) Avoid centralizing current at the power cable, especially the minus side power cable, and use as thick a cable as possible.
(2) Limit the number of devices connected to the same power supply as the pressure switch.
(3) Insert a diode in series with the pressure switch's output cable to prevent reversal of current.
(4) Insert a diode in serial with the pressure switch's power cable minus side to prevent reversal of current.

■ Care must be taken for surge current flow-round.
When the power is shared with inductive loads that create surge current such as pressure switches, solenoid valves or relays, if the circuit is closed with inductive loads activated, surge current could lead to the output circuit, causing damages. When the pressure switch power is shared with an inductive load that generates surges, such as a solenoid valve or relay, if the circuit is cut off while the inductive load is functioning, surge current could enter the output circuit and cause damage depending on where the surge absorbing element is installed.

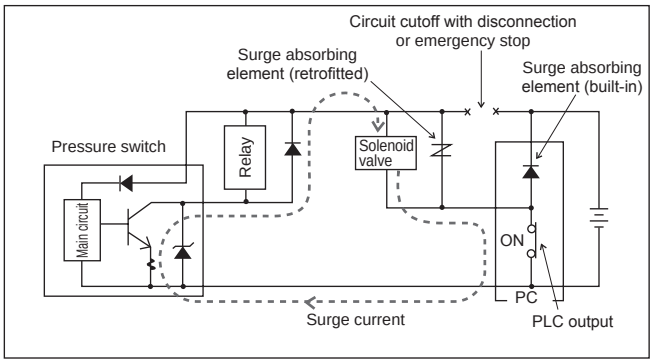

Take the following countermeasures as followings to prevent damages caused by reverse current.

(1) Separate the power supply for the output system comprising the inductive load, such as the solenoid valve and relay, and the input system, such as the pressure switch.
(2) If separate power supplies cannot be used, directly install a surge absorption element for all inductive loads. Remember that the surge absorbing element connected to the PLC, etc. protects only that device.
(3) Connect a surge absorption element to the following places on the power wiring as shown below as a measure against disconnections in unspecific areas.

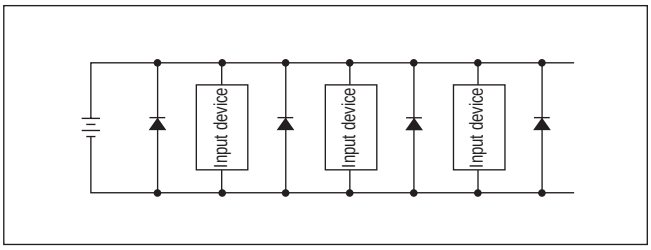

When the devices are connected to a connector, the output circuit could be damaged by the above phenomenon if the connector is disconnected while the power is ON. Turn the power OFF before connecting or disconnecting the connector.

Electronic pressure switch PPE Series

Design & selection

⚠ WARNING

■ Check the internal drop voltage.

- When using with a voltage less than specified voltage, the pressure switch may be activated correctly, but the load may not function correctly. Check the load's working voltage, and check that the following expression is satisfied:
  Power supply voltage – internal voltage drop > load working voltage

■ Care must be taken for leakage current.

- Even when the 2-wire pressure switch is OFF, current (leakage current) flows to operate the internal circuit (1 mA or less).
  Load working current > leakage current
  If the above expression is not satisfied, the switch may be interpreted as ON even when it is OFF, and operation fail. Use the 3-wire PPD if specifications are not met. If n units are connected in parallel, the current that flows to the load increases n-fold.

Mounting / Installation / adjustment

⚠ CAUTION

■ Handling the product

- When installing the product, hold the body section so that impact is not applied to the body or excessive stress is not applied to the lead wire.
- Do not disassemble or dismantle the product. The product could be damaged or its performance compromised if it is disassembled. CKD does not guarantee performance after disassembly.

■ Load short circuit protection circuit

- If the load is inadvertently short-circuited, the internal load short-circuit protection circuit is activated and the switch remains OFF. Fix wiring, then turn power OFF, or short-circuit the PPE's brown and blue lines to recover normal switch operations.

■ The main body and fitting connection rotate, but this section should not repeatedly rotate during use.

■ The degree of protection is equivalent to IP65, and this product must not be used in an environment where it could come in contact with water above the protective level specified in IP65. Check that cutting oil and coolant do not come in contact.

[Cautions on installation]

■ Driver

Use a flat head screwdriver corresponding to the trimer groove (0.5 W × 2.3 L × 0.5 D) or a cross-point screwdriver for 1 bit to set the trimmer.

■ Trimmer

The rotation range of the trimmer is 240 degree. The trimmer could be damaged if turned any further or if turned forcibly.

■ Opening and closing the trimmer cover

Use a flat head screwdriver to open the trimmer cover and set the trimmer. After setting, press the trimmer cover with a finger and completely close it. The degree of protection (IP65) is not satisfied if the cover is not completely closed.

Setting pressure and switch operations

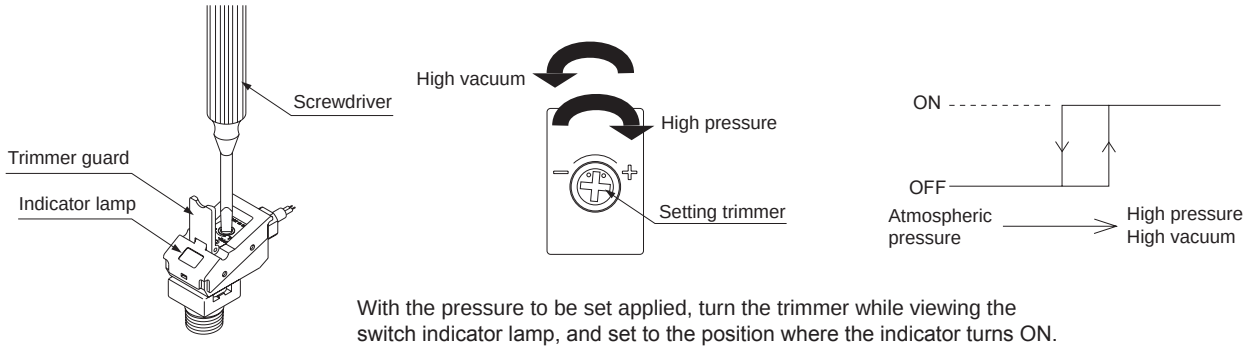

With the pressure to be set applied, turn the trimmer while viewing the switch indicator lamp, and set to the position where the indicator turns ON.

Connection

PPE-□-6	PPE-□-H6-B	PPE-□-H6
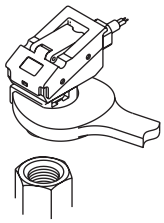	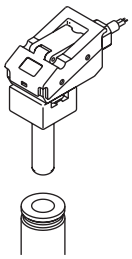	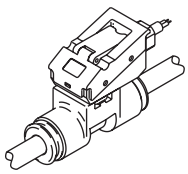
Use sealing tape or sealant, and catch a wrench against the square section (13 mm) of the R1/8 fitting to install. (Precautions) • The tightening torque is 1.0 to 1.5 N·m or less. Resin parts may be damaged if tightened too far.	Insert the CKD 6 mm tube push-in fitting and use. (Precautions) • Securely insert the plug section, and check that the plug is not dislocated. If the plug is not fully inserted, it could be dislocated or air could leak. • Use the applicable push-in fitting. GW Series GWJ Series	Insert the 6 mm tube into the two push-in fittings. (Precautions) • Use the designated tube and plastic plug. Tube outer diameter precision Nylon, soft nylon tube : Within ±0.1 mm Polyurethane tube : Within +0.1 mm Urethane tube : Within -0.2 mm and with hardness of 93° and over. • Securely insert the tube to the tube end, and make sure that the tube cannot be pulled off. If the tube is not fully inserted, it could be dislocated or air could leak. • Cut the tube with a dedicated cutter, and cut at a right angle.

SCPD3
SCM
SSD2
MDC2
SMG
LCM
LCR
LCG
LCX
STM
STG
STR2
MRL2
GRC
Cylinder switch
MN3E MN4E
4GA/B
M4GA/B
MN4GA/B
F.R (module unit)
Clean F.R
Precision R
Press gauge Diff. press gauge
Electro-pneumatic R
Speed controller
Auxiliary valve
Fitting/ tube
Clean air unit
Pressure sensor
Flow rate sensor
Valve for air blow
Ending

Electronic pressure sensor analog output PPE-□A Series

Design & selection

⚠ WARNING

■ Wiring
Turn the power OFF before wiring this product. Discharge static electricity charged in human body, tool or equipment before and during operation.
Connect and wire bending-resistant material, such as robot wire material, for the movable sections.

■ Installation
Install this product and wiring as far as possible from noise source such as a strong electric line.
Take separate countermeasures against surge that enter the power wire.

■ Power supply voltage
Use the product within the specified power supply voltage. The product could rupture or burn if voltage exceeding the working range is applied or if an AC power supply (100 VAC) is applied.

■ Load short circuit
Do not short-circuit the load. Failure to observe this could result in rupture or burning.

■ Incorrect wiring
Avoid incorrect wiring such as wrong polarity of power source, etc. Failure to observe this could result in rupture or burning.

■ Connecting load
When connecting an inductive load such as relay or solenoid valve, a surge voltage is generated when the switch is turned OFF. Directly connect a diode onto all inductive loads in the same power circuit.

■ Connecting load
The output impedance of the analog output section is 1 kΩ. If the impedance of the connecting load is small, output error increases. Check error with the impedance of the connecting load before using.

Example of calculation

(PPE-□A output impedance: Ro = 1 kΩ
Load internal impedance: Rx = 1 MΩ

$$\text{Output value} = \left(1 - \frac{Ro}{Ro + Rx}\right) \times 100\%$$

$$= \left(1 - \frac{1\ k\Omega}{1\ k\Omega + 1\ M\Omega}\right) \times 100\% \Rightarrow \text{Error in the output value approx. 0.1\%}$$

Mounting / Installation / adjustment

⚠ CAUTION

■ When installing the product, hold the body section so that impact is not applied to the body or excessive stress is not applied to the lead wire.

■ When applying positive pressure for vacuum break onto the product to check vacuum suction, check that it does not exceed the specified proof pressure.

■ Do not disassemble or dismantle the product. The product could be damaged or its performance compromised if it is disassembled.
CKD does not guarantee performance after disassembly.

■ The main body and fitting connection rotate, but this section should not repeatedly rotate during use.

■ The degree of protection is equivalent to IP65, and this product must not be used in an environment where it could come in contact with water above the protective level specified in IP65. Check that cutting oil and coolant do not come in contact.

[Connection]

PPE-□A-6	PPE-□A-H6-B	PPE-□A-H6
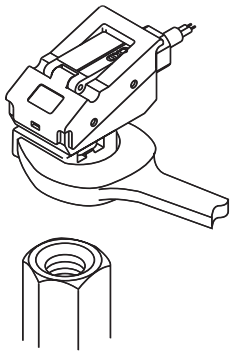	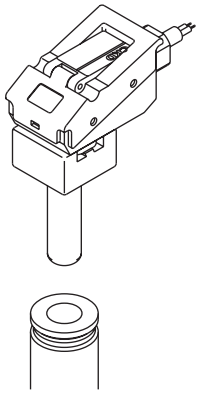	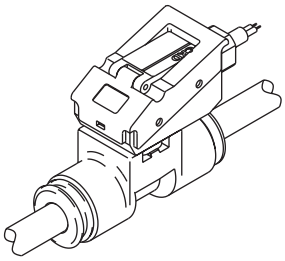
Use sealing tape or sealant, and catch a wrench against the square section (13 mm) of the R1/8 fitting to install. (Precautions) • The tightening torque is 1.0 to 1.5 N·m or less. Resin parts may be damaged if tightened too far.	Insert the CKD 6 mm tube push-in fitting and use. (Precautions) • Securely insert the plug section, and check that the plug is not dislocated. If the plug is not fully inserted, it could be dislocated or air could leak. • Use the applicable push-in fitting. GW Series GWJ Series	Insert the 6 mm tube into the two push-in fittings. (Precautions) • Use the designated tube and plastic plug. Tube outer diameter precision Nylon, soft nylon tube : Within ±0.1 mm Polyurethane tube : Within +0.1 mm Urethane tube : Within -0.2 mm and with hardness of 93° and over. • Securely insert the tube to the tube end, and make sure that the tube cannot be pulled off. If the tube is not fully inserted, it could be dislocated or air could leak. • Cut the tube with a dedicated cutter, and cut at a right angle.

Electronic pressure switch PPD3-S

Design & selection

⚠CAUTION

■ This product self-diagnoses the internal circuit immediately after power is turned ON, so pressure is not detected immediately. Set the control circuit so signals are ignored for 2 seconds after power is turned ON.

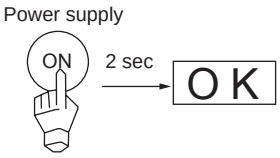

■ This product's overcurrent protection turns the output OFF when an overcurrent is detected. However, the output is repeatedly turned ON for a short time at a set cycle. This causes power supply voltage to fluctuate and may adversely affect peripheral devices.

■ When using this product for compressed air containing water or oil, use PPD3-S (stainless steel diaphragm sensor specifications) with increased corrosion resistance.

[Analog output voltage waveform]

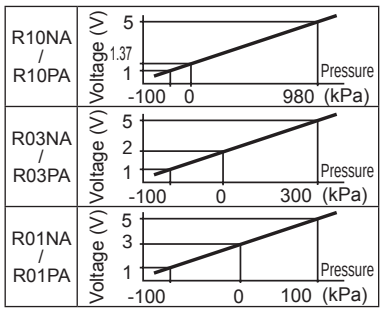

■ Install PPD3-S on a frame or panel connected to the frame ground F.G., and if necessary, directly connect from PPD3-S port to F.G. When leading fluids in from an external device, connect via a relay fitting connected to F.G. (To provide safety when using conductive fluids)

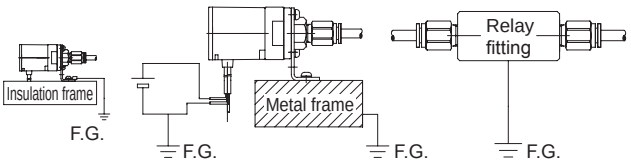

■ PPD3-S power supply is a DC stabilized power supply completely isolated from the AC primary side. Connect either the + side or - face of the power to the F.G. A variable resistor (voltage limit 40 V) is connected between the internal power circuit and port installation section of this PPD3-S to prevent dielectric breakdown of the sensor. Do not conduct withstand voltage or insulation resistance tests between the PPD3-S's internal power supply circuit and port installation section. Disconnect the PPD3-S wiring if this kind of test must be done. An excessive potential difference between the PPD3-S power supply and port installation section could burn internal parts.
After installing, connecting, and wiring the PPD3-S, electrical welding of the device or frame, or short-circuit accidents, etc., could cause welding current, excessive high voltage caused by welding, or surge voltage, etc, to run through the wiring, ground wire, or fluid path connected between the above devices. This could damage wires or devices.
Conduct any work such as electrical welding after removing this device and disconnecting all electric wires connected to the F.G.

■ Care must be taken for entry of water and drain.
PPD3-S has a stainless steel diaphragm pressure sensor that cannot be damaged by water. However, when vacuum is broken after checking vacuum suction, drainage in the water and air could collide with the pressure sensor. The **water's inertia** could damage the pressure sensor and prevent the correct pressure from being indicated.
If water or drainage could enter, connect a thin pipe to the PPD3-S, or install an orifice midway.
Take special care when using the back ports on PPD3-S 6B port.
In addition, this has a ø1 built-in orifice inside the pressure port.

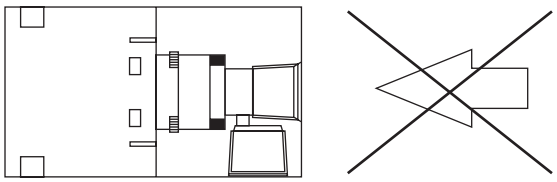

Take special care when using the back ports on the 6B if water of drainage could enter.

Mounting / Installation / adjustment

⚠ CAUTION

■ Check the pressure range.
If the pressure switch for low pressure range is incorrectly used for high pressure applications, this product could be ruptured or damaged, and a large amount of air could leak, posing a hazard.

High pressure | P10 > P01 > V01 / R10 > R03 > R01 | Vacuum

■ Switch data can be set to values that exceed the rating range, or to unrealistic values, but operation and accuracy at such values are not guaranteed. Confirm that settings enable the target operation. Ensure the following difference between data A and B to stabilize operation:

Operation mode	Difference of min. digit
Hysteresis operation	1% F.S.
Window operation	3% F.S.

Do not set as follows (Data A = Data B / ON point = OFF point)

■ Avoid air blow
The high pressure near the nozzle could back flow and exceed the product proof pressure. This could result in rupture or damage. Lower the pressure of compressed air to less than the proof pressure, or shield the flow path when blowing air.

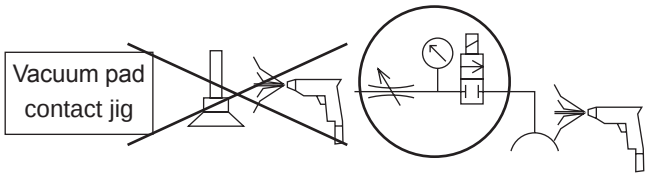

■ Remove humidity, dirt and contamination from the installation location. Select a flat installation surface. Any warp or bumps on the installation surface could damage the case or compromise protective functions. Excessive tightening of installation screws can result in similar damage.
- After installation, do not bump the case or use the case as step. Even if there is no apparent external damage, this remains as stress that gradually forms cracks and further damage.

■ Precautions for PPD3-S (sensor integrated) Series
- The product may be prone to damage when in a state of being unpacked or being installed. The protective functions are effective when the product is correctly installed, wired and piped. Provide protection so that water and other substances do not come in contact until installation is completed.
- Wire and pipe the product after fixing it at the installation site. Check surrounding safety and that water and other substances do not come in contact before starting wiring. Continue to provide protection after the product is connected. (The current could leak at the connection section, and water could run along the cable and enter the case.)
- The atmospheric introduction port for atmospheric pressure is treated as a key point in ensuring this product's protective performance. Use the following tube, and release the end into the atmosphere in a dry environment with no barometric pressure differences.
Recommended tube: Soft nylon tube model No. FH-3224
Urethane tube model No. U-9532, U-9504

[IMPORTANT] Never apply pressure to atmospheric inlet port.

■ If the atmospheric inlet port is pressurized, protective performance could be lost, and the case could rupture or pop off. Leave this port set at atmospheric pressure. Separate piping for atmospheric release port from other pressurized air piping by using different tube diameters or colors. Take sufficient countermeasures to prevent pressurized air from being applied.
- Even when protective performance is not required, if this product is installed in a humid environment with large temperature variation, dew condensation in the case is prevented by taking these measures. (Dew is fatal to the electric circuit.)
- Note that if this product is connected in a control panel, pressurized to a positive pressure or negative pressure within a dry environment, the pressure difference could affect indicator accuracy.
- This product is intended to protect from city water. Protection performance cannot be guaranteed for hot water, oil, coolant (nonwater soluble, water soluble), solvent, acid, alkaline, or chemicals, etc. These substances could cause solvent cracks to form on in the case's resin parts, the gasket to swell, the adhesive to melt and separate, and other problems. Note that if water that gets on the product freezes, the case could be damaged and protective performance could be lost. Please be careful.

■ The degree of protection is equivalent to IP65, and this product must not be used in an environment where it could come in contact with water above the protective level specified in IP65. Check that cutting oil and coolant do not come in contact.

During use & maintenance

⚠ CAUTION

■ This product has O-ring seals and threaded fittings. A slight amount of air leaks (1 cm^3/min. ANR or less) is tolerated.
When using applicable fluid other than air; nitrogen gas, etc., oxygen deficiency could be caused. Observe the following instructions.
- Use this product in well ventilated locations.
- Ventilate the work area when nitrogen gas is being used.
- Inspect piping regularly, so nitrogen gas piping does not leak.

■ Fluids that could corrode the gas contact area material (*1) or flammable, explosive, or toxic fluids could damage the sensor or main body. Do not use those fluids.

■ Confirm that fluid being measured does not freeze (resulting in expansion or contraction of volume), contents do not solidify and stick due to drying, solid contents do not form sediments or accumulate, accumulated fluid does not decompose and that the product is not clogged by dirt. When using inductive fluids, fluid staying in the middle of piping at low pressure ranges may cut off the pressure or cause negative pressure generation, preventing proper measurement. Fluids such as water or oil drainage could result in a water hammer caused by the fluid's inertial pressure, or a sudden pressure rise such as a surge pressure when the valve is turned ON and OFF, etc. Before installing, use a highly responsive pressure sensor and check that these do not exceed the proof pressure even instantly. Pressure exceeding the proof pressure could damage the sensor or body.

■ For safety, be sure to turn power OFF before connecting the sensor-separated sensor.

*1 Wetted section material

Model No.	Material
PPD3-S	SUS630, FKM, aluminum

Note: The fitting material is included for models with push-in fittings (PPD3-S-6HD, PPD3-S-6HT).

Fitting	NBR, brass (nickeling)

Compact Flow Rate Sensor

FSM3 (RAPIFLOW®)

Sensor controller Component/flow rate sensor

CONTENTS

Product introduction 1046
Examples 1048

● **Resin body**
LCD display 1052
Bar display 1060
IO-Link 1066

● **Stainless steel body**
LCD display 1072
Bar display 1080
IO-Link 1086

● **Separated display** **1092**

Technical data 1094
Operation mode 1108
Optional products 1114
● Dedicated inline filter 1116
⚠Safety precautions 1118

Diversified

Five types of gases can be measured with just one unit

Gas type switching function (LCD display, IO-Link) (full scale flow rate 200 L/min or less model)

Air, nitrogen, argon, carbon dioxide, gas mixture (mixture of Ar: CO2 (8:2)) supported with this single flow rate sensor.
Gas types can be switched by operating buttons on the body.
In the IO-Link specifications, the gas type can be changed remotely from a host controller.

* For details on mixing ratios, contact CKD.

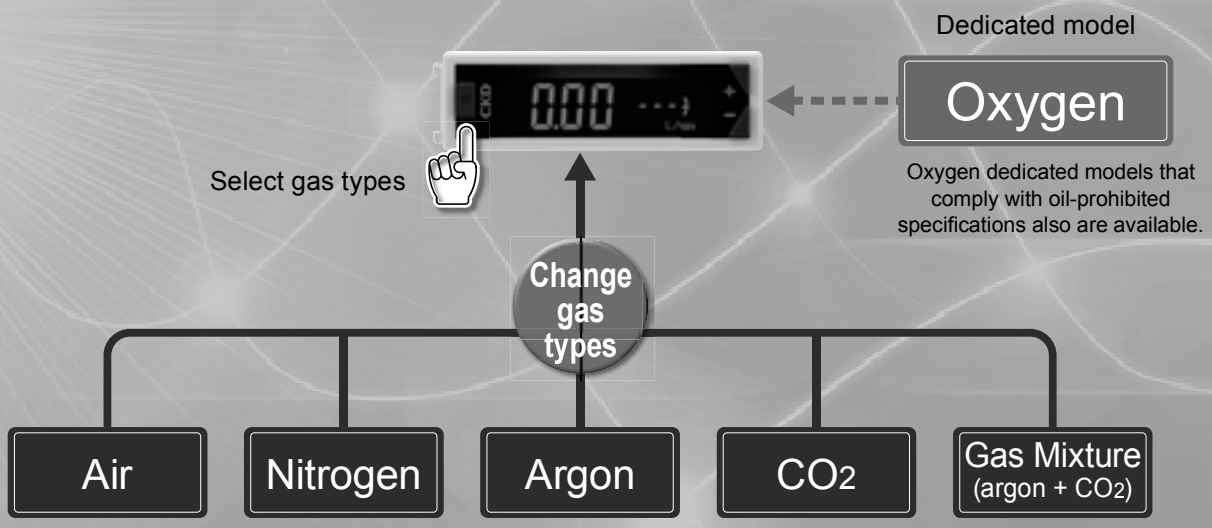

High performance

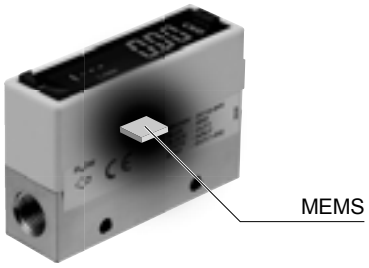

MEMS stands for Micro Electro Mechanical Systems or the technology of microscopic devices to which microprocessing technology, that is used in the manufacture of semiconductor, is applied.

Clean-room specifications

Anti-dust generation packaging (P70) and oil-prohibited specifications (P80) are included in the product lineup as standard

Sensors can be used selectively according to the grade of the apparatus.

Compatible with outgas

Stainless steel body does not use resin in the flow path, making it ideal for processes that are difficult to outgas.

High precision/high-speed response

Repeatability: Within ±1% F.S.
Display accuracy: Within ±3% F.S.
Response time: 50 msec

Reduced pressure loss

A re-designed flow path results in up to a 50% reduction

Bi-directional fluid measurement

Contributes to reducing tact time

The flow direction can be measured as desired.

Forward direction

Bi-direction

Reverse direction

IO-Link model now included in series

IO-Link is a digital communication specification for on-site sensors and actuators in plants. (IEC61131-9)
This enables the transmission of parameters and event data that could not be transmitted by analog communication.

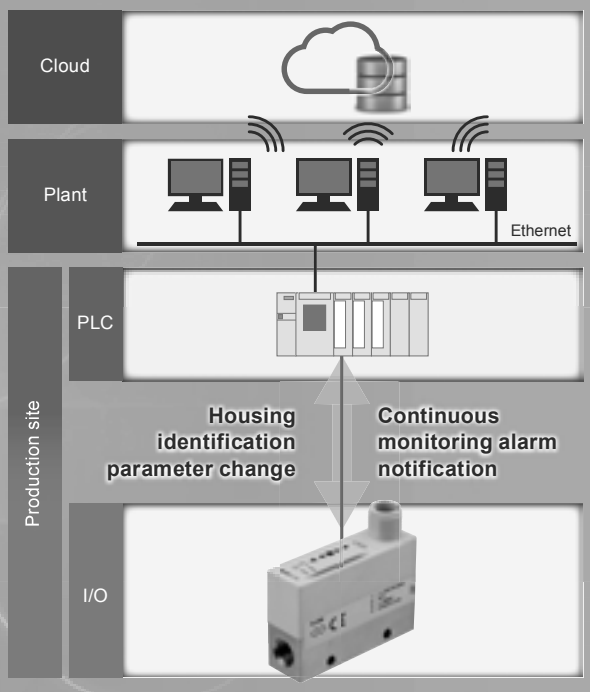

Features of IO-Link

Continuous monitoring is enabled by the use of digital data.

Parameters can be set or changed via a network, allowing apparatus to be remote-controlled.

The model No., serial No. or other unit-unique information can be confirmed on the network.

Settings can be copied from a master (scanner) unit. This frees the operator from the trouble of having to reset parameters during maintenance.

Device failures and disconnections can be confirmed.

It is possible to connect by changing to an Ethernet network, enabling the creation of an IoT system.

User-friendly

LCD can be rotated for ease of viewing

The display can be inverted.

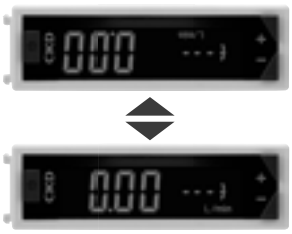

Easy mounting (option)

DIN rail mount

Panel mount

Wide selection of fittings

Resin body

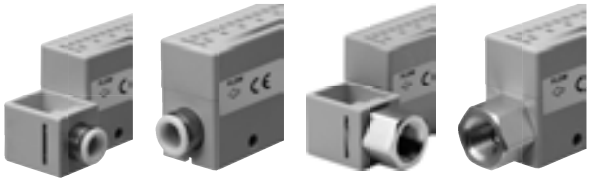

Push-in elbow | Push-in straight | Screw-in elbow | Screw-in straight

Stainless steel body

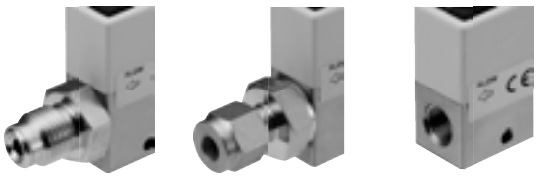

JXR barbed fitting | Double barbed fitting | Screw-in

Leakage inspection

The drinking water container is filled with gas to detect leaks.

Filter unit

Digital pressure sensor

2-port solenoid valve

Compact flow rate sensor

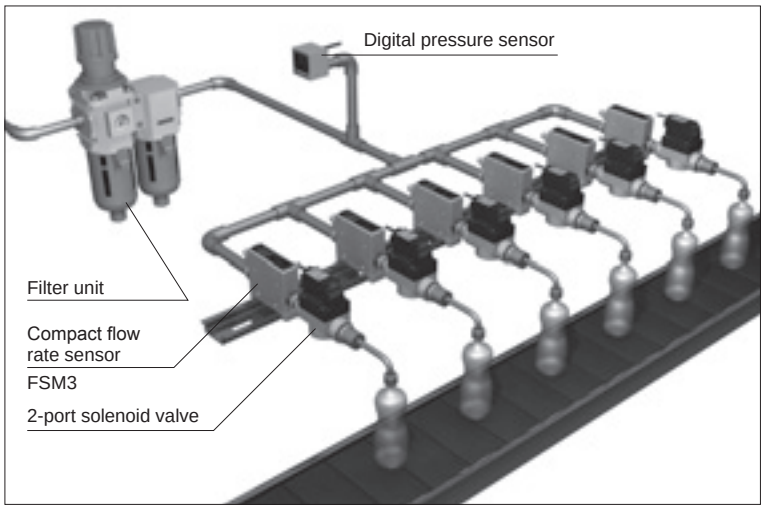

Air consumption management

The air consumption of facilities that use pneumatic devices is monitored.

Filter unit

Digital pressure sensor

Compact flow rate sensor

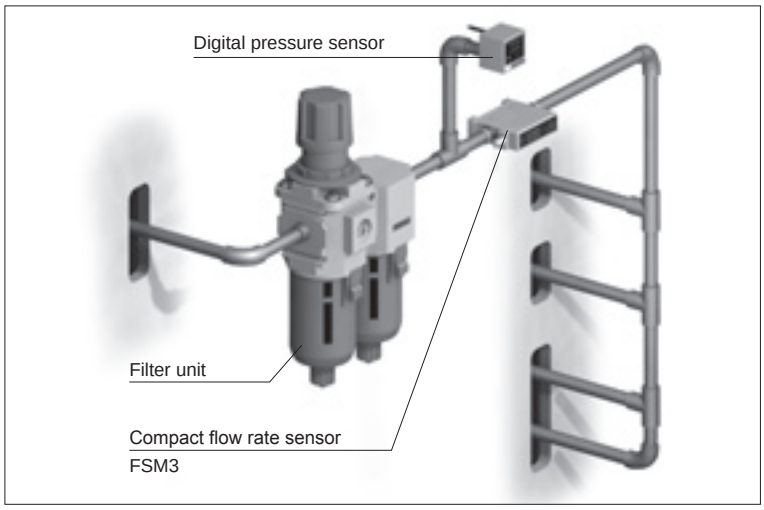

Painting air flow rate control

Change the air pressure and controls flow rate used during coating with the electro-pneumatic regulator.

Filter unit

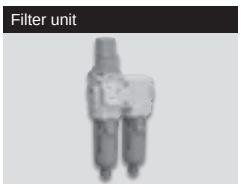

Electro pneumatic regulator

Compact flow rate sensor

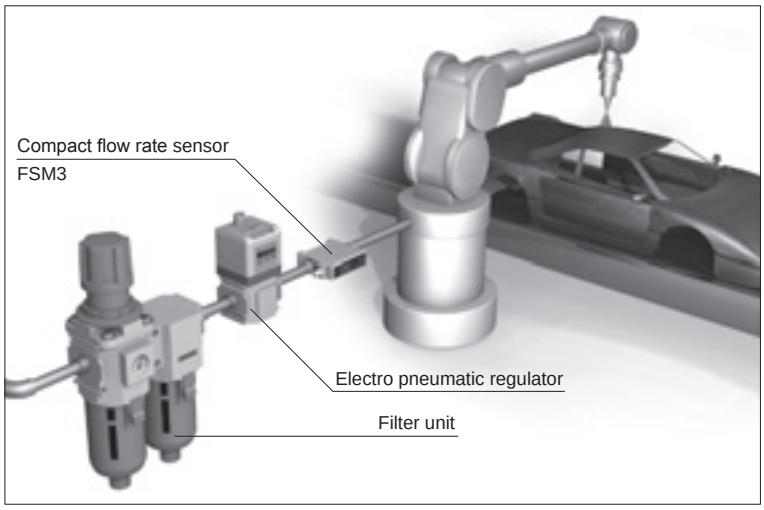

Biochemical culture apparatus

CO_2 flow rate is measured to promote the photosynthesis of organisms.

Inline clean filter

Digital pressure sensor

Compact flow rate sensor

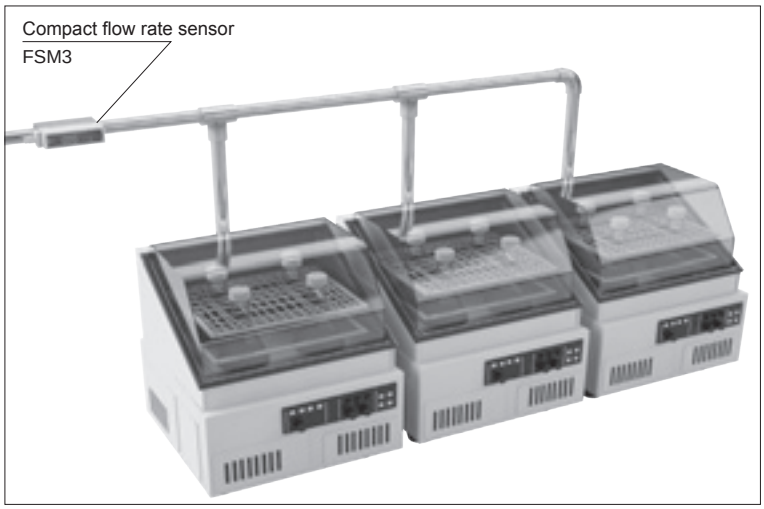

Arc welding

Manages argon, gas mixtures (argon + carbon dioxide), and other shielding gases.

Rotary clamp cylinder

Guided cylinder

Cylinder switch with connector

Compact flow rate sensor (IO-Link model)

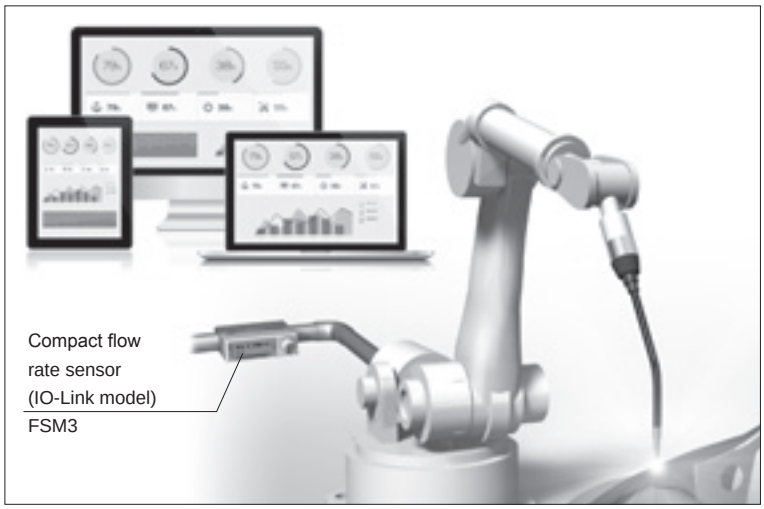

Electronic part installation

Control the tension of gold wire for installing electronic parts.

Inline clean filter

Digital pressure sensor

Compact flow rate sensor

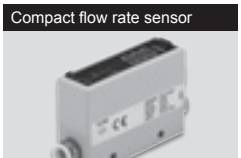

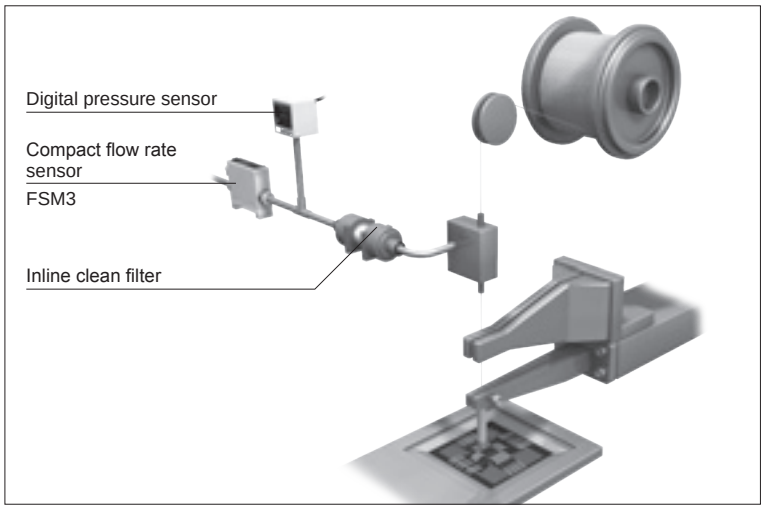

Series variation

Compact flow rate sensor (RAPIFLOW) FSM3 Series

	Appearance	Applicable fluid	Flow rate adjustment valve *1
Resin body	LCD display	Air Nitrogen Carbon dioxide Argon Gas mixture (argon + carbon dioxide)	●
			●
			●
			●
			●
			●
			●
			●
			●
			●
			●
			●
Stainless steel body	LCD display	(1) Air Nitrogen Carbon dioxide Argon Gas mixture (argon + carbon dioxide) (2) Oxygen	●
			●
			●
			●
			●
			●
			●
			●

*1: Compatible with LCD display
*2: Compatible with LCD display and bar display

Clean-room specifications		Port size	Max. flow rates (L/min)											Page
P70	P80		0.5	1	2	5	10	20	50	100	200	500	1000	
●	●	ø4	●	●	●	●	●	●						• LCD display Page 1052 • Bar display* Page 1060 • IO-Link Page 1066
●	●	ø6	●	●	●	●	●	●	●					
●		ø8							●	●	●			
●		ø10								●	●			
●		ø1/4"	●	●	●	●	●	●	●					
●		ø3/8"								●	●			
●	●	Rc1/8	●	●	●	●	●	●	●					
●	●	Rc1/4							●	●	●			
●	●	Rc1/2										●*	●*	
●	●	NPT1/8	●	●	●	●	●	●	●					
●	●	NPT1/4							●	●	●			
●	●	NPT1/2										●*	●*	
●	●	G1/8	●	●	●	●	●	●	●					
●	●	G1/4							●	●	●			
●	●	G1/2										●*	●*	
●	●	Rc1/8	●	●	●	●	●	●	●					• LCD display Page 1072 • Bar display* Page 1080 • IO-Link Page 1086
●	●	Rc1/4							●	●	●			
●	●	Rc1/2										●*	●*	
●	●	G1/8	●	●	●	●	●	●	●					
●	●	G1/4							●	●	●			
●	●	G1/2										●*	●*	
●	●	NPT1/8	●	●	●	●	●	●	●					
●	●	NPT1/4							●	●	●			
●	●	NPT1/2										●*	●*	
●	●	1/4" double barbed fitting	●	●	●	●	●	●	●	●	●			
●	●	1/4" JXR male fitting	●	●	●	●	●	●	●	●	●			

* The only applicable fluids are air and nitrogen.

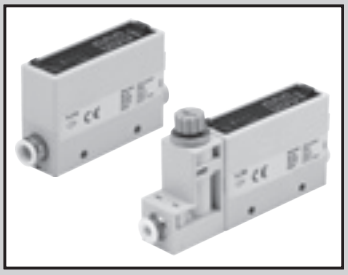

Compact flow rate sensor RAPIFLOW

FSM3 Series

LCD display

● Resin body (flow rate range: 500 mL/min to 1000 L/min)

LCD display specifications

Item			FSM3-[A][B][C][D][E][F][G][H][I]-[ ]										
			[B]										
			005	010	020	050	100	200	500	101	201	501	102
Flow direction	[C]	U	Uni-direction										
		B	Bi-direction										
Measurement flow rate range (□/min) *1	[B]	U	15 to 500 mL	30 to 1000 mL	0.06 to 2.00 L	0.15 to 5.00 L	0.30 to 10.00 L	0.6 to 20.0 L	1.5 to 50.0 L	3.0 to 100.0 L	6 to 200 L	15 to 500 L	30 to 1000 L
		B	−500 to −15, 15 to 500 mL	−1000 to −30, 30 to 1000 mL	−2.00 to −0.06, 0.06 to 2.00 L	−5.00 to −0.15, 0.15 to 5.00 L	−10.00 to −0.30, 0.30 to 10.00 L	−20.0 to −0.6, 0.6 to 20.0 L	−50.0 to −1.5, 1.5 to 50.0 L	−100.0 to −3.0, 3.0 to 100.0 L	−200 to −6, 6 to 200 L	−500 to −15, 15 to 500 L	−1000 to −30, 30 to 1000 L
Display			4 digit + 4 digit 2 color LCD										
Flow rate display range (□/min) *2	[B]	U	−49 to 549 mL	−99 to 1099 mL	−0.19 to 2.19 L	−0.49 to 5.49 L	−0.99 to 10.99 L	−1.9 to 21.9 L	−4.9 to 54.9 L	−9.9 to 109.9 L	−19 to 219 L	−49 to 549 L	−99 to 1099 L
		B	−549 to 549 mL	−1099 to 1099 mL	−2.19 to 2.19 L	−5.49 to 5.49 L	−10.99 to 10.99 L	−21.9 to 21.9 L	−54.9 to 54.9 L	−109.9 to 109.9 L	−219 to 219 L	−549 to 549 L	−1099 to 1099 L
Integration display *3		Display range	0 to ±9999999 mL		0.00 to ±99999.99 L			0.0 to ±999999.9 L			0 to ±9999999 L		
		Pulse output rate	5 mL	10 mL	0.02 L	0.05 L	0.1 L	0.2 L	0.5 L	1 L	2 L	5 L	10 L
Working conditions		Applicable fluid *4	Clean air (JIS B 8392-1:2012 1.1.1 to 5.6.2), compressed air (JIS B 8392-1:2012 1.1.1 to 1.6.2)										
			nitrogen, argon, carbon dioxide, gas mixture (argon + carbon dioxide)									-	
		Temperature range	0 to 50°C (no condensation)										
		Pressure range	−0.09 to 0.75 MPa										
		Proof pressure	1 MPa										
Operating ambient temperature/humidity			0 to 50 °C, 90% RH or less										
Storage temperature			−10 to 60°C										
Accuracy *5 (Fluid: in dry air)		Accuracy *6	Within ±3% F.S. (Secondary side released to atmosphere) (The scope of warranty is in accordance with the "measurement flow rate range.")										
		Repeatability *7	Within ±1% F.S. (Secondary side released to atmosphere)										
		Temperature characteristics	Within ±0.2% F.S./°C (15 to 35°C, base temperature 25°C)										
		Pressure characteristics	Within ±5% F.S. (where secondary side is released to atmosphere)								Within ±5% F.S. (0.35 MPa standard)		
Response time *8			50 msec or less (setting response time OFF)										
Switch output	[G]	A, B, E, F	NPN open collector output (50 mA or less, voltage drop 2.4 V or less)										
		C, D, G, H	PNP open collector output (50 mA or less, voltage drop 2.4 V or less)										
Analog output *9		A, B, C, D	1 to 5 V voltage output (connecting load impedance 50 kΩ or more)										
		E, F, G, H	4 to 20 mA current output (connecting load impedance 0 to 300 Ω)										
Power supply voltage *10		A, B, C, D	12 to 24 VDC (10.8 to 26.4 V) ripple rate 1% or less										
		E, F, G, H	24 VDC (21.6 to 26.4 V) ripple rate 1% or less										
Current consumption *11			45 mA or less										
Lead wire			ø3.7, AWG26 or equivalent × 5-conductor (connector), insulator O.D. ø1.0										
Functions *12			① Gas type selection, ② setting copy function, ③ flow rate integration, ④ peak hold, etc.										
Degree of protection			IP40 or equivalent (IEC standard)										
Protection circuit *13			Power reverse connection protection, switch output reverse connection protection, switch output load short-circuit protection										
Vibration resistance			10 to 150 Hz, 100 m/s^2, 2 hours each in X, Y, Z directions										
EMC Directive			EN55011, EN61000-6-2, EN61000-4-2/3/4/6/8										
Mounting		Mounting orientation *14	Unrestricted in vertical/horizontal direction										
		Straight piping section *15	Not required										

*1: The value converted to volumetric flow rate at standard condition (20°C, 1 barometric pressure (101 kPa), 65%RH). (20°C, 1 atmospheric pressure (101 kPa), 0%RH with a type of gas other than air.)

*2: Display at each flow rate is as follows.

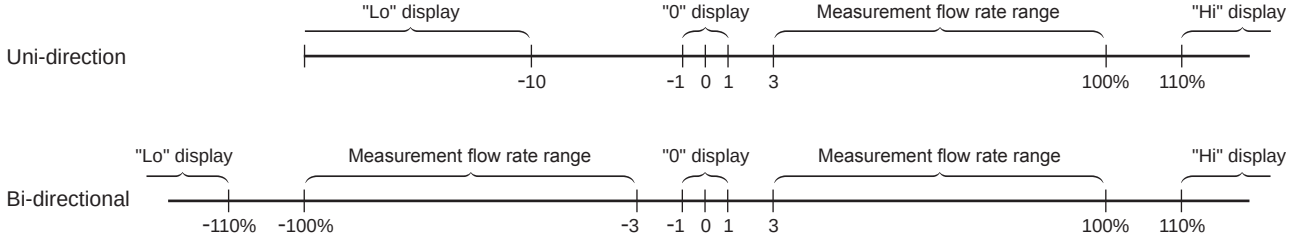

*3: The integrated flow is a calculated (reference) value. When using the integrated save function, take care to prevent the number of saves from exceeding the access count limit of the storage device (1 million times). (Changes to the settings are counted in number of accesses.)

$$\text{Number of saves} = \frac{\text{Usage time}}{5\ \text{mins}} < 1\ \text{million times}$$

When the instantaneous flow rate is 1% or less, the flow rate is counted as integrated flow rate.

*4: Use dry gas which does not contain corrosive elements such as chlorine, sulfur or acids, and which is clean and does not contain dust or oil mist. When using compressed air, use clean air that complies with JIS B 8392-1:2012 Class 1.1.1 to 1.6.2. Compressed air from the compressor contains drainage (water, oil oxides, foreign matter, etc.). To maintain the function of this product, install a filter, air dryer (min. pressure dew point 10˚C or less), and oil mist filter (max. oil content 0.1 mg/m^3) on the primary side (upstream side) of this product. (Refer to page 1119 for details on recommended circuit.)

*5: Compressed air is used for adjusting and inspecting this product. Accuracy for gas types other than air is a guideline.

*6: Accuracy is based on a CKD standard flow rate meter. It does not indicate absolute accuracy.
Repeatability, temperature characteristics, and pressure characteristics are not included for an accuracy of ±3% F.S.
Consider separately according to the working environment and working conditions.

*7: Repeatability calculated during a short time. Change over time is not included. (Refer to the product specifications for details.)

*8: The actual response time changes depending on the piping conditions. As a guideline, the response time setting can be selected within the range 50 msec to 1.5 sec.

*9: The output impedance of the output impedance of the analog output voltage output is approximately 1 kΩ. If the impedance of the connecting load is small, output and error increase. Check error with the impedance of the connecting load before using.

*10: The power supply voltage specifications differ for the voltage output and current output types.

*11: Current for when 24 VDC is connected, and no load is applied. The current consumption will vary depending on how the load is connected.

*12: The gas type switching function enables switching to argon, carbon dioxide and a gas mixture of argon 80% + carbon dioxide 20%. The full scale flow rate and analog output after changing are as follows. (Note that the 500 L/min and 1,000 L/min models do not have a gas change function.)

Gas	Flow direction	Measured flow rate range (□/min)							
		005	010	020	100	200	500	101	201
・Air ・Nitrogen ・Argon ・Argon80%+ Carbon dioxide20%	Uni-direction	15~500mL	30~1000mL	0.06~2.00L	0.30~10.00L	0.6~20.0L	1.5~50.0L	3.0~100.0L	6~200L
	Bi-direction	-500~-15mL	-1000~-30mL	-2.00~-0.06L	-10.00~-0.30L	-20.0~-0.6L	-50.0~-1.5L	-100.0~-3.0L	-200~-6L
		15~500mL	30~1000mL	0.06~2.00L	0.30~10.00L	0.6~20.0L	1.5~50.0L	3.0~100.0L	6~200L
・Carbon dioxide	Uni-direction	15~250mL	30~500mL	0.06~1.00L	0.30~5.00L	0.6~10.0L	1.5~25.0L	3.0~50.0L	6~100L
	Bi-direction	-250~-15mL	-500~-30mL	-1.00~0.06L	-5.00~0.30L	-10.0~-0.6L	-25.0~-1.5L	-50.0~-3.0L	-100~-6L
		15~250mL	30~500mL	0.06~1.00L	0.30~5.00L	0.6~10.0L	1.5~25.0L	3.0~50.0L	6~100L

Gas	Flow direction	Analog output			
		Output A		Output B	
		Voltage	Current	Voltage	Current
・Carbon dioxide	Uni-direction	1~3V	4~12mA	1~5V	4~20mA
	Bi-direction	2~4V	8~16mA	1~5V	4~20mA

The "Setting copy function" setting is selected at "Ⓖ Output specifications".
Note that the "External input" function is not available on models on which the "Setting copy function" is enabled.

*13: This product's protection circuit is effective only for specific misconnections and load short-circuits. It does not provide protection for all misconnections.

*14: This product measures changes in heat distribution that are caused by flow.
When this product is mounted in a vertical orientation, convective flow may affect heat distribution or cause the zero point to deviate.

*15: Accuracy may be affected by the piping conditions. To perform measurement with greater accuracy, install a straight pipe with a piping I.D. ten times larger. With the 500 L/min and 1,000 L/min models, use piping with an internal diameter of 9 mm or more. If it is less than 9 mm, accuracy may be negatively affected.

*16: Refer to page 1106 for weight.

How to order

FSM3 - L 005 U 1 BH 1 A 1 N - B M R - P80

- FSM3: Model No.
- L: Ⓐ Display
- 005: Ⓑ Flow rate ranges (full scale)
- U: Ⓒ Flow direction
- 1: Ⓓ Body material / applicable fluid
- BH: Ⓔ Port size
- 1: Ⓕ Piping direction
- A: Ⓖ Output specifications
- 1: Ⓗ Unit specifications
- N: Ⓘ Valve option
- B: Ⓙ Lead wire
- M: Ⓚ Mounting attachments
- R: Ⓛ Attached documents
- P80: Ⓜ Clean-room Specifications

[Example of model No.]

FSM3-L005U1BH1A1N-BMR-P80

Model: RAPIFLOW FSM3 Series

Ⓐ Display	L	: Liquid crystal display
Ⓑ Flow rate	005	: 500 mL/min
Ⓒ Flow direction	U	: Uni-direction
Ⓓ Body material / applicable fluid	1	: Resin/air
Ⓔ Port size	BH	: Push-in (ø4 mm for tube)
Ⓕ Piping direction	1	: Straight
Ⓖ Output specifications	A	: Analog voltage output ×1, NPN switch output ×1, setting copy function
Ⓗ Unit specifications	1	: SI units only
Ⓘ Valve option	N	: None
Ⓙ Lead wire	B	: 5-conductor 3 m
Ⓚ Mounting attachment	M	: DIN rail mount
Ⓛ Attached documents	R	: Company certification
Ⓜ Clean-room specifications	P80	: Oil free

Precautions for model No. selection

*1: Refer to the correspondence table on the following page when selecting the model.
*2: For "B: bi-directional" models, Ⓘ the only valve option is "N: none". Note that "T: with needle valve" cannot be selected.
*3: The G thread connection shape is compliant with ISO16030 standards.
*4: Please refer to the external dimension diagram (Pages 1056 to 1057) for the G thread connection shape when making a selection. (The G thread connection shape is compliant with JIS B 2351-1, O types.)
*5: Note that if you mount the elbow fitting in an upward position, it will interfere with the connector, and if you mount the elbow fitting in a downward position, it will interfere with the DIN rail mounting.
*6: Models with the unit switching function are not sold in Japan.
*7: Note that the bracket mounting position may interfere with the elbow fitting.
*8: Optional parts are provided with the product. They are not assembled with the product.
*9: The product surface is degreased and cleaned before packaging, and heat-sealed into an antistatic bag on a clean bench (Class 1000 or more).
*10: In addition to P70 specifications, wetted section materials are degreased and cleaned.

Code	Description

Ⓐ Display

L	Liquid crystal display

Ⓑ Flow rate ranges (full scale)

005	500 mL/min	500	50 L/min
010	1000 mL/min	101	100 L/min
020	2 L/min	201	200 L/min
050	5 L/min	501	500 L/min
100	10 L/min	102	1000 L/min
200	20 L/min		

Ⓒ Flow direction *2

U	Uni-direction
B	Bi-direction

Ⓓ Body material / applicable fluid

	Body material	Applicable fluid
1	Resin	Air (gas switchable)

Ⓔ Port size

BH	Push-in (for ø4 mm tube)	AF	G1/8	*3
CH	Push-in (for ø6 mm tube)	BF	G1/4	*3
DH	Push-in (for ø8 mm tube)	CF	G1/2	*3
EH	Push-in (for ø10 mm tube)	AB	G1/8	*4
HH	Push-in (for ø1/4" tube)	BB	G1/4	*4
JH	Push-in (for ø3/8" tube)	CB	G1/2	*4
AA	Rc1/8	AC	NPT1/8	
BA	Rc1/4	BC	NPT1/4	
CA	Rc1/2	CC	NPT1/2	

Ⓕ Piping direction

1	Straight	
2	Elbow	*5

Ⓖ Output specifications

	Analog output	Switch output	Setting copy function
A	1 point (Voltage output) 1-5 V	1 point (NPN)	With
B		2 points (NPN)	–
C		1-point output (PNP)	With
D		2-points output (PNP)	–
E	1 point Current output 4-20 mA	1 point (NPN)	With
F		2 points (NPN)	–
G		1-point output (PNP)	With
H		2-points output (PNP)	–

Ⓗ Unit specifications

1	SI units only
2	With unit switching function (overseas models only) *6

Ⓘ Valve option *2

N	None
T	With needle valve (only for models 200 L or less)

Ⓙ Lead wire

Blank	None
A	5-conductor 1 m
B	5-conductor 3 m

Ⓚ Mounting attachments *7, *8

Blank	None
H	Bracket 1 (for models 200 L or less)
J	Bracket 2 (for 500 or 1000 L models)
K	Panel mounting (for sensor products of models 200 L or less)
L	Panel mounting (for needle valves of models 200 L or less)
M	DIN rail mounting (for models 200 L or less)

Ⓛ Attached documents

Blank	None
R	Company certification
S	Company certification + Traceability certification

Ⓜ Clean-room specifications

Blank	None	
P70	Anti-dust generation	*9
P80	Oil free	*10

Compatibility table of flow rate range, port size, and needle valve options

Ⓑ Flow rate code	Ⓔ Port sizes Ⓕ Piping direction															
	BH1	CH1	DH1	EH1	HH1	JH1	BH2	CH2	DH2	EH2	HH2	JH2	AA1	BA1	CA1	AA2
005	●○	●○			●○		●○	●○			●○		●○			●○
010	●○	●○			●○		●○	●○			●○		●○			●○
020	●○	●○			●○		●○	●○			●○		●○			●○
050	●○	●○			●○		●○	●○			●○		●○			●○
100	●○	●○			●○		●○	●○			●○		●○			●○
200	●○	●○			●○		●○	●○			●○		●○			●○
500		●○	●○		●○			●○	●○		●○		●○	●○		●○
101			●○	●○		●○			●○	●○		●○		●○		
201			●○	●○		●○			●○	●○		●○		●○		
501															●	
102															●	
	BA2	AF1	BF1	CF1	AF2	BF2	AB1	BB1	CB1	AB2	BB2	AC1	BC1	CC1	AC2	BC2
005		●○			●○		●○			●○		●○			●○	
010		●○			●○		●○			●○		●○			●○	
020		●○			●○		●○			●○		●○			●○	
050		●○			●○		●○			●○		●○			●○	
100		●○			●○		●○			●○		●○			●○	
200		●○			●○		●○			●○		●○			●○	
500	●○	●○	●○		●○	●○	●○	●○		●○	●○	●○	●○		●○	●○
101	●○		●○			●○		●○			●○		●○			●○
201	●○		●○			●○		●○			●○		●○			●○
501				●					●					●		
102				●					●					●		

●: Port compatibility ○: Needle valve option compatibility

Compatibility table of port sizes and clean-room specifications

Ⓜ Clean-room specifications	Ⓔ Port size Ⓕ Piping direction															
	BH1	CH1	DH1	EH1	HH1	JH1	BH2	CH2	DH2	EH2	HH2	JH2	AA1	BA1	CA1	AA2
Blank	●	●	●	●	●	●	●	●	●	●	●	●	●	●	●	●
P70	●	●	●	●	●	●	●	●	●	●	●	●	●	●	●	●
P80	●	●					●	●					●	●	●	●
	BA2	AF1	BF1	CF1	AF2	BF2	AB1	BB1	CB1	AB2	BB2	AC1	BC1	CC1	AC2	BC2
Blank	●	●	●	●	●	●	●	●	●	●	●	●	●	●	●	●
P70	●	●	●	●	●	●	●	●	●	●	●	●	●	●	●	●
P80	●	●	●	●	●	●	●	●	●	●	●	●	●	●	●	●

SCPD3
SCM
SSD2
MDC2
SMG
LCM
LCR
LCG
LCX
STM
STG
STR2
MRL2
GRC
Cylinder switch
MN3E MN4E
4GA/B
M4GA/B
MN4GA/B
F.R (module unit)
Clean F.R
Precision R
Press gauge Diff. press gauge
Electro-pneumatic R
Speed controller
Auxiliary valve
Fitting/ tube
Clean air unit
Pressure sensor
Flow rate sensor
Valve for air blow
Ending

Dimensions (LCD display)

Port sizes: Straight ø4 mm, ø6 mm, ø1/4", Rc1/8, G1/8, NPT1/8

● FSM3−L□□1/BH1/CH1/HH1/AA1/AF1/AB1/AC1-P70/P80 (Full scale flow rates: 500 mL/min,1, 2, 5,10, 20, 50 L/min)

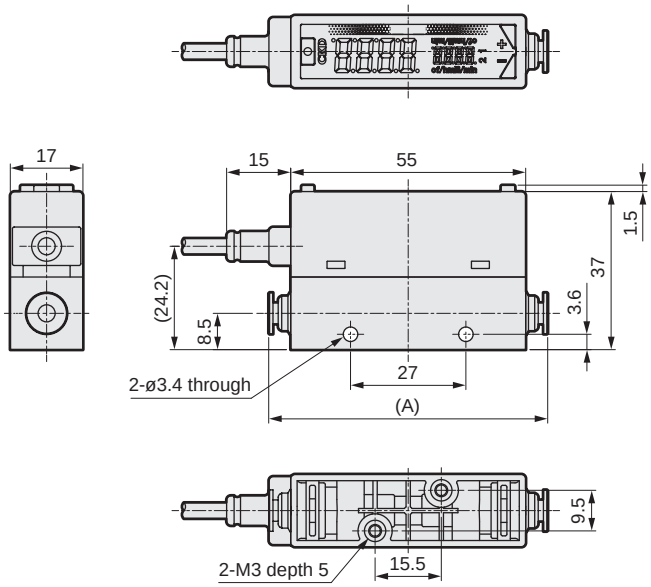

Rc1/8, NPT1/8, G1/8 (AB1)

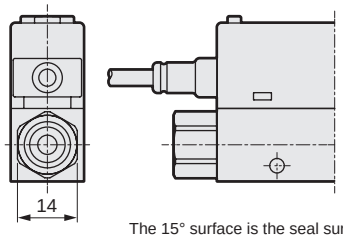

G thread shape (AB)

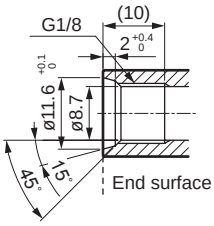

The 15° surface is the seal surface.
Please note that this is not an end face seal. Please also use upon confirming the thread insertion depth of the fitting.

G1/8 (AF1)

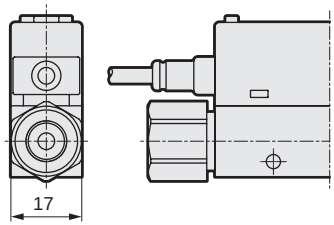

Model No.	Fitting	Dimension (A)
FSM3-L□□1BH1	Push-in ø4 mm	(65)
FSM3-L□□1CH1	Push-in ø6 mm	(67.2)
FSM3-L□□1HH1	Push-in 1/4"	(70.4)
FSM3-L□□1AA1	Rc1/8	(75)
FSM3-L□□1AF1	G1/8	(87)
FSM3-L□□1AB1	G1/8	(87)
FSM3-L□□1AC1	NPT1/8	(75)

Port sizes: Straight ø8 mm, ø10 mm, ø3/8", Rc1/4, G1/4, NPT1/4

● FSM3−L□□1/DH1/EH1/JH1/BA1/BF1/BB1/BC1-P70/P80(Full scale flow rates: 50, 100, 200 L/min)

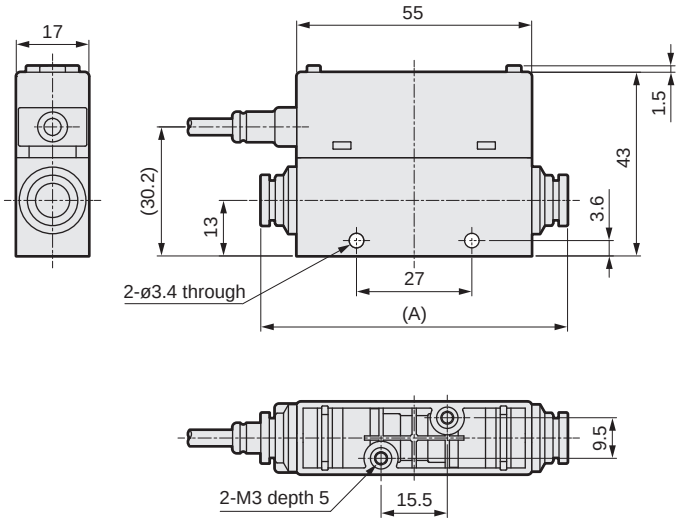

Rc1/4,NPT1/4,G1/4 (BB1)

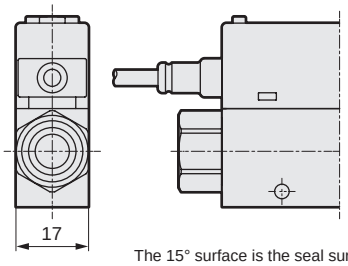

G thread shape (BB)

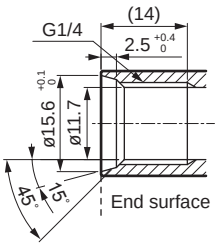

The 15° surface is the seal surface.
Please note that this is not an end face seal. Please also use upon confirming the thread insertion depth of the fitting.

G1/4 (BF1)

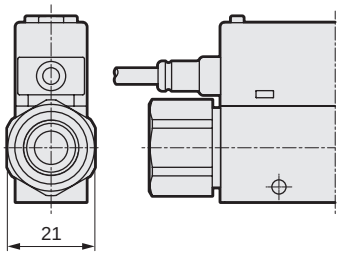

Model No.	Fitting	Dimension (A)
FSM3-L□□1DH1	Push-in ø8 mm	(70.6)
FSM3-L□□1EH1	Push-in ø10 mm	(82.1)
FSM3-L□□1JH1	Push-in 3/8"	(83.4)
FSM3-L□□1BA1	Rc1/4	(75)
FSM3-L□□1BF1	G1/4	(89)
FSM3-L□□1BB1	G1/4	(89)
FSM3-L□□1BC1	NPT1/4	(75)

Dimensions (LCD display)

Port sizes: Straight Rc1/2, G1/2, NPT1/2

● FSM3−L[B][C]1/CA1/CF1/CB1/CC1-P70/P80 (Full scale flow rates: 500, 1000 L/min)

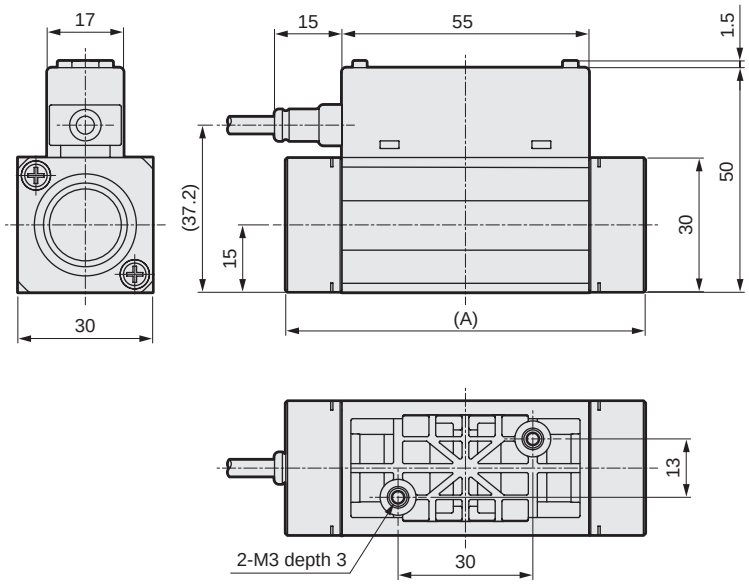

G thread shape (CB)

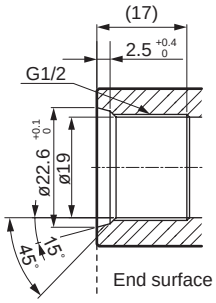

The 15° surface is the seal surface.
Please note that this is not an end face seal. Please also use upon confirming the thread insertion depth of the fitting.

G thread shape (CF)

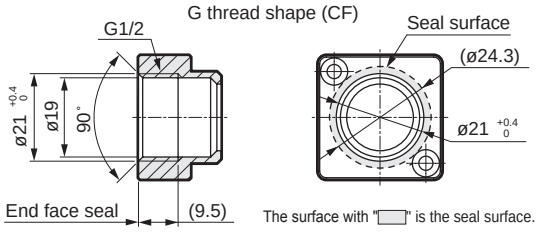

The surface with "▭" is the seal surface.

Model No.	Fitting	Dimension (A)
FSM3-L□□1CA1	Rc1/2	(80)
FSM3-L□□1CF1	G1/2	(80)
FSM3-L□□1CB1	G1/2	(95.4)
FSM3-L□□1CC1	NPTG1/2	(80)

Port sizes: Elbow ø4 mm, ø6 mm, ø1/4", Rc1/8, G1/8, NPT1/8

● FSM3−L[B][C]1/BH2/CH2/HH2/AA2/AF2/AB2/AC2-P70/P80 (Full scale flow rates: 500 mL/min, 1, 2, 5, 10, 20, 50 L/min)

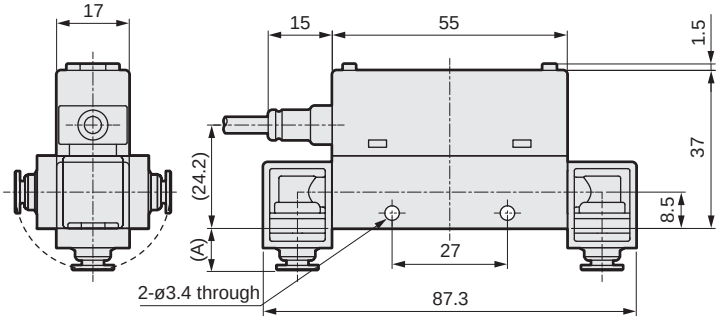

* The shapes of the upper surface and lower surface of the main body are the same as that of the straight type.

Model No.	Fitting	Dimension (A)
FSM3-L□□1BH2	Push-in ø4 mm	(9.5)
FSM3-L□□1CH2	Push-in ø6 mm	(10.6)
FSM3-L□□1HH2	Push-in 1/4"	(12.2)
FSM3-L□□1AA2	Rc1/8	(14.5)
FSM3-L□□1AF2	G1/8 *	(20.5)
FSM3-L□□1AB2	G1/8 *	(20.5)
FSM3-L□□1AC2	NPT1/8	(14.5)

*Please refer to the straight type for the G thread shape.

Port sizes: Elbow ø8 mm, ø10 mm, ø3/8", Rc1/4, G1/4, NPT1/4

● FSM3−L[B][C]1/DH2/EH2/JH2/BA2/BF2/BB2/BC2-P70/P80 (Full scale flow rates: 50, 100, 200 L/min)

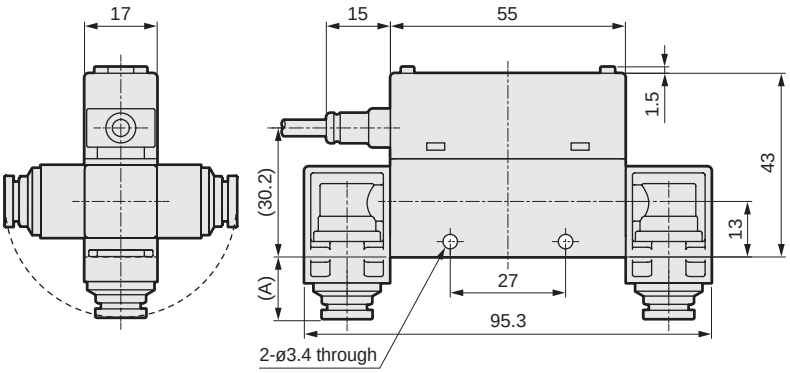

* The shapes of the upper surface and lower surface of the main body are the same as that of the straight type.

Model No.	Fitting	Dimension (A)
FSM3-L□□1DH2	Push-in ø8 mm	(13.6)
FSM3-L□□1EH2	Push-in ø10 mm	(19.3)
FSM3-L□□1JH2	Push-in 3/8"	(20.0)
FSM3-L□□1BA2	Rc1/4	(15.8)
FSM3-L□□1BF2	G1/4 *	(22.8)
FSM3-L□□1BB2	G1/4 *	(22.8)
FSM3-L□□1BC2	NPT1/4	(15.8)

*Please refer to the straight type for the G thread shape.

SCPD3
SCM
SSD2
MDC2
SMG
LCM
LCR
LCG
LCX
STM
STG
STR2
MRL2
GRC
Cylinder switch
MN3E MN4E
4GA/B
M4GA/B
MN4GA/B
F.R (module unit)
Clean F.R
Precision R
Press gauge Diff. press gauge
Electro-pneumatic R
Speed controller
Auxiliary valve
Fitting/ tube
Clean air unit
Pressure sensor
Flow rate sensor
Valve for air blow
Ending

Solenoid valve with needle dimensions

Port sizes: ø4 mm, ø6 mm, ø1/4", Rc1/8, G1/8, NPT1/8

● FSM3−L[B][C]1/BH1/CH1/HH1/AA1/AF1/AB1/AC1/[G][H]T-P70/P80 (Full scale flow rates: 500 mL/min, 1, 2, 5, 10, 20, 50 L/min)

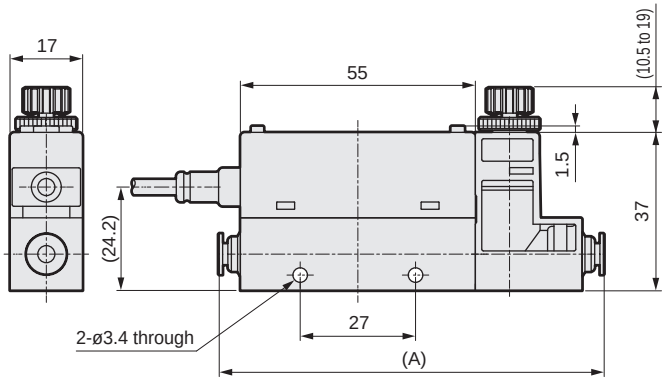

G thread shape (AB)

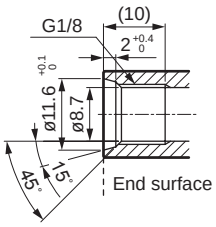

The 15° surface is the seal surface. Please note that this is not an end face seal. Please also use upon confirming the thread insertion depth of the fitting.

* The shapes of the upper surface and lower surface of the main body are the same as that of the straight type.

Model No.	Fitting	Dimension (A)
FSM3-L□□1BH1	Push-in ø4 mm	(90)
FSM3-L□□1CH1	Push-in ø6 mm	(92.2)
FSM3-L□□1HH1	Push-in 1/4"	(95.4)
FSM3-L□□1AA1	Rc1/8	(100)
FSM3-L□□1AF1	G1/8	(112)
FSM3-L□□1AB1	G1/8	(112)
FSM3-L□□1AC1	NPT1/8	(100)

Port sizes: ø8 mm, ø10 mm, ø3/8", Rc1/4, G1/4, NPT1/4

● FSM3−L[B][C]1/DH1/EH1/JH1/BA1/BF1/BB1/BC1/[G][H]T-P70/P80 (Full scale flow rates: 50, 100, 200 L/min)

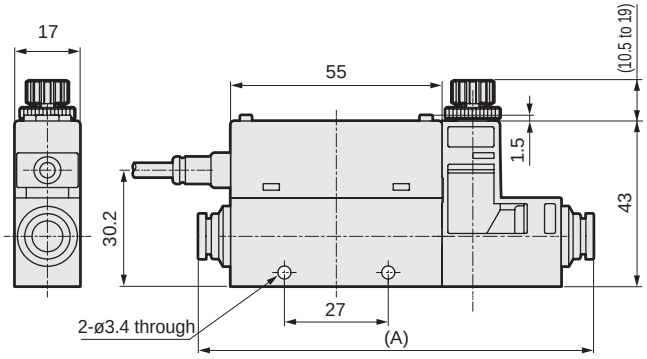

G thread shape (BB)

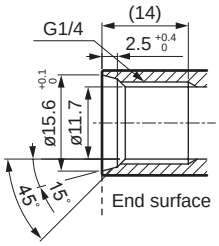

The 15° surface is the seal surface. Please note that this is not an end face seal. Please also use upon confirming the thread insertion depth of the fitting.

* The shapes of the upper surface and lower surface of the main body are the same as that of the straight type.

Model No.	Fitting	Dimension (A)
FSM3-L□□1DH1	Push-in ø8 mm	(101.6)
FSM3-L□□1EH1	Push-in ø10 mm	(113.1)
FSM3-L□□1JH1	Push-in 3/8"	(114.4)
FSM3-L□□1BA1	Rc1/4	(106)
FSM3-L□□1BF1	G1/4	(120)
FSM3-L□□1BB1	G1/4	(120)
FSM3-L□□1BC1	NPT1/4	(106)

MEMO

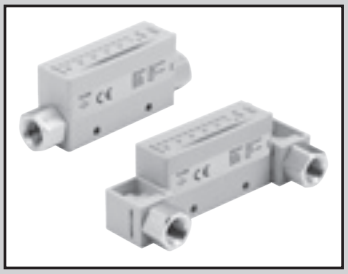

Compact flow rate sensor RAPIFLOW

FSM3 Series

Bar display

● Resin body (flow rate range: 500 mL/min to 1000 L/min)

Bar display specifications

Item			FSM3-[A][B][C][D][E][F][G][H][I]-[ ]										
			[B]										
			005	010	020	050	100	200	500	101	201	501	102
Flow direction	[C]	U	Uni-direction										
		B	Bi-direction										
Measurement flow rate range (□/min) *1	[B]	U	15 to 500 mL	30 to 1000 mL	0.06 to 2.00 L	0.15 to 5.00 L	0.30 to 10.00 L	0.6 to 20.0 L	1.5 to 50.0 L	3.0 to 100.0 L	6 to 200 L	15 to 500 L	30 to 1000 L
		B	−500 to −15, 15 to 500 mL	−1000 to −30, 30 to 1000 mL	−2.00 to −0.06, 0.06 to 2.00 L	−5.00 to −0.15, 0.15 to 5.00 L	−10.00 to −0.30, 0.30 to 10.00 L	−20.0 to −0.6, 0.6 to 20.0 L	−50.0 to −1.5, 1.5 to 50.0 L	−100.0 to −3.0, 3.0 to 100.0 L	−200 to −6, 6 to 200 L	−500 to −15, 15 to 500 L	−1000 to −30, 30 to 1000 L
Display			LED bar display										
Working fluid		Applicable fluid *2	Clean air (JIS B 8392-1:2012 1.1.1 to 5.6.2), compressed air (JIS B 8392-1:2012 1.1.1 to 1.6.2), nitrogen gas										
		Temperature range	0 to 50°C (no condensation)										
		Pressure range	−0.09 to 0.75 MPa										
		Proof pressure	1 MPa										
Operating ambient temperature/humidity			0 to 50°C, 90% RH or less										
Storage temperature			−10 to 60°C										
Accuracy		Accuracy *3	Within ±3% F.S. (Secondary side released to atmosphere) (The scope of warranty is in accordance with the "measurement flow rate range.")										
		Repeatability *4	Within ±1% F.S. (Secondary side released to atmosphere)										
		Temperature characteristics	Within ±0.2% F.S./°C (15 to 35°C, base temperature 25°C)										
		Pressure characteristics	Within ±5% F.S. (where secondary side is released to atmosphere)								Within ±5% F.S. (0.35 MPa standard)		
Response time *5			50 msec or less										
Analog output *6	[G]	J	1 to 5 V voltage output (connecting load impedance 50 kΩ or more)										
		K	4 to 20 mA current output (connecting load impedance 0 to 300 Ω)										
Power supply voltage *7		J	12 to 24 VDC (10.8 to 26.4 V) ripple rate 1% or less										
		K	24 VDC (21.6 to 26.4 V) ripple rate 1% or less										
Current consumption *8			45 mA or less										
Lead wire			ø3.7, AWG26 or equivalent × 4-conductor (connector), insulator O.D. ø1.0										
Degree of protection			IP40 or equivalent (IEC standard)										
Protection circuit *9			Power supply reverse connection protection										
Vibration resistance			10 to 150 Hz, 100 m/s^2, 2 hours each in X, Y, Z directions										
EMC Directive			EN55011, EN61000-6-2, EN61000-4-2/3/4/6/8										
Mounting	Mounting orientation *10		Unrestricted in vertical/horizontal direction										
	Straight piping section *11		Not required										

*1: The value converted to volumetric flow rate at standard condition (20°C 1 barometric pressure (101 kPa) 65%RH)
*2: Use dry gas which does not contain corrosive elements such as chlorine, sulfur or acids, and which is clean and does not contain dust or oil mist. When using compressed air, use clean air that complies with JIS B 8392-1:2012 Class 1.1.1 to 1.6.2. Compressed air from the compressor contains drainage (water, oil oxides, foreign matter, etc.). To maintain the function of this product, install a filter, air dryer (min. pressure dew point 10˚C or less), and oil mist filter (max. oil content 0.1 mg/m^3) on the primary side (upstream side) of this product. (Refer to page 1118 for details on recommended circuit.)
*3: Accuracy is based on a CKD standard flow rate meter. It does not indicate absolute accuracy.
Repeatability, temperature characteristics, and pressure characteristics are not included for an accuracy of ±3% F.S.
Consider separately according to the working environment and working conditions.
*4: Repeatability calculated during a short time. Change over time is not included. (Refer to the product specifications for details.)
*5: The actual response time changes depending on the piping conditions.
*6: The output impedance of the output impedance of the analog output voltage output is approximately 1 kΩ. If the impedance of the connecting load is small, output and error increase. Check error with the impedance of the connecting load before using.
*7: The power supply voltage specifications differ for the voltage output and current output types.
*8: Current for when 24 VDC is connected, and no load is applied. The current consumption will vary depending on how the load is connected.
*9: This product's protection circuit is effective only for specific misconnections and load short-circuits. It does not provide protection for all misconnections.
*10: This product measures changes in heat distribution that are caused by flow.
When this product is mounted in a vertical orientation, convective flow may affect heat distribution or cause the zero point to deviate.
*11: Accuracy may be affected by the piping conditions. To perform measurement with greater accuracy, install a straight pipe with a piping I.D. ten times larger. With the 500 L/min and 1,000 L/min models, use piping with an internal diameter of 9 mm or more. If it is less than 9 mm, accuracy may be negatively affected.
*12: Refer to page 1106 for weight.

How to order

FSM3 - B 005 U 1 BH 1 J 1 N - D H S - P70

- Model No.
- Ⓐ Display
- Ⓑ Flow rate ranges (full scale)
- Ⓒ Flow direction
- Ⓓ Body material / applicable fluid
- Ⓔ Port size
- Ⓕ Piping direction
- Ⓖ Output specifications
- Ⓗ Unit specifications
- Ⓘ Valve option
- Ⓙ Lead wire
- Ⓚ Mounting (not assembled)
- Ⓛ Attached documents
- Ⓜ Clean-room specifications

Code	Description
Ⓐ Display	
B	Bar display

Ⓑ Flow rate ranges (full scale)

005	500 mL/min	**500**	50 L/min
010	1000 mL/min	**101**	100 L/min
020	2 L/min	**201**	200 L/min
050	5 L/min	**501**	500 L/min
100	10 L/min	**102**	1000 L/min
200	20 L/min		

Ⓒ Flow direction *3

U	Uni-direction
B	Bi-direction

Ⓓ Body material / applicable fluid

	Body material	Applicable fluids
1	Resin	Air

Ⓔ Port size

BH	Push-in (for ø4 mm tube)	**AF**	G1/8	*4
CH	Push-in (for ø6 mm tube)	**BF**	G1/4	*4
DH	Push-in (for ø8 mm tube)	**CF**	G1/2	*4
EH	Push-in (for ø10 mm tube)	**AB**	G1/8	*5
HH	Push-in (for ø1/4" tube)	**BB**	G1/4	*5
JH	Push-in (for ø3/8" tube)	**CB**	G1/2	*5
AA	Rc1/8	**AC**	NPT1/8	
BA	Rc1/4	**BC**	NPT1/4	
CA	Rc1/2	**CC**	NPT1/2	

Ⓕ Piping direction

1	Straight	
2	Elbow	*6

Ⓖ Output specifications *2

J	Analog voltage output x 1 point
K	Analog current output x 1 point

Ⓗ Unit specifications

1	SI units only

Ⓘ Valve option *3

N	None

Ⓙ Lead wire

Blank	None
C	4-conductor 1 m
D	4-conductor 3 m

Ⓚ Mounting (not assembled) *7, *8

Blank	None
H	Bracket 1 (for models 200 L or less)
J	Bracket 2 (for 500 or 1000 L models)
M	DIN rail mounting (for models 200 L or less)

Ⓛ Attached documents

Blank	None
R	Company certification
S	Company certification + Traceability certification

Ⓜ Clean-room specifications

P70	Anti-dust generation	*9
P80	Oil free	*10

[Example of model No.]

FSM3-B005U1BH1J1N-DHS-P70

Model: RAPIFLOW FSM3 Series

Ⓐ Display	B	: Bar display
Ⓑ Flow rate	005	: 500 mL/min
Ⓒ Flow direction	U	: Uni-direction
Ⓓ Body material / applicable fluid	1	: Resin/air
Ⓔ Port size	BH	: Push-in (ø4 mm for tube)
Ⓕ Piping direction	1	: Straight
Ⓖ Output specifications	J	: Analog voltage output ×1
Ⓗ Unit specifications	1	: SI units only
Ⓘ Valve option	N	: None
Ⓙ Lead wire	D	: 4-conductor 3 m
Ⓚ Mounting attachment	H	: Bracket
Ⓛ Attached documents	S	: Company certification + Traceability certification
Ⓜ Clean-room specifications	P70	: Anti-dust generation

Precautions for model No. selection

*1: Refer to the correspondence table on the following page when selecting the model.
*2: When using in combination with a separated display (FSM2-D), select ""J": analog voltage output × 1 point".
*3: For "B: bi-directional" models, Ⓘ the only valve option is "N: none".
*4: The G thread connection shape is compliant with ISO16030 standards.
*5: Please refer to the external dimension diagram (Pages 1064 to 1065) for the G thread connection shape when making a selection. (The G thread connection shape is compliant with JIS B 2351-1, O types.)
*6: Note that if you mount the elbow fitting in an upward position, it will interfere with the connector, and if you mount the elbow fitting in a downward position, it will interfere with the DIN rail mounting.
*7: "Panel mount" option cannot be selected. Note that the bracket mounting position may interfere with the elbow fitting.
*8: Optional parts are provided with the product. They are not assembled with the product.
*9: The product surface is degreased and cleaned before packaging, and heat-sealed into an antistatic bag on a clean bench (Class 1000 or more).
*10: In addition to P70 specifications, wetted section materials are degreased and cleaned.

Compatibility table of flow rate range and port size

Ⓑ Flow rate codes	Ⓔ Port sizes Ⓕ Piping direction															
	BH1	CH1	DH1	EH1	HH1	JH1	BH2	CH2	DH2	EH2	HH2	JH2	AA1	BA1	CA1	AA2
005	●	●			●		●	●			●		●			●
010	●	●			●		●	●			●		●			●
020	●	●			●		●	●			●		●			●
050	●	●			●		●	●			●		●			●
100	●	●			●		●	●			●		●			●
200	●	●			●		●	●			●		●			●
500		●	●		●			●	●		●		●	●		●
101			●	●		●			●	●		●		●		
201			●	●		●			●	●		●		●		
501															●	
102															●	
	BA2	AF1	BF1	CF1	AF2	BF2	AB1	BB1	CB1	AB2	BB2	AC1	BC1	CC1	AC2	BC2
005		●			●		●			●		●			●	
010		●			●		●			●		●			●	
020		●			●		●			●		●			●	
050		●			●		●			●		●			●	
100		●			●		●			●		●			●	
200		●			●		●			●		●			●	
500	●	●	●		●	●	●	●		●	●	●	●		●	●
101	●		●			●		●			●		●			●
201	●		●			●		●			●		●			●
501				●					●					●		
102				●					●					●		

● : Port compatibility

Compatibility table of port sizes and clean-room specifications

Ⓜ Clean-room specifications	Ⓔ Port size Ⓕ Piping direction															
	BH1	CH1	DH1	EH1	HH1	JH1	BH2	CH2	DH2	EH2	HH2	JH2	AA1	BA1	CA1	AA2
Blank	●	●	●	●	●	●	●	●	●	●	●	●	●	●	●	●
P70	●	●	●	●	●	●	●	●	●	●	●	●	●	●	●	●
P80	●	●					●	●					●	●	●	●
	BA2	AF1	BF1	CF1	AF2	BF2	AB1	BB1	CB1	AB2	BB2	AC1	BC1	CC1	AC2	BC2
Blank	●	●	●	●	●	●	●	●	●	●	●	●	●	●	●	●
P70	●	●	●	●	●	●	●	●	●	●	●	●	●	●	●	●
P80	●	●	●	●	●	●	●	●	●	●	●	●	●	●	●	●

SCPD3
SCM
SSD2
MDC2
SMG
LCM
LCR
LCG
LCX
STM
STG
STR2
MRL2
GRC
Cylinder switch
MN3E MN4E
4GA/B
M4GA/B
MN4GA/B
F.R (module unit)
Clean F.R
Precision R
Press gauge Diff. press gauge
Electro-pneumatic R
Speed controller
Auxiliary valve
Fitting/ tube
Clean air unit
Pressure sensor
Flow rate sensor
Valve for air blow
Ending

Dimensions (bar display)

Port sizes: Straight ø4 mm, ø6 mm, ø1/4", Rc1/8, G1/8, NPT1/8

● FSM3−B□□1/BH1/CH1/HH1/AA1/AF1/AB1/AC1-P79/P80 (Full scale flow rates: 500 mL/min, 1, 2, 5, 10, 20, 50 L/min)

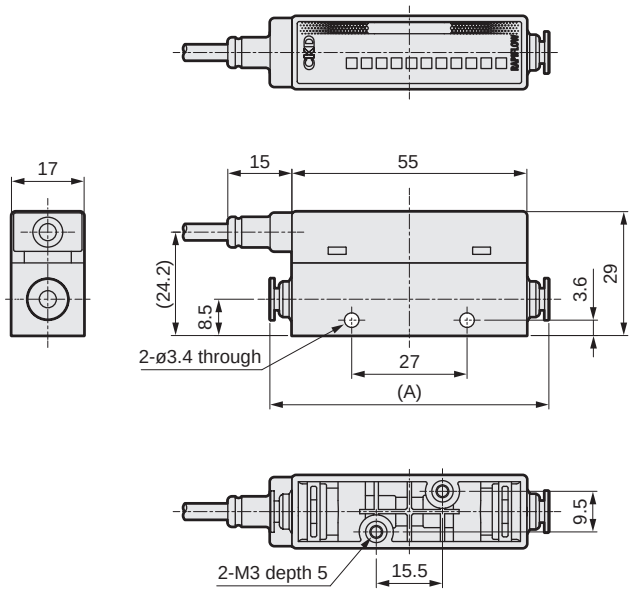

Rc1/8, NPT1/8, G1/8 (AB1)

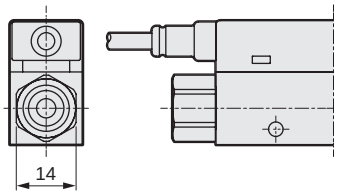

G thread shape (AB)

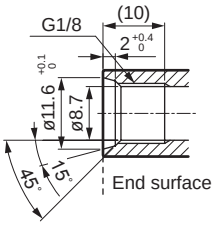

The 15° surface is the seal surface.
Please note that this is not an end face seal. Please also use upon confirming the thread insertion depth of the fitting.

G1/8 (AF1)

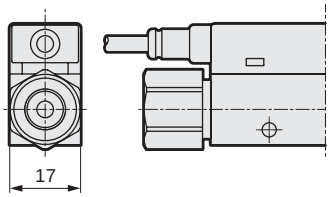

Model No.	Fitting	Dimension (A)
FSM3-B□□1BH1	Push-in ø4 mm	(65)
FSM3-B□□1CH1	Push-in ø6 mm	(67.2)
FSM3-B□□1HH1	Push-in 1/4"	(70.4)
FSM3-B□□1AA1	Rc1/8	(75)
FSM3-B□□1AF1	G1/8	(87)
FSM3-B□□1AB1	G1/8	(87)
FSM3-B□□1AC1	NPT1/8	(75)

Port sizes: Straight ø8 mm, ø10 mm, ø3/8", Rc1/4, G1/4, NPT1/4

● FSM3−B□□1/DH1/EH1/JH1/BA1/BF1/BB1/BC1-P79/P80 (Full scale flow rates: 50, 100, 200 L/min)

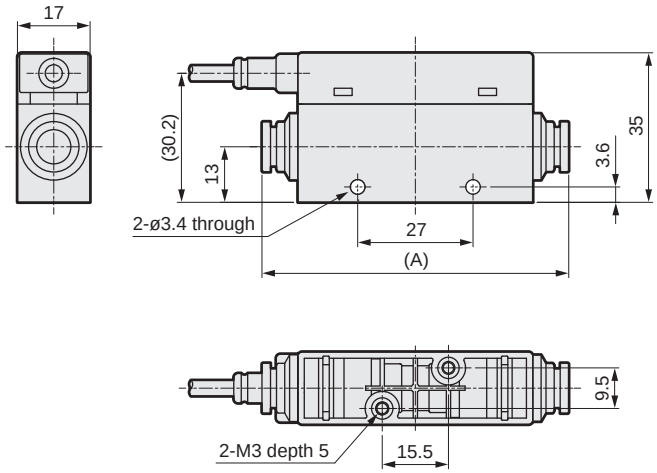

Rc1/4, NPT1/4, G1/4 (BB1)

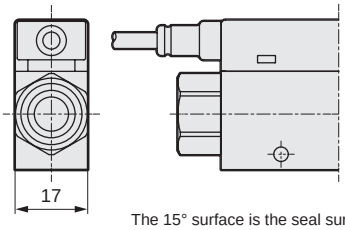

G thread shape (BB)

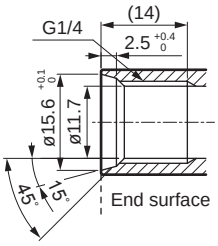

The 15° surface is the seal surface.
Please note that this is not an end face seal. Please also use upon confirming the thread insertion depth of the fitting.

G1/4 (BF1)

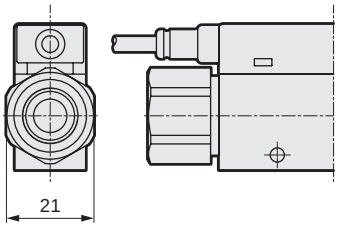

Model No.	Fitting	Dimension (A)
FSM3-B□□1DH1	Push-in ø8 mm	(70.6)
FSM3-B□□1EH1	Push-in ø10 mm	(82.1)
FSM3-B□□1JH1	Push-in 3/8"	(83.4)
FSM3-B□□1BA1	Rc1/4	(75)
FSM3-B□□1BF1	G1/4	(89)
FSM3-B□□1BB1	G1/4	(89)
FSM3-B□□1BC1	NPT1/4	(75)

Dimensions (bar display)

Port sizes: Straight Rc1/2, G1/2, NPT1/2

● FSM3−B□□1/CA1/CF1/CB1/CC1-P79/P80 (Full scale flow rates: 500, 1000 L/min)

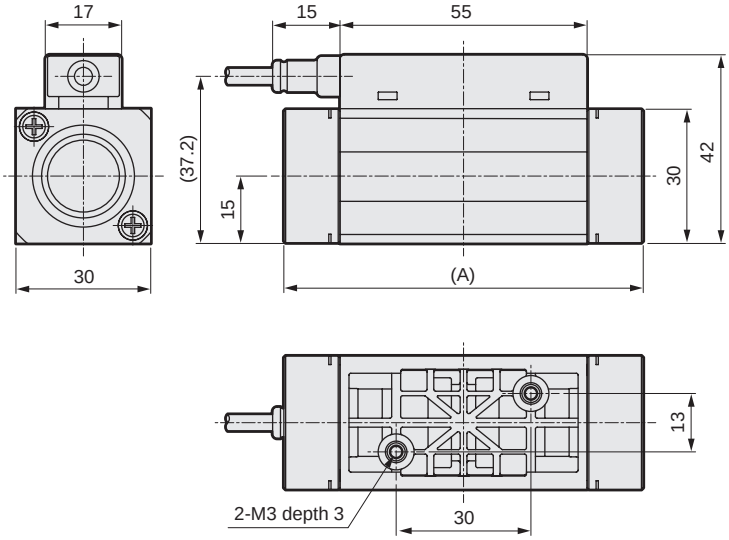

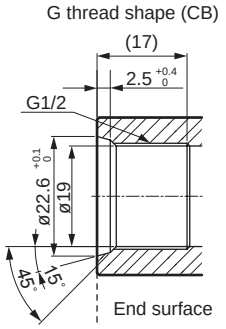

The 15° surface is the seal surface. Please note that this is not an end face seal. Please also use upon confirming the thread insertion depth of the fitting.

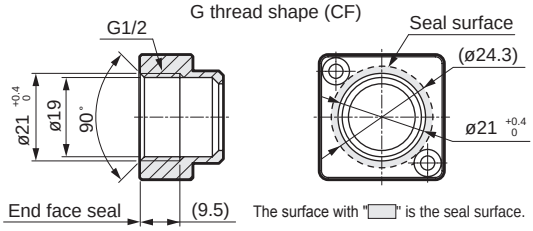

Model No.	Fitting	Dimension (A)
FSM3-B□□1CA1	Rc1/2	(80)
FSM3-B□□1CF1	G1/2	(80)
FSM3-B□□1CB1	G1/2	(95.4)
FSM3-B□□1CC1	NPT1/2	(80)

Port sizes: Elbow ø4 mm, ø6 mm, ø1/4", Rc1/8, G1/8, NPT1/8

● FSM3−B□□1/BH2/CH2/HH2/AA2/AF2/AB2/AC2-P79/P80 (Full scale flow rates: 500 mL/min, 1, 2, 5, 10, 20, 50 L/min)

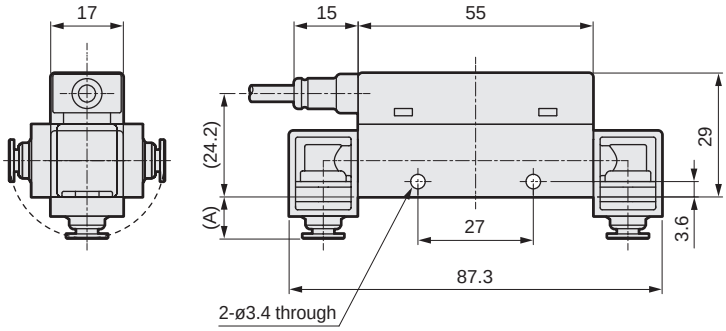

* The shapes of the upper surface and lower surface of the main body are the same as that of the straight type.

Model No.	Fitting	Dimension (A)
FSM3-B□□1BH2	Push-in ø4 mm	(9.5)
FSM3-B□□1CH2	Push-in ø6 mm	(10.6)
FSM3-B□□1HH2	Push-in 1/4"	(12.2)
FSM3-B□□1AA2	Rc1/8	(14.5)
FSM3-B□□1AF2	G1/8 *	(20.5)
FSM3-B□□1AB2	G1/8 *	(20.5)
FSM3-B□□1AC2	NPT1/8	(14.5)

*Please refer to the straight type for the G thread shape.

Port sizes: Elbow ø8 mm, ø10 mm, ø3/8", Rc1/4, G1/4, NPT1/4

● FSM3−B□□1/DH2/EH2/JH2/BA2/BF2/BB2/BC2-P79/P80 (Full scale flow rates: 50, 100, 200 L/min)

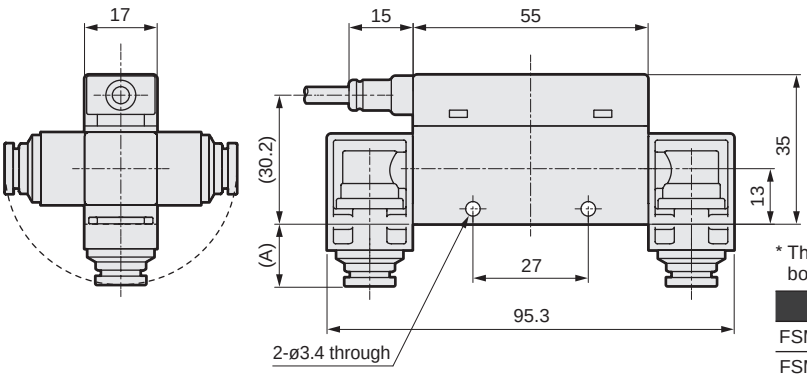

* The shapes of the upper surface and lower surface of the main body are the same as that of the straight type.

Model No.	Fitting	Dimension (A)
FSM3-B□□1DH2	Push-in ø8 mm	(13.6)
FSM3-B□□1EH2	Push-in ø10 mm	(19.3)
FSM3-B□□1JH2	Push-in 3/8"	(20.0)
FSM3-B□□1BA2	Rc1/4	(15.8)
FSM3-B□□1BF2	G1/4 *	(22.8)
FSM3-B□□1BB2	G1/4 *	(22.8)
FSM3-B□□1BC2	NPT1/4	(15.8)

*Please refer to the straight type for the G thread shape.

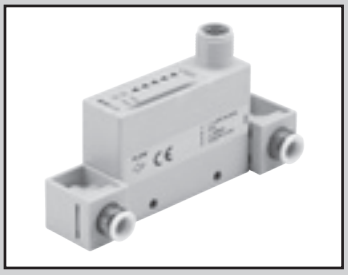

Compact flow rate sensor RAPIFLOW

FSM3 Series

IO-Link

● Resin body (flow rate range: 500 mL/min to 1000 L/min)

IO-Link specifications

Item			FSM3-[A][B][C][D][E][F][G][H][I]-[ ]										
			[B]										
			005	010	020	050	100	200	500	101	201	501	102
Flow direction	[C]	U	Uni-direction										
		B	Bi-direction										
Measurement flow rate range (□/min) *1	[B]	U	15 to 500 mL	30 to 1000 mL	0.06 to 2.00 L	0.15 to 5.00 L	0.30 to 10.00 L	0.6 to 20.0 L	1.5 to 50.0 L	3.0 to 100.0 L	6 to 200 L	15 to 500 L	30 to 1000 L
		B	−500 to −15, 15 to 500 mL	−1000 to −30, 30 to 1000 mL	−2.00 to −0.06, 0.06 to 2.00 L	−5.00 to −0.15, 0.15 to 5.00 L	−10.00 to −0.30, 0.30 to 10.00 L	−20.0 to −0.6, 0.6 to 20.0 L	−50.0 to −1.5, 1.5 to 50.0 L	−100.0 to −3.0, 3.0 to 100.0 L	−200 to −6, 6 to 200 L	−500 to −15, 15 to 500 L	−1000 to −30, 30 to 1000 L
Display			LED display (power and status indicators)										
Working fluid		Applicable fluid *2	Clean air (JIS B 8392-1:2012 1.1.1 to 5.6.2), compressed air (JIS B 8392-1:2012 1.1.1 to 1.6.2)										
			nitrogen, argon, carbon dioxide, gas mixture (argon + carbon dioxide)									-	
		Temperature range	0 to 50°C (no condensation)										
		Pressure range	−0.09 to 0.75 MPa										
		Proof pressure	1 MPa										
Operating ambient temperature/humidity			0 to 50°C, 90% RH or less										
Storage temperature			−10 to 60°C										
Accuracy *3 (Fluid: in dry air)		Accuracy *4	Within ±3% F.S. (Secondary side released to atmosphere) (The scope of warranty is in accordance with the "measurement flow rate range.")										
		Repeatability *5	Within ±1% F.S. (Secondary side released to atmosphere)										
		Temperature characteristics	Within ±0.2% F.S./°C (15 to 35°C, base temperature 25°C)										
		Pressure characteristics	Within ±5% F.S. (where secondary side is released to atmosphere)								Within ±5% F.S. (0.35 MPa standard)		
Response time		*6	50 msec or less										
Power supply voltage			18 to 30 VDC (ripple rate 1% or less)										
Current consumption		*7	45 mA or less										
Lead wire		*8	M12 both-end connector lead wire (3 m), AWG#23 or equivalent, 4-conductor										
Functions		*9	① Gas type selection, ② flow rate integration, ③ peak hold, etc.										
Degree of protection			IP40 or equivalent (IEC standard)										
Protection circuit		*10	Power supply reverse connection protection										
Vibration resistance		*11	10 to 150 Hz, 100 m/s^2, 2 hours each in X, Y, Z directions										
EMC Directive			EN55011, EN61000-6-2, EN61000-4-2/3/4/6/8										
Mounting		Mounting orientation *12	Unrestricted in vertical/horizontal direction										
		Straight piping section *13	Not required										

* Refer to page 1112 for communication specifications.

*1: The value converted to volumetric flow rate at standard condition (20°C 1 barometric pressure (101 kPa) 65%RH)
(20°C, 1 atmospheric pressure (101 kPa), 0%RH with a type of gas other than air.)

*2: Use dry gas which does not contain corrosive elements such as chlorine, sulfur or acids, and which is clean and does not contain dust or oil mist. When using compressed air, use clean air that complies with JIS B 8392-1:2012 Class 1.1.1 to 1.6.2. Compressed air from the compressor contains drainage (water, oil oxides, foreign matter, etc.). To maintain the function of this product, install a filter, air dryer (min. pressure dew point 10˚C or less), and oil mist filter (max. oil content 0.1 mg/m^3) on the primary side (upstream side) of this product. (Refer to page 1118 for details on recommended circuit.)

*3: Compressed air is used for adjusting and inspecting this product. Accuracy for gas types other than air is a guideline.

*4: Accuracy is based on a CKD standard flow rate meter. It does not indicate absolute accuracy.
Repeatability, temperature characteristics, and pressure characteristics are not included for an accuracy of ±3% F.S.
Consider separately according to the working environment and working conditions.

*5: Repeatability calculated during a short time. Change over time is not included. (Refer to the product specifications for details.)

*6: The actual response time changes depending on the piping conditions.

*7: Current for when 24 VDC is connected, and no load is applied. The current consumption will vary depending on how the load is connected.

*8: The male end is straight, and the female end is angled. (Refer to page 1114.)
Tighten the M12 connector at a torque of 0.5 N·m or less.
Note, however, that using excessive force to tighten the connector can cause it to break.

*9: The gas type switching function enables switching to argon, carbon dioxide and a gas mixture of argon 80% + carbon dioxide 20%.
The measurement flow rate ranges after switching are as follows. (Note that the 500 L/min and 1,000 L/min models do not have a gas change function.)

Gas type	Flow direction	Measurement flow rate range (□/min)							
		005	010	020	100	200	500	101	201
• Air • Nitrogen • Argon • Argon 80% + carbon dioxide 20%	Uni-direction	15 to 500 mL	30 to 1000 mL	0.06 to 2.00 L	0.30 to 10.00 L	0.6 to 20.0 L	1.5 to 50.0 L	3.0 to 100.0 L	6 to 200 L
	Bi-direction	−500 to −15 mL	−1000 to −30 mL	−2.00 to −0.06 L	−10.00 to −0.30 L	−20.0 to −0.6 L	−50.0 to −1.5 L	−100.0 to −3.0 L	−200 to −6 L
		15 to 500 mL	30 to 1000 mL	0.06 to 2.00 L	0.30 to 10.00 L	0.6 to 20.0 L	1.5 to 50.0 L	3.0 to 100.0 L	6 to 200 L
• Carbon dioxide	Uni-direction	15 to 250 mL	30 to 500 mL	0.06 to 1.00 L	0.30 to 5.00 L	0.6 to 10.0 L	1.5 to 25.0 L	3.0 to 50.0 L	6 to 100 L
	Bi-direction	−250 to −15 mL	−500 to −30 mL	−1.00 to −0.06 L	−5.00 to −0.30 L	−10.0 to −0.6 L	−25.0 to −1.5 L	−50.0 to −3.0 L	−100 to −6 L
		15 to 250 mL	30 to 500 mL	0.06 to 1.00 L	0.30 to 5.00 L	0.6 to 10.0 L	1.5 to 25.0 L	3.0 to 50.0 L	6 to 100 L

The integrating flow is a reference value.
When using the integrated save function, take care to prevent the number of saves from exceeding the access count limit of the storage device (1 million times).
(Changes to the settings are counted in number of accesses.)

$$\text{Number of saves} = \frac{\text{Usage time}}{5\ \text{mins}} < 1\ \text{million times}$$

*10: This product's protection circuit is effective only for specific misconnections and load short-circuits. It does not provide protection for all misconnections.

*11: A communication error might occur depending on the vibration conditions. Install this product as far as possible in a place not subject to vibration.

*12: This product measures changes in heat distribution that are caused by flow.
When this product is mounted in a vertical orientation, convective flow may affect heat distribution or cause the zero point to deviate.

*13: Accuracy may be affected by the piping conditions. To perform measurement with greater accuracy, install a straight pipe with a piping I.D. ten times larger. With the 500 L/min and 1,000 L/min models, use piping with an internal diameter of 9 mm or more. If it is less than 9 mm, accuracy may be negatively affected.

*14: Refer to page 1106 for weight.

How to order

FSM3 - C 005 U 1 BH 1 L 1 N - G H R - P70

- FSM3: Model No.
- C: Ⓐ Display
- 005: Ⓑ Flow rate ranges (full scale)
- U: Ⓒ Flow direction
- 1: Ⓓ Body material / applicable fluid
- BH: Ⓔ Port size
- 1: Ⓕ Piping direction
- L: Ⓖ Output specifications
- 1: Ⓗ Unit specifications
- N: Ⓘ Valve option
- G: Ⓙ Lead wire
- H: Ⓚ Mounting (not assembled)
- R: Ⓛ Attached documents
- P70: Ⓜ Clean-room specifications

Code	Description
Ⓐ Display	
C	IO-Link

Ⓑ Flow rate ranges (full scale)

005	500 mL/min	**500**	50 L/min
010	1000 mL/min	**101**	100 L/min
020	2 L/min	**201**	200 L/min
050	5 L/min	**501**	500 L/min
100	10 L/min	**102**	1000 L/min
200	20 L/min		

Ⓒ Flow direction

U	Uni-direction
B	Bi-direction

Ⓓ Body material / applicable fluid

	Body material	Applicable fluid
1	Resin	Air (gas switchable)

Ⓔ Port size

BH	Push-in (for ø4 mm tube)	**AF**	G1/8	*2
CH	Push-in (for ø6 mm tube)	**BF**	G1/4	*2
DH	Push-in (for ø8 mm tube)	**CF**	G1/2	*2
EH	Push-in (for ø10 mm tube)	**AB**	G1/8	*3
HH	Push-in (for ø1/4" tube)	**BB**	G1/4	*3
JH	Push-in (for ø3/8" tube)	**CB**	G1/2	*3
AA	Rc1/8	**AC**	NPT1/8	
BA	Rc1/4	**BC**	NPT1/4	
CA	Rc1/2	**CC**	NPT1/2	

Ⓕ Piping direction

1	Straight	
2	Elbow	*4

Ⓖ Output specifications

L	IO-Link communication

Ⓗ Unit specifications

1	SI units only

Ⓘ Valve option

N	None

Ⓙ Lead wire

Blank	None
G	M12 both-end lead wire with connector (3 m)

Ⓚ Mounting (not assembled) *5, *6

Blank	None
H	Bracket 1 (for models 200 L or less)
J	Bracket 2 (for 500 or 1000 L models)
M	DIN rail mounting (for models 200 L or less)

Ⓛ Attached documents

Blank	None
R	Company certification
S	Company certification + Traceability certification

Ⓜ Clean-room specifications

P70	Anti-dust generation	*7
P80	Oil free	*8

[Example of model No.]

FSM3-C005U1BH1L1N-GHR-P70

Model: RAPIFLOW FSM3 Series

Ⓐ Display	C	: IO-Link
Ⓑ Flow rate	005	: 500 mL/min
Ⓒ Flow direction	U	: Uni-direction
Ⓓ Body material / applicable fluid	1	: Resin/air
Ⓔ Port size	BH	: Push-in (ø4 mm for tube)
Ⓕ Piping direction	1	: Straight
Ⓖ Output specifications	L	: IO-Link
Ⓗ Unit specifications	1	: SI units only
Ⓘ Valve option	N	: None
Ⓙ Lead wire	G	: M12 both-end lead wire with connector (3 m)
Ⓚ Mounting attachment	H	: Bracket
Ⓛ Attached documents	R	: Company certification
Ⓜ Clean-room specifications	P70	: Anti-dust generation

Precautions for model No. selection

*1: Refer to the correspondence table on the following page when selecting the model.
*2: The G thread connection shape is compliant with ISO16030 standards.
*3: Please refer to the external dimension diagram (Pages 1070 to 1071) for the G thread connection shape when making a selection. (The G thread connection shape is compliant with JIS B 2351-1, O types.)
*4: Note that if you mount the elbow fitting in an upward position, it will interfere with the connector, and if you mount the elbow fitting in a downward position, it will interfere with the DIN rail mounting.
*5: Note that the bracket mounting position may interfere with the elbow fitting.
*6: Optional parts are provided with the product. They are not assembled with the product.
*7: The product surface is degreased and cleaned before packaging, and heat-sealed into an antistatic bag on a clean bench (Class 1000 or more).
*8: In addition to P70 specifications, wetted section materials are degreased and cleaned.

Flow rate ranges and port sizes

Ⓑ Flow rate codes	Ⓔ Port sizes Ⓕ Piping direction															
	BH1	CH1	DH1	EH1	HH1	JH1	BH2	CH2	DH2	EH2	HH2	JH2	AA1	BA1	CA1	AA2
005	●	●			●		●	●			●		●			●
010	●	●			●		●	●			●		●			●
020	●	●			●		●	●			●		●			●
050	●	●			●		●	●			●		●			●
100	●	●			●		●	●			●		●			●
200	●	●			●		●	●			●		●			●
500		●	●		●			●	●		●		●	●		●
101			●	●		●			●	●		●		●		
201			●	●		●			●	●		●		●		
501															●	
102															●	
	BA2	AF1	BF1	CF1	AF2	BF2	AB1	BB1	CB1	AB2	BB2	AC1	BC1	CC1	AC2	BC2
005		●			●		●			●		●			●	
010		●			●		●			●		●			●	
020		●			●		●			●		●			●	
050		●			●		●			●		●			●	
100		●			●		●			●		●			●	
200		●			●		●			●		●			●	
500	●	●	●		●	●	●	●		●	●	●	●		●	●
101	●		●			●		●			●		●			●
201	●		●			●		●			●		●			●
501				●					●					●		
102				●					●					●		

● : Port size compatibility

Compatibility table of port sizes and clean-room specifications

Ⓜ Clean-room specifications	Ⓔ Port sizes Ⓕ Piping direction															
	BH1	CH1	DH1	EH1	HH1	JH1	BH2	CH2	DH2	EH2	HH2	JH2	AA1	BA1	CA1	AA2
Blank	●	●	●	●	●	●	●	●	●	●	●	●	●	●	●	●
P70	●	●	●	●	●	●	●	●	●	●	●	●	●	●	●	●
P80	●	●					●	●					●	●	●	●
	BA2	AF1	BF1	CF1	AF2	BF2	AB1	BB1	CB1	AB2	BB2	AC1	BC1	CC1	AC2	BC2
Blank	●	●	●	●	●	●	●	●	●	●	●	●	●	●	●	●
P70	●	●	●	●	●	●	●	●	●	●	●	●	●	●	●	●
P80	●	●	●	●	●	●	●	●	●	●	●	●	●	●	●	●

SCPD3
SCM
SSD2
MDC2
SMG
LCM
LCR
LCG
LCX
STM
STG
STR2
MRL2
GRC
Cylinder switch
MN3E MN4E
4GA/B
M4GA/B
MN4GA/B
F.R (module unit)
Clean F.R
Precision R
Press gauge Diff. press gauge
Electro-pneumatic R
Speed controller
Auxiliary valve
Fitting/ tube
Clean air unit
Pressure sensor
Flow rate sensor
Valve for air blow
Ending

Dimensions (IO-Link)

Port sizes: Straight ø4 mm, ø6 mm, ø1/4", Rc1/8, G1/8, NPT1/8

● FSM3−C□□1/BH1/CH1/HH1/AA1/AF1/AB1/AC1-P70/P80 (Full scale flow rates: 500 mL/min, 1, 2, 5, 10, 20, 50 L/min)

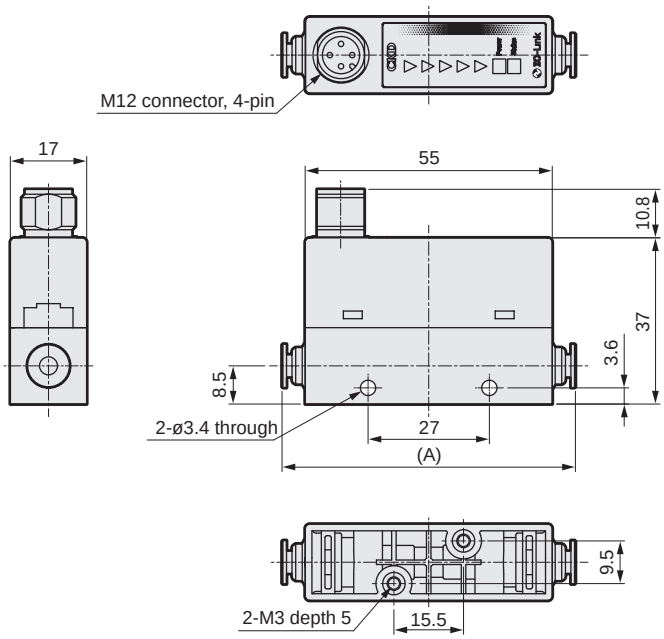

Rc1/8, NPT1/8, G1/8 (AB1)

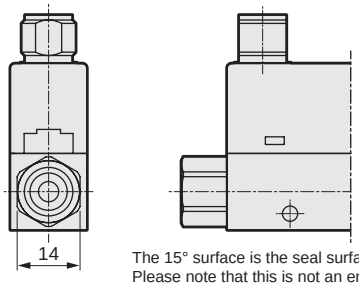

G thread shape (AB)

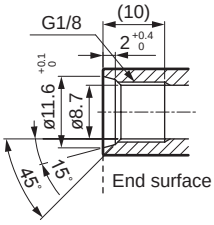

The 15° surface is the seal surface.
Please note that this is not an end face seal. Please also use upon confirming the thread insertion depth of the fitting.

G1/8 (AF1)

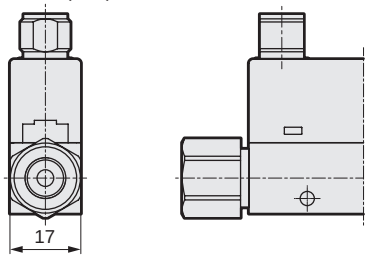

Model No.	Fitting	Dimension (A)
FSM3-C□□1BH1	Push-in ø4 mm	(65)
FSM3-C□□1CH1	Push-in ø6 mm	(67.2)
FSM3-C□□1HH1	Push-in 1/4"	(70.4)
FSM3-C□□1AA1	Rc1/8	(75)
FSM3-C□□1AF1	G1/8	(87)
FSM3-C□□1AB1	G1/8	(87)
FSM3-C□□1AC1	NPT1/8	(75)

Port sizes: Straight ø8 mm, ø10 mm, ø3/8", Rc1/4, G1/4, NPT1/4

● FSM3−C□□1/DH1/EH1/JH1/BA1/BF1/BB1/BC1-P70/P80 (Full scale flow rates: 50, 100, 200 L/min)

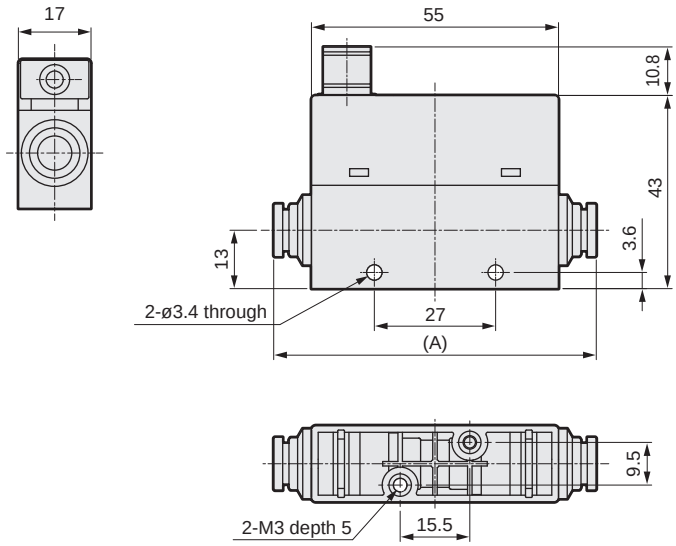

Rc1/4, NPT1/4, G1/4 (BB1)

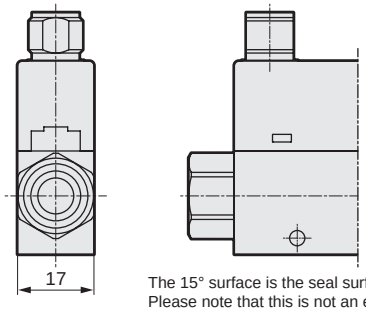

G thread shape (BB)

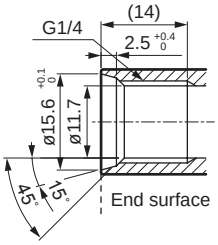

The 15° surface is the seal surface.
Please note that this is not an end face seal. Please also use upon confirming the thread insertion depth of the fitting.

G1/4 (BF1)

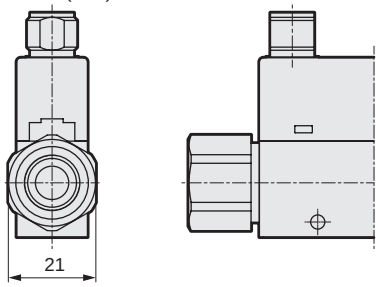

Model No.	Fitting	Dimension (A)
FSM3-C□□1DH1	Push-in ø8 mm	(70.6)
FSM3-C□□1EH1	Push-in ø10 mm	(82.1)
FSM3-C□□1JH1	Push-in 3/8"	(83.4)
FSM3-C□□1BA1	Rc1/4	(75)
FSM3-C□□1BF1	G1/4	(89)
FSM3-C□□1BB1	G1/4	(89)
FSM3-C□□1BC1	NPT1/4	(75)

Dimensions (IO-Link)

Port sizes: Straight Rc1/2, G1/2, NPT1/2

● FSM3−C[B][C]1/CA1/CF1/CB1/CC1-P70/P80 (Full scale flow rates: 500, 1000 L/min)

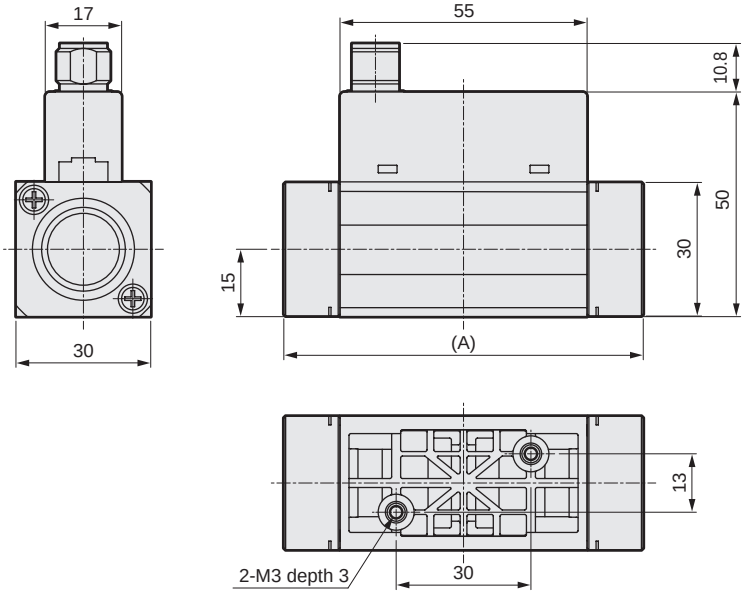

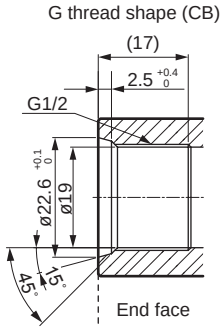

The 15° surface is the seal surface. Please note that this is not an end face seal. Please also use upon confirming the thread insertion depth of the fitting.

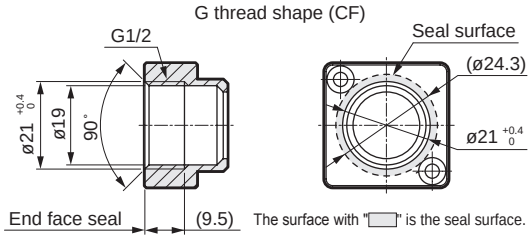

Model No.	Fitting	Dimension (A)
FSM3-C□□1CA1	Rc1/2	(80)
FSM3-C□□1CF1	G1/2	(80)
FSM3-C□□1CB1	G1/2	(95.4)
FSM3-C□□1CC1	NPT1/2	(80)

Port sizes: Elbow ø4 mm, ø6 mm, ø1/4", Rc1/8, G1/8, NPT1/8

● FSM3−C[B][C]1/BH2/CH2/HH2/AA2/AF2/AB2/AC2-P70/P80 (Full scale flow rates: 500 mL/min, 1, 2, 5, 10, 20, 50 L/min)

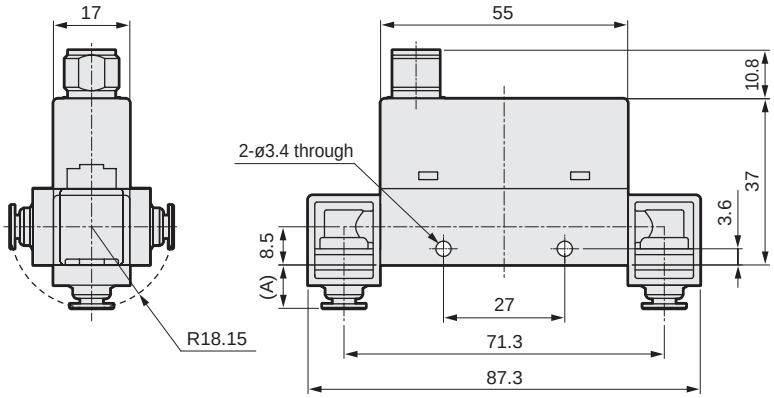

* The shapes of the upper surface and lower surface of the main body are the same as that of the straight type.

Model No.	Fitting	Dimension (A)
FSM3-C□□1BH2	Push-in ø4 mm	(9.5)
FSM3-C□□1CH2	Push-in ø6 mm	(10.6)
FSM3-C□□1HH2	Push-in 1/4"	(12.2)
FSM3-C□□1AA2	Rc1/8	(14.5)
FSM3-C□□1AF2	G1/8 *	(20.5)
FSM3-C□□1AB2	G1/8 *	(20.5)
FSM3-C□□1AC2	NPT1/8	(14.5)

*Please refer to the straight type for the G thread shape.

Port sizes: Elbow ø8 mm, ø10 mm, ø3/8", Rc1/4, G1/4, NPT1/4

● FSM3−C[B][C]1/DH2/EH2/JH2/BA2/BF2/BB2/BC2-P70/P80 (Full scale flow rates: 50, 100, 200 L/min)

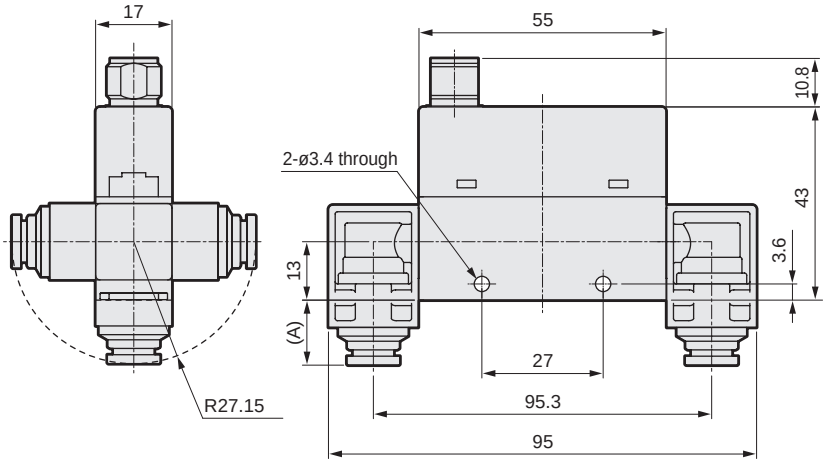

* The shapes of the upper surface and lower surface of the main body are the same as that of the straight type.

Model No.	Fitting	Dimension (A)
FSM3-C□□1DH2	Push-in ø8 mm	(13.6)
FSM3-C□□1EH2	Push-in ø10 mm	(19.3)
FSM3-C□□1JH2	Push-in 3/8"	(20.0)
FSM3-C□□1BA2	Rc1/4	(15.8)
FSM3-C□□1BF2	G1/4 *	(22.8)
FSM3-C□□1BB2	G1/4 *	(22.8)
FSM3-C□□1BC2	NPT1/4	(15.8)

*Please refer to the straight type for the G thread shape.

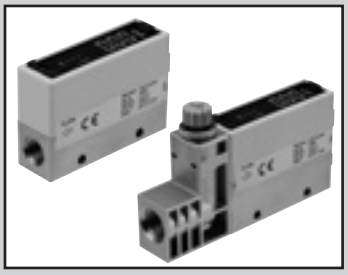

Compact flow rate sensor RAPIFLOW

FSM3 Series

LCD display

● Stainless steel body (flow rate range: 500 mL/min to 1000 L/min)

LCD display specifications

Item			FSM3-[A][B][C][D][E][F][G][H][I]-[ ]										
			[B]										
			005	010	020	050	100	200	500	101	201	501	102
Flow direction	[C]	U	Uni-direction										
		B	Bi-direction										
Measurement flow rate range (□/min) *1	[B]	U	15 to 500 mL	30 to 1000 mL	0.06 to 2.00 L	0.15 to 5.00 L	0.30 to 10.00 L	0.6 to 20.0 L	1.5 to 50.0 L	3.0 to 100.0 L	6 to 200 L	15 to 500 L	30 to 1000 L
		B	−500 to −15, 15 to 500 mL	−1000 to −30, 30 to 1000 mL	−2.00 to −0.06, 0.06 to 2.00 L	−5.00 to −0.15, 0.15 to 5.00 L	−10.00 to −0.30, 0.30 to 10.00 L	−20.0 to −0.6, 0.6 to 20.0 L	−50.0 to −1.5, 1.5 to 50.0 L	−100.0 to −3.0, 3.0 to 100.0 L	−200 to −6, 6 to 200 L	−500 to −15, 15 to 500 L	−1000 to −30, 30 to 1000 L
Display			4 digit + 4 digit 2 color LCD										
Flow rate display range (□/min) *2	[B]	U	−49 to 549 mL	−99 to 1099 mL	−0.19 to 2.19 L	−0.49 to 5.49 L	−0.99 to 10.99 L	−1.9 to 21.9 L	−4.9 to 54.9 L	−9.9 to 109.9 L	−19 to 219 L	−49 to 549 L	−99 to 1099 L
		B	−549 to 549 mL	−1099 to 1099 mL	−2.19 to 2.19 L	−5.49 to 5.49 L	−10.99 to 10.99 L	−21.9 to 21.9 L	−54.9 to 54.9 L	−109.9 to 109.9 L	−219 to 219 L	−549 to 549 L	−1099 to 1099L
Integration display *3		Display range	0 to ±9999999 mL		0.00 to ±99999.99 L			0.0 to ±999999.9 L			0 to ±9999999 L		
		Pulse output rate	5 mL	10 mL	0.02 L	0.05 L	0.1 L	0.2 L	0.5 L	1 L	2 L	5 L	10 L
Working conditions		Applicable fluid *4	Clean air (JIS B 8392-1:2012 1.1.1 to 5.6.2), compressed air (JIS B 8392-1:2012 1.1.1 to 1.6.2), nitrogen gas										
			Argon, carbon dioxide, and gas mixture (argon + carbon dioxide)									–	
			Oxygen (When oxygen specifications are selected, the clean-room specifications of Ⓜ cannot be selected. Specifications automatically become oil-prohibited specifications.)									–	
		Temperature range	0 to 50°C (no condensation)										
		Pressure range	−0.09 to 1.00 MPa									−0.09 to 0.75 MPa	
		Proof pressure	1.5 MPa										
Operating ambient temperature/humidity			0 to 50°C, 90% RH or less										
Storage temperature			−10 to 60°C										
Accuracy *5 (Fluid: in dry air)		Accuracy *6	Within ±3% F.S. (Secondary side released to atmosphere) (The scope of warranty is in accordance with the "measurement flow rate range.")										
		Repeatability *7	Within ±1% F.S. (Secondary side released to atmosphere)										
		Temperature characteristics	Within ±0.2% F.S./°C (15 to 35°C, base temperature 25°C)										
		Pressure characteristics	Within ±5% F.S. (where secondary side is released to atmosphere)								Within ±5% F.S. (0.35 MPa standard)		
Response time *8			50 msec or less (setting response time OFF)										
Switch output	[G]	A, B, E, F	NPN open collector output (50 mA or less, voltage drop 2.4 V or less)										
		C, D, G, H	PNP open collector output (50 mA or less, voltage drop 2.4 V or less)										
Analog output *9		A, B, C, D	1 to 5 V voltage output (connecting load impedance 50 kΩ or more)										
		E, F, G, H	4 to 20 mA current output (connecting load impedance 0 to 300 Ω)										
Power supply voltage *10		A, B, C, D	12 to 24 VDC (10.8 to 26.4 V) ripple rate 1% or less										
		E, F, G, H	24 VDC (21.6 to 26.4 V) ripple rate 1% or less										
Current consumption *11			45 mA or less										
Lead wire			ø3.7, AWG26 or equivalent x 5-conductor (connector), insulator O.D. ø1.0										
Functions *12			① Gas type selection, ② Setting copy function, ③ Flow rate integration, ④ Peak hold, etc.										
Degree of protection			IP40 or equivalent (IEC standard)										
Protection circuit *13			Power reverse connection protection, switch output reverse connection protection, switch output load short-circuit protection										
Vibration resistance			10 to 150 Hz, 100 m/s^2, 2 hours each in X, Y, Z directions										
EMC Directive			EN55011, EN61000-6-2, EN61000-4-2/3/4/6/8										
Mounting		Mounting orientation *14	Unrestricted in vertical/horizontal direction										
		Straight piping section *15	Not required										

*1: The value converted to volumetric flow rate at standard condition (20°C 1 barometric pressure (101 kPa) 65%RH).
(20°C, 1 atmospheric pressure (101 kPa), relative humidity 0%RH with a type of gas other than air.)

*2: Display at each flow rate is as follows.

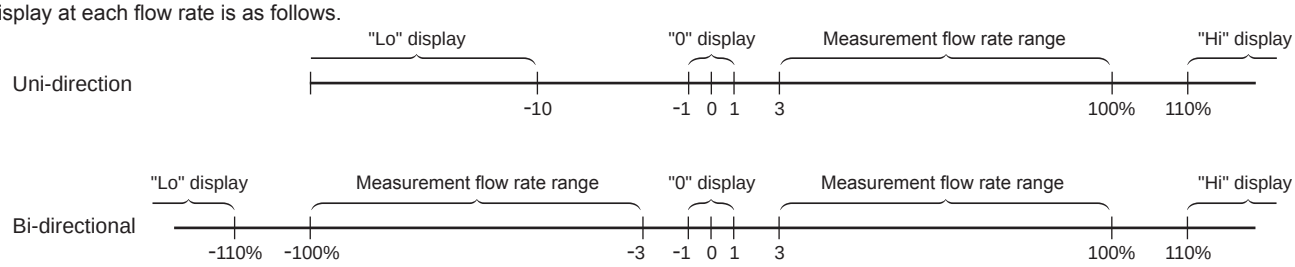

*3: The integrated flow is a calculated (reference) value. When using the integrated save function, take care to prevent the number of saves from exceeding the access count limit of the storage device (1 million times). (Changes to various settings also are counted in the access count.)

$$\text{Number of saves} = \frac{\text{Usage time}}{\text{5 mins}} < \text{1 million times}$$

When the instantaneous flow rate is 1% or less, the flow rate is counted as integrated flow rate.

*4: Use dry gas which does not contain corrosive elements such as chlorine, sulfur or acids, and which is clean and does not contain dust or oil mist. When using compressed air, use clean air that complies with JIS B 8392-1:2012 Class 1.1.1 to 1.6.2. Compressed air from the compressor contains drainage (water, oil oxides, foreign matter, etc.). To maintain the function of this product, install a filter, air dryer (min. pressure dew point 10˚C or less), and oil mist filter (max. oil content 0.1 mg/m^3) on the primary side (upstream side) of this product. (Refer to page 1118 for details on recommended circuit.)
The sensor for oxygen gas is a custom model. To prevent ignition accidents, do not allow oxygen to flow again when a fluid other than oxygen has flown even once.

*5: Compressed air is used for adjusting and inspecting this product. Accuracy for gas types other than air is a guideline.

*6: Accuracy is based on a CKD standard flow rate meter. It does not indicate absolute accuracy.
Repeatability, temperature characteristics, and pressure characteristics are not included for an accuracy of ±3% F.S.
Consider separately according to the working environment and working conditions.

*7: Repeatability calculated during a short time. Change over time is not included. (Refer to the product specifications for details.)

*8: The actual response time changes depending on the piping conditions. As a guideline, the response time setting can be selected within the range 50 msec to 1.5 sec.

*9: The output impedance of the output impedance of the analog output voltage output is approximately 1 kΩ. If the impedance of the connecting load is small, output and error increase. Check error with the impedance of the connecting load before using.

*10: The power supply voltage specifications differ for the voltage output and current output types.

*11: Current for when 24 VDC is connected, and no load is applied. The current consumption will vary depending on how the load is connected.

*12: The gas type switching function enables switching to argon, carbon dioxide and a gas mixture of argon 80% + carbon dioxide 20%. The full scale flow rate and analog output after changing are as follows. (Note that the gas change function cannot be set with the 500 L/min, and 1000 L/min oxygen models.)

Gas	Flow direction	Measured flow rate range (□/min)							
		005	010	020	100	200	500	101	201
・Air ・Nitrogen ・Argon ・Argon80%+ Carbon dioxide20%	Uni-direction	15 to 500mL	30 to 1000mL	0.06 to 2.00L	0.30 to 10.00L	0.6 to 20.0L	1.5 to 50.0L	3.0 to 100.0L	6 to 200L
	Bi-direction	-500 to -15mL	-1000 to -30mL	-2.00 to -0.06L	-10.00 to -0.30L	-20.0 to -0.6L	-50.0 to -1.5L	-100.0 to -3.0L	-200 to -6L
		15 to 500mL	30 to 1000mL	0.06 to 2.00L	0.30 to 10.00L	0.6 to 20.0L	1.5 to 50.0L	3.0 to 100.0L	6 to 200L
・Carbon dioxide	Uni-direction	15 to 250mL	30 to 500mL	0.06 to 1.00L	0.30 to 5.00L	0.6 to 10.0L	1.5 to 25.0L	3.0 to 50.0L	6 to 100L
	Bi-direction	-250 to -15mL	-500 to -30mL	-1.00 to 0.06L	-5.00 to 0.30L	-10.0 to -0.6L	-25.0 to -1.5L	-50.0 to -3.0L	-100 to -6L
		15 to 250mL	30 to 500mL	0.06 to 1.00L	0.30 to 5.00L	0.6 to 10.0L	1.5 to 25.0L	3.0 to 50.0L	6 to 100L

Gas	Flow direction	Analog output			
		Output A		Output B	
		Voltage	Current	Voltage	Current
・Carbon dioxide	Uni-direction	1 to 3V	4 to 12mA	1 to 5V	4 to 20mA
	Bi-direction	2 to 4V	8 to 16mA	1 to 5V	4 to 20mA

The "Setting copy function" setting is selected at "Ⓖ Output specifications".
Note that the "External input" function is not available on models on which the "Setting copy function" is enabled.

*13: This product's protection circuit is effective only for specific misconnections and load short-circuits. It does not provide protection for all misconnections.

*14: This product measures changes in heat distribution that are caused by flow.
When this product is mounted in a vertical orientation, convective flow may affect heat distribution or cause the zero point to deviate.

*15: Accuracy may be affected by the piping conditions. To perform measurement with greater accuracy, install a straight pipe with a piping I.D. ten times larger. With the 500 L/min and 1,000 L/min models, use piping with an internal diameter of 9 mm or more. If it is less than 9 mm, accuracy may be negatively affected.

*16: Refer to page 1106 for weight.

How to order

FSM3 - L 005 U 2 AA 1 A 1 N - B M R - P80

- FSM3: Model No.
- L: Ⓐ Display
- 005: Ⓑ Flow rate ranges (full scale)
- U: Ⓒ Flow direction
- 2: Ⓓ Body material / applicable fluid
- AA: Ⓔ Port size
- 1: Ⓕ Piping direction
- A: Ⓖ Output specifications
- 1: Ⓗ Unit specifications
- N: Ⓘ Valve option
- B: Ⓙ Lead wire
- M: Ⓚ Mounting (not assembled)
- R: Ⓛ Attached documents
- P80: Ⓜ Clean-room specifications

Code	Description
Ⓐ Display	
L	Liquid crystal display

Ⓑ Flow rate ranges (full scale)

005	500 mL/min	500	50 L/min
010	1000 mL/min	101	100 L/min
020	2 L/min	201	200 L/min
050	5 L/min	501	500 L/min
100	10 L/min	102	1000 L/min
200	20 L/min		

Ⓒ Flow direction *2

U	Uni-direction
B	Bi-direction

Ⓓ Body material / applicable fluid

	Body material	Applicable fluid
2	SUS	Air (gas switchable)
3	SUS	Oxygen (oil-prohibited specifications) *3

Ⓔ Port size

AA	Rc1/8	
BA	Rc1/4	
CA	Rc1/2	
AF	G1/8	*4
BF	G1/4	*4
CF	G1/2	*4
AB	G1/8	*5
BB	G1/4	*5
CB	G1/2	*5
AC	NPT1/8	
BC	NPT1/4	
CC	NPT1/2	
AD	1/4" double barbed fitting (50 L/min or less)	
BD	1/4" double barbed fitting (50 to 200 L/min)	
AE	1/4" JXR male fitting (50 L/min or less)	
BE	1/4" JXR male fitting (50 to 200 L/min)	

Ⓕ Piping direction

1	Straight

Ⓖ Output specifications

	Analog output	Switch output	Setting copy function
A	1 point (Voltage output) 1-5 V	1 point (NPN)	With
B		2 points (NPN)	–
C		1-point output (PNP)	With
D		2-points output (PNP)	–
E	1 point (Current output) 4-20 mA	1 point (NPN)	With
F		2 points (NPN)	–
G		1-point output (PNP)	With
H		2-points output (PNP)	–

Ⓗ Unit specifications

1	SI units only
2	With unit switching function (overseas models only) *6

Ⓘ Valve option *2, *10

N	None
T	With needle valve (only for models 200 L or less)

Ⓙ Lead wire

Blank	None
A	5-conductor 1 m
B	5-conductor 3 m

Ⓚ Mounting (not assembled) *7

Blank	None
H	Bracket 1 (for models 200 L or less)
J	Bracket 2 (for 500 or 1000 L models)
K	Panel mounting (for sensor products of models 200 L or less)
L	Panel mounting (for needle valves of models 200 L or less)
M	DIN rail mounting (for models 200 L or less)

Ⓛ Attached documents

Blank	None
R	Company certification
S	Company certification + Traceability certification

Ⓜ Clean-room specifications *10

P70	Anti-dust generation	*8
P80	Oil free	*9

[Example of model No.]

FSM3-L005U2AA1A1N-BMR-P80

Model: RAPIFLOW FSM3 Series

Ⓐ Display	L	: Liquid crystal display
Ⓑ Flow rate	005	: 500 mL/min
Ⓒ Flow direction	U	: Uni-direction
Ⓓ Body material / applicable fluid	2	: SUS/air
Ⓔ Port size	AA	: Rc1/8
Ⓕ Piping direction	1	: Straight
Ⓖ Output specifications	A	: Analog voltage output ×1, NPN switch output ×1, setting copy function
Ⓗ Unit specifications	1	: SI units only
Ⓘ Valve option	N	: None
Ⓙ Lead wire	B	: 5-conductor 3 m
Ⓚ Mounting attachment	M	: DIN rail mount
Ⓛ Attached documents	R	: Company certification
Ⓜ Clean-room specifications	P80	: Oil free

Precautions for model No. selection

*1: Refer to the correspondence table on the following page when selecting the model.
*2: The only Ⓘ valve option is "N: None" with models where the flow direction is "B: Bidirectional" and models where the applicable fluid is oxygen.
*3: "3: Oxygen" cannot be selected with 500 L/min and 1000 L/min models.
*4: The G thread connection shape is compliant with ISO16030 standards.
*5: Please refer to the external dimension diagram (Page 1076) for the G thread connection shape when making a selection. (The G thread connection shape is compliant with JIS B 2351-1, O types.)
*6: Models with the unit switching function are not sold in Japan.
*7: Optional parts are provided with the product. They are not assembled to the product.
*8: The product surface is degreased and cleaned before packaging, and heat-sealed into an antistatic bag on a clean bench (Class 1000 or more).
*9: In addition to P70 specifications, wetted section materials are degreased and cleaned.
*10: No oxygen type can be selected (None only).

Flow rate ranges and port sizes

Ⓑ Flow rate codes	Ⓔ Port sizes															
	AA	BA	CA	AF	BF	CF	AB	BB	CB	AC	BC	CC	AD	BD	AE	BE
	Rc1/8	Rc1/4	Rc1/2	G1/8	G1/4	G1/2	G1/8	G1/4	G1/2	NPT1/8	NPT1/4	NPT1/2	1/4" Double barbed fitting		1/4" JXR Male fitting	
005	●○			●○			●○			●○			●○		●○	
010	●○			●○			●○			●○			●○		●○	
020	●○			●○			●○			●○			●○		●○	
050	●○			●○			●○			●○			●○		●○	
100	●○			●○			●○			●○			●○		●○	
200	●○			●○			●○			●○			●○		●○	
500	●○	●○		●○	●○		●○	●○		●○	●○		●○	●○	●○	●○
101		●○			●○			●○			●○			●○		●○
201		●○			●○			●○			●○			●○		●○
501			●			●			●			●				
102			●			●			●			●				

●: Port size compatibility ○: Needle valve option compatibility

SCPD3
SCM
SSD2
MDC2
SMG
LCM
LCR
LCG
LCX
STM
STG
STR2
MRL2
GRC
Cylinder switch
MN3E MN4E
4GA/B
M4GA/B
MN4GA/B
F.R (module unit)
Clean F.R
Precision R
Press gauge Diff. press gauge
Electro-pneumatic R
Speed controller
Auxiliary valve
Fitting/ tube
Clean air unit
Pressure sensor
Flow rate sensor
Valve for air blow
Ending

Dimensions (LCD display) (flow rate range: 500 mL/min to 50 L/min)

Port sizes: Straight Rc1/8, G1/8, NPT1/8

● FSM3−L[B][C]$^{2}_{3}$/AA1/AB1/AC1-P70/P80

(Full scale flow rates: 500 mL/min, 1, 2, 5, 10, 20, 50 L/min)

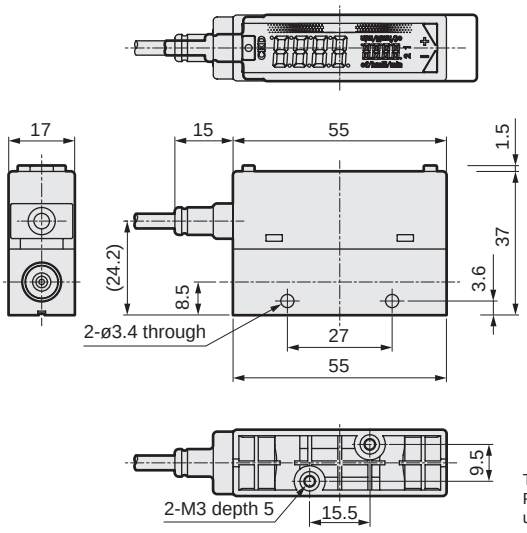

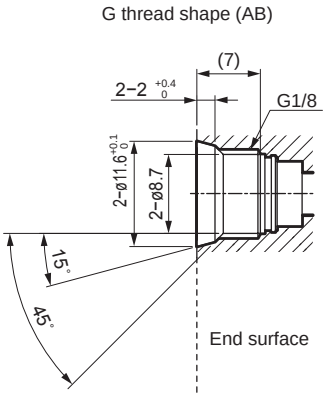

The 15° surface is the seal surface.
Please note that this is not an end face seal. Please also use upon confirming the thread insertion depth of the fitting.

Port size: Straight G1/8

● FSM3−L[B][C]$^{2}_{3}$/AF1

(Full scale flow rates: 500mL/min, 1, 2, 5, 10, 20, 50L/min)

Port size: Straight G1/8 (AF1)

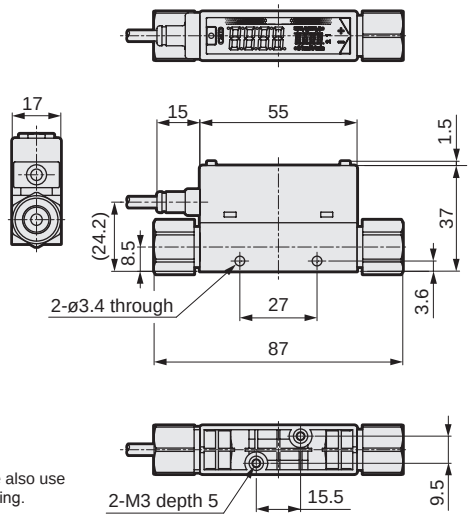

Port size: Straight 1/4" double barbed fitting

● FSM3−L[B][C]$^{2}_{3}$/AD1-P70/P80

(Full scale flow rates: 500 mL/min, 1, 2, 5, 10, 20, 50 L/min)

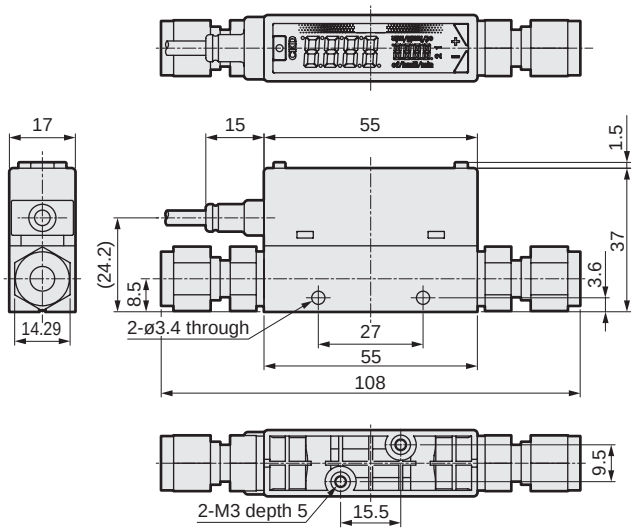

Port size: Straight 1/4" JXR male fitting

● FSM3−L[B][C]$^{2}_{3}$/AE1 (Full scale flow rates: 500 mL/min, 1, 2, 5, 10, 20, 50 L/min)

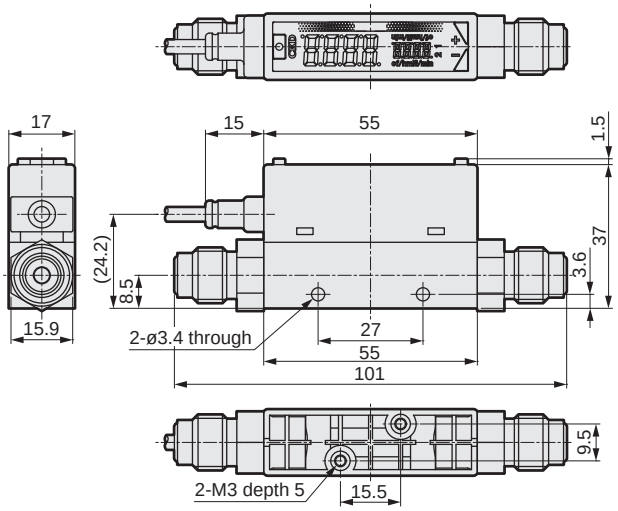

Solenoid valve with needle dimensions

Port sizes: Rc1/8, G1/8, NPT1/8, 1/4" double barbed fitting, 1/4" JXR male fitting

● FSM3−L[B][C]$^{2}_{3}$/AA1AF1/AB1/AC1/AD/AE[G][H]T-P70/P80 (Full scale flow rates: 500 mL/min, 1, 2, 5, 10, 20, 50 L/min)

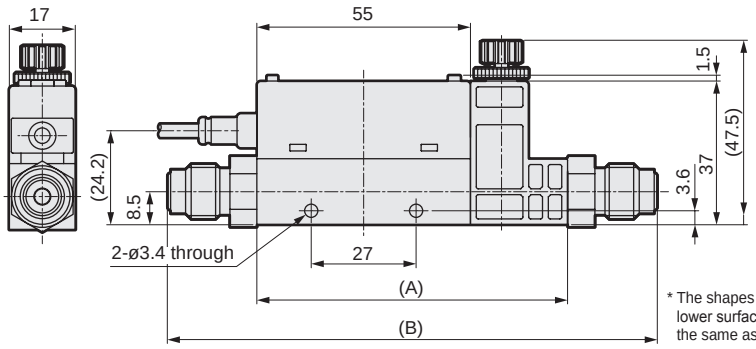

G thread shape (AB *needle valve side)

*Refer to the figure above for the G thread shape (AB) on the sensor side.

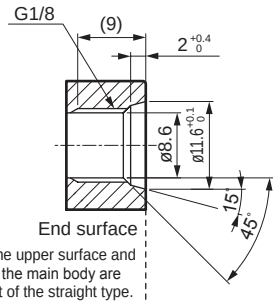

* The shapes of the upper surface and lower surface of the main body are the same as that of the straight type.

The 15° surface is the seal surface. Please note that this is not an end face seal. Please also use upon confirming the thread insertion depth of the fitting.

Port size	Dimension (A)	Dimension (B)
Rc 1/8	80	–
G 1/8 (AF1)	80	132
G 1/8 (AB1)	80	–
NPT 1/8	80	–
1/4" Double barbed fitting	80	133
1/4" JXR male fitting	80	126

Dimensions (LCD display) (flow rate range: 50 L/min to 200 L/min)

Port sizes: Straight Rc1/4, G1/4, NPT1/4

● FSM3−L[B][C]$^{2}_{3}$/BA1/BB1/BC1-P70/P80

(Full scale flow rates: 50, 100, 200 L/min)

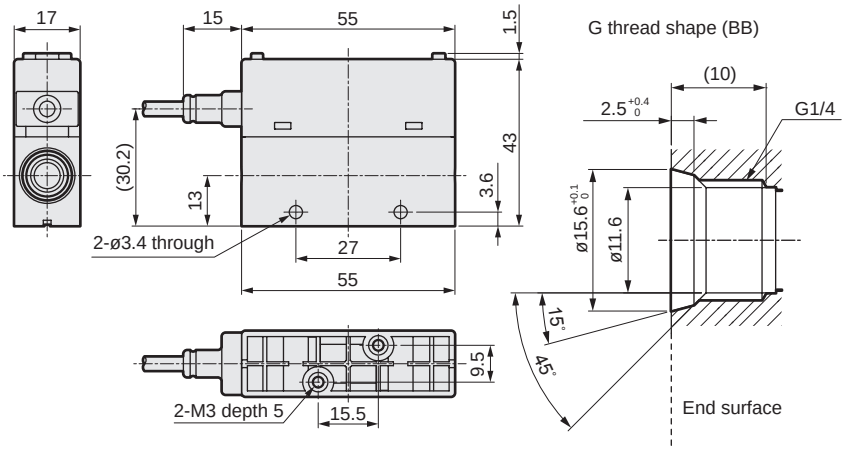

The 15° surface is the seal surface.
Please note that this is not an end face seal. Please also use upon confirming the thread insertion depth of the fitting.

Port size: Straight G1/4 (BF1)

● FSM3−L[B][C]$^{2}_{3}$/BF1

(Full scale flow rates: 50, 100, 200 L/min)

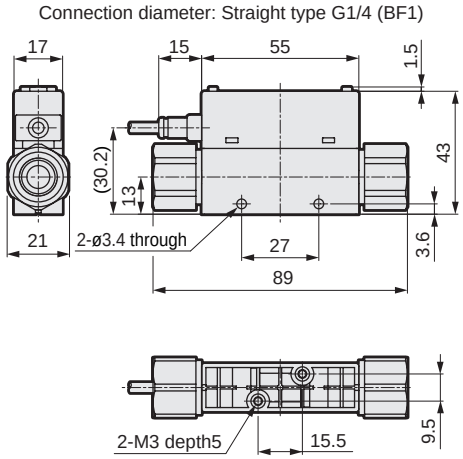

Port size: Straight 1/4" double barbed fitting

● FSM3−L[B][C]$^{2}_{3}$/BD1-P70/P80

(Full scale flow rates: 50, 100, 200 L/min)

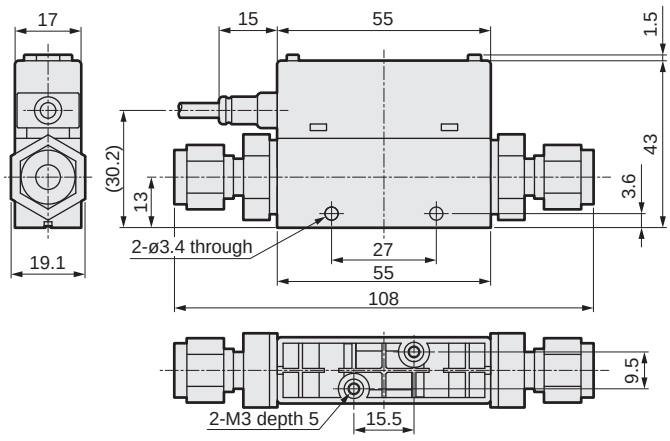

Port size: Straight 1/4" JXR male fitting

● FSM3−L[B][C]$^{2}_{3}$/BE1

(Full scale flow rates: 50, 100, 200 L/min)

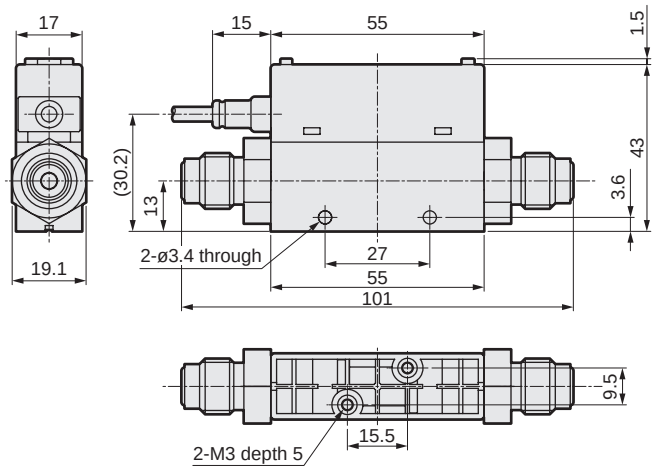

Solenoid valve with needle dimensions

Port sizes: Rc1/4, G1/4, NPT1/4, 1/4" double barbed fitting, 1/4" JXR male fitting

● FSM3−L[B][C]$^{2}_{3}$/BA1/BF1/BB1/BC1/BD/BE[G][H]T-P70/P80 (Full scale flow rates: 50, 100, 200 L/min)

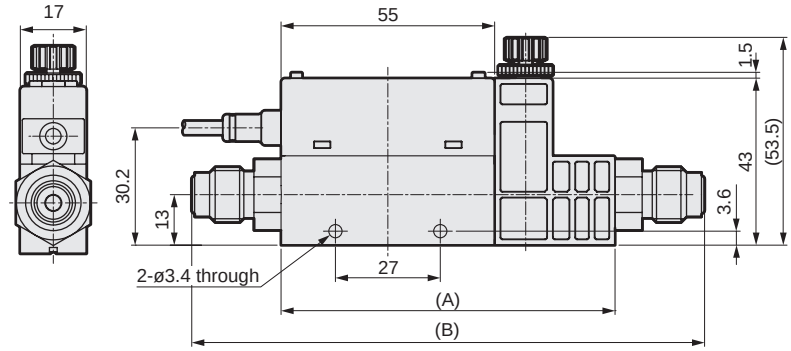

G thread shape (BB *needle valve side)

*Please refer to the diagram above for details on the G thread shape (BB) on the sensor side.

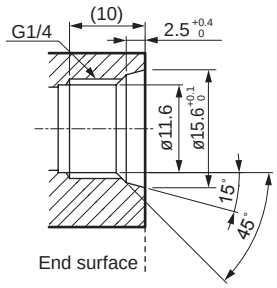

* The shapes of the upper surface and lower surface of the main body are the same as that of the straight type.

The 15° surface is the seal surface. Please note that this is not an end face seal. Please also use upon confirming the thread insertion depth of the fitting.

Port size	Dimension (A)	Dimension (B)
Rc 1/8	86	–
G 1/4 (BF1)	86	120
G 1/4 (BB1)	86	–
NPT 1/4	86	–
1/4" Double barbed fitting	86	139
1/4" JXR male fitting	86	132

SCPD3
SCM
SSD2
MDC2
SMG
LCM
LCR
LCG
LCX
STM
STG
STR2
MRL2
GRC
Cylinder switch
MN3E MN4E
4GA/B
M4GA/B
MN4GA/B
F.R (module unit)
Clean F.R
Precision R
Press gauge Diff. press gauge
Electro-pneumatic R
Speed controller
Auxiliary valve
Fitting/ tube
Clean air unit
Pressure sensor
Flow rate sensor
Valve for air blow
Ending

Dimensions (LCD display) (flow rate range: 500 L/min to 1000 L/min)

Port sizes: Straight Rc1/2, G1/2, NPT1/2

● FSM3−L B C 2/CA1/CF1/CB1/CC1-P70/P80

(Full scale flow rates: 500,1000L/min)

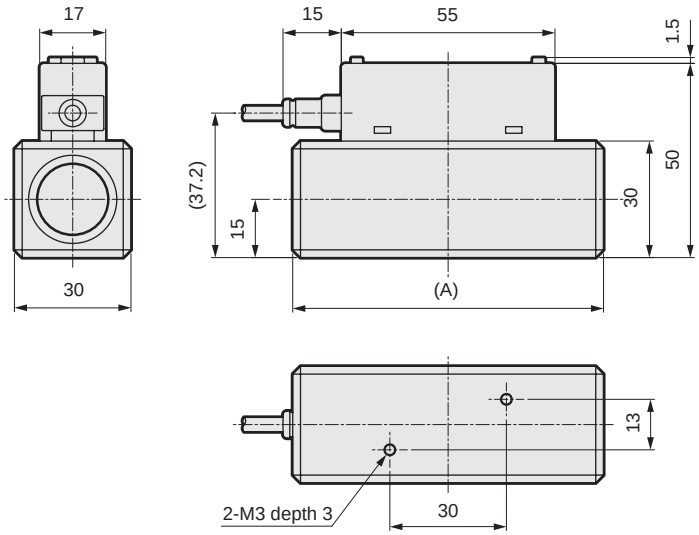

G thread shape (CB)

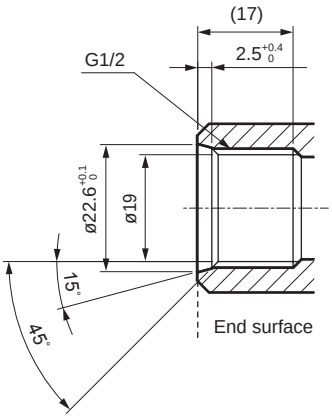

The 15° surface is the seal surface.
Please note that this is not an end face seal. Please also use upon confirming the thread insertion depth of the fitting.

Model No.	Port size	Dimension (A)
FSM3-L□□2CA1	Rc1/2	(80)
FSM3-L□□2CF1	G1/2	(80)
FSM3-L□□2CB1	G1/2	(95.4)
FSM3-L□□2CC1	NPT1/2	(80)

MEMO

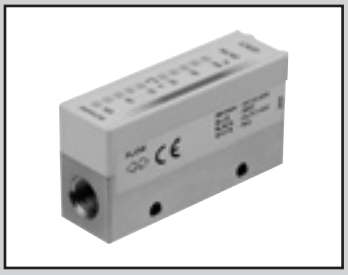

Compact flow rate sensor RAPIFLOW

FSM3 Series

Bar display

● Stainless steel body (flow rate range: 500 mL/min to 1000 L/min)

Bar display specifications

Item			FSM3-[A][B][C][D][E][F][G][H][I]-[ ]										
			[B]										
			005	010	020	050	100	200	500	101	201	501	102
Flow direction	[C]	U	Uni-direction										
		B	Bi-direction										
Measurement flow rate range (□/min) *1	[B]	U	15 to 500 mL	30 to 1000 mL	0.06 to 2.00 L	0.15 to 5.00 L	0.30 to 10.00 L	0.6 to 20.0 L	1.5 to 50.0 L	3.0 to 100.0 L	6 to 200 L	15 to 500 L	30 to 1000 L
		B	−500 to −15, 15 to 500 mL	−1000 to −30, 30 to 1000 mL	−2.00 to −0.06, 0.06 to 2.00 L	−5.00 to −0.15, 0.15 to 5.00 L	−10.00 to −0.30, 0.30 to 10.00 L	−20.0 to −0.6, 0.6 to 20.0 L	−50.0 to −1.5, 1.5 to 50.0 L	−100.0 to −3.0, 3.0 to 100.0 L	−200 to −6, 6 to 200 L	−500 to −15, 15 to 500 L	−1000 to −30, 30 to 1000 L
Display			LED bar display										
Working conditions		Applicable fluid *2	Clean air (JIS B 8392-1:2012 1.1.1 to 5.6.2), compressed air (JIS B 8392-1:2012 1.1.1 to 1.6.2), nitrogen gas										
			Oxygen (When oxygen specifications are selected, the clean-room specifications of Ⓜ cannot be selected. Specifications automatically become oil-prohibited specifications.)									–	
		Temperature range	0 to 50°C (no condensation)										
		Pressure range	−0.09 to 1.00 MPa									−0.09 to 0.75 MPa	
		Proof pressure	1.5 MPa										
Operating ambient temperature/humidity			0 to 50°C, 90% RH or less										
Storage temperature			−10 to 60°C										
Accuracy		Accuracy *3	Within ±3% F.S. (Secondary side released to atmosphere) (The scope of warranty is in accordance with the "measurement flow rate range.")										
		Repeatability *4	Within ±1% F.S. (Secondary side released to atmosphere)										
		Temperature characteristics	Within ±0.2% F.S./°C (15 to 35°C, base temperature 25°C)										
		Pressure characteristics	Within ±5% F.S. (where secondary side is released to atmosphere)								Within ±5% F.S. (0.35 MPa standard)		
Response time		*5	50 msec or less										
Analog output *6	[G]	J	1 to 5 V voltage output (connecting load impedance 50 kΩ or more)										
		K	4 to 20 mA current output (connecting load impedance 0 to 300 Ω)										
Power supply voltage *7		J	12 to 24 VDC (10.8 to 26.4 V) ripple rate 1% or less										
		K	24 VDC (21.6 to 26.4 V) ripple rate 1% or less										
Current consumption		*8	45 mA or less										
Lead wire			ø3.7, AWG26 or equivalent × 4-conductor (connector), insulator O.D. ø1.0										
Degree of protection			IP40 or equivalent (IEC standard)										
Protection circuit		*9	Power supply reverse connection protection										
Vibration resistance			10 to 150 Hz, 100 m/s^2, 2 hours each in X, Y, Z directions										
EMC Directive			EN55011, EN61000-6-2, EN61000-4-2/3/4/6/8										
Mounting		Mounting orientation *10	Unrestricted in vertical/horizontal direction										
		Straight piping section *11	Not required										

*1: The value converted to volumetric flow rate at standard condition (20°C 1 barometric pressure (101 kPa) 65%RH).
(20°C, 1 atmospheric pressure (101kPa), relative humidity 0%RH with a gas other than air.)

*2: Use dry gas which does not contain corrosive elements such as chlorine, sulfur or acids, and which is clean and does not contain dust or oil mist. When using compressed air, use clean air that complies with JIS B 8392-1:2012 Class 1.1.1 to 1.6.2. Compressed air from the compressor contains drainage (water, oil oxides, foreign matter, etc.). To maintain the function of this product, install a filter, air dryer (min. pressure dew point 10˚C or less), and oil mist filter (max. oil content 0.1 mg/m^3) on the primary side (upstream side) of this product. (Refer to page 1118 for details on recommended circuit.)
The sensor for oxygen gas is a custom model. To prevent ignition accidents, do not allow oxygen to flow again when a fluid other than oxygen has flown even once.

*3: Accuracy is based on a CKD standard flow rate meter. It does not indicate absolute accuracy.
Repeatability, temperature characteristics, and pressure characteristics are not included for an accuracy of ±3% F.S.
Consider separately according to the working environment and working conditions.

*4: Repeatability calculated during a short time. Change over time is not included. (Refer to the product specifications for details.)

*5: The actual response time changes depending on the piping conditions.

*6: The output impedance of the output impedance of the analog output voltage output is approximately 1 kΩ. If the impedance of the connecting load is small, output and error increase. Check error with the impedance of the connecting load before using.

*7: The power supply voltage specifications differ for the voltage output and current output types.

*8: Current for when 24 VDC is connected, and no load is applied. The current consumption will vary depending on how the load is connected.

*9: This product's protection circuit is effective only for specific misconnections and load short-circuits. It does not provide protection for all misconnections.

*10: This product measures changes in heat distribution that are caused by flow.
When this product is mounted in a vertical orientation, convective flow may affect heat distribution or cause the zero point to deviate.

*11: Accuracy may be affected by the piping conditions. To perform measurement with greater accuracy, install a straight pipe with a piping I.D. ten times larger. With the 500 L/min and 1,000 L/min models, use piping with an internal diameter of 9 mm or more. If it is less than 9 mm, accuracy may be negatively affected.

*12: Refer to page 1106 for weight.

How to order

FSM3 - B 005 U 2 AA 1 J 1 N - D H S - P70

- FSM3: Model No.
- B: Ⓐ Display
- 005: Ⓑ Flow rate ranges (full scale)
- U: Ⓒ Flow direction
- 2: Ⓓ Body material / applicable fluid
- AA: Ⓔ Port size
- 1: Ⓕ Piping direction
- J: Ⓖ Output specifications
- 1: Ⓗ Unit specifications
- N: Ⓘ Valve option
- D: Ⓙ Lead wire
- H: Ⓚ Mounting (not assembled)
- S: Ⓛ Attached documents
- P70: Ⓜ Clean-room specifications

Code	Description
Ⓐ Display	
B	Bar display

Ⓑ Flow rate ranges (full scale)

005	500 mL/min	**500**	50 L/min
010	1000 mL/min	**101**	100 L/min
020	2 L/min	**201**	200 L/min
050	5 L/min	**501**	500 L/min
100	10 L/min	**102**	1000 L/min
200	20 L/min		

Ⓒ Flow direction

U	Uni-direction
B	Bi-direction

Ⓓ Body material / applicable fluid

	Body material	Applicable fluid
2	SUS	Air
3	SUS	Oxygen (oil-prohibited specifications) *3

Ⓔ Port size

AA	Rc1/8	
BA	Rc1/4	
CA	Rc1/2	
AF	G1/8	*4
BF	G1/4	*4
CF	G1/2	*4
AB	G1/8	*5
BB	G1/4	*5
CB	G1/2	*5
AC	NPT1/8	
BC	NPT1/4	
CC	NPT1/2	
AD	1/4" double barbed fitting (50 L/min or less)	
BD	1/4" double barbed fitting (50 to 200 L/min)	
AE	1/4" JXR male fitting (50 L/min or less)	
BE	1/4" JXR male fitting (50 to 200 L/min)	

Ⓕ Piping direction

1	Straight

Ⓖ Output specifications *2

J	Analog voltage output × 1 point
K	Analog current output × 1 point

Ⓗ Unit specifications

1	SI units only

Ⓘ Valve option

N	None

Ⓙ Lead wire

Blank	None
C	4-conductor 1 m
D	4-conductor 3 m

Ⓚ Mounting (not assembled) *6

Blank	None
H	Bracket 1 (for models 200 L or less)
J	Bracket 2 (for 500 or 1000 L models)
M	DIN rail mounting (for models 200 L or less)

Ⓛ Attached documents

Blank	None
R	Company certification
S	Company certification + Traceability certification

Ⓜ Clean-room specifications *9

P70	Anti-dust generation	*7
P80	Oil free	*8

[Example of model No.]

FSM3-B005U2AA1J1N-DHS-P70

Model: RAPIFLOW FSM3 Series

Ⓐ Display	B	: Bar display
Ⓑ Flow rate	005	: 500 mL/min
Ⓒ Flow direction	U	: Uni-direction
Ⓓ Body material / applicable fluid	2	: SUS/air
Ⓔ Port size	AA	: Rc1/8
Ⓕ Piping direction	1	: Straight
Ⓖ Output specifications	J	: Analog voltage output ×1
Ⓗ Unit specifications	1	: SI units only
Ⓘ Valve option	N	: None
Ⓙ Lead wire	D	: 4-conductor 3 m
Ⓚ Mounting attachment	H	: Bracket
Ⓛ Attached documents	S	: Company certification + Traceability certification
Ⓜ Clean-room specifications	P70	: Anti-dust generation

Precautions for model No. selection

*1: Refer to the correspondence table on the following page when selecting the model.
*2: When using in combination with a separated display (FSM2-D), select "J".
*3: "3: Oxygen" cannot be selected with 500 L/min and 1000 L/min models.
*4: The G thread connection shape is compliant with ISO16030 standards.
*5: Please refer to the external dimension diagram (Page 1084) for the G thread connection shape when making a selection. (The G thread connection shape is compliant with JIS B 2351-1, O types.)
*6: Optional parts are provided with the product. They are not assembled with the product.
*7: The product surface is degreased and cleaned before packaging, and heat-sealed into an antistatic bag on a clean bench (Class 1000 or more).
*8: In addition to P70 specifications, wetted section materials are degreased and cleaned.
*9: This cannot be selected on an oxygen type (blank only).

Flow rate ranges and port sizes

Ⓑ Flow rate codes	Ⓔ Port sizes															
	AA	BA	CA	AF	BF	CF	AB	BB	CB	AC	BC	CC	AD	BD	AE	BE
	Rc1/8	Rc1/4	Rc1/2	G1/8	G1/4	G1/2	G1/8	G1/4	G1/2	NPT1/8	NPT1/4	NPT1/2	1/4" Double barbed fitting		1/4" JXR Male fitting	
005	●			●			●			●			●		●	
010	●			●			●			●			●		●	
020	●			●			●			●			●		●	
050	●			●			●			●			●		●	
100	●			●			●			●			●		●	
200	●			●			●			●			●		●	
500	●	●		●	●		●	●		●	●		●	●	●	●
101		●			●			●			●			●		●
201		●			●			●			●			●		●
501			●			●			●			●				
102			●			●			●			●				

SCPD3
SCM
SSD2
MDC2
SMG
LCM
LCR
LCG
LCX
STM
STG
STR2
MRL2
GRC
Cylinder switch
MN3E MN4E
4GA/B
M4GA/B
MN4GA/B
F.R (module unit)
Clean F.R
Precision R
Press gauge Diff. press gauge
Electro-pneumatic R
Speed controller
Auxiliary valve
Fitting/ tube
Clean air unit
Pressure sensor
Flow rate sensor
Valve for air blow
Ending

Dimensions (bar display) (flow rate range: 500 mL/min to 50 L/min)

Port sizes: Straight Rc1/8, G1/8, NPT1/8

● FSM3−B$\boxed{B}\boxed{C}^{2}_{3}$/AA1/AB1/AC1-P70/P80 (Full scale flow rates: 500 mL/min, 1, 2, 5, 10, 20, 50 L/min)

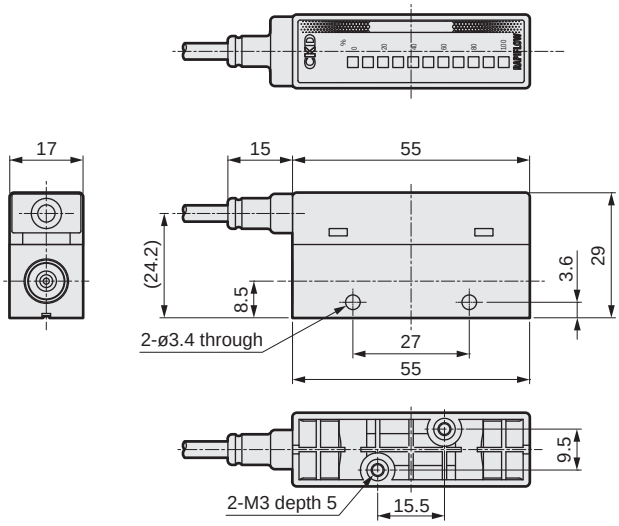

G thread shape (AB)

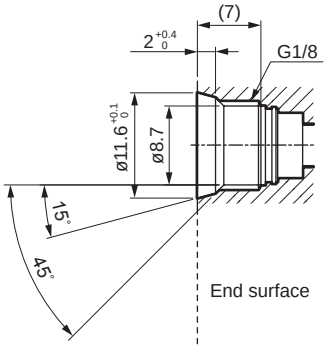

The 15° surface is the seal surface.
Please note that this is not an end face seal. Please also use upon confirming the thread insertion depth of the fitting.

Port size: Straight G1/8

● FSM3−B$\boxed{B}\boxed{C}^{2}_{3}$/AF1-P70/P80 (Full scale flow rates: 500 mL/min, 1, 2, 5, 10, 20, 50 L/min)

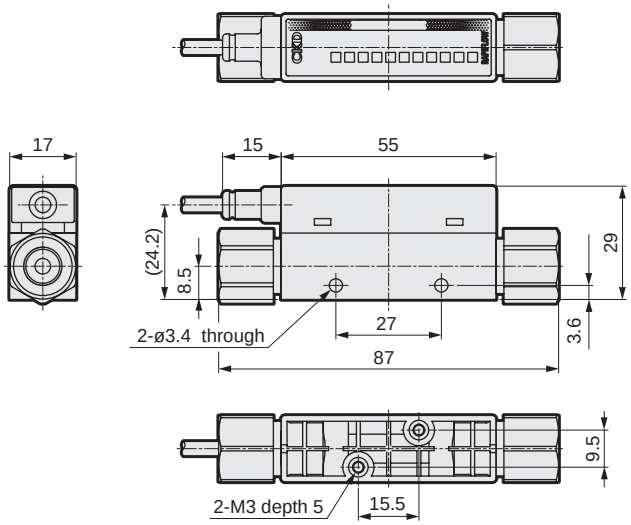

Port size: Straight 1/4" double barbed fitting

● FSM3−B$\boxed{B}\boxed{C}^{2}_{3}$/AD1-P70/P80
(Full scale flow rates: 500 mL/min, 1, 2, 5, 10, 20, 50 L/min)

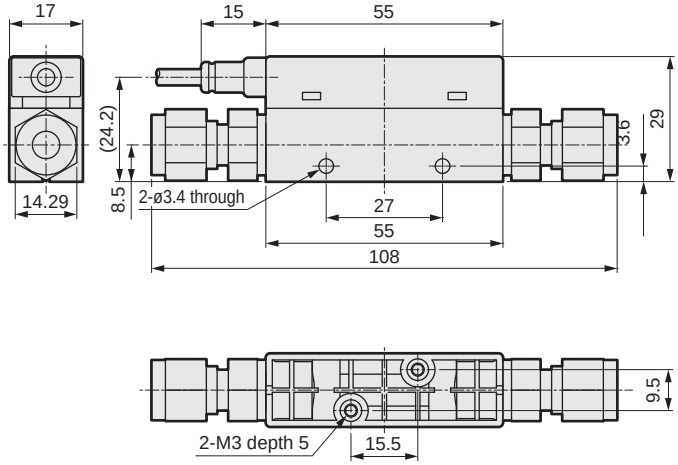

Port size: Straight 1/4" JXR male fitting

● FSM3−B$\boxed{B}\boxed{C}^{2}_{3}$/AE1-P70/P80
(Full scale flow rates: 500 mL/min, 1, 2, 5, 10, 20, 50 L/min)

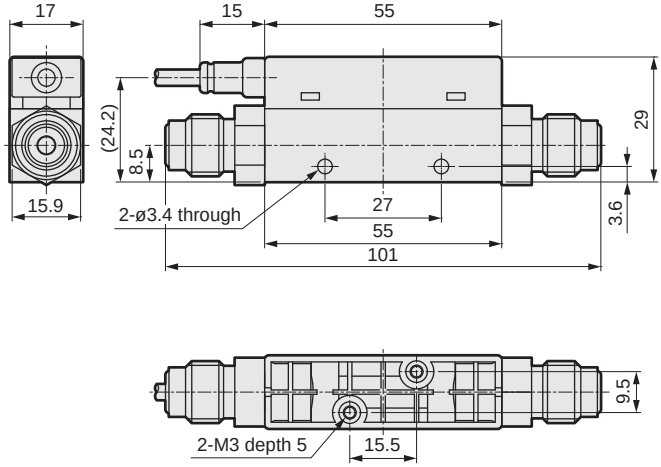

Dimensions (bar display) (flow rate range: 50 L/min to 1000 L/min)

Port sizes: Straight Rc1/4, G1/4, NPT1/4

● FSM3−B$\boxed{B}\boxed{C}^{2}_{3}$/BA1/BB1/BC1-P70/P80 (Full scale flow rates: 50, 100, 200 L/min)

G thread shape (BB)

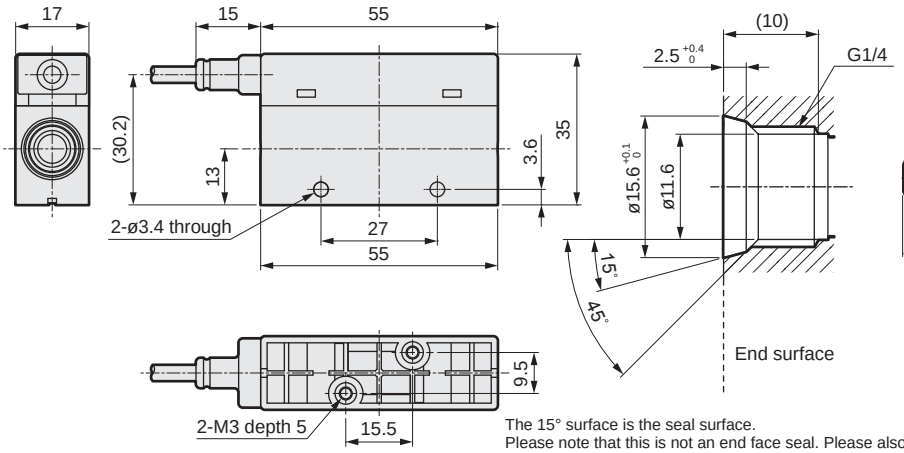

The 15° surface is the seal surface.
Please note that this is not an end face seal. Please also use upon confirming the thread insertion depth of the fitting.

Port size: Straight G1/4

● FSM3−B$\boxed{B}\boxed{C}^{2}_{3}$/BF1-P70/P80
(Full scale flow rates: 50, 100, 200 L/min)

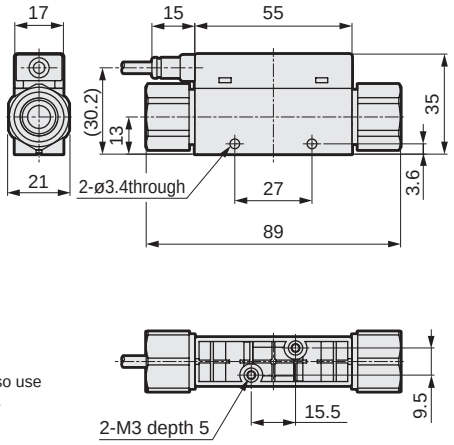

Port size: Straight 1/4" double barbed fitting

● FSM3−B$\boxed{B}\boxed{C}^{2}_{3}$/BD1-P70/P80 (Full scale flow rates: 50, 100, 200 L/min)

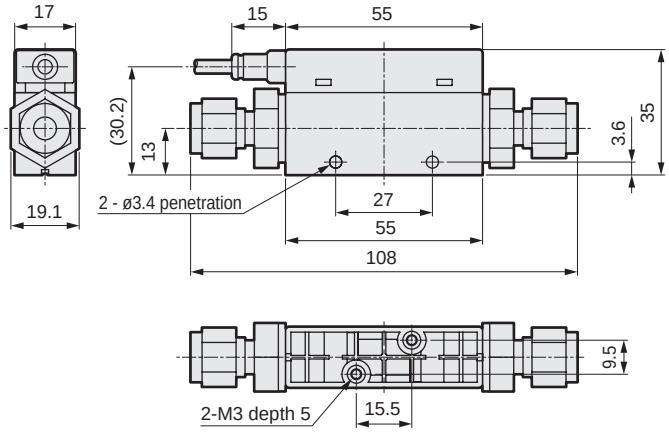

Port size: Straight 1/4" JXR male fitting

● FSM3−B$\boxed{B}\boxed{C}^{2}_{3}$/BE1-P70/P80 (Full scale flow rates: 50, 100, 200 L/min)

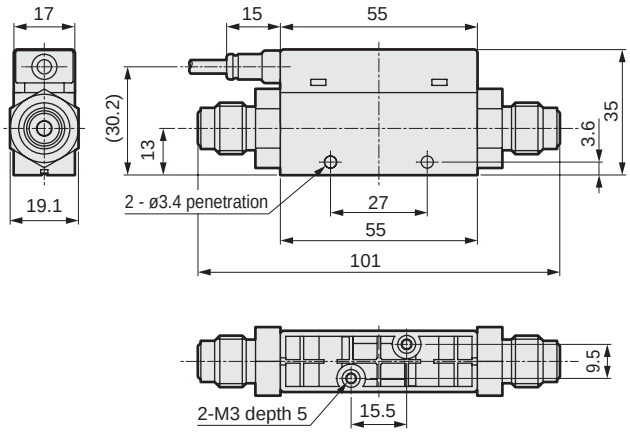

Port sizes: Straight Rc1/2, G1/2, NPT1/2

● FSM3−B$\boxed{B}\boxed{C}$2/CA1/CF1/CB1/CC1-P70/P80 (Full scale flow rates: 500,1000L/min)

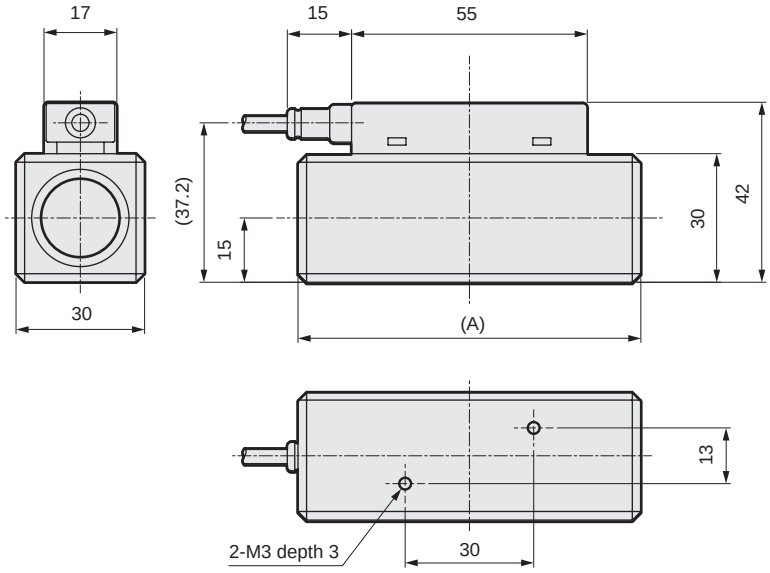

G thread shape (CB)

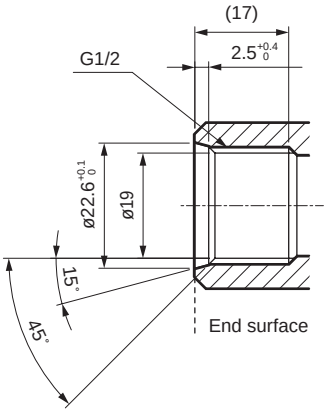

The 15° surface is the seal surface.
Please note that this is not an end face seal. Please also use upon confirming the thread insertion depth of the fitting.

Model No.	Port size	Dimension (A)
FSM3-B□□2CA1	Rc1/2	(80)
FSM3-B□□2CF1	G1/2	(80)
FSM3-B□□2CB1	G1/2	(95.4)
FSM3-B□□2CC1	NPT1/2	(80)

Compact flow rate sensor RAPIFLOW

FSM3 Series

IO-Link

● Stainless steel body (flow rate range: 500 mL/min to 1000 L/min)

IO-Link specifications

Item			FSM3-[A][B][C][D][E][F][G][H][I]-[ ]										
			[B]										
			005	010	020	050	100	200	500	101	201	501	102
Flow direction	[C]	U	Uni-direction										
		B	Bi-direction										
Measurement flow rate range (□/min) *1	[B]	U	15 to 500 mL	30 to 1000 mL	0.06 to 2.00 L	0.15 to 5.00 L	0.30 to 10.00 L	0.6 to 20.0 L	1.5 to 50.0 L	3.0 to 100.0 L	6 to 200 L	15 to 500 L	30 to 1000 L
		B	−500 to −15, 15 to 500 mL	−1000 to −30, 30 to 1000 mL	−2.00 to −0.06, 0.06 to 2.00 L	−5.00 to −0.15, 0.15 to 5.00 L	−10.00 to −0.30, 0.30 to 10.00 L	−20.0 to −0.6, 0.6 to 20.0 L	−50.0 to −1.5, 1.5 to 50.0 L	−100.0 to −3.0, 3.0 to 100.0 L	−200 to −6, 6 to 200 L	−500 to −15, 15 to 500 L	−1000 to −30, 30 to 1000 L
Display			LED display (power and status indicators)										
Working conditions	Applicable fluid *2		Clean air (JIS B 8392-1:2012 1.1.1 to 5.6.2), compressed air (JIS B 8392-1:2012 1.1.1 to 1.6.2), nitrogen gas										
			Argon, carbon dioxide, and gas mixture (argon + carbon dioxide)									–	
			Oxygen (When oxygen specifications are selected, the clean-room specifications of Ⓜ cannot be selected. Specifications automatically become oil-prohibited specifications.)									–	
	Temperature range		0 to 50°C (no condensation)										
	Pressure range		−0.09 to 1.00 MPa									−0.09 to 0.75 MPa	
	Proof pressure		1.5 MPa										
Operating ambient temperature/humidity			0 to 50°C, 90% RH or less										
Storage temperature			−10 to 60°C										
Accuracy *3	Accuracy *4		Within ±3% F.S. (Secondary side released to atmosphere) (The scope of warranty is in accordance with the "measurement flow rate range.")										
	Repeatability *5		Within ±1% F.S. (Secondary side released to atmosphere)										
	Temperature characteristics		Within ±0.2% F.S./°C (15 to 35°C, base temperature 25°C)										
	Pressure characteristics		Within ±5% F.S. (where secondary side is released to atmosphere)								Within ±5% F.S. (0 to 0.75 MPa, 0.35 MPa standard)		
Response time *6			50 msec or less										
Power supply voltage			18 to 30 VDC (ripple rate 1% or less)										
Current consumption *7			45 mA or less										
Lead wire *8			M12 both-end connector lead wire (3 m), AWG#23 or equivalent, 4-conductor										
Functions *9, *10			① Gas type selection, ② Flow rate integration, ③ Peak hold, etc.										
Degree of protection			IP40 or equivalent (IEC standard)										
Protection circuit *11			Power supply reverse connection protection										
Vibration resistance *12			10 to 150 Hz, 100 m/s^2, 2 hours each in X, Y, Z directions										
EMC Directive			EN55011, EN61000-6-2, EN61000-4-2/3/4/6/8										
Mounting	Mounting orientation *13		Unrestricted in vertical/horizontal direction										
	Straight piping section *14		Not required										

* Refer to page 1112 for communication specifications.

*1: The value converted to volumetric flow rate at standard condition (20°C 1 barometric pressure (101 kPa) 65%RH).
(20°C, 1 atmospheric pressure (101kPa), 0%RH with a gas other than air.)

*2: Use dry gas which does not contain corrosive elements such as chlorine, sulfur or acids, and which is clean and does not contain dust or oil mist. When using compressed air, use clean air that complies with JIS B 8392-1:2012 Class 1.1.1 to 1.6.2. Compressed air from the compressor contains drainage (water, oil oxides, foreign matter, etc.). To maintain the function of this product, install a filter, air dryer (min. pressure dew point 10˚C or less), and oil mist filter (max. oil content 0.1 mg/m^3) on the primary side (upstream side) of this product. (Refer to page 1118 for details on recommended circuit.)
The sensor for oxygen gas is a custom model. To prevent ignition accidents, do not allow oxygen to flow again when a fluid other than oxygen has flown even once.

*3: Compressed air is used for adjusting and inspecting this product. Accuracy for gas types other than air is a guideline.

*4: Accuracy is based on a CKD standard flow rate meter. It does not indicate absolute accuracy.
Repeatability, temperature characteristics, and pressure characteristics are not included for an accuracy of ±3% F.S.
Consider separately according to the working environment and working conditions.

*5: Repeatability calculated during a short time. Change over time is not included. (Refer to the product specifications for details.)

*6: The actual response time changes depending on the piping conditions.

*7: Current for when 24 VDC is connected, and no load is applied. The current consumption will vary depending on how the load is connected.

*8: The male end is straight, and the female end is angled. (Refer to page 1114.)
Tighten the M12 connector at a torque of 0.5 N·m or less.
Note, however, that using excessive force to tighten the connector can cause it to break.

*9: The gas type switching function enables switching to argon, carbon dioxide and a gas mixture of argon 80% + carbon dioxide 20%.
The measurement flow rate ranges after switching are as follows. (Note that the gas change function cannot be set with the 500 L/min, and 1000 L/min oxygen models.)

Gas type	Flow direction	Measurement flow rate range (□/min)							
		005	010	020	100	200	500	101	201
• Air • Nitrogen • Argon • Argon 80% + carbon dioxide 20%	Uni-direction	15 to 500 mL	30 to 1000 mL	0.06 to 2.00 L	0.30 to 10.00 L	0.6 to 20.0 L	1.5 to 50.0 L	3.0 to 100.0 L	6 to 200 L
	Bi-direction	−500 to −15 mL	−1000 to −30 mL	−2.00 to −0.06 L	−10.00 to −0.30 L	−20.0 to −0.6 L	−50.0 to −1.5 L	−100.0 to −3.0 L	−200 to −6 L
		15 to 500 mL	30 to 1000 mL	0.06 to 2.00 L	0.30 to 10.00 L	0.6 to 20.0 L	1.5 to 50.0 L	3.0 to 100.0 L	6 to 200 L
• Carbon dioxide	Uni-direction	15 to 250 mL	30 to 500 mL	0.06 to 1.00 L	0.30 to 5.00 L	0.6 to 10.0 L	1.5 to 25.0 L	3.0 to 50.0 L	6 to 100 L
	Bi-direction	−250 to −15 mL	−500 to −30 mL	−1.00 to −0.06 L	−5.00 to −0.30 L	−10.0 to −0.6 L	−25.0 to −1.5 L	−50.0 to −3.0 L	−100 to −6 L
		15 to 250 mL	30 to 500 mL	0.06 to 1.00 L	0.30 to 5.00 L	0.6 to 10.0 L	1.5 to 25.0 L	3.0 to 50.0 L	6 to 100 L

*10: The integrated flow is a calculated (reference) value. When using the integrated save function, take care to prevent the number of saves from exceeding the access count limit of the storage device (1 million times). (Changes to various settings also are counted in the access count.)

$$\text{Number of saves} = \frac{\text{Usage time}}{5\ \text{mins}} < 1\ \text{million times}$$

When the instantaneous flow rate is 1% or less, the flow rate is counted as integrated flow rate.

*11: This product's protection circuit is effective only for specific misconnections and load short-circuits. It does not provide protection for all misconnections.

*12: A communication error might occur depending on the vibration conditions. Install this product as far as possible in a place not subject to vibration.

*13: This product measures changes in heat distribution that are caused by flow.
When this product is mounted in a vertical orientation, convective flow may affect heat distribution or cause the zero point to deviate.

*14: Accuracy may be affected by the piping conditions. To perform measurement with greater accuracy, install a straight pipe with a piping I.D. ten times larger. With the 500 L/min and 1,000 L/min models, use piping with an internal diameter of 9 mm or more. If it is less than 9 mm, accuracy may be negatively affected.

*15: Refer to page 1106 for weight.

How to order

FSM3 - C 005 U 2 AA 1 L 1 N - G H R - P70

- FSM3: Model No.
- C: Ⓐ Display
- 005: Ⓑ Flow rate ranges (full scale)
- U: Ⓒ Flow direction
- 2: Ⓓ Body material / applicable fluid
- AA: Ⓔ Port size
- 1: Ⓕ Piping direction
- L: Ⓖ Output specifications
- 1: Ⓗ Unit specifications
- N: Ⓘ Valve option
- G: Ⓙ Lead wire
- H: Ⓚ Mounting (not assembled)
- R: Ⓛ Attached documents
- P70: Ⓜ Clean-room specifications

Code	Description
Ⓐ Display	
C	IO-Link

Ⓑ Flow rate ranges (full scale)

005	500 mL/min	**500**	50 L/min
010	1000 mL/min	**101**	100 L/min
020	2 L/min	**201**	200 L/min
050	5 L/min	**501**	500 L/min
100	10 L/min	**102**	1000 L/min
200	20 L/min		

Ⓒ Flow direction

U	Uni-direction
B	Bi-direction

Ⓓ Body material / applicable fluid

	Body material	Applicable fluid
2	SUS	Air (gas switchable)
3	SUS	Oxygen (oil-prohibited specifications) *2

Ⓔ Port size

AA	Rc1/8	
BA	Rc1/4	
CA	Rc1/2	
AF	G1/8	*3
BF	G1/4	*3
CF	G1/2	*3
AB	G1/8	*4
BB	G1/4	*4
CB	G1/2	*4
AC	NPT1/8	
BC	NPT1/4	
CC	NPT1/2	
AD	1/4" double barbed fitting (50 L/min or less)	
BD	1/4" double barbed fitting (50 to 200 L/min)	
AE	1/4" JXR male fitting (50 L/min or less)	
BE	1/4" JXR male fitting (50 to 200 L/min)	

Ⓕ Piping direction

1	Straight

Ⓖ Output specifications

L	IO-Link communication

Ⓗ Unit specifications

1	SI units only

Ⓘ Valve option

N	None

Ⓙ Lead wire

Blank	None
G	M12 both-end lead wire with connector (3 m)

Ⓚ Mounting (not assembled) *5

Blank	None
H	Bracket 1 (for models 200 L or less)
J	Bracket 2 (for 500 or 1000 L models)
M	DIN rail mounting (for models 200 L or less)

Ⓛ Attached documents

Blank	None
R	Company certification
S	Company certification + Traceability certification

Ⓜ Clean-room specifications *8

P70	Anti-dust generation	*6
P80	Oil free	*7

[Example of model No.]

FSM3-C005U2AA1L1N-GHR-P70

Model: RAPIFLOW FSM3 Series

Ⓐ Display	C	: IO-Link
Ⓑ Flow rate	005	: 500 mL/min
Ⓒ Flow direction	U	: Uni-direction
Ⓓ Body material / applicable fluid	2	: SUS/air
Ⓔ Port size	AA	: Rc1/8
Ⓕ Piping direction	1	: Straight
Ⓖ Output specifications	L	: IO-Link
Ⓗ Unit specifications	1	: SI units only
Ⓘ Valve option	N	: None
Ⓙ Lead wire	G	: M12 both-end lead wire with connector (3 m)
Ⓚ Mounting attachment	H	: Bracket
Ⓛ Attached documents	R	: Company certification
Ⓜ Clean-room specifications	P70	: Anti-dust generation

Precautions for model No. selection

*1: Refer to the correspondence table on the following page when selecting the model.
*2: "3: Oxygen" cannot be selected with 500 L/min and 1000 L/min models.
*3: The G thread connection shape is compliant with ISO16030 standards.
*4: Please refer to the external dimension diagram (Page 1090) for the G thread connection shape when making a selection. (The G thread connection shape is compliant with JIS B 2351-1, O types.)
*5: Optional parts are provided with the product. They are not assembled with the product.
*6: The product surface is degreased and cleaned before packaging, and heat-sealed into an antistatic bag on a clean bench (Class 1000 or more).
*7: In addition to P70 specifications, wetted section materials are degreased and cleaned.
*8: This cannot be selected on an oxygen type (blank only).

Flow rate ranges and port sizes

Ⓑ Flow rate codes	Ⓔ Port sizes															
	AA	BA	CA	AF	BF	CF	AB	BB	CB	AC	BC	CC	AD	BD	AE	BE
	Rc1/8	Rc1/4	Rc1/2	G1/8	G1/4	G1/2	G1/8	G1/4	G1/2	NPT1/8	NPT1/4	NPT1/2	1/4" Double barbed fitting		1/4" JXR Male fitting	
005	●			●			●			●			●		●	
010	●			●			●			●			●		●	
020	●			●			●			●			●		●	
050	●			●			●			●			●		●	
100	●			●			●			●			●		●	
200	●			●			●			●			●		●	
500	●	●		●	●		●	●		●	●		●	●	●	●
101		●			●			●			●			●		●
201		●			●			●			●			●		●
501			●			●			●			●				
102			●			●			●			●				

SCPD3
SCM
SSD2
MDC2
SMG
LCM
LCR
LCG
LCX
STM
STG
STR2
MRL2
GRC
Cylinder switch
MN3E MN4E
4GA/B
M4GA/B
MN4GA/B
F.R (module unit)
Clean F.R
Precision R
Press gauge Diff. press gauge
Electro-pneumatic R
Speed controller
Auxiliary valve
Fitting/ tube
Clean air unit
Pressure sensor
Flow rate sensor
Valve for air blow
Ending

Dimensions (IO-Link) (flow rate range: 500 mL/min to 50 L/min)

Port sizes: Straight Rc1/8, G1/8, NPT1/8

● FSM3−C$\boxed{B}\boxed{C}^{2}_{3}$/AA1/AB1/AC1-P70/P80 (Full scale flow rates: 500 mL/min, 1, 2, 5, 10, 20, 50 L/min)

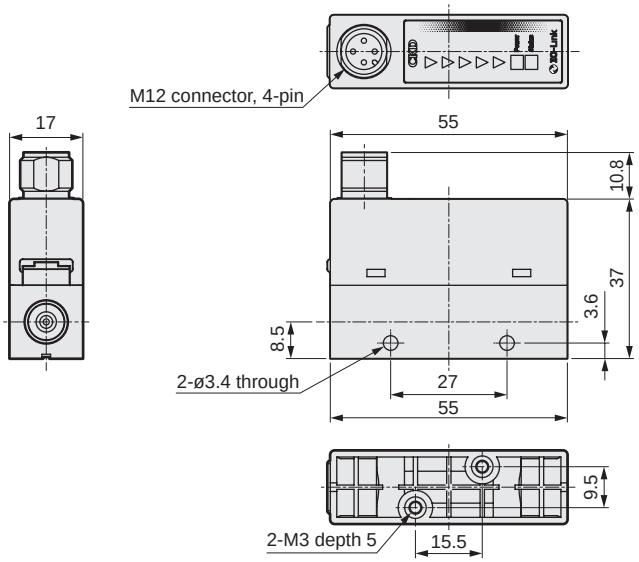

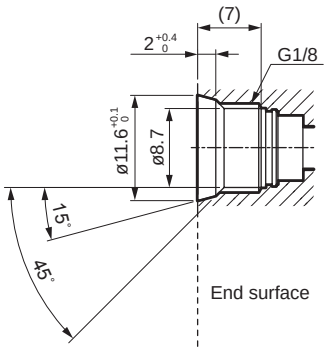

The 15° surface is the seal surface.
Please note that this is not an end face seal. Please also use upon confirming the thread insertion depth of the fitting.

Port size: Straight G1/8

● FSM3−B$\boxed{B}\boxed{C}^{2}_{3}$/AF1-P70/P80 (Full scale flow rates: 500 mL/min, 1, 2, 5, 10, 20, 50 L/min)

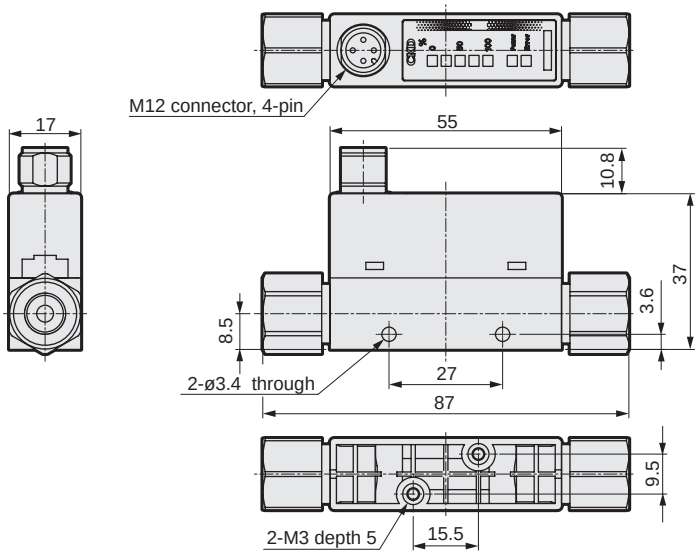

Port size: Straight 1/4" double barbed fitting

● FSM3−C$\boxed{B}\boxed{C}^{2}_{3}$/AD1-P70/P80
(Full scale flow rates: 500 mL/min, 1, 2, 5, 10, 20, 50 L/min)

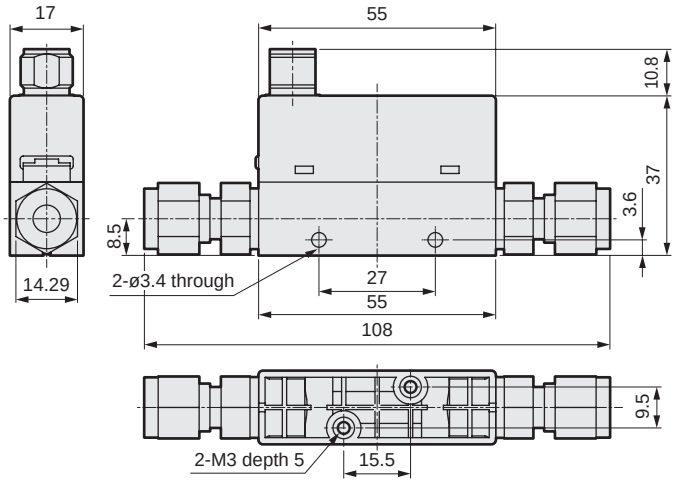

Port size: Straight 1/4" JXR male fitting

● FSM3−C$\boxed{B}\boxed{C}^{2}_{3}$/AE1-P70/P80
(Full scale flow rates: 500 mL/min, 1, 2, 5, 10, 20, 50 L/min)

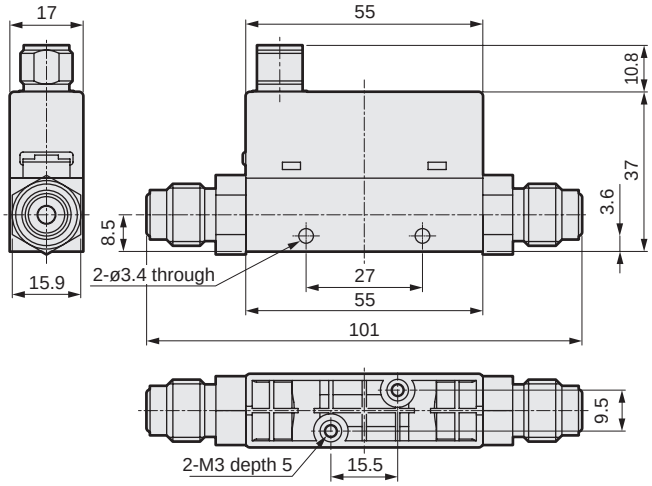

Dimensions (IO-Link) (flow rate range: 50 L/min to 1000 L/min)

Port sizes: Straight Rc1/4, G1/4, NPT1/4

● FSM3−C[B][C]$^{2}_{3}$/BA1/BB1/BC1-P70/P80 (Full scale flow rates: 50, 100, 200 L/min)

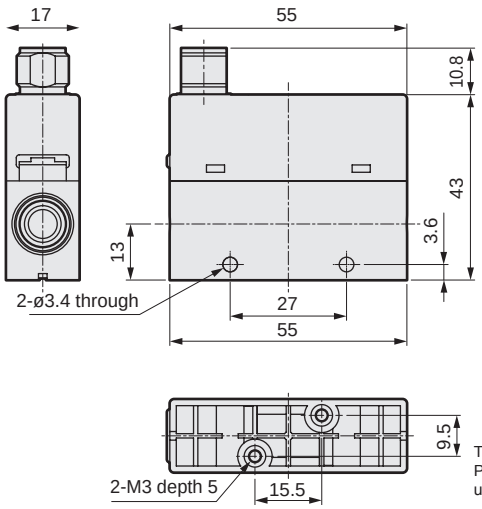

G thread shape (BB)

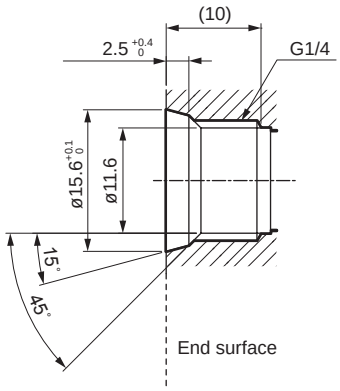

The 15° surface is the seal surface.
Please note that this is not an end face seal. Please also use upon confirming the thread insertion depth of the fitting.

Port sizes: Straight G1/4

● FSM3−C[B][C]$^{2}_{3}$/BF1-P70/P80
(Full scale flow rates: 50, 100, 200 L/min)

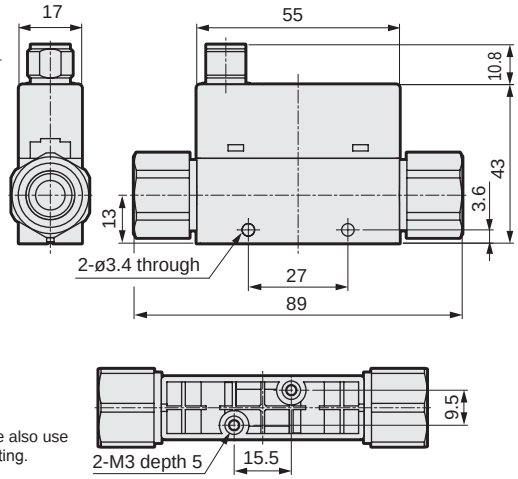

Port sizes: Straight 1/4" double barbed fitting

● FSM3−C[B][C]$^{2}_{3}$/BD1-P70/P80 (Full scale flow rates: 50, 100, 200 L/min)

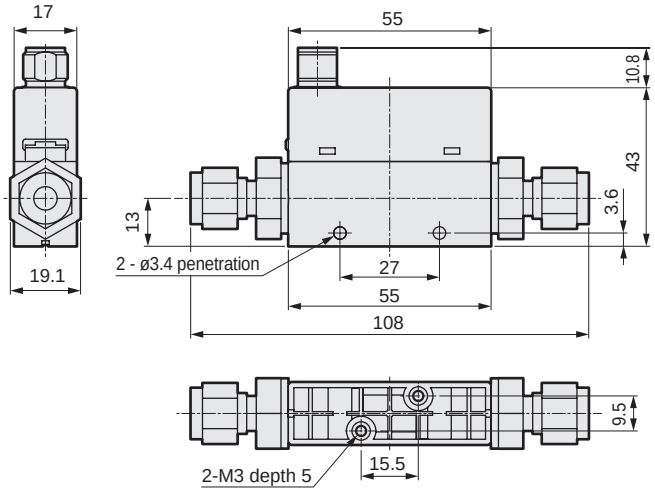

Port size: Straight 1/4" JXR male fitting

● FSM3−C[B][C]$^{2}_{3}$/BE1-P70/P80 (Full scale flow rates: 50, 100, 200 L/min)

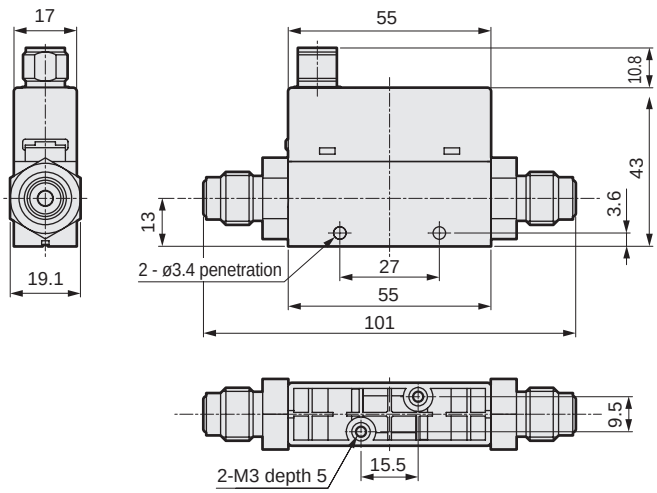

Port sizes: Straight Rc1/2, G1/2, NPT1/2

● FSM3−C[B][C]2/CA1/CF1/CB1/CC1-P70/P80 (Full scale flow rates: 500,1000L/min)

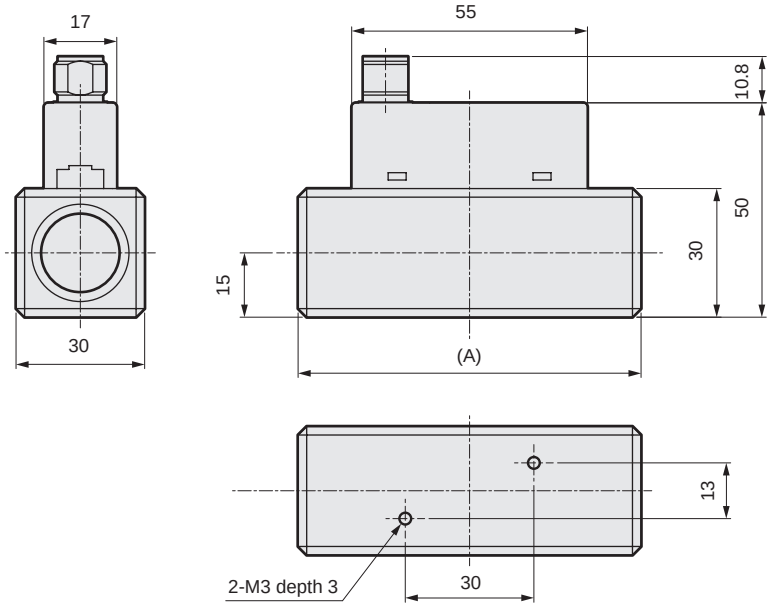

G thread shape (CB)

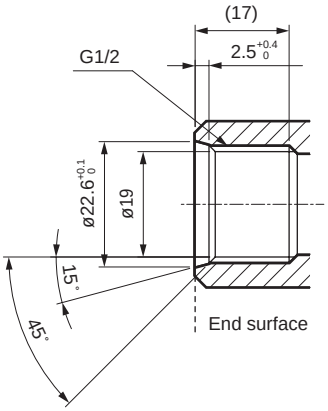

The 15° surface is the seal surface.
Please note that this is not an end face seal. Please also use upon confirming the thread insertion depth of the fitting.

Model No.	Port size	Dimension (A)
FSM3-C□□2CA1	Rc1/2	(80)
FSM3-C□□2CF1	G1/2	(80)
FSM3-C□□2CB1	G1/2	(95.4)
FSM3-C□□2CC1	NPT1/2	(80)

Compact flow rate sensor RAPIFLOW

FSM2 Series

Separated display

RoHS

Separated display specifications

Item				Separated display FSM2−D−[*1][*2]−□−[*3]
Settable flow rate range *1			mL	5, 10, 50, 100, 500, 1000
			L	2, 4, 5, 10, 12, 20, 25, 32, 50, 100, 200, 500, 1000
			m^3	1.5
Operating ambient temperature/humidity				0 to 50°C
Display				4 digit + 4 digit 2 color LCD
Input voltage				1 to 5 V
Output	Switch output	*1	N	Output 2 points (NPN open collector output, 50 mA or less, voltage drop 2.4 V or less)
			P	Output 2 points (PNP open collector output, 50 mA or less, voltage drop 2.4 V or less)
	Analog output	*2	V	1 to 5 V voltage output 1 point (connecting load impedance 50 kΩ or more) *6
			A	4 to 20 mA current output 1 point (connecting load impedance 0 to 300 Ω)
Power supply voltage		*2	V	12 to 24 VDC (10.8 to 26.4 V)
			A	24 VDC (21.6 to 26.4 V)
Current consumption *2				40 mA or less (when 24 VDC is connected, and no load is connected)
Lead wire				ø3.7, AWG26 or equivalent × 5-conductor (connector), insulator O.D. ø1.0
Functions				Flow rate display, flow rate display peak hold, switch output, analog output
Degree of protection				IEC standards IP40 or equivalent
Protection circuit *3				Power supply reverse connection protection
EMC Directive				EN55011, EN61000-6-2, EN61000-4-2/3/4/6/8
Accessory				1 sensor connection connector (e-con), conforming cable AWG24 to 26, insulator O.D. ø1.0 to 1.2
Weight (main body only)				Approx. 40 g
Clean-room specifications *4	*3		P70	Anti-dust generation

*1: The flow rate range, flow direction, and gas type are automatically recognized only when the FSM3 bar display type and FSM2 separated display type are connected. (Default state)
The FSM-H Series, FSM-V Series and WFK3000 Series flow rate ranges are supported in addition, but automatic recognition is not. Always set the product's flow rate range, flow direction and gas type before use.
The connectable flow rate ranges are shown in "Display for each flow rate range" below.
The "Gas Type Setting" function of this product is not a "Gas Type Switching" function that switches the sensor characteristics to match the gas type. If a "Gas Type Switching" function is required, use the LCD display type.
When the sensor section is changed, the previous flow rate range settings, etc., will still be recorded. Always reset the settings before using.
*2: Current for when 24 VDC is connected, and no load is connected. The current consumption varies depending on how the load is connected.
*3: This product's protection circuit is effective only for specific mis-connections and a load short-circuit. It does not provide protection against various mis-connections.
*4: [P70] Anti-dust generation (product surface is degreased and cleaned before packing. Heat sealed into antistatic bag in clean bench (Class 1000 or higher).)
*5: When connecting to the FSM-V Series or WFK3000 Series, the lead wire size is different so a separate compatible sensor connection connector (e-con) will be required. Contact your nearest CKD sales office or dealer.
The attached sensor connection connector (e-con) can be used with the FSM2 Series, FSM3 Series and FSM-H Series.
*6: The output impedance of the analog output section is approx. 1 kΩ. If the impedance of the connecting load is small, output and error increase. Check error with the impedance of the connecting load before using.
*7: The gas type display shows “Ai” (air, N2) when a connection is made with FSM3 bar display type oxygen specifications, but it can still be used without any problems.

Display for each flow rate range

Flow rate display	Display range	One way	0 to 500 mL/min	0 to 1000 mL/min	0 to 2.00 L/min	0 to 4.00 L/min	0 to 5.00 L/min	0 to 10.00 L/min	0 to 12.0 L/min	0 to 20.0 L/min	0 to 25.0 L/min	0 to 32.0 L/min	0 to 50.0 L/min	0 to 100.0 L/min	0 to 200 L/min	0 to 500 L/min	0 to 1000 L/min	0 to 1.50 m^3/min	0 to 5.00 mL/min	0 to 10.00 mL/min	0 to 50.0 mL/min	0 to 100.0 mL/min
		Bi-direction	−500 to 500 mL/min	−1000 to 1000 mL/min	−2.00 to 2.00 L/min	-	−5.00 to 5.00 L/min	−10.00 to 10.00 L/min	-	−20.0 to 20.0 L/min	-	-	−50.0 to 50.0 L/min	−100.0 to 100.0 L/min	−200 to 200 L/min	−500 to 500 L/min	−1000 to 1000 L/min	−1.50 to 1.50 m^3/min	−5.00 to 5.00 mL/min	−10.00 to 10.00 mL/min	−50.0 to 50.0 mL/min	−100.0 to 100.0 mL/min
	Display resolution		1 mL/min		0.01 L/min				0.1 L/min						1 L/min			0.01 m^3/min	0.01 mL/min		0.1 mL/min	
Integrating functions*2	Display range		9999999 mL		99999.99 L				999999.9 L						9999999 L			99999.99 m^3	99999.99 mL		999999.9 mL	
	Display resolution		1 mL		0.01 L				0.1 L						1 L			0.01 m^3	0.01 mL		0.1 mL	
	Integrated pulse output rate		5 mL	10 mL	0.02 L	0.04 L	0.05 L	0.1 L	0.12 L	0.2 L	0.25 L	0.32 L	0.5 L	1 L	2 L	5 L	10 L	15 L	0.05 mL	0.1 mL	0.5 mL	1 mL

* The corresponding sensor is the voltage (1 to 5 V) type. If the current output or other voltage output is connected, it will not operate properly.

*1: The flow rate display is rounded off at approximately ±1% or less (forced zero).
*2: The accumulated flow is a calculated (reference) value. It is reset when the power is turned OFF.

How to order

FSM2 - D - N V - 3 P - P70

Ⓐ Output
Ⓑ Analog output
Ⓒ Lead wire
Ⓓ Bracket
Ⓔ Clean-room specifications

Code	Description
Ⓐ Output	
N	Switch output (NPN) 2 points, analog output 1 point
P	Switch output (PNP) 2 points, analog output 1 point
Ⓑ Analog output	
V	Voltage output (1-5 V)
A	Current output (4 to 20 mA)
Ⓒ Lead wire	
Blank	None
1	1 m
3	3 m
Ⓓ Bracket	
Blank	None
P	Panel mounting kit
Ⓔ Clean-room specifications	
P70	Anti-dust generation

CAUTION

The corresponding sensor is the voltage (1 to 5 V). If the current output type or other voltage output type is connected, it doesn't operate properly. When using the FSM3, use the bar display type voltage output type.

Dimensions

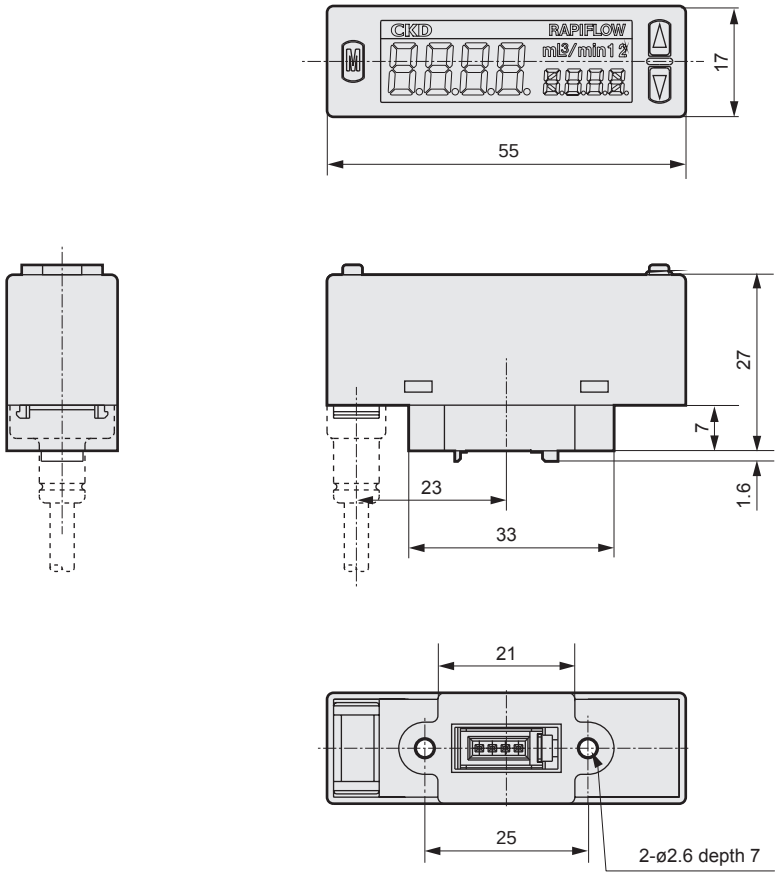

SCPD3
SCM
SSD2
MDC2
SMG
LCM
LCR
LCG
LCX
STM
STG
STR2
MRL2
GRC
Cylinder switch
MN3E MN4E
4GA/B
M4GA/B
MN4GA/B
F.R (module unit)
Clean F.R
Precision R
Press gauge Diff. press gauge
Electro-pneumatic R
Speed controller
Auxiliary valve
Fitting/ tube
Clean air unit
Pressure sensor
Flow rate sensor
Valve for air blow
Ending

Example of internal circuit and load connection

●FSM3-L□□□□□B/F/□□ (LCD display NPN output)

[CH2 is used as SW output]

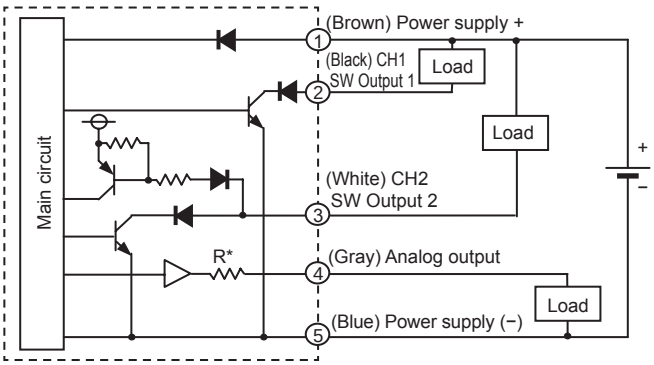

[CH2 is used as external input]

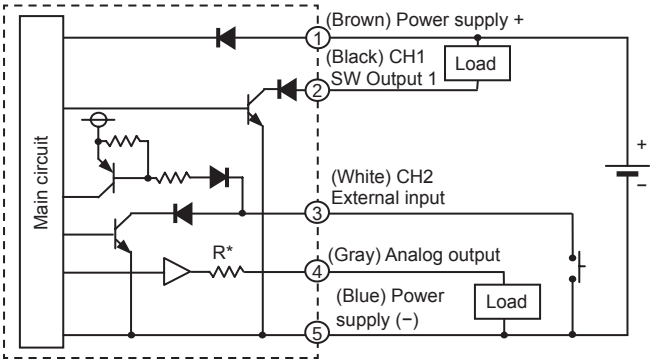

* Analog output voltage output R: approx. 1 kΩ
Current output R: approx. 100 Ω

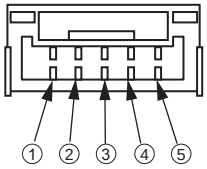

(FSM3 side)

Terminal No.	Option lead wire color	Name
①	Brown	Power supply (+) (voltage output: 12 to 24 V, current output: 24 V)
②	Black	CH1 (switch output 1: max. 50 mA)
③	White	CH2 (switch output 2: max. 50 mA, or external input)
④	Gray	Analog output Voltage output: 1 to 5 V load impedance 50 kΩ or more Current output: 4 to 20 mA load impedance 300 Ω or less
⑤	Blue	Power supply − (GND)

●FSM3-L□□□□□D/H/□□ (LCD display PNP output)

[CH2 is used as SW output]

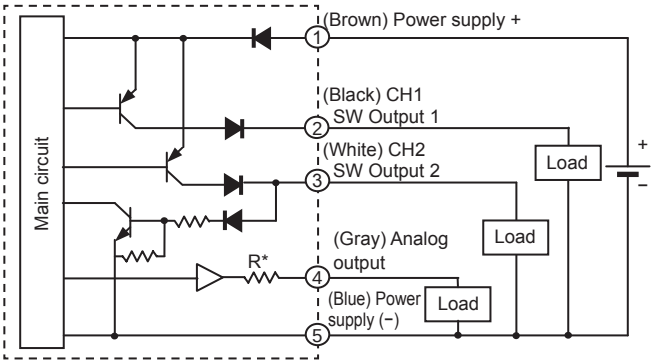

[CH2 is used as external input]

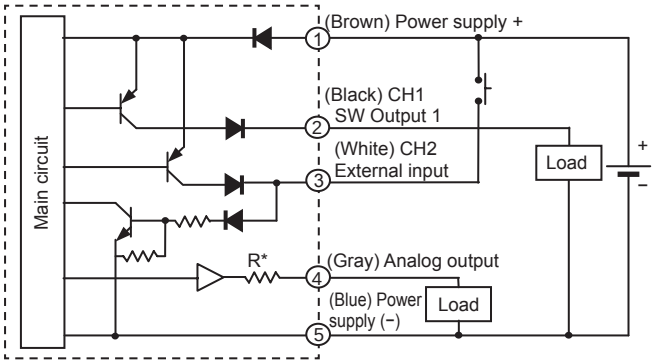

* Analog output voltage output R: approx. 1 kΩ
Current output R: approx. 100 Ω

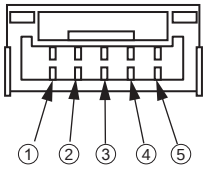

(FSM3 side)

Terminal No.	Option lead wire color	Name
①	Brown	Power supply (+) (voltage output: 12 to 24 V, current output: 24 V)
②	Black	CH1 (switch output 1: max. 50 mA)
③	White	CH2 (switch output 2: max. 50 mA, or external input)
④	Gray	Analog output Voltage output: 1 to 5 V load impedance 50 kΩ or more Current output: 4 to 20 mA load impedance 300 Ω or less
⑤	Blue	Power supply − (GND)

Example of internal circuit and load connection

●FSM3-L□□□□□A/E/□□
(LCD display, NPN output, with setting copy function)

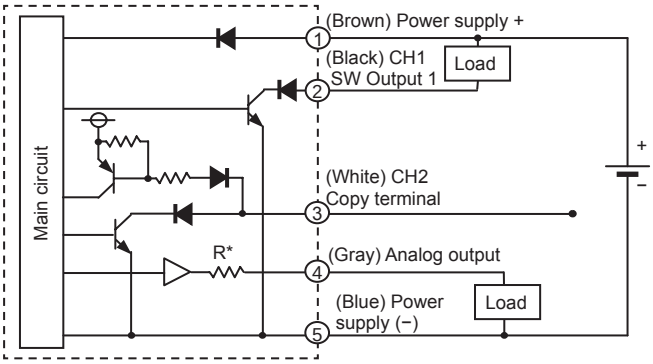

* Analog output voltage output R: approx. 1 kΩ
Current output R: approx. 100 Ω

●FSM3-L□□□□□C/G/□□
(LCD display, PNP output, with setting copy function)

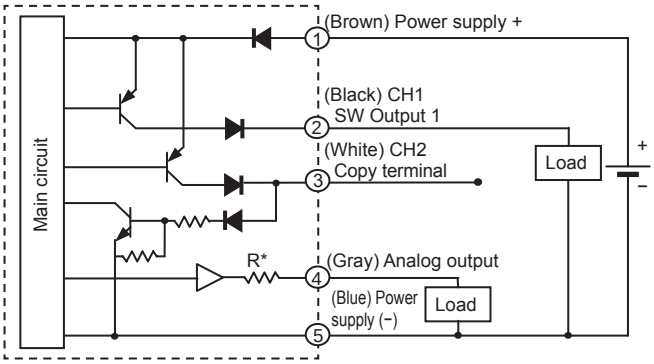

* Analog output voltage output R: approx. 1 kΩ
Current output R: approx. 100 Ω

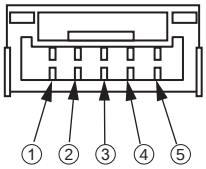

(FSM3 side)

Terminal No.	Option lead wire color	Name
①	Brown	Power supply (+) (voltage output: 12 to 24 V, current output: 24 V)
②	Black	CH1 (switch output 1: max. 50 mA)
③	White	CH2 (copy terminal)
④	Gray	Analog output Voltage output: 1 to 5 V load impedance 50 kΩ or more Current output: 4 to 20 mA load impedance 300 Ω or less
⑤	Blue	Power supply − (GND)

●FSM3-L□□□□□A/C/E/G/□□ (LCD display, with setting copy function)

[When using setting copy function]

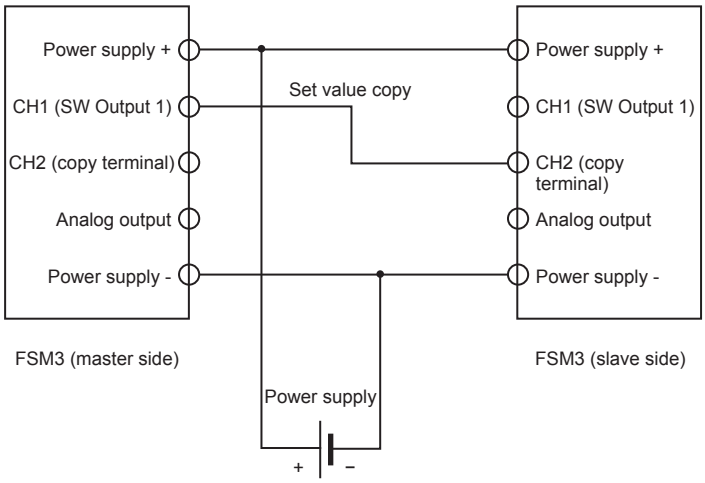

Connect CH1 (SW output 1) on the master side to CH2 (copy terminal) on the slave side and power ON the sensor to use the setting copy function (F93).
Please be sure to make this connection only when using the setting copy function.
If copying is done while load is connected with the CH1, or switching is done while connected with the CH1 and CH2 as described in the load connection example above, there may be unexpected behavior on the equipment side or malfunctioning with the equipment and FSM3.
Please be sure to never use it when it is connected to a copy terminal.

SCPD3
SCM
SSD2
MDC2
SMG
LCM
LCR
LCG
LCX
STM
STG
STR2
MRL2
GRC
Cylinder switch
MN3E MN4E
4GA/B
M4GA/B
MN4GA/B
F.R (module unit)
Clean F.R
Precision R
Press gauge Diff. press gauge
Electro-pneumatic R
Speed controller
Auxiliary valve
Fitting/ tube
Clean air unit
Pressure sensor
Flow rate sensor
Valve for air blow
Ending

Example of internal circuit and load connection

●FSM3-B□□□□□J/K/□□ (bar display)

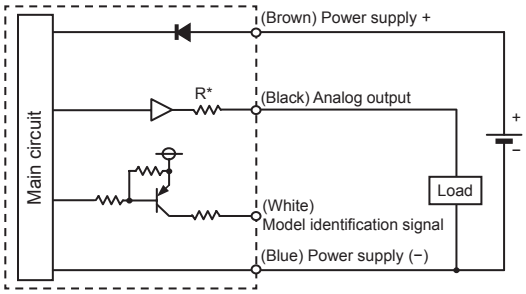

*Analog output voltage output R: approx. 1 kΩ
Analog output current output R: approx. 100 kΩ

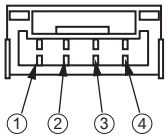

(FSM3 side)

Terminal No.	Option lead wire color	Name
①	Brown	Power supply (+) (voltage output: 12 to 24 V, current output: 24 V)
②	Black	Analog output Voltage output: 1-5 V Load impedance 50 kΩ and over Current output: 4 to 20 mA Load impedance 300 Ω or less
③	White	Model identification signal It will not connect during use with a single unit.
④	Blue	Power supply − (GND)

●FSM3-C□□□□□L□□ (IO-Link)

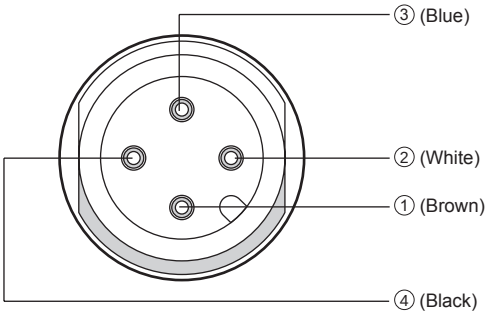

Terminal No.	Lead wire color	Name
①	Brown	Power supply + (18 to 30 V)
②	White	N.C.
③	Blue	Power supply − (GND)
④	Black	C/Q (IO-Link)

●Connecting the separated display and FSM3 bar display

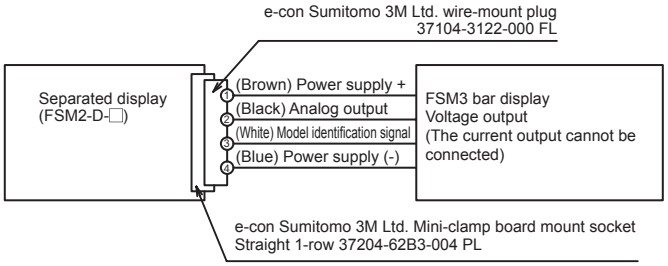

Analog output characteristics

Flow direction	Voltage output	Current output
[Uni-directional] 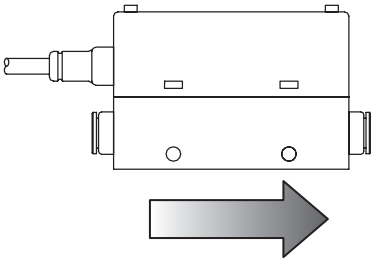	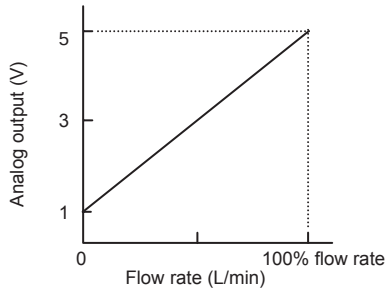	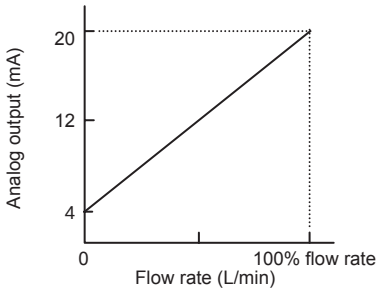
[Bi-directional] 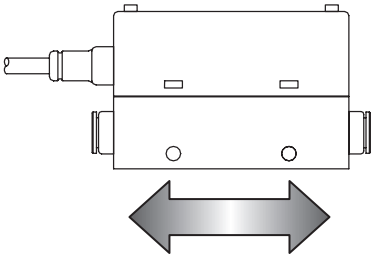	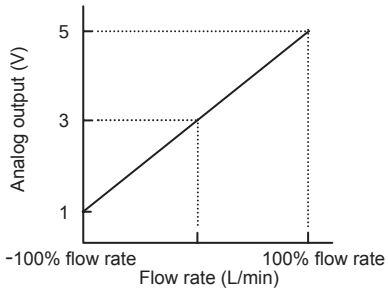	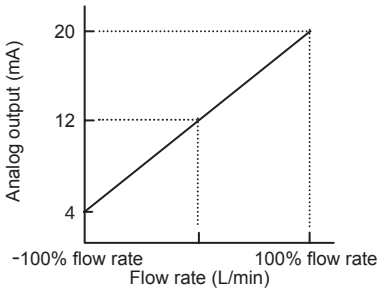

*1: The full scale of the uni-directional type is 0 to 100%, and full scale of the bi-directional type is −100% to 100%.
With the display integrated bi-directional type, output can be switched to uni-directional with the button settings. The value after switching is a reference value. Refer to page 1087 for details.
*2: Refer to page 1053 for details of analog output when carbon dioxide is switched to.
*3: Outputs are made even outside the measurement flow range with analog outputs. Although accuracy is not guaranteed, outputs can be made with a voltage type with a minimum of about 0.6 V and a maximum of about 5.4 V, and with a current type with a minimum of about 2.4 mA and a maximum of about 21.6 mA.

Pressure loss characteristics (resin body, air)

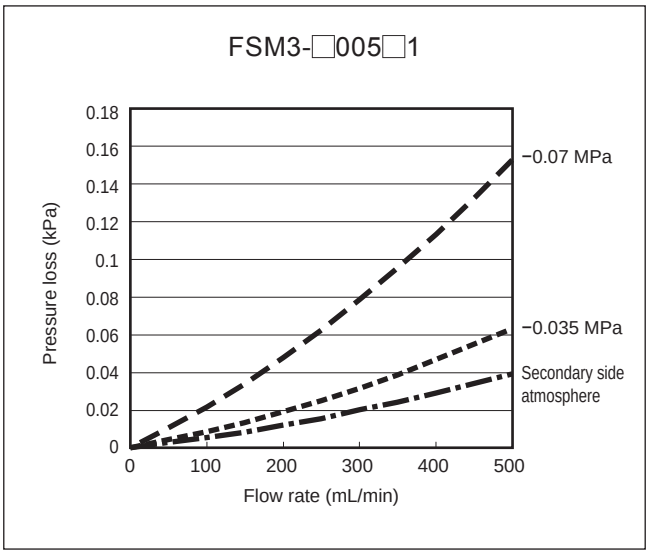

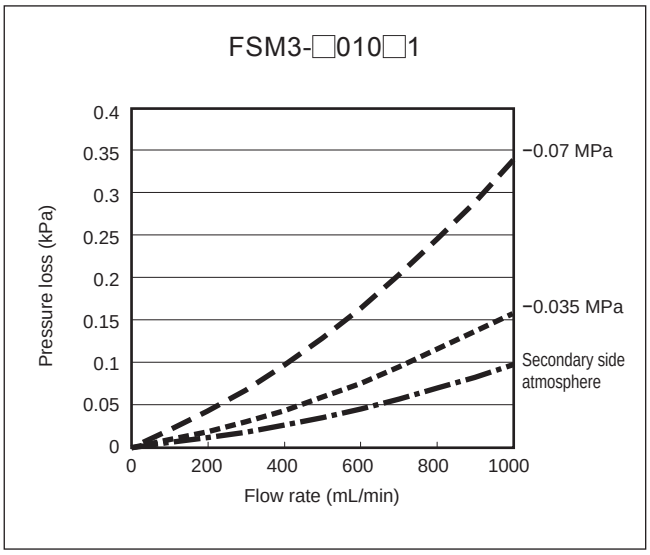

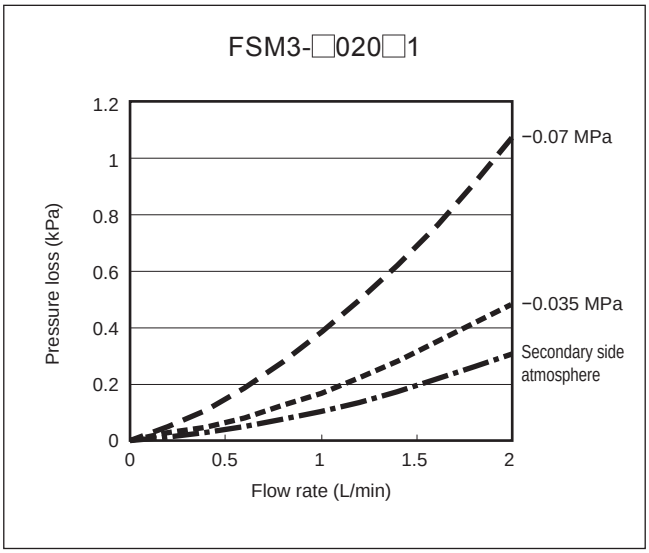

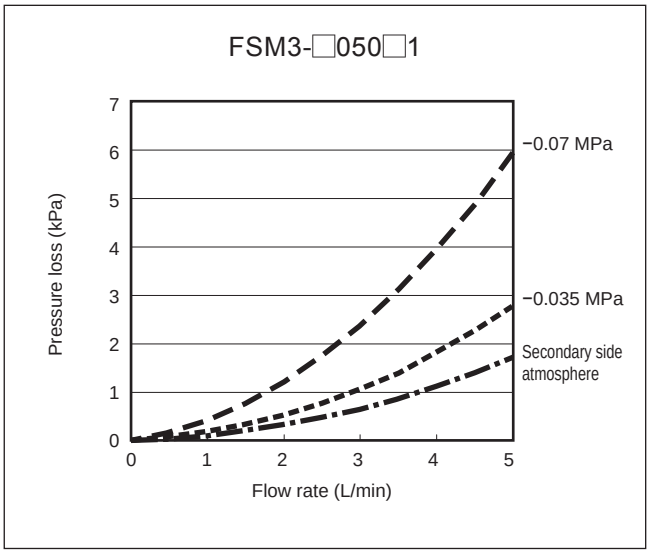

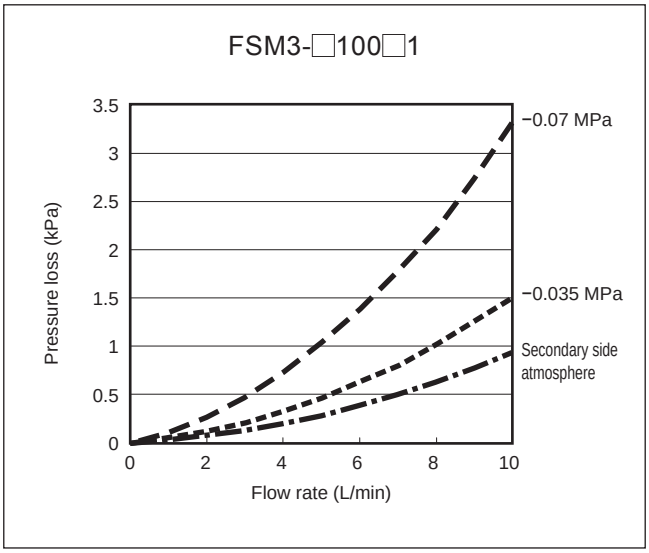

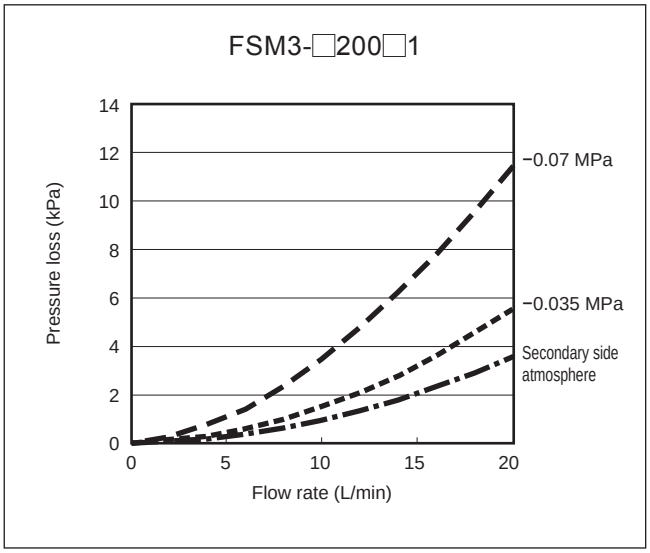

Pressure loss characteristics (resin body, air)

FSM3-□500□1 (small body)

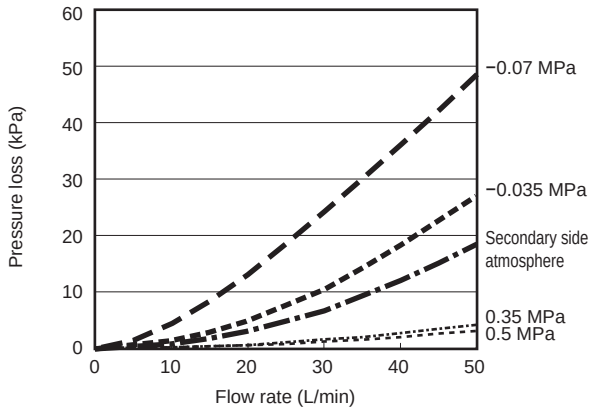

FSM3-□500□1 (medium body)

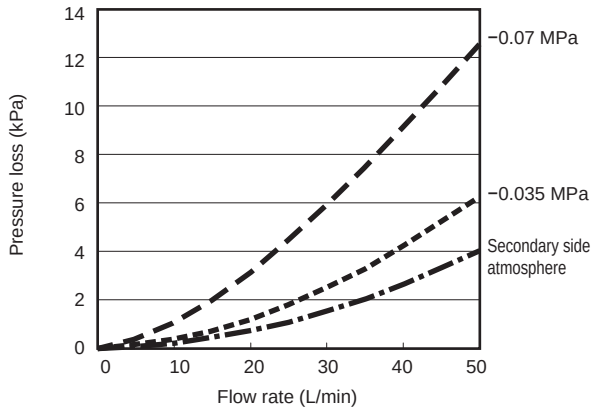

FSM3-□101□1

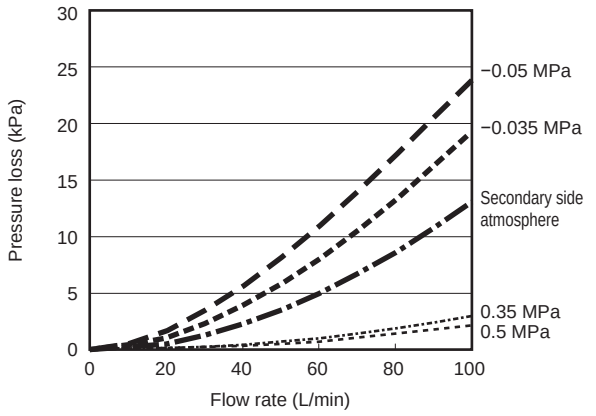

FSM3-□201□1

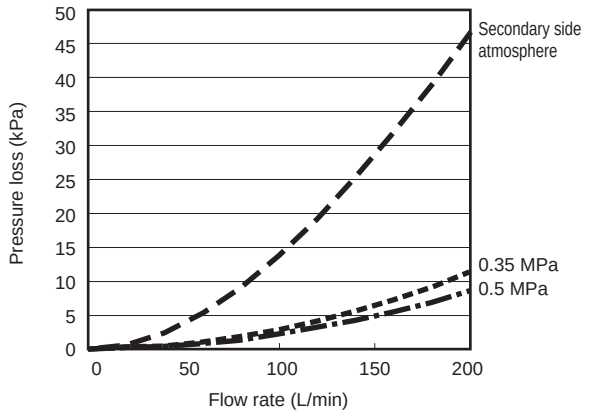

FSM3-□501□1

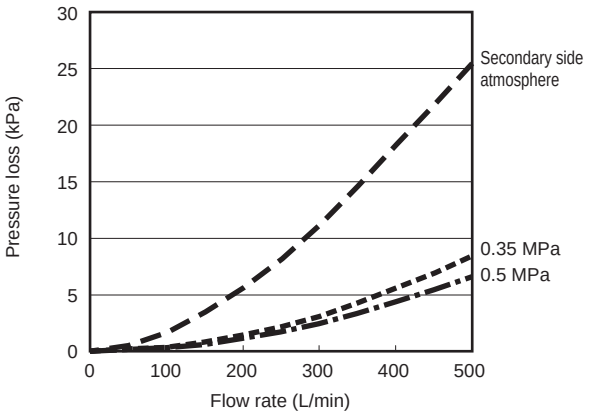

FSM3-□102□1

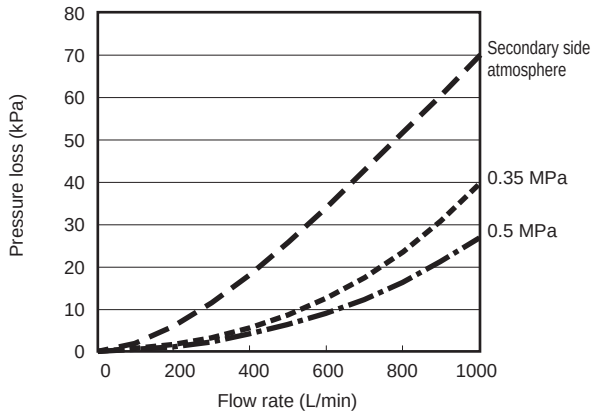

Pressure loss characteristics (stainless steel body, air)

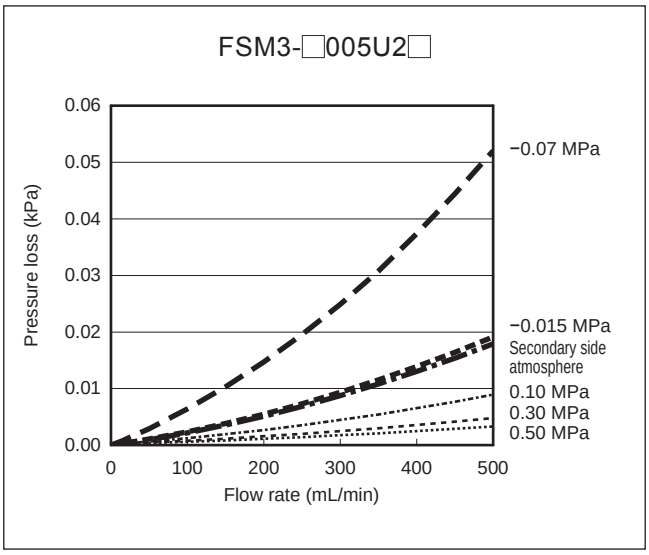

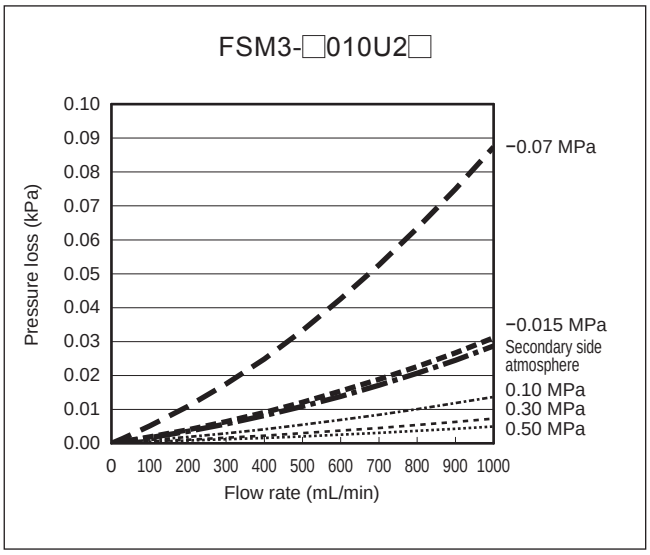

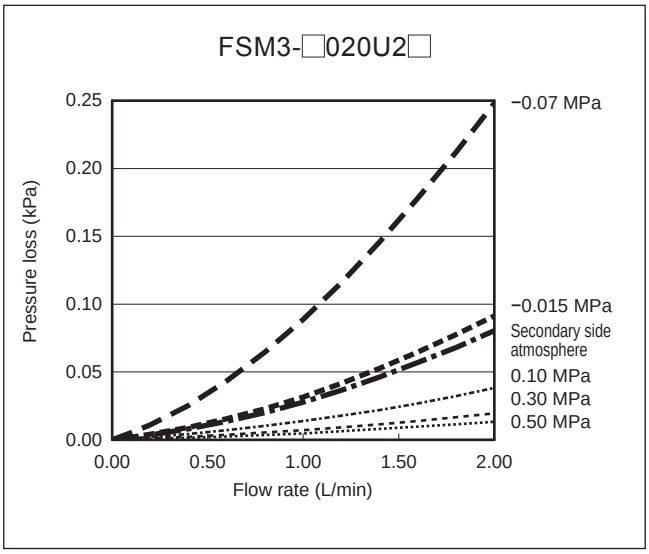

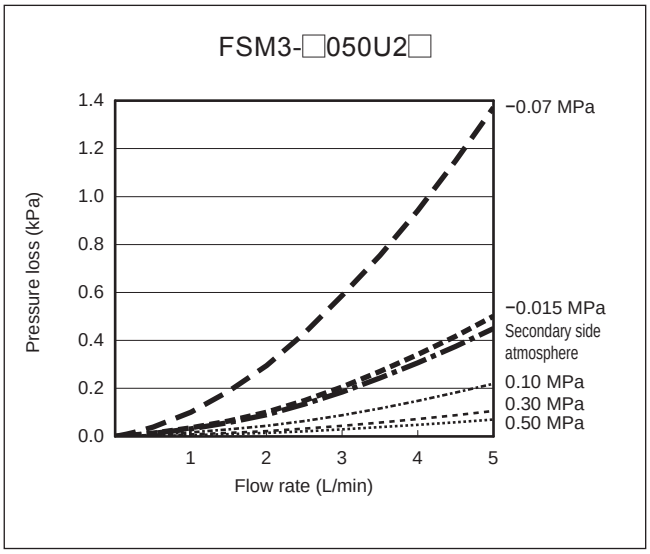

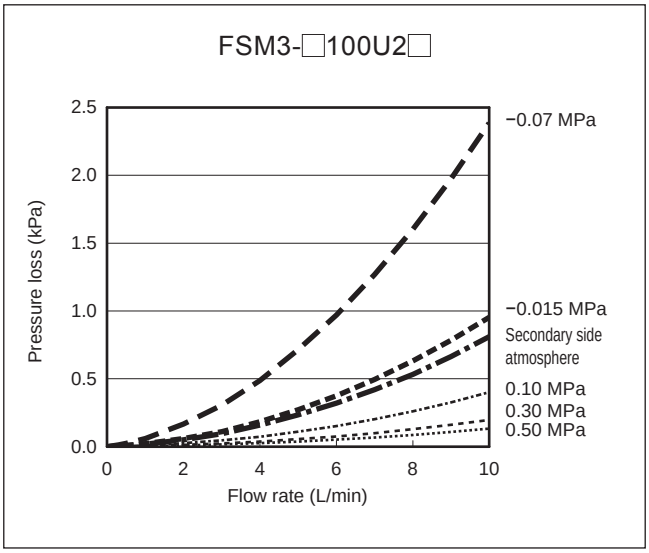

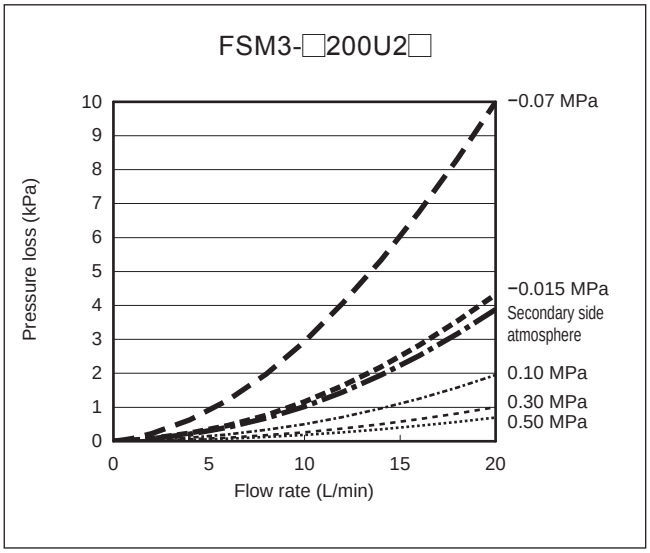

SCPD3
SCM
SSD2
MDC2
SMG
LCM
LCR
LCG
LCX
STM
STG
STR2
MRL2
GRC
Cylinder switch
MN3E MN4E
4GA/B
M4GA/B
MN4GA/B
F.R (module unit)
Clean F.R
Precision R
Press gauge Diff. press gauge
Electro-pneumatic R
Speed controller
Auxiliary valve
Fitting/ tube
Clean air unit
Pressure sensor
Flow rate sensor
Valve for air blow
Ending

Pressure loss characteristics (stainless steel body, air)

FSM3-□500U2□ (small body)

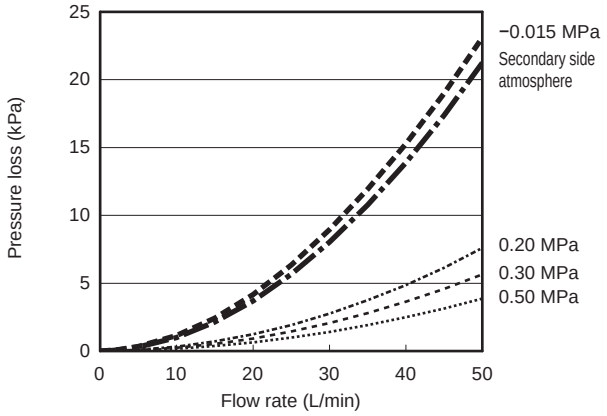

FSM3-□500U2□ (medium body)

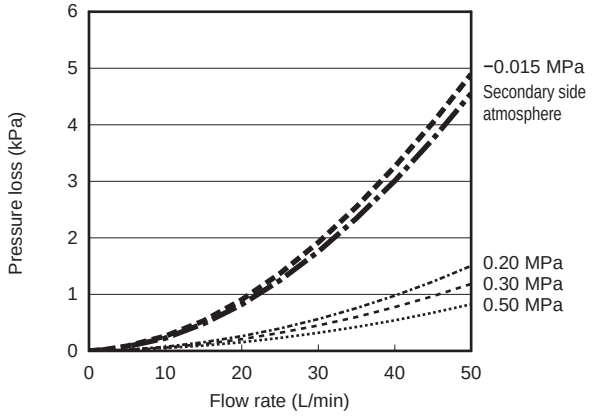

FSM3-□101U2□

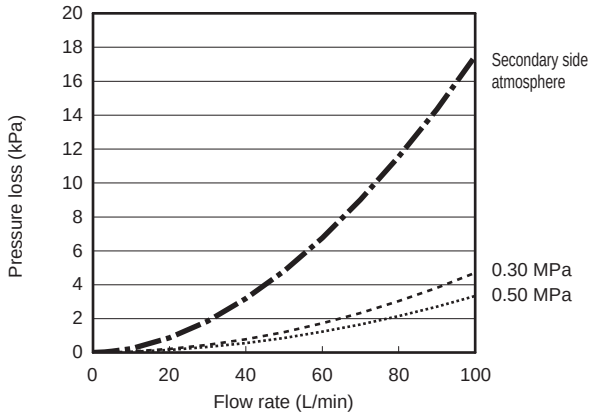

FSM3-□201U2□

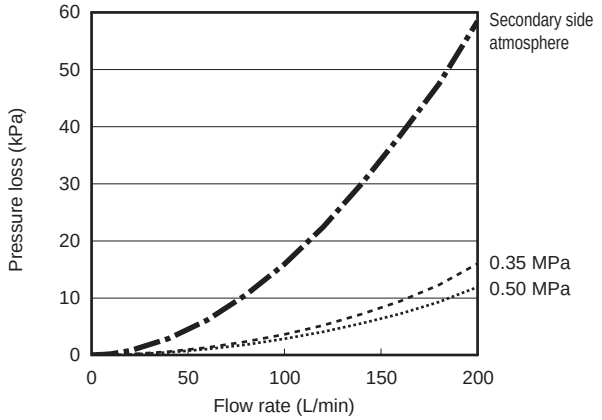

FSM3-□501U2□

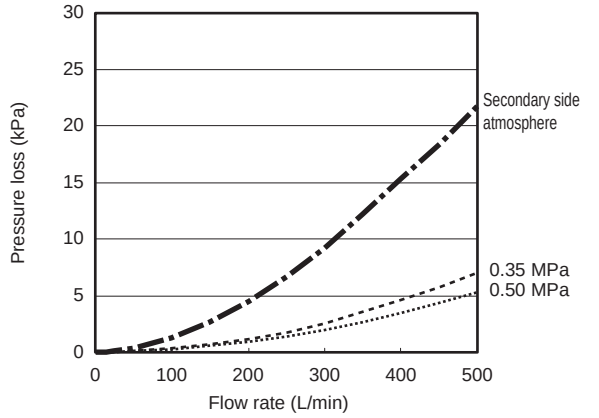

FSM3-□102U2□

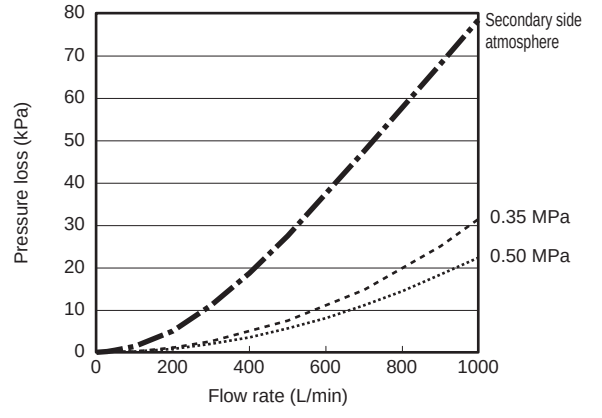

Pressure loss characteristics

The graph shows the data obtained in air.
With gases other than air, as a guideline multiply specific gravity as follows.

Gas	Specific gravity
Argon	1.38
Carbon dioxide	1.53
Argon 80% Carbon dioxide 20%	1.41

Needle valve flow characteristics (resin body) (for air, nitrogen gas)

● FSM3-L005/010/020

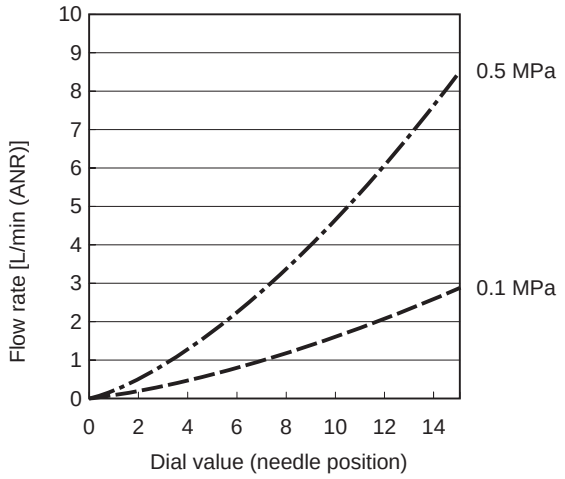

● FSM3-L050/100

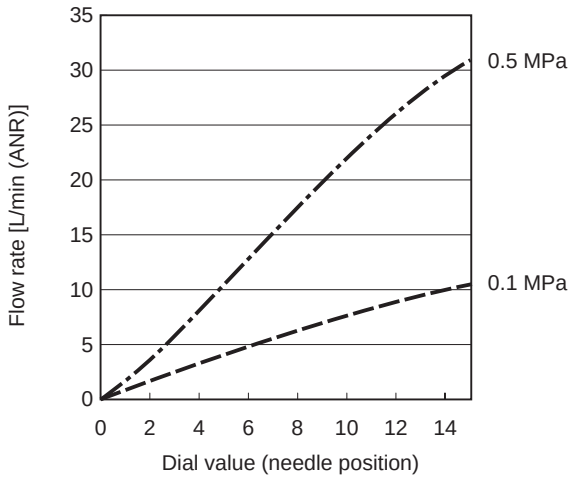

● FSM3-L200/500-H04/H06

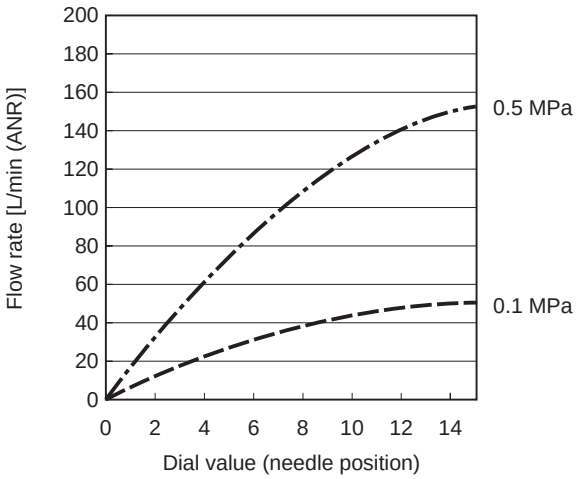

● FSM3-L500/101/201-H08/H10

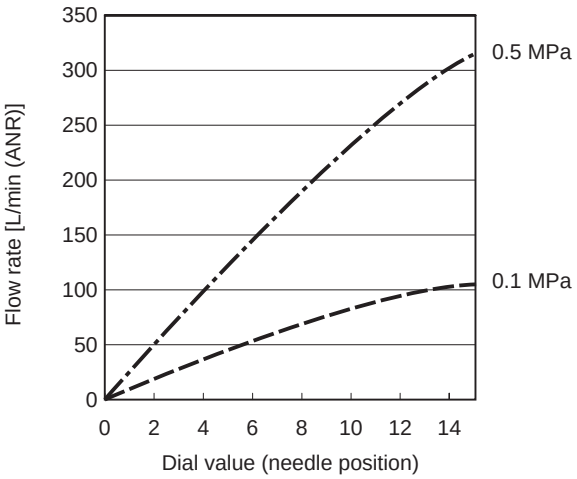

Needle valve flow characteristics (stainless steel body) (for air, nitrogen gas)

● FSM3-L005/010/020U2AA

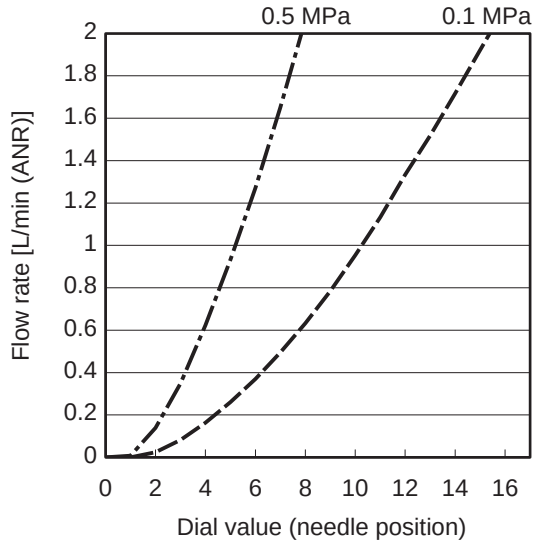

● FSM3-L050/100U2AA

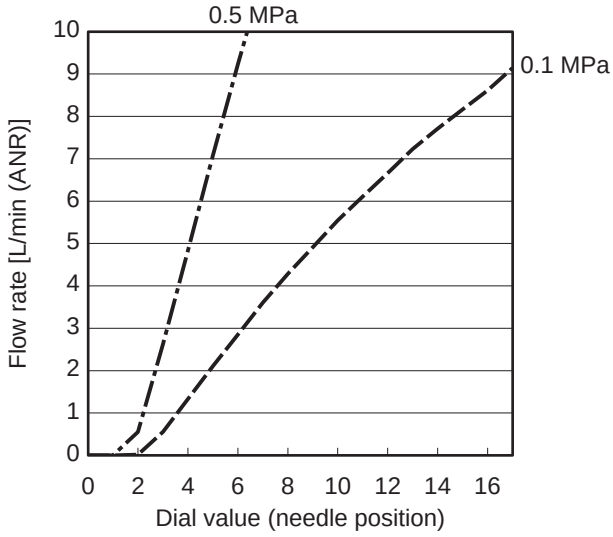

● FSM3-L200/500U2AA

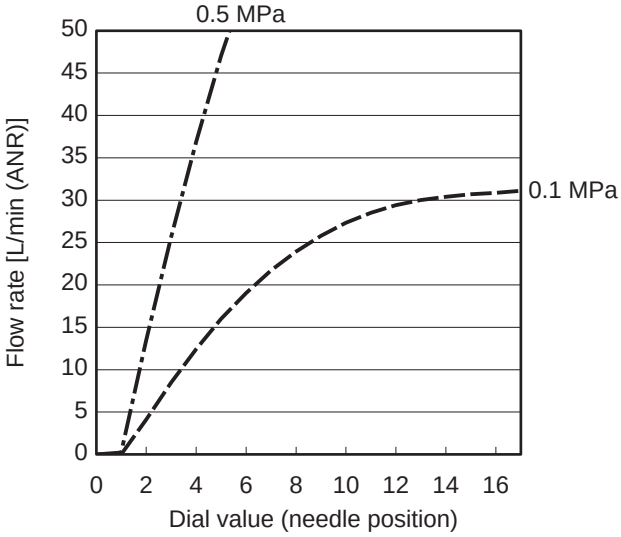

● FSM3-L500/101/201U2BA

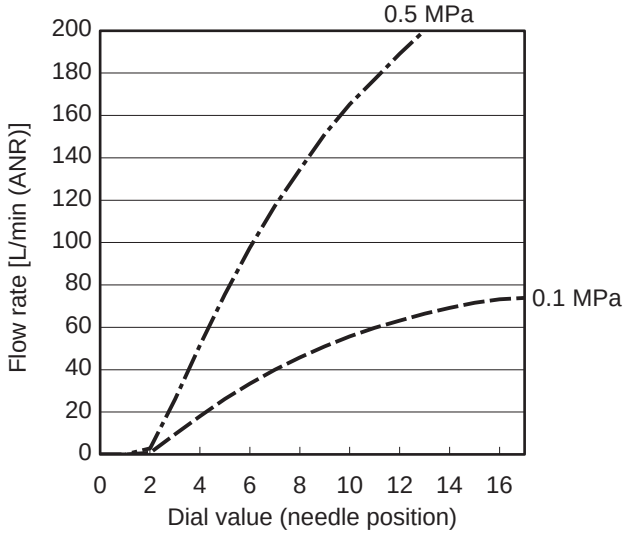

Measurement principle of FSM3 Series

The FSM3 Series incorporates a platinum sensor chip machined with silicon micro-machining. The sensor is thermally insulated from the silicon substrate. The heating capacity is extremely low, enabling high sensitivity with a high-speed response.

At the sensor, two temperature sensors are arranged with a heater in between. Platinum, which has a resistance that changes based on temperature, is used for the temperature sensor. When the heater is turned ON and heating occurs, the temperature distribution is symmetrical to the center of the heater if there is no flow. When flow is received, the symmetrical property of the temperature distribution is lost, temperature upstream from the heater drops, and temperature downstream rises. This temperature difference appears as the difference in temperature sensor resistance, and varies with the flow rate. When the flow is reversed, the temperature difference (difference in resistance) is inverted. By using this method, the bi-directional flow rate can be detected. This method is suitable for detecting a relatively small flow rate.

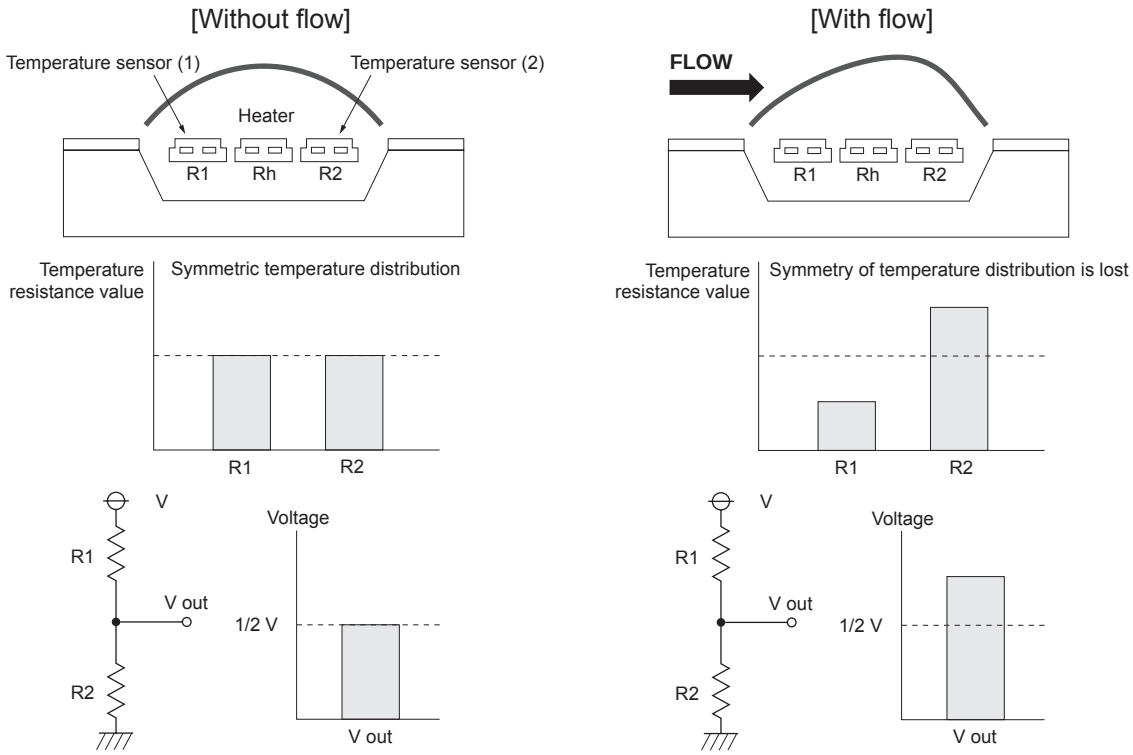

1 Flow rate sensor selection method

Use as a guide for selection of the flow rate range when using the flow rate sensor for suction/unload confirmation or leakage inspection, etc., with the suction nozzle.

The flow rate can be calculated using the effective cross-sectional area of nozzle (pinhole) and the pressure difference inside and outface of nozzle.

● For P1 ≥ 1.89P_2 (acoustic velocity)
$Q = 113.2 \times S \times P_1$

● For P1 < 1.89P_2 (subsonic velocity)
$Q = 226.4 \times S \times \sqrt{P_2 (P_1 - P_2)}$

Q : Flow rate L/min
P_1 : Primary side absolute pressure MPa
P_2 : Secondary side absolute pressure MPa
S : Effective cross-sectional area of nozzle (pinhole) mm^2

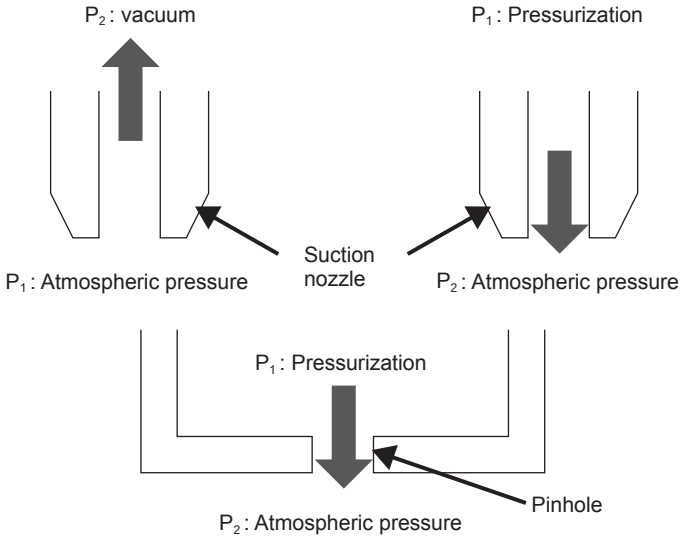

● Example of calculation

The figure below shows the calculated value of flow rate when the nozzle diameter is ø0.1 to 2 and P2 is varied.

	P_1 (MPa) Absolute pressure	P_1 (MPa) Gauge pressure	P_2 (MPa) Absolute pressure	P_2 (MPa) Gauge pressure	Acoustic velocity/subsonic velocity	Calculated flow rate value (L/min)								
						ø0.1	ø0.2	ø0.3	ø0.4	ø0.5	ø0.7	ø1	ø1.5	ø2
Vacuum	0.1013	0	0.0313	−0.07	Acoustic velocity	0.090	0.360	0.810	1.440	2.250	4.411	9.002	20.254	36.007
	0.1013	0	0.0413	−0.06	Acoustic velocity	0.090	0.360	0.810	1.440	2.250	4.411	9.002	20.254	36.007
	0.1013	0	0.0513	−0.05	Acoustic velocity	0.090	0.360	0.810	1.440	2.250	4.411	9.002	20.254	36.007
	0.1013	0	0.0613	−0.04	Subsonic velocity	0.088	0.352	0.792	1.408	2.200	4.312	8.800	19.801	35.202
	0.1013	0	0.0713	−0.03	Subsonic velocity	0.082	0.329	0.740	1.315	2.055	4.028	8.220	18.494	32.878
	0.1013	0	0.0813	−0.02	Subsonic velocity	0.072	0.287	0.645	1.147	1.792	3.512	7.166	16.125	28.666
	0.1013	0	0.0913	−0.01	Subsonic velocity	0.054	0.215	0.483	0.859	1.343	2.631	5.370	12.083	21.480
Blow (leakage inspection)	0.1113	0.01	0.1013	0	Subsonic velocity	0.057	0.226	0.509	0.905	1.414	2.772	5.657	12.727	22.626
	0.1213	0.02	0.1013	0	Subsonic velocity	0.080	0.320	0.720	1.280	2.000	3.920	8.000	17.999	31.998
	0.1413	0.04	0.1013	0	Subsonic velocity	0.113	0.453	1.018	1.810	2.828	5.543	11.313	25.454	45.252
	0.1613	0.06	0.1013	0	Subsonic velocity	0.139	0.554	1.247	2.217	3.464	6.789	13.856	31.175	55.423
	0.1813	0.08	0.1013	0	Subsonic velocity	0.160	0.640	1.440	2.560	4.000	7.840	15.999	35.998	63.996
	0.2013	0.1	0.1013	0	Acoustic velocity	0.179	0.716	1.610	2.862	4.472	8.765	17.888	40.248	71.552
	0.3013	0.2	0.1013	0	Acoustic velocity	0.268	1.071	2.410	4.284	6.694	13.119	26.774	60.242	107.096
	0.4013	0.3	0.1013	0	Acoustic velocity	0.357	1.426	3.209	5.706	8.915	17.474	35.660	80.236	142.641
	0.5013	0.4	0.1013	0	Acoustic velocity	0.445	1.782	4.009	7.127	11.137	21.828	44.547	100.230	178.186
	0.6013	0.5	0.1013	0	Acoustic velocity	0.534	2.137	4.809	8.549	13.358	26.182	53.433	120.224	213.731

(CAUTION)
● When there is a leakage in the piping, etc., the actual flow rate becomes larger than the calculated value. When selecting the flow rate, consider the amount of leakage in the piping.
● When there is a portion narrower than the suction nozzle diameter in the middle of the piping, the flow rate may be reduced to lower than the calculated value.
In addition, suction confirmation, etc., may become impossible.
● The effective cross-sectional area is just a guideline. When the nozzle is long and thin, the effective cross-sectional area becomes smaller than the opening area.
● The response time is determined by the inner volume of the piping from the flow rate sensor to suction nozzle (pinhole). For high-speed detection, reduce the inner volume of the piping as much as possible by installing a flow rate sensor near the suction nozzle, etc.

Product weight

Resin body

[Unit: g]

Fitting		LCD display		Bar display	IO-Link
Model No.	Description	Without needle valve	With needle valve		
BH1	Push-in (for ø4 mm straight)	60	90	50	50
CH1	Push-in (for ø6 mm straight)	50	80	40	50
DH1	Push-in (for ø8 mm straight)	80	120	70	80
EH1	Push-in (for ø10 mm straight)	80	120	70	80
HH1	Push-in (for ø1/4" straight)	60	90	50	50
JH1	Push-in (for ø3/8" straight)	80	120	70	80
AA1	Rc1/8 Straight	60	90	50	50
BA1	Rc1/4 Straight	60	100	50	60
CA1	Rc1/2 Straight	120	–	110	120
AF1	G1/8 Straight	70	100	60	70
BF1	G1/4 Straight	85	125	75	85
CF1	G1/2 Straight	120	–	110	120
AB1	G1/8 Straight	60	90	50	60
BB1	G1/4 Straight	70	110	60	70
CB1	G1/2 Straight	140	–	130	140
AC1	NPT1/8 Straight	50	80	50	50
BC1	NPT1/4 Straight	60	100	50	60
CC1	NPT1/2 Straight	120	–	110	120
BH2	Push-in (for ø4 mm elbow)	70	100	60	60
CH2	Push-in (for ø6 mm elbow)	60	90	50	60
DH2	Push-in (for ø8 mm elbow)	100	140	90	90
EH2	Push-in (for ø10 mm elbow)	100	140	90	100
HH2	Push-in (for ø1/4" elbow)	70	100	60	60
JH2	Push-in (for ø3/8" elbow)	100	140	90	100
AA2	Rc1/8 Elbow	70	100	60	60
BA2	Rc1/4 Elbow	80	120	70	80
AF2	G1/8 Elbow	80	110	70	80
BF2	G1/4 Elbow	105	145	95	105
AB2	G1/8 Elbow	70	100	60	70
BB2	G1/4 Elbow	90	130	80	90
AC2	NPT1/8 Elbow	70	100	60	60
BC2	NPT1/4 Elbow	80	120	70	80

Stainless steel body

[Unit: g]

Fitting		LCD display		Bar display	IO-Link
Model No.	Description	Without needle valve	With needle valve		
AA1	Rc1/8 Straight	100	165	90	95
BA1	Rc1/4 Straight	115	200	105	110
CA1	Rc1/2 Straight	420	–	410	420
AF1	G1/8 Straight	155	220	145	150
BF1	G1/4 Straight	190	275	180	185
CF1	G1/2 Straight	420	–	410	420
AB1	G1/8 Straight	100	165	90	95
BB1	G1/4 Straight	110	195	100	105
CB1	G1/2 Straight	440	–	430	440
AC1	NPT 1/8 Straight	100	165	90	95
BC1	NPT 1/4 Straight	115	200	105	110
CC1	NPT 1/2 Straight	420	–	410	420
AD1	1/4" double barbed fitting (500 mL/min to 50 L/min)	155	220	145	150
BD1	1/4" double barbed fitting (50 L/min to 200 L/min)	190	275	180	190
AE1	1/4" JXR male fitting (500 mL/min to 50 L/min)	155	220	145	150
BE1	1/4" JXR male fitting (50 L/min to 200 L/min)	190	275	180	190

MEMO

SCPD3
SCM
SSD2
MDC2
SMG
LCM
LCR
LCG
LCX
STM
STG
STR2
MRL2
GRC
Cylinder switch
MN3E MN4E
4GA/B
M4GA/B
MN4GA/B
F.R (module unit)
Clean F.R
Precision R
Press gauge Diff. press gauge
Electro-pneumatic R
Speed controller
Auxiliary valve
Fitting/ tube
Clean air unit
Pressure sensor
Flow rate sensor
Valve for air blow
Ending

Names and functions of display/operation section (LCD display)

● Names of display parts

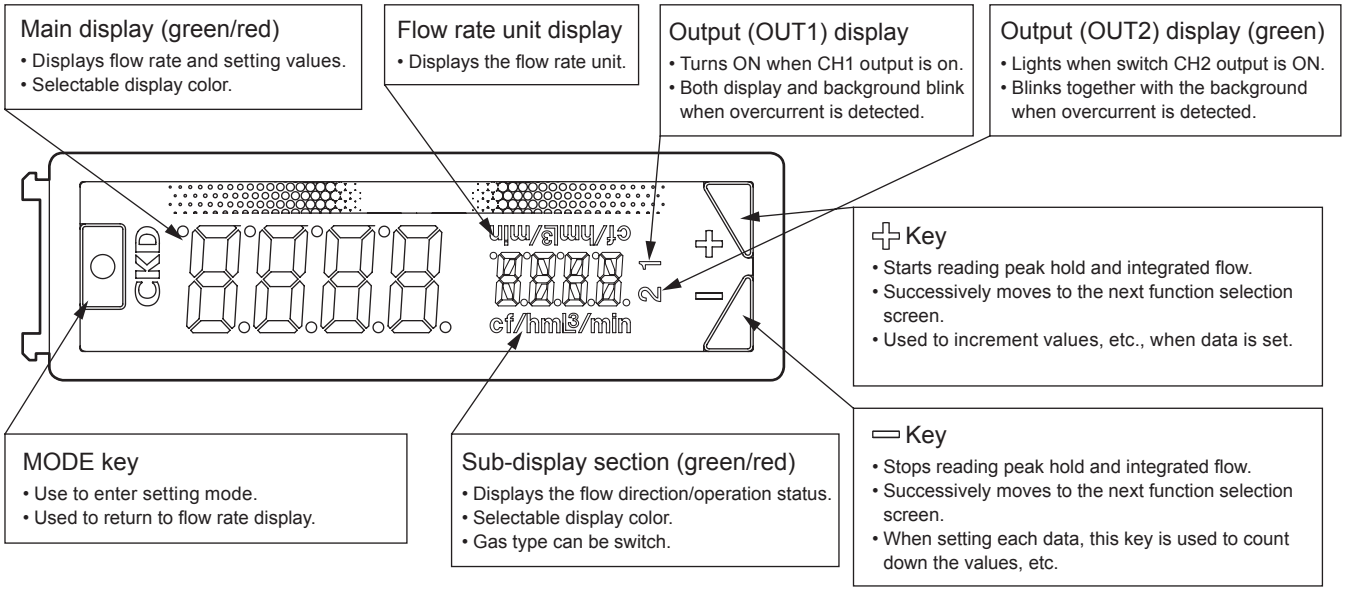

● Error code

Error code	Cause	Countermeasures
Hi	The flow rate exceeds the flow rate display range.	Reduce the instantaneous flow rate value to within the flow rate range.
	Sensor has failed.	Confirm that the flow rate is within the flow rate range, and turn power ON again. If the error is not resolved, a probable cause is a product failure. Replace the product. If you feel that there is an abnormality with the product, stop use and contact your CKD branch or dealer.
Lo	The flow rate is below the lower limit of the flow rate display range.	Increase the instantaneous flow rate value to within the flow rate range.
	Sensor has failed.	Confirm that the flow rate is within the flow rate range, and turn power ON again. If the error is not resolved, a probable cause is a product failure. Replace the product. If you feel that there is an abnormality with the product, stop use and contact your CKD branch or dealer.
E01	An error occurred during CPU processing.	Then turn power ON again. If the abnormality is not resolved, a probable cause is a product failure. Replace the product. If you feel that there is an abnormality with the product, stop use and contact your CKD branch or dealer.
E02	The zero adjustable range has been exceeded.	Make sure to set the flow rate to zero, and then perform the zero adjustment.
E03	An error occurred during EEPROM reading or writing operation.	Then turn power ON again. If the abnormality is not resolved, a probable cause is a product failure. Replace the product. If you feel that there is an abnormality with the product, stop use and contact your CKD branch or dealer.
E04	An error occurred during memory reading or writing.	Then turn power ON again. If the abnormality is not resolved, a probable cause is a product failure. Replace the product. If you feel that there is an abnormality with the product, stop use and contact your CKD branch or dealer.
E06	Sensor abnormality has occurred.	Then turn power ON again. If the abnormality is not resolved, a probable cause is a product failure. Replace the product. If you feel that there is an abnormality with the product, stop use and contact your CKD branch or dealer.
E09	Copying of settings failed.	Check connections and perform the operation again.
Loc	Button operation is locked.	Release the lock before operating the buttons.
0000 PAS	A password is set.	Enter the set password. *Take care not to forget your password.
Blinking of output display (Switch output is not output)	The switch output's overcurrent protection circuit has operated.	Check whether load current exceeds the rating. Correctly connect, then turn the power ON again.

Names and functions of display/operation section (LCD display)

The functions and various settings are made during the normal flow rate display and during each mode.
Each mode is divided into a maintenance mode, SET mode and setting monitor mode according to the frequency of use.

● Normal operation (RUN mode)

Item	Explanation	Default setting
Instantaneous flow rate display	The instantaneous flow rate is displayed.	Display (measuring)
Peak hold function	Max. and min. values for the flow rate within a set interval are displayed.	Non-display (stopped)
CO_2 discharge display	By setting the power, discharge pressure, and flow rate of the compressor, as well as the power to CO2 conversion coefficient, you can learn how much CO2 is being discharged. (reference value obtained by calculation) This is available only when the gas type is set to air.	Non-display (stopped)
Integrating flow display	The integrated flow can be displayed. The switch output function includes a function to turn the switch ON/OFF at a level higher than the recommended cumulative value, and an integrated pulse function to output the pulse at a set cumulative value.	Non-display (measuring)

● SET Mode

No.	Item	Explanation	Default setting
F.01	Selection of CH1 operation	Select the CH1 setting. Switch output operation and integrated pulse can be set.	Without switch output
F.02	Selection of CH2 operation	Select the CH2 setting. Select whether to use CH2 as a switch output, or to use as an external input (integrated value reset/auto reference).	Without switch output
F.03	Integrating function settings	Whether to continuously acquire integrated flow values or set a time can be selected. Whether or not to hold that data also can be selected.	Continuous acquisition: Data hold OFF
F.04	Sub-screen display setting	Set the sub-display section's display method. The display can be switched to "flow direction", "reference state", "gas type", or "numbering display".	Flow direction
F.05	Display color setting	Set the display color. (red, green) The color for a normal display and for switch output ON can be set.	At normal: Green At switch ON: Red
F.06	Setting of flow rate direction (Bi-directional type)	Setting the flow rate direction. Setting available for bi-directional, one-side forward direction or one-side reverse direction.	Bi-direction
F.07	Display inversion function	The LCD display can be flipped vertically.	Standard display
F.08	Reference state setting	Whether to set standard state or reference state can be selected. Standard state (ANR): Converted into volumetric flow rate at 20°C, 1 barometric pressure, 65%RH (For gas types other than air: 20°C, 1 barometric pressure, 0% RH) Reference state (NOR): Converted into volumetric flow rate at 0°C, 1 barometric pressure, 0%RH	ANR
F.09	Unit setting (overseas models only)	The unit can be set. Can be selected from L/min and cf/h (cf/min).	Domestic model: L/min Overseas model: L/min
F.10	Display cycle setting	The digital display refresh cycle can be set in three stages from 0.25 sec to 1 sec. If the display flickers, it may be improved by setting a longer display refresh cycle.	0.25 sec
F.11	Analog output Setting response time	Set the response time. Analog output can be set in seven steps from 0.05 sec to approx. 1.50 sec. Chattering and mis-operation caused by sudden flow rate changes or noise are prevented.	0.5 sec
F.12	Numbering setting	Numbering can be set.	0000
F.13	Gas type switch	The measured gas can be switched. (Model with full scale flow rate of 200 L/min or below) (The gas type cannot be switched on an oxygen type.)	Air
F.14	Setting ECO mode	ECO mode can be set. If the buttons are not operated for approx. one minute, the ECO mode will activate and turn OFF the display's backlight. Current consumption can be reduced with this mode.	OFF
F.15	CO_2 discharge calculation setting	The CO_2 discharge calculation can be set. Set you compressor power, discharge pressure, flow rate, and CO_2 conversion coefficient.	• Power: 0.20 KW • Pressure : 0.10 MPa • Flow rate: 100 L/min • Conversion factor: 0.000 kg (CO_2) /kwh
F.16	Lock setting	The key lock and password methods can be set. Use these selectively depending on the working environment.	OFF
F.17	Peak hold setting	Whether to continuously acquire peak hold values or set a time can be selected. Whether or not to hold that data also can be selected.	Continuous acquisition: Data hold OFF

● Maintenance mode

No.	Item	Explanation	Default setting
F.91	Forced output function	Use this function to forcibly turn the switch output ON and confirm the wiring connection or initial operation of the input device.	–
F.92	Zero adjustment	The zero point deviation is corrected.	Adjust value: 000
F.93	Setting copy function	Set values can be copied if the model supports copying between two FSM3's. (Copying is possible only between products with the same model No.)	–
F.99	Reset function	Returns settings to their default states.	–

● Setting monitor mode

Item	Explanation	Default setting
Setting monitor function	Details set in the SET mode can be confirmed. (Setting details cannot be edited.)	–

SCPD3
SCM
SSD2
MDC2
SMG
LCM
LCR
LCG
LCX
STM
STG
STR2
MRL2
GRC
Cylinder switch
MN3E MN4E
4GA/B
M4GA/B
MN4GA/B
F.R (module unit)
Clean F.R
Precision R
Press gauge Diff. press gauge
Electro-pneumatic R
Speed controller
Auxiliary valve
Fitting/ tube
Clean air unit
Pressure sensor
Flow rate sensor
Valve for air blow
Ending

Names and functions of display/operation section (bar display type)

● Names of display parts

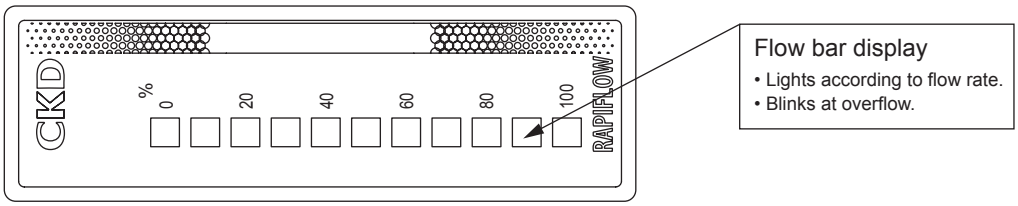

[Example] Display in the case of FSM3-B101□□□□□□□.

Flow rate	Uni-direction	Bi-directional
0%	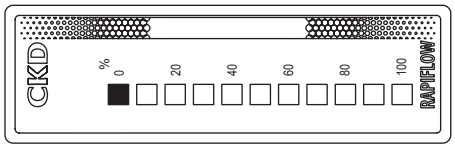	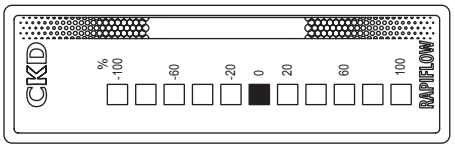
+60% (Forward direction)	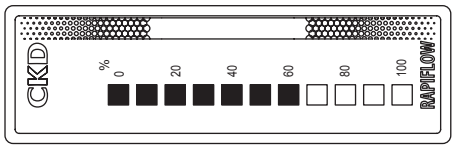	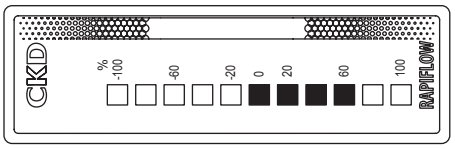
+110% (Forward direction) Blinks at overflow. *Blinks at +110% F.S. or more.	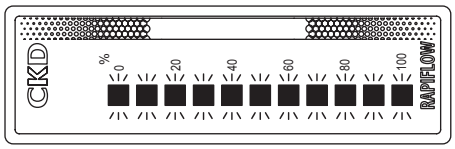	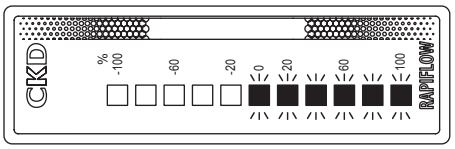
−10% (Reverse direction)	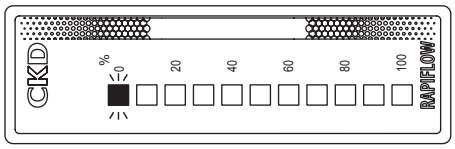	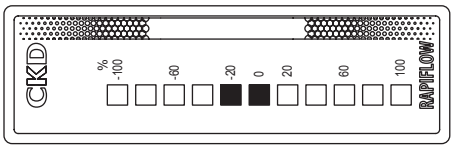
−110% (Reverse direction)	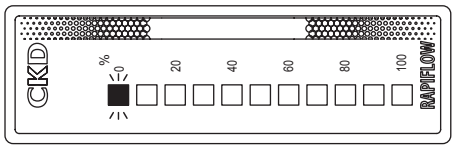	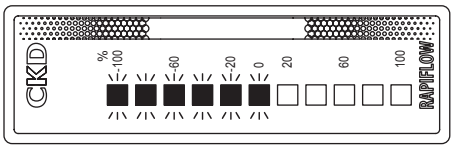

● Error code

Error code	Cause	Countermeasures
The third from left blinks 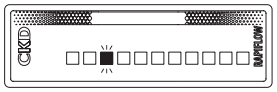	An abnormality occurred during memory reading or writing.	Then turn power ON again. If the abnormality is not resolved, a probable cause is a product failure. Replace the product. If you feel that there is an abnormality with the product, stop use and contact your CKD branch or dealer.
[Uni-direction] All blink 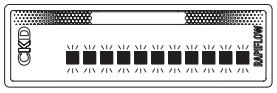	The flow rate exceeds the flow rate display range.	Reduce the instantaneous flow rate value to within the flow rate range.
[Bi-directional] The right half blinks 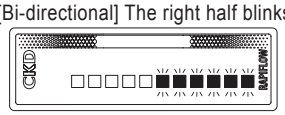	Sensor failure	Confirm that the flow rate is within the flow rate range, and turn power ON again. If the error is not resolved, a probable cause is a product failure. Replace the product. If you feel that there is an abnormality with the product, stop use and contact your CKD branch or dealer.
[Uni-direction] The leftmost blinks 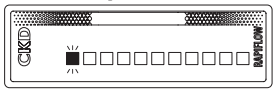	The flow rate is below the lower limit of the flow rate display range.	Increase the instantaneous flow rate value to within the flow rate range.
[Bi-directional] The left half blinks 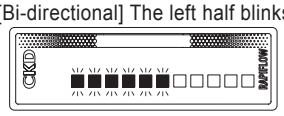	Sensor failure	Confirm that the flow rate is within the flow rate range, and turn power ON again. If the error is not resolved, a probable cause is a product failure. Replace the product. If you feel that there is an abnormality with the product, stop use and contact your CKD branch or dealer.

MEMO

SCPD3
SCM
SSD2
MDC2
SMG
LCM
LCR
LCG
LCX
STM
STG
STR2
MRL2
GRC
Cylinder switch
MN3E MN4E
4GA/B
M4GA/B
MN4GA/B
F.R (module unit)
Clean F.R
Precision R
Press gauge Diff. press gauge
Electro-pneumatic R
Speed controller
Auxiliary valve
Fitting/ tube
Clean air unit
Pressure sensor
Flow rate sensor
Valve for air blow
Ending

Names and functions of display/operation section (IO-Link)

● IO-Link

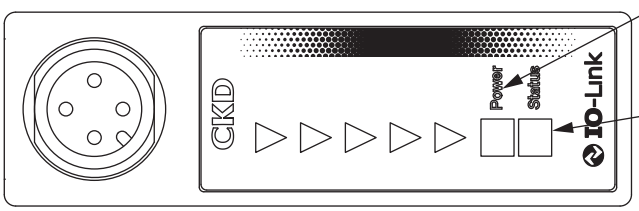

Power lamp (green)
- Lights when power supply is ON.
- Blinks during IO-Link communication.

Status lamp (green, orange, red)
- Green ..... Lights when the flow rate is within the specified range.
- Orange .... On when the flow rate exceeds 100% F.S. and is 110% F.S. or below.
- Red..... On when the flow rate exceeds 110% F.S. Lights when an error occurs.

* The lamp turns off when the flow rate is under ±3% F.S.

● Communication specifications

Item	Details
Communication protocol	IO-Link
Communication protocol version	V1.1
Transmission bit rate	COM2 (38.4 kbps)
Port	Class A
Process data length (input)	4 bytes
Process data length (output)	0 byte
Min. cycle time	5 ms
Data storage	1 kbyte
SIO mode support	None

Bit	31	30	29	28	27	26	25	24	23	22	21	20	19	18	17	16
Data name	MSB															LSB
	Instantaneous flow rate															
Data range	Refer to Table 1															
Format	Integer 16															

Bit	15	14	13	12	11	10	9	8	7	6	5	4	3	2	1	0
Data name	Error	WARNING	-	-	-	-	Switch output		Vacant							
							2	1								
Data range	True/False															
Format	Boolean															

Data range (Table 1)

			005	010	020	050	100	200	500	101	201	501	102
Data range (□/min)	[B]	U	−50 to 550 mL	−100 to 1100 mL	−0.20 to 2.20 L	−0.50 to 5.50 L	−1.00 to 11.00 L	−2.0 to 22.0 L	−5.0 to 55.0 L	−10.0 to 110.0 L	−20 to 220 L	−50 to 550 L	−100 to 1100 L
		B	−550 to 550 mL	−1100 to 1100 mL	−2.20 to 2.20 L	−5.50 to 5.50 L	−11.00 to 11.00 L	−22.0 to 22.0 L	−55.0 to 55.0 L	−110.0 to 110.0 L	−220 to 220 L	−550 to 550 L	−1100 to 1100 L

* The data range changes when CO_2 is set as the gas type. Refer to page 1087.
* Download the IO-Link configuration files (IODD) from the CKD website (https://www.ckd.co.jp/en/).

● Explanation of functions (IO-Link)

Item	Explanation	Default setting
Instantaneous flow rate display	The instantaneous flow rate is displayed.	–
Integrating flow display	Displays the integrating flow counted after indicating to start logging.	Stop
Instantaneous flow rate peak value display (Peak hold function)	Displays the maximum and minimum instantaneous flow rate values during the period between indicating to start logging and stop logging.	Stop
Error display	Displays the error details.	–
Warning display (WARNING)	Displays the warning details.	–
Power ON time display	Displays the total power ON time from the start of use. This time is not reset even if the power turns OFF. (Also not reset when using the reset setting)	–
Operation for switch output function	The switch output operation function can be set. This function can be used to monitor whether the flow rate is within the set range or monitor whether it exceeds the set flow rate.	Not set
Flow rate standard setting	The flow rate standard can be selected. Standard condition (ANR): Converted into volumetric flow rate at 20°C, 1 barometric pressure, 65% RH (For gas types other than air: 20°C, 1 barometric pressure, 0% RH) Standard condition (NOR): Converted into volumetric flow rate at 0°C, 1 barometric pressure, 0% RH	ANR
Gas type switch	The measured gas can be switched. (Model with full scale flow rate of 200 L/min or below. The gas type cannot be switched on an oxygen type)	Air
Change travel average (Setting response time)	The travel average when measuring can be set. The average can be set in seven steps from 50 msec to 1500 msec. Chattering and mis-operation caused by sudden flow rate changes or noise are prevented.	50msec
Lock setting	Parameter Lock can be set, which disables changing the parameters of the unit. Data Storage Lock can be set, which prohibits uploading and downloading set values to the master. (Parameter Lock and Data Storage Lock and be set simultaneously)	Not set
Zero adjustment	The zero point deviation is compensated. (within ±10% F.S.)	Not set
Data storage function	Uploading set values to the master and downloading set values from the master are possible. (Can be copied by the same model No.)	–
Reset function	Returns the settings to the factory settings. (Cannot reset while Parameter Lock is enabled)	–
Unit identification function	The model No., serial No. or other unit-unique information can be confirmed on the network.	–

Optional products

Discrete option model No. method

FSM3 - K - P70

Ⓐ Option

Ⓑ Clean-room specifications

Code	Description
Ⓐ Option	
A	5-conductor lead wire 1 m (for LCD display)
B	5-conductor lead wire 3 m (for LCD display)
C	4-conductor lead wire 1 m (for bar display)
D	4-conductor lead wire 3 m (for bar display)
G	M12 both-end lead wire with connector (3 m) (for IO-Link)
H	Bracket 1 (for models with a flow rate range below 200 L/min)
J	Bracket 2 (for models with a flow rate range of 500 L/min or 1000 L/min)
K	Panel mounting kit 1 (for sensor unit models with a flow rate range below 200 L/min)
L	Panel mounting kit 2 (for needle valve integrated models with a flow rate range below 200 L/min)
M	DIN rail mounting kit (for models with a flow rate range below 200 L/min)

Ⓑ Clean-room specifications	
P70	Anti-dust generation (FSM3-G-P70 cannot be selected.)

Lead wire dimensions

● FSM3−A, B-P70

5-conductor lead wire (for LCD display, for separated display)

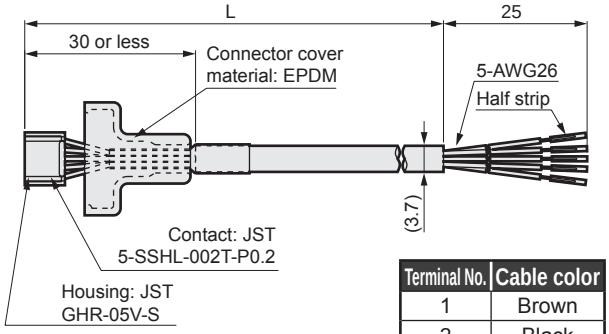

Model No.	L dimensions	Weight g
FSM3-A	1040 ±20	21
FSM3-B	3040 ±20	57

Terminal No.	Cable color
1	Brown
2	Black
3	White
4	Gray
5	Blue

Lead wire dimensions

● FSM3−C, D-P70

4-conductor lead wire (for bar display)

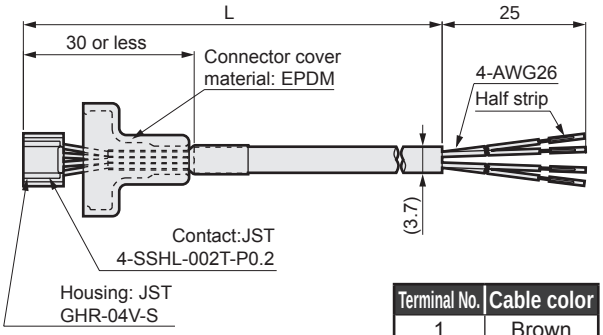

Model No.	L dimensions	Weight g
FSM3-C	1040 ±20	19
FSM3-D	3040 ±20	52

Terminal No.	Cable color
1	Brown
2	Black
3	White
4	Blue

● FSM3−G-P70

(M12 both-end lead wire with connector)

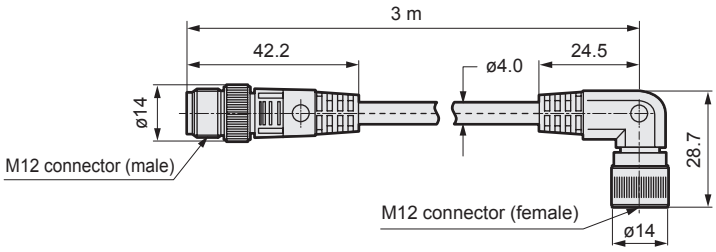

Terminal No.	Cable color
1	Brown
2	White
3	Blue
4	Black

Dimensions with options

● FSM3-M-P70

DIN rail mounting kit

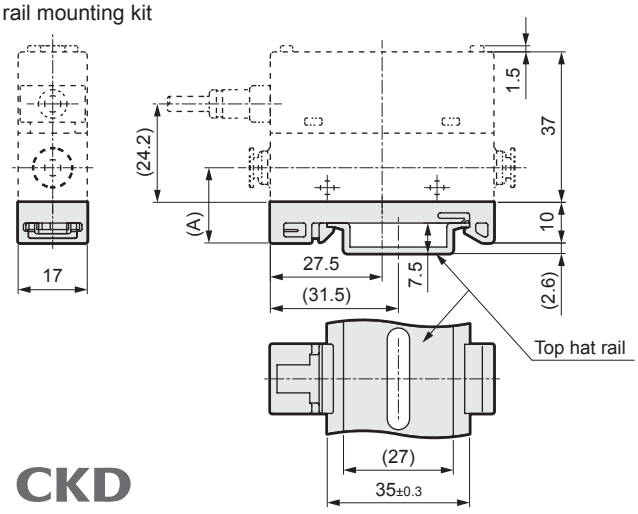

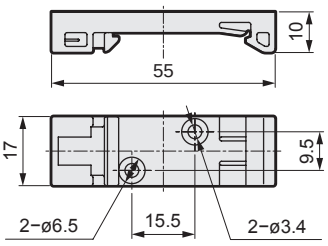

Model No.	Dimension (A)
FSM3-□□□1/BH1/CH1/HH1/AA1/AB1/AC1	18.5
FSM3-□□□1/DH1/EH1/JH1/BA1/BB1/BC1	23.0

Dimensions with options

● FSM3-H-P70

Bracket 1 (for models 200 L or less)

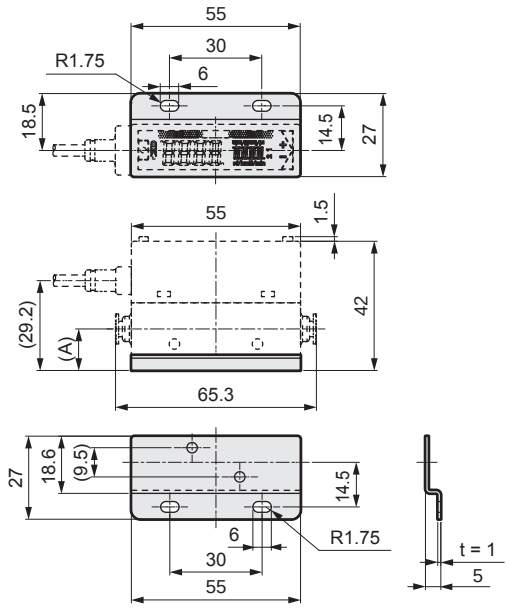

Model No.	Dimension (A)
FSM3-□□□1/BH1/CH1/HH1/AA1/AB1/AC1	13.5
FSM3-□□□1/DH1/EH1/JH1/BA1/BB1/BC1	18.0

● FSM3-J-P70

Bracket 2 (for models 500 or 1000 L)

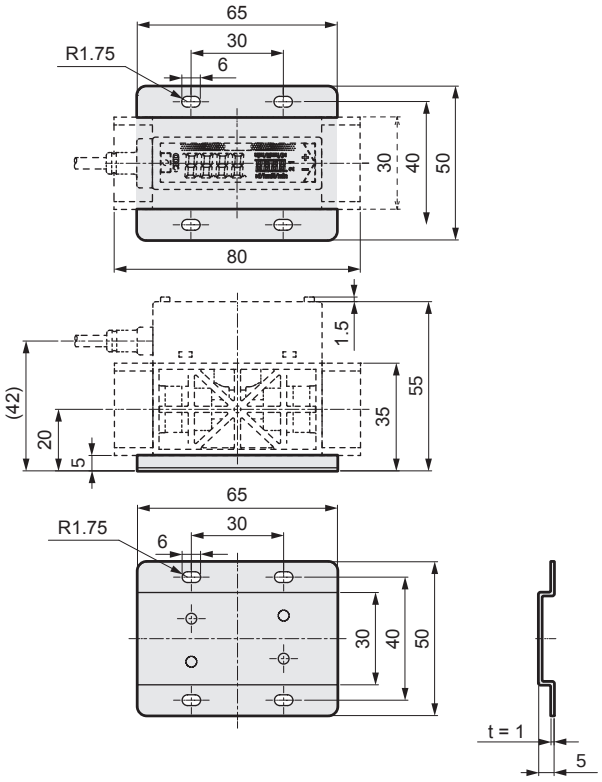

● FSM3-K-P70

Panel mounting kit 1 (for LCD display, separated display)

• LCD display

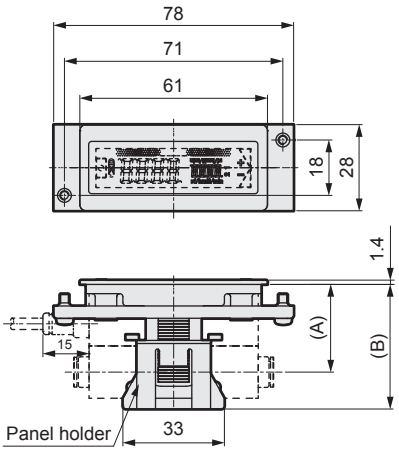

• Separated display

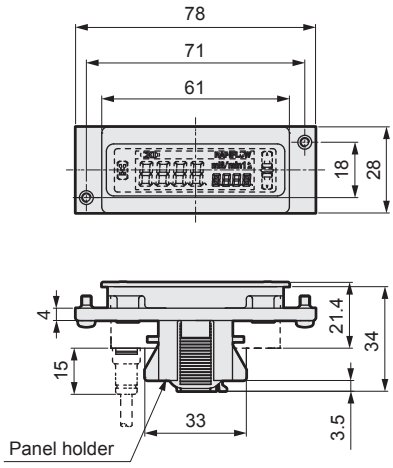

[Panel cut dimension]

In case of single installation

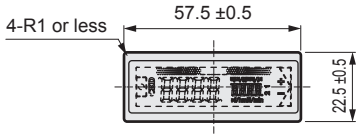

For continuous installation

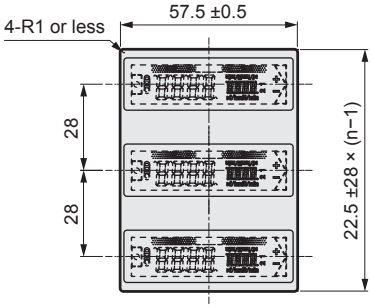

● FSM3-L-P70

Panel mounting kit 2 (for needle valve integrated)

• Needle valve integrated

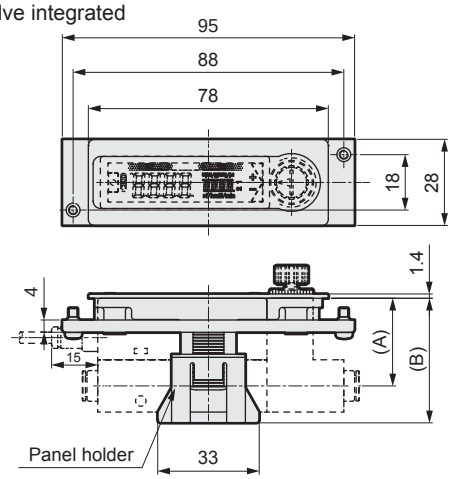

[Panel cut dimension]

In case of single installation

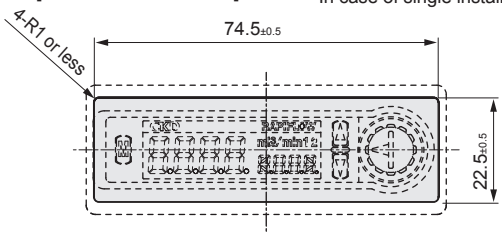

Model No.	Dimension (A)	Dimension (B)
FSM3-□□□1/BH2/CH2/HH2/AA2/AB2/AC2/□□□/N/T	28.5	40.5
FSM3-□□□1/DH2/EH2/JH2/BA2/BB2/BC2/□□□/N/T	30	46.5

Dedicated for small size flow rate sensor RAPIFLOW
Miniature inline filter

FSM-VFM Series

RoHS CAD

Features

Inline filter dedicated for compact flow rate sensor RAPIFLOW FSM, FSM-V Series Due to the small inner volume, the high-speed response at suction confirmation is not affected.

- Miniature which stays out the way and helps save space
- Easy element replacement
- The polyamide resin which has superior chemical resistance is used for the case material
- As the case is transparent, the dirtiness of element can be checked from the outside

Specifications

Descriptions		FSM-VFM-H22	FSM-VFM-H44	FSM-VFM-M55
Working fluid		Clean air (JIS B 8392-1: 2012 (ISO 8573-1: 2010) 1.1.1 to 5.6.2), Compressed air (JIS B 8392-1: 2012 (ISO 8573-1: 2010) 1.1.1 to 1.6.2) *1		
Applicable tube O.D.		ø1.8 (fiber tube)	ø4 (push-in)	Port size M5
Proof pressure MPa		0.75		
Working pressure range MPa		-0.1 to 0.5		
Operating ambient temperature °C		0 to 50		
Material	Case	Polyamide		
	Element	Polypropylene, polyethylene		
Filtration rating μm		10		
Product weight g		5.2	9.5	4.2
Recommended flow rate ℓ/min		10 *2		

*1: Refer to page 1106 for the compressed air quality class according to JIS B 8392-1: 2012 (ISO 8573-1: 2010).
*2: Because the pressure loss becomes large when the flow rate exceeds 10 ℓ/min, use the product with 10 ℓ/min or less.

How to order

FSM - VFM - H44 - B - P70

Model No.

Ⓐ Tube outer diameter
Ⓑ Attached
Ⓒ Clean treatment

Code	Content
Ⓐ Tube outer diameter	
H22	ø1.8 (fiber tube)
H44	ø4 (push-in)
M55	Port size M5
Ⓑ Attached	
Blank	Without bracket
B	Bracket attached
Ⓒ Clean treatment	
	Structure/treatment
P70	Dust generation preventing

- Bracket part model No.

FSM - VFM - B - P70

(Cross-recessed flat head tapping screw M2.5 × 6: 1 pc.)

Dimensions

● FSM-VFM-H22-P70

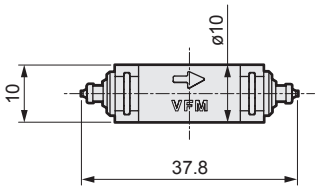

● FSM-VFM-H44-P70

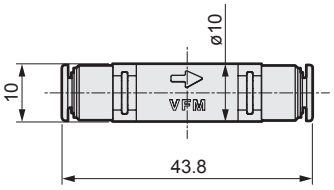

● FSM-VFM-H55-P70

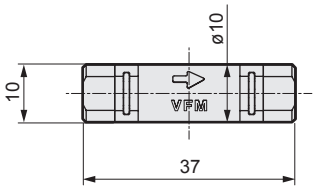

● FSM-VFM-B-P70 (bracket)

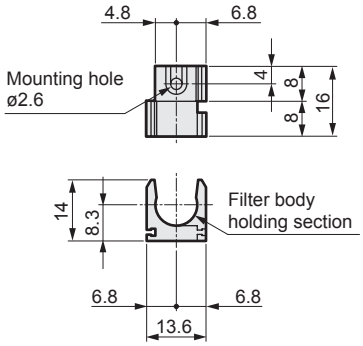

Flow characteristics (FSM-VFM-H44)

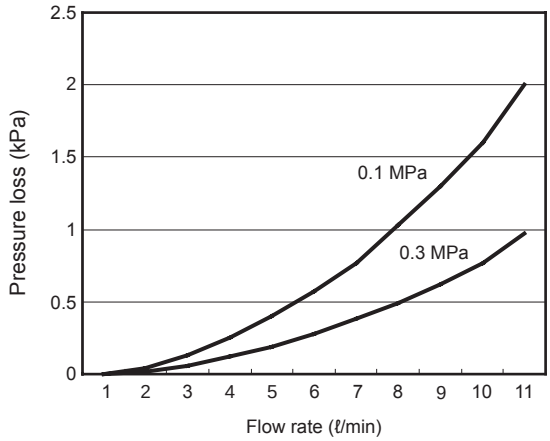

● When using the fiber tube, the pressure loss may become large depending on the piping conditions. Please be careful.

Caution

● This filter has an orientation.
Use a check valve as a countermeasure for preventing the outflow of dirt when used for suction confirmation, etc.

(Example of circuit)

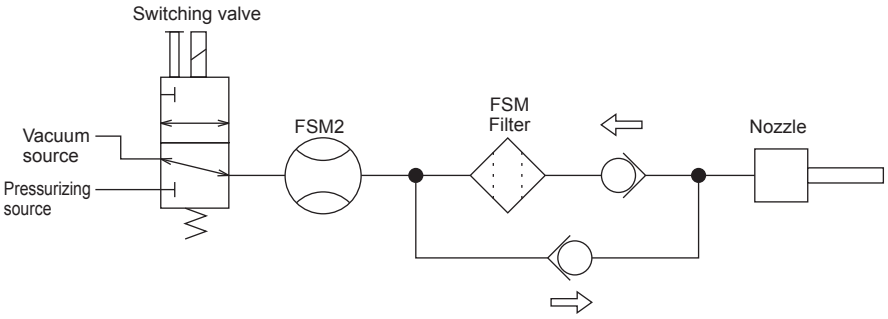

● Refer to page 1125 for other cautions or replacement method of the element.

Pneumatic components: Warning and Cautions

Always read this section before use.
Please see Page 63 in the preface for general precautions on air pressure equipment.

Product-specific precautions: Compact flow sensor FSM3 series

Design/selection

Working fluids

DANGER

- Do not use this product for flammable fluids.

WARNING

- This product cannot be used as a business meter.
  Do not use this product for commercial transactions as it is not compliant with the Measurement Act. Intended applications include industrial sensors.
- Do not use fluids which are not applicable.
- Use dry gas which does not contain corrosive elements such as chlorine, sulfur or acids, and which is clean and does not contain dust or oil mist.
- Depending on the fluid, retaining the fluid for long periods could adversely affect the performance. Do not seal the fluid in the pipe for long periods of time.
- When using compressed air,use clean air that complies with JIS B 8392-1: 2012 Class 1.1.1 to 1.6.2. As compressed air from the compressor contains drainage (water, oil oxides, foreign matter, etc.), install a filter, air dryer, and oil mist filter (micro alescer) on the primary side (upstream side) of the sensor. The sensor's mesh rectifies flow in the pipe. It does not filter out foreign matter, so provide a filter.

[Recommended circuit]

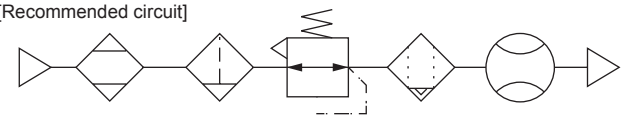

- Working pressure/flow rate range
  Applications exceeding the max. working pressure and specified flow rate range may result in faults. Use this product only within the specified range. If energized in a vacuum state of −0.07 MPa or less, the sensor's heat dissipation performance will suffer, leading to degradation of the sensor.
- When using a valve on the primary face of the sensor, use only valves with oil-prohibited specifications.This sensor could malfunction or fail if exposed to splattering grease, oil, etc. As friction powder may be generated depending on the valve, mount a filter to prevent the powder from entering the sensor.
- The sensor for oxygen gas is a custom model. To prevent ignition accidents, treat the inface of the flow paths on oxygen models in accordance with oil free specifications. Do not allow oxygen gas to flow again when a fluid other than oxygen has flown even once.
- When using with liquefied gases such as carbon dioxide, always vaporize the gas.Failure may result if liquefied gas enters the product.

Working environment

DANGER

- Explosion-proof environments
  Never use this product in an explosive gas atmosphere. The structure is not explosion-proof, and explosions or fires could occur.

WARNING

- Corrosive environments
  Do not use this product in an atmosphere containing corrosive gases such as sulfur dioxide.
- Ambient/fluid temperatures
  Use ambient temperature/fluid temperature from 0 to 50°C within specified range.
  Even if the temperature is within the specified range, do not use this product if the ambient temperature and fluid temperature could suddenly change and cause dew to condense.
- Drip-proof environments
  The degree of protection of this product is equivalent to IP40. Do not install this product where water, salt, dust, or swarf is present or in a pressurized or depressurized environment. The product cannot be used with large temperature variations or high temperature/humidity since condensation may occur inside the body.

Flow rate unit

⚠ CAUTION

■ This product's flow rate is measured at a mass flow rate unaffected by temperature or pressure. The unit is L/min, but this is the display when the mass flow rate is converted to volumetric flow rate at 20°C, 1 barometric pressure (101 kPa), and relative humidity of 65%.
(Conditions for gas types other than air are 20°C, 1 barometric pressure (101 kPa), relative humidity 0%)

Overflow

⚠ CAUTION

■ With each series, the sensor can handle an overflow double the measured range. If dynamic pressure is applied near the maximum working pressure (when a pressure difference exceeding the max. working pressure is applied between primary and secondary sides), the sensor may operate abnormally. If dynamic pressure is applied, such as when a workpiece is filled for leakage inspection, provide a bypass circuit or restrictor so that dynamic pressure is not applied to the sensor.

Integrated needle valve

⚠ CAUTION

■ This valve cannot be used as a stop valve that requires no leakage. Slight leakage is allowed for in this product's specifications.

■ Please be sure to use needle valves as fixed apertures as they do not become linear in accordance with the number of rotations.

Use for suction confirmation, etc.

⚠ CAUTION

■ Provide an air filter upstream from suction to prevent the entry of foreign matter.

■ Consider the atmospheric dew point and the product's ambient temperature, and use the product under conditions in which dew does not condense in pipes.

■ When this product is used for vacuum applications such as air suction, do not bend the tube near the push-in fitting. If stress is applied to the tube near the push-in fitting, insert an insert ring into the tube, and connect the tube to the push-in fitting.

■ Select the flow rate range based on the operating vacuum pressure and suction nozzle.

■ Response time may be delayed by the piping volume between the suction nozzle and this product. In this case, take countermeasures to reduce piping capacity.

■ When the suction confirmation sensor is switched from a pressure sensor (switch) to a flow rate sensor (switch), sensor output (switch output) logic will be reversed. Refer to the drawing below.
Note that the PLC sequence program must be changed or revised.
If source pressure or vacuum source is not supplied when device power is turned on, "flow rate 0" = "sensor output (switch output) ON" status is set at the flow rate sensor (switch). Check that this is not a problem with the PLC sequence program, etc.

	Pressure sensor(switch)	Flow rate sensor(switch)
Suction confirmation	ON at setting value or more	ON at setting value or less
	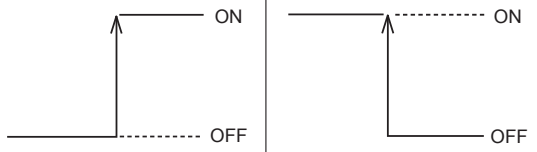	
	Atmospheric pressure side / High vacuum side	Flowrate 0 side / High flow rate side

Others

⚠ CAUTION

■ The flow path is not completely free of dust generation. A final clean filter should be used in circuits where dust generation could be a problem.

Mounting,installation and adjustment

Piping

CAUTION

- Always attach the pipes before starting wiring.
- Align the fluid flow direction to the direction indicated on the pipe when connecting the pipes.
- Do not install the regulator/solenoid valve, etc., immediately before this product. Generated drift may cause errors. Provide a straight pipe with approx. 10 times the bore size when necessary.
- Before installing piping, clean out the pipes using air blower to remove all foreign matter and cutting chips from the pipes. The rectifier or sensor chip could be damaged if a large amount of foreign matter, cutting chips, etc., enters.
- Check that sealant tape or sealant material does not get inside during piping.
  * When using for clean room specifications, make sure that the sealant material matches the system.

When winding fluoro resin sealing tape around threads, wind sealing tape once or twice, leaving two to three threads open at the end of the thread. Press tape with your fingernail tip to stick it onto threads. When using liquid sealant, leave one to two threads open from the end, and avoid applying too much. Check that the sealant does not get on device threads.

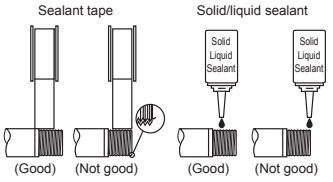

- The resin body screw-in fittings of this product are compliant with push-in fittings for pneumatic pressure. Do not use this product for pneumatic pressure circuits with steel pipe connections. If this product is used for steel pipe connection, the misalignment of the IN side steel pipe bore and OUT side steel pipe bore will cause excessive force to be applied to the body, as well as external leakage, risking damage to the product.
- Attach a wrench to metal sections when tightening pipes so that force is not applied to the resin section.

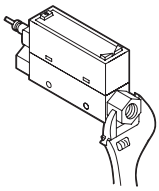

- Refer to the torque below so that excessive screw-in torque or load torque is not applied to the connection port.

[Reference value]

Port thread	Tightening torque N·m
Rc1/8 (G1/8)	**3 to 5**
Rc1/4	**6 to 8**
Rc1/2	**16 to 18**

- When using a push-in fitting, accurately insert tube and confirm that it cannot be pulled out. Cut the tube at a right angle with a dedicated cutter before use.
- Be sure to connect a fitting even when using the metal body with the OUT side opened. The port filter could become detached.
- Make sure that the leakage detection solution does not enter the inface of this product when inspecting the pipe for leaks.
- Do not turn fittings while fluid pressure is still applied to this product. Doing so might result in external leakage. The elbow fitting is not designed with the degree of freedom in the piping leadout direction. However, it is not designed with rotation in mind, so be sure to fix the fitting and not turn it more than necessary.

Mounting

CAUTION

- The LCD display type flow rate meter uses a liquid crystal display. This may be difficult to read depending on the angle.
- Do not install multiple product bodies in close contact. The generation of heat on each part could cause the product's temperature to rise, hastening changes in characteristics or deterioration of the resin material. When using the products in a row, set intervals of distance of 10 mm and over.
- Although the mounting is "unrestricted in vertical/ horizontal direction", the flow rate may vary depending on difference in the mounting orientation or piping conditions.

Lateral mounting (use of through hole)

Vertical mounting (use of female thread on bottom surface)

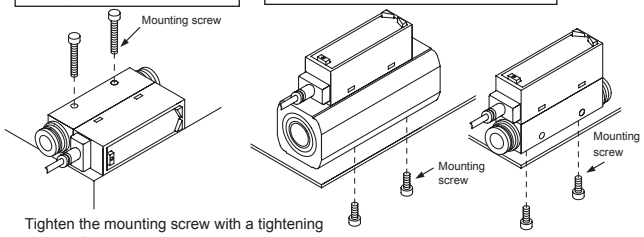

Tighten the mounting screw with a tightening torque of 0.5 N·m.

Bracket mounting (use of dedicated bracket)

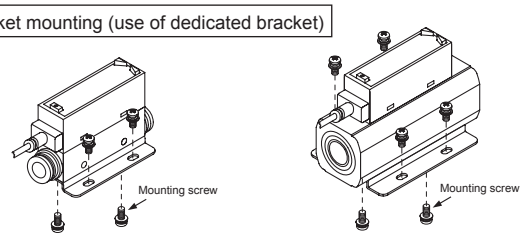

For FSM3-□005 to 201
Bracket model No.: FSM3-B1
Tighten the mounting screw with a tightening torque of 0.5 N·m.

For FSM3-□501 and 102
Bracket model No.: FSM3-B2

Panel mounting

DIN rail mount

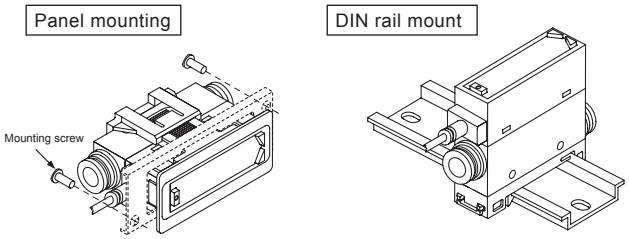

Tighten the mounting screw with a tightening torque of 0.06 N·m.
Complete the piping before assembly.
If the pipes are connected after assembly, excessive stress will be applied and may damage the product.
When using the panel mounting method, make sure that vibration is not applied to the product. When using on a stainless steel body, the vibration will be amplified and could damage the product.

- Note that if you mount the elbow fitting in a downward position, it may interfere with the DIN rail mounting.
- Note that the bracket mounting position may interfere with the elbow fitting.

Wiring

⚠ DANGER

- Use power supply voltage and output within the specified voltage.
  If voltage exceeding the specified voltage is applied, the sensor could malfunction or be damaged, or electrical shock or fire could occur. Do not use any load that exceeds the rated output. Otherwise, output damage or fire may result.
- Stop the control device and equipment and turn power OFF before wiring. Starting operation suddenly could cause unpredictable and dangerous operation. Conduct an energized test with controls and machine devices stopped, and set target switch data. Be sure to discharge any accumulated electrostatic charge among personnel, tools, or equipment before and during work. Connect and wire bending resistant material, such as robot wire material for movable sections.

⚠ WARNING

- Install the product and wiring away from sources of noise, such as power distribution wires.Provide separate countermeasures for surge applied to the power cable. The display or output could fluctuate.
- Do not short-circuit the load. Failure to observe this could result in rupture or burning.
- The output impedance of the analog output voltage output type is approximately 1 kΩ.If the impedance of the connecting load is small, output error increases. Check error with the impedance of the connecting load before using. (The analog output current output type is excluded.)

Example of calculation

FSM3-voltage output impedance: Ro = 1 kΩ
Load internal impedance : Rx = 1 MΩ

$$\text{Output value} = \left(1 - \frac{Ro}{Ro + Rx}\right) \times 100\%$$

$$= \left(1 - \frac{1\ k\Omega}{1\ k\Omega + 1\ M\Omega}\right) \times 100\% \Rightarrow \text{Output value error approx. } 0.1\%$$

- Check wiring insulation.
  Check that wires do not come into contact with other circuits, that no ground faults occur, and that the insulator between terminals is not defective. Overcurrent could flow in and damage the sensor.
- Check line color when wiring. As incorrect wiring could result in sensor damage and malfunctions, check wire color against the instruction manual before wiring.
- Use a stabilized DC power supply within the specified rating that has been insulated from the AC power supply. A non-insulated power supply could result in electrical shock. If power is not stabilized, the peak value could be exceeded. This could damage the product or impair accuracy.
- The power supply for the metal body (stainless steel body) type is a DC stabilized power supply completely isolated from the AC primary side. Connect either the + side or - face of the power to the FG. Between the metal body internal power circuit and metal body, a varistor (limit voltage approx. 40 V) is connected to prevent dielectric breakdown of the sensor. Do not conduct a withstand voltage test or insulation resistance test between the internal power circuit and metal body. Disconnect wiring first if this testing is required. An excessive potential difference between power and metal body will burn internal parts. After installing, connecting and wiring the metal body, electrical welding of the equipment/frame or short-circuit accidents, etc., could cause welding current, transient high voltage caused by welding, or surge voltage, etc., to run through the wiring, ground wire, or fluid path connected between such devices, damaging wires or devices. Conduct any work such as electrical welding after removing this device and disconnecting all electric wires connected to the FG.
- Do not use at levels exceeding the power supply voltage range. If voltage exceeding this range or AC power is applied, the controller could rupture or burn.
- Check that stress (7 N and over) is not directly applied to lead wire leadouts or connectors.
- Please be sure to attach the connector cover after connecting the connector when using an LCD display type or bar display type.
  - The L-shaped cable connector does not rotate. Be sure to never turn it.
  - Please be sure to turn the power OFF before pulling the M12 connector out or inserting it.
  - Please be sure to hold the connector part of the M12 connector when pulling it out or inserting it. Do not pull out by the cable.
  - When fitting the M12 connector; securely position the convex part of the connector terminal on the main body side with the concave part of the cable connector terminal before inserting, and fasten clockwise while holding the knurled part so that the screw threads do not become damaged.
  - Please note that the connector on the main body side can be damaged if the M12 connector is screwed in too tightly. Suggested torque: 0.4 to 0.49 N·m
  - Please keep the length of the wiring between the master and device (the product) 20 m long or shorter when extending the M12 connector cable.

During adjustment

⚠CAUTION

- If switches are operated when fluid is pulsating or flow rate is otherwise unstable, operation may be unstable. In this case, provide sufficient margin between the two setting values and avoid setting switches in an unstable area. Confirm that switch operation is stable before use.

Integrated needle valve

⚠CAUTION

- Do not turn the knob forcibly when fully closing or opening it (0.05 N·m or less). Do not use the lock nut to adjust the needle. Otherwise this could cause needle galling or damage.
- The set flow rate may be unstable if turning the dial of the needle valve forcibly when fully closing. Do not turn the knob forcibly.

During Use & maintenance

⚠ WARNING

- Working conditions for CE compliance
  This product is CE-marked, indicating conformity with the EMC Directives. The standard for the immunity for industrial environments applied to this product is EN61000-6-2; the following requirements must be satisfied in order to conform to this standard:
  Conditions
  - The evaluation of this product is performed by using a lead wire that has a power supply line and a signal line paired to assess the product's performance.
  - This product is not equipped with surge immunity. Implement surge protection measures on the system side.
- Do not disassemble or modify this product. Doing so could result in faults.
- Output accuracy is affected by temperature characteristics and heat generated when energized. Provide a standby time (5 minutes or more) after turning the power ON for use.
- Immediately after power is turned ON, this product does not start flow rate detection switch operation for approx. 5 seconds to complete self-diagnosis. Provide a control circuit/program that ignores signals for at approximately five seconds after power is turned ON.

⚠CAUTION

- If a problem occurs during operation, immediately turn power OFF, stop use, and contact your dealer.
- This product uses a micro-sensor chip, and must be installed where it will not be subject to dropping, impact or vibration. Handle this product as a precision component during installation and transportation.
- Keep this product's flow rate within the rated flow range.
- Use this product within the working pressure range.
- Do not turn the product's fitting while the fluid pressure is ON, since it may cause external leakage. Also avoid use that may cause the fitting to rotate during operation.
- If the output setting value is changed, control system devices could operate unintentionally. Stop devices before changing settings.
- Analog output continues even if the flow rate range is exceeded. With the LCD display, "Hi" or "Lo" will be displayed. With the bar display, the bar display will blink.
  Note that this is outside the guaranteed precision.
- The accuracy may vary from the initial status depending on the working environment or working conditions. It is recommended to check the operation of the product periodically.
- The sensor chip will degrade when used for a long time and cause the detected flow rate to vary. Periodically inspect the sensor chip.
- Replace the working gas in the flow paths before changing the gas type.
- Pay attention to the reverse current caused by disconnected wires/wiring resistance.If other devices, including a flow rate sensor, are connected to the same power supply as the flow rate sensor, and the switch output wire and power cable negative (−) side are short-circuited to check the operation of the control panel input unit, or if the power cable negative (−) side is disconnected, reverse current could flow to the flow rate sensor's switch output circuit and cause damage.

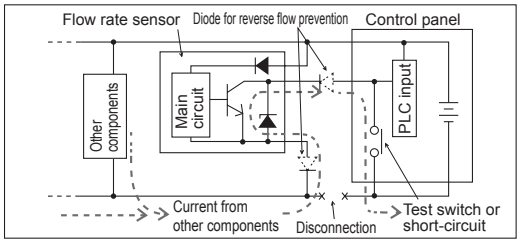

- Take countermeasures as followings to prevent damages caused by reverse current.
  ① Avoid centralizing current at the power cable, especially the minus side power cable, and use as thick a cable as possible.
  ② Limit the number of devices connected to the same power supply as the flow rate sensor.
  ③ Insert a diode parallel to the flow rate sensor's output line to prevent the reverse current.
  ④ Insert a diode parallel to the flow rate sensor power wire's minus (−) side to prevent the reverse current.

■ Care must be taken for surge current leading. When flow rate sensor power is shared with an inductive load that generates surges, such as a solenoid valve or relay, if the circuit is cut off while the inductive load is functioning, surge current could enter the switch output circuit and cause damage depending on where the surge absorbing element is installed.

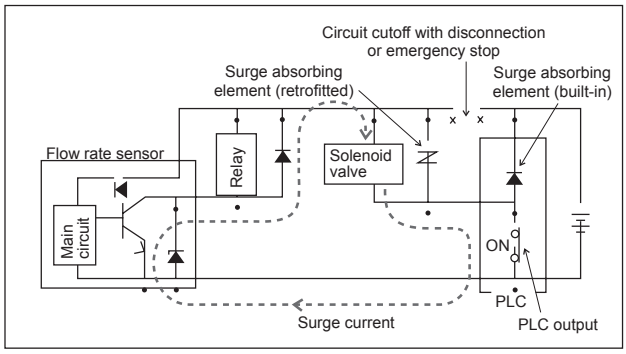

Take the following countermeasures as followings to prevent damages caused by reverse current.

① Separate the power supply for output including the inductive load, such as the solenoid valve and relay, and input, such as the flow rate sensor.

② If a separate power supply cannot be used, directly install a surge absorption element for all inductive loads. Consider that the surge absorption element connected to the PLC, etc., protects only the individual device.

③ Connect a surge absorption element to the following places on the power wiring as shown below as a measure against disconnections in unspecific areas.

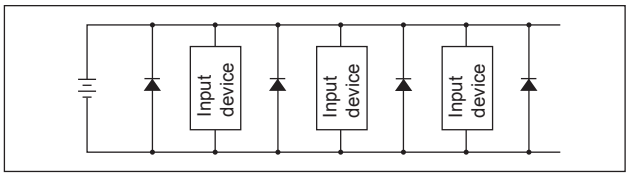

When the devices are connected to a connector, the output circuit could be damaged by the above phenomenon if the connector is disconnected while the power is ON. Turn the power OFF before connecting or disconnecting the connector.

■ When using the LCD display type, do not press down on the display section.This may lead to failure.

■ The case is made of resin. Do not use solvent, alcohol or detergent in cleaning, since the resin could absorb it. There is a risk of affecting the resin. Wipe off dirt with a rag soaked in a diluted neutral detergent solution and wrung out well.

Integrated needle valve

⚠CAUTION

■ Vibration could cause the needle to turn and the flow rate to change.

Product-specific cautions: Separated display FSM2-D Series

Design/selection

⚠CAUTION

■ The corresponding sensor is the voltage output (1 to 5 V) type. If the current output type or other voltage output type is connected, it will not operate properly. When using the FSM3, use the bar display voltage output type. This product is connected to the sensor using the e-CON connector. The e-CON connector is attached with the FSM2-D Series as standard. However, the cable used is within AWG24 to 26, and the insulator O.D. is within 1.0 to 1.2. Confirm that this cable is available before using the e-CON connector. When using with a cable that is outside the range, be sure to separately prepare a usable e-CON connector.
*The FSM2-D socket uses Sumitomo 3M made 37204-62B3-004PL.

Mounting, installation and adjustment

⚠ CAUTION

■ Cut the half-strip section at the end of the e-con connector wiring before use. Insert the wire through to the back of the connector, and securely crimp with pliers, etc.
The wire sheath does not need to be removed.
Check that the pin No. and wire color are correct before crimping.
Incorrect wiring can lead to sensor or separated indicator damage, faults or malfunction.

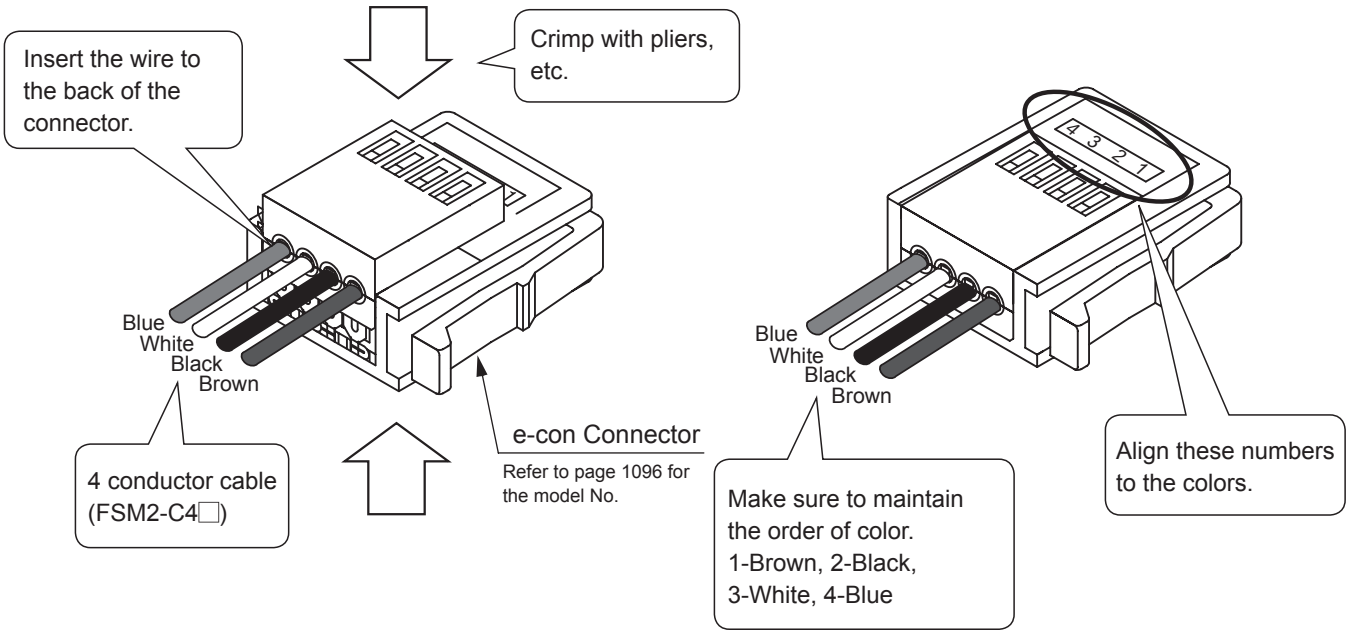

* The e-con connector is attached with the separated display.

■ When attaching or removing the lead wire, hold the connector instead of the cable.
Holding the cable could result in a contact fault, broken wire or short-circuit, etc., could damage the sensor or separated indicator, or cause malfunctions.

■ Do not apply a load of 15 N or over on the lead wire.

Miniature inline filter FSM-VFM Series

During use & maintenance

⚠ CAUTION

■ Do not use this product for vacuum circuits that could come in contact with acids, alkaline, carboxylic acid, other organic compounds, screw lock agent, solvent, or alcohol solutions, or air containing these substances.
The body could be damaged, and cause a hazardous situation.

■ Use the designated tube and plastic plug.

● Tube outer diameter precision
- Polyamide tube ..... Within ±0.1 mm
- Polyurethane tube
  (to ø6) ..... Within ±0.1 mm
  (ø8 to) ..... Within $^{+0.1}_{-0.15}$ mm

● CKD recommended model No.

Plastic plug	GWP□-B Series
Soft nylon tube	F15** Series
Polyurethane tube	U95** Series
Urethane tube	NU-04, 06 Series

■ For cautions regarding push-in fitting, also read "Safety precaution for fitting/tube" on pages 976 to 978.

■ To check the polyamide case for cracks, damage, and other deterioration, perform the periodical inspection/cleaning/replacement.

■ Clogged filter element may cause degradation of vacuum source, so perform periodical inspection/cleaning/replacement of the element.

■ When the body is dismounted to clean or replace the filter element, the pressure in bowl must be reduced to atmospheric pressure before starting work.
Because the direction of flow has an orientation, check the arrow display on body before performing re-assembly.
After performing re-assembly, check if the required degree of vacuum is reached.

■ Rinse the body with water after washing with household neutral detergent.

■ If small objects with small particle diameter such as dust during the suction enter the flow path, the foreign matters could not be filtered and be flowed to the secondary side.
Select a filter matched to the purpose.

Element replacement method

⚠ CAUTION

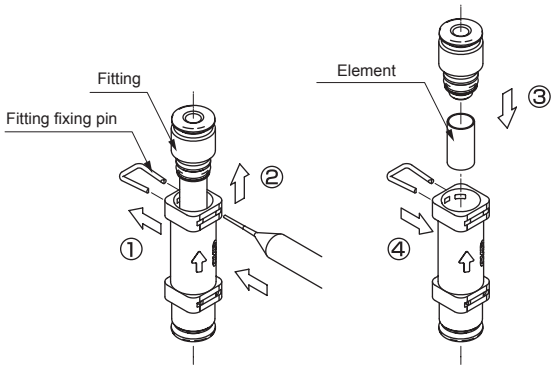

(1) Remove the fitting fixing pin using a jig with a pointed top, etc.
(Make sure not to lose the fitting fixing pin because it will be used again.)
(2) Pull out the fitting.
(3) Replace the element and push in the fitting.
(4) Push in the fitting fixing pin to fix the fitting.

FVB/ADK-Z

2-port solenoid valve for clean blow

For compressed air/inert gas/medium vacuum/low vacuum

CONTENTS

● **2-port direct acting solenoid valve (FVB)** **1128**

● **Pilot kick 2-port solenoid valve Diaphragm structure (ADK-Z)** **1131**

⚠ Safety precautions 1134

2-port direct acting solenoid valve for clean blow
(Just fit valve)

FVB-P90 Series

Custom order product

- NC (normally closed)
- Port size: Rc1/8, Rc1/4, Rc3/8

RoHS CAD

Structure and material restriction

	Structure		Material restriction		Model No.
P9 Series	Low particle generation	Oil-prohibited	Copper-based materials prohibited (wetted parts)	Stainless steel material used (wetted parts)	– P90

JIS symbol

- Normally closed

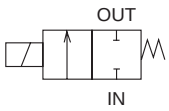

Common specifications

Descriptions	FVB
Working fluid	Air/inert gas/low vacuum (1.3×10^{-2} Pa (abs))
Proof pressure (water pressure) MPa	5 (3 for ø7 orifice)
Fluid temperature °C	-10 to 40 (no freezing)
Ambient temperature °C	-20 (4°F) to 40
Thermal class	Class 130 (B)
Atmosphere	Place free of corrosive gas and explosive gas
Valve structure	Direct acting poppet structure
Valve seat leakage $Pa \cdot m^3/sHe$	1.33×10^{-6} or less
Mounting orientation	Free

Model specifications

Descriptions / Model No.	Port size	Orifice size (mm)	Flow characteristics C [$dm^3/(s \cdot bar)$]	Flow characteristics b	Working pressure Pa (abs)	Max. operating pressure differential (*6) (MPa)	Rated voltage	Power consumption (W) AC	Power consumption (W) DC	Weight (kg)
NC (normally closed)										
FVB21-6-Z-L2CR-P90	Rc1/8	1	0.14	0.49	1.3×10^{-2} to 1×10^{6}	1	100 VAC 50/60 Hz 200 VAC 50/60 Hz 24 VDC 12 VDC	4.3	4	0.16
-2-L2CR-P90		2	0.55	0.56	1.3×10^{-2} to 0.3×10^{6}	0.3				
FVB31-$^{6}_{8}$-3-L2CR-P90	Rc1/8 Rc1/4	3	1.2	0.57	1.3×10^{-2} to 0.4×10^{6}	0.4		6.5	6	0.29
-5-L2CR-P90		4	2.2	0.50	1.3×10^{-2} to 0.15×10^{6}	0.15				
FVB41-$^{8}_{10}$-5-L2CR-P90	Rc1/4 Rc3/8	4	2.2	0.50	1.3×10^{-2} to 0.3×10^{6}	0.3		8.3	8 *3	0.50
-6-L2CR-P90		5	3.2	0.50	1.3×10^{-2} to 0.12×10^{6}	0.1				
FVB51-$^{6}_{10}$-5-L2CR-P90	Rc1/4 Rc3/8	4	2.2	0.50	1.3×10^{-2} to 0.5×10^{6}	0.5		11.8	11.5	0.69
-6-L2CR-P90		5	3.2	0.50	1.3×10^{-2} to 0.3×10^{6}	0.3				
-7-L2CR-P90		7	5.2	0.38	1.3×10^{-2} to 0.15×10^{6}	0.15				

*1: The voltage fluctuation range must be within ±10% of the rated voltage.
*2: The leakage current must be less than the values shown below.
*3: 8.6 (W) for 12 VDC.
*4: Effective cross-sectional area S and sonic conductance C are converted as S ≒ 5.0 × C.
*5: When using in vacuum, vacuum the OUT port side.
*6: The max. operating pressure differential is pressure difference between IN port (high-pressure side) and OUT port (low-pressure side).
*7: The working pressure vacuum does not guarantee the vacuum attainment time or that the vacuum will not change.
*8: Model number displays that for AC voltage.
For other voltages other than above, refer to coil options (exhibit).
Also, coil is all wave rectifier for AC voltage.

Leakage current: Voltage / Model No.	100 VAC	200 VAC	24 VDC	12 VDC
FVB	2 mA or less	1 mA or less	1 mA or less	2 mA or less

How to order

FVB 2 I - 6 - 2 - L 2CR B - P90 - 1

- FVB: Model No.
- 2: Ⓐ Size variation
- I: Actuation — Normally closed (NC)
- 6: Ⓑ Port size
- 2: Ⓒ Orifice
- L: Bodymaterial / Sealant material / Oil-prohibited
- 2CR: Ⓓ Coil option *1 — : Stainless steel / : Nitrile rubber
- B: Ⓔ Other options
- P90: For clean blow
- 1: Ⓕ Voltage *2

	Code	Content	FVB21	FVB31	FVB41	FVB51
Ⓐ Size variation	2	22 mm	●			
	3	28 mm		●		
	4	34 mm			●	
	5	40 mm				●
Ⓑ Port size	6	Rc1/8	●	●		
	8	Rc1/4		●	●	●
	10	Rc3/8			●	●
Ⓒ Orifice	Z	ø1	●			
	2	ø2	●			
	3	ø3		●		
	5	ø4		●	●	●
	6	ø5			●	●
	7	ø7				●
Ⓓ Coil option	For AC					
	2CR	Grommet lead wire with all wave rectifier	●	●	●	●
	For DC					
	2C	Grommet lead wire	●	●	●	●
Ⓔ	Blank	Standard None	●	●	●	●
	B	Option Mounting plate	●	●	●	●
Ⓕ Voltage	1	100 VAC 50/60 Hz	●	●	●	●
	2	200 VAC 50/60 Hz	●	●	●	●
	3	24 VDC	●	●	●	●
	4	12 VDC	●	●	●	●

- Select from the combinations indicated with ● above.
- Contact CKD for details for manifold.

[Example of model No.]

FVB21-6-Z-L2CRB-P90-1
Model: FVB

- Ⓐ Size variation : 22 mm
- Ⓑ Port size : Rc1/8
- Ⓒ Orifice : ø1
- Ⓓ Coil option : Grommet lead wire with all wave rectifier
- Ⓔ Other options : Mounting plate
- Ⓕ Voltage : 100 VAC 50/60 Hz

*1: Coils for 2CR have a diode to convert AC to DC power supply.
*2: For voltages other than above, contact CKD.

Dimensions

● Grommet lead wire with all wave rectifier
FVB*1-□-□-L2CR-P90

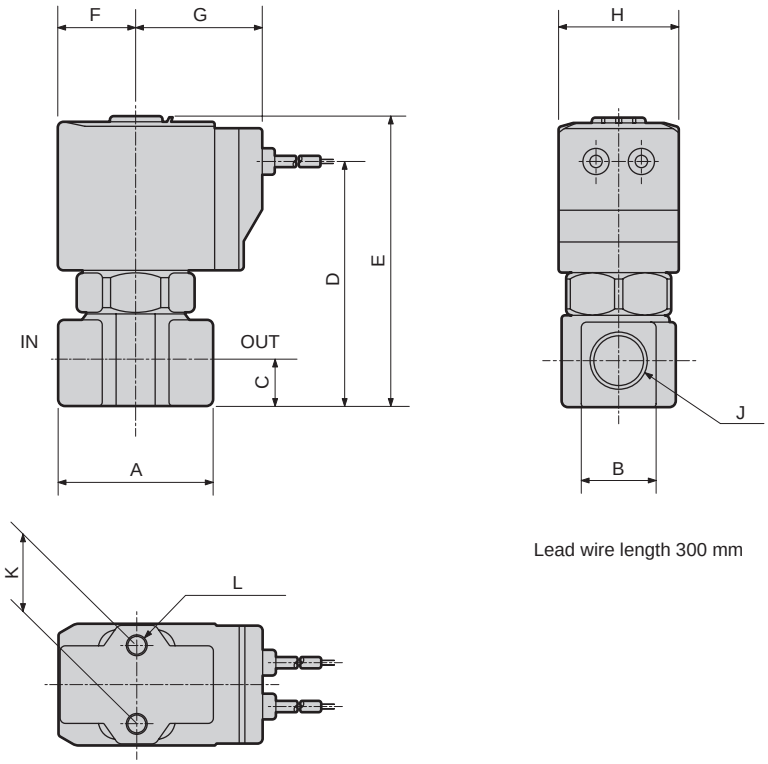

Lead wire length 300 mm

Model No.	A	B	C	D	E	F	G	H	J	K	L
FVB21-P90	32	14	8	45.5	56	15.5	26.5	22	Rc1/8	15	M4 depth 6
FVB31-P90	36	18	11	57.5	68.5	18.5	29.5	28	Rc1/8, Rc1/4	18	M5 depth 6
FVB41-P90	40	21	12	67	81	22.5	34	34	Rc1/4, Rc3/8	18	M5 depth 8
FVB51-P90	40	21	12	73.5	89	26	37.5	40	Rc1/4, Rc3/8	18	M5 depth 8

Option dimensions (refer to the dimensions of grommet lead wire with all wave rectifier for common dimensions.)

● Grommet lead wire
FVB*1-□-□-L2C-P90

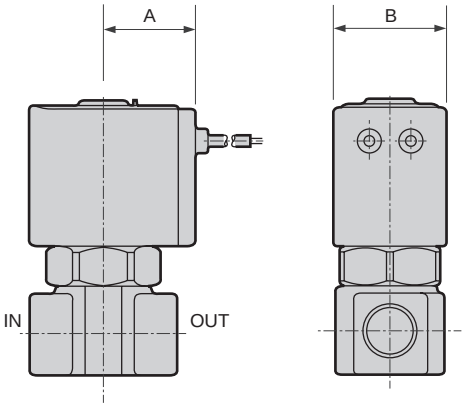

Model No.	A	B
FVB21-P90	19.5	22
FVB31-P90	22.5	28
FVB41-P90	26	34
FVB51-P90	29.5	40

● Mounting plate
FVB*1-□-□-L**B-P90

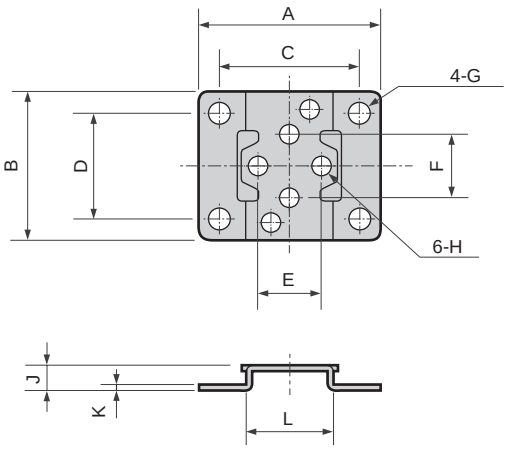

Model No.	A	B	C	D	E	F	G	H	J	K	L
FVB21-P90	40	34	30	25	15	15	ø5	ø4.5	6	1.2	20
FVB31-P90	52	42	40	30	18	18	ø6	ø5.5	7	1.6	25
FVB41-P90	56	48	44	36	18	18	ø6	ø5.5	7	1.6	30
FVB51-P90											

Pilot kick 2-port solenoid valve for clean blow
(general purpose valve)

ADK11-ZP90 Series

- NC (normally closed)
- Port size: Rc1/4 to Rc1
- Diaphragm structure

RoHS CAD

Structure and material restriction

	Structure		Material restriction		Model No.
P9 Series	Low particle generation	Oil-prohibited	Copper-based materials prohibited (wetted parts)	Stainless steel material used (wetted parts)	– P90

JIS symbol

- Normally closed

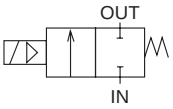

Common specifications

Descriptions	Standard specifications
Working fluid	Air/inert gas/low vacuum (1.33kPa (abs))
Operating pressure differential MPa	0 to 0.7 (Refer to max. operating pressure differential in specifications.)
Max. working pressure MPa	2
Proof pressure (water pressure) MPa	4
Fluid temperature °C	-10 to 40 (no freezing)
Ambient temperature °C	-10 to 40
Thermal class	Class 130 (B)
Atmosphere	Place free of corrosive gas and explosive gas
Valve structure	Pilot kick poppet, diaphragm structure
Valve seat leakage cm^3/min (ANR)	1 or less (8A/10A: at 0.02 to 0.7 MPa, 15A to 25A: at 0.02 to 0.6 MPa)*
Mounting orientation	Free

* When used at a pressure less than 0.02 MPa, the sealant may be unstable. Contact CKD in this case.

Individual specifications

Descriptions / Model No.	Port size	Orifice size (mm)	Min. operating pressure differential (MPa)	Max. operating pressure differential (MPa)	Rated voltage	Power consumption (W) AC	Power consumption (W) DC
ADK11-8A-LZP90**	Rc1/4	12	0	0.7	100 VAC 50/60 Hz 200 VAC 50/60 Hz 12 VDC 24 VDC 48 VDC 100 VDC	15.5	14
-10A-LZP90**	Rc3/8	12		0.7			
-15A-LZP90**	Rc1/2	16		0.6			
-20A-LZP90**	Rc3/4	23		0.6			
-25A-LZP90**	Rc1	28		0.6			

*1: The voltage fluctuation range must be within ±10% of the rated voltage.
*2: The leakage current must be less than the values shown below.

Leakage current: Voltage / Model No.	100 VAC	200 VAC	12 VDC	24 VDC	48 VDC	100 VDC
ADK11-8A to 25A-L**ZP90	10 mA or less	5 mA or less	40 mA or less	20 mA or less	10 mA or less	5 mA or less

Flow characteristics

Model No.	Port size	Orifice size (mm)	Flow characteristics C [dm^3/ (s/bar)]	b	S (mm^2)
ADK11-8A-L**ZP90	Rc1/4	12	9.2	0.36	–
ADK11-10A-L**ZP90	Rc3/8	12	11	0.46	–
ADK11-15A-L**ZP90	Rc1/2	16	20	0.31	–
ADK11-20A-L**ZP90	Rc3/4	23	–	–	162
ADK11-25A-L**ZP90	Rc1	28	–	–	231

*1: Effective cross-sectional area S and sonic conductance C are converted as S ≒ 5.0 × C.

How to order

ADK11 - 15 A - L 3A B Z P90 - DC24V

- ADK11: Model No.
- 15: Ⓐ Port size
- A: Thread (Rc thread)
- L: Bodymaterial : Stainless steel; Sealant material: Nitrile rubber; Oil-prohibited
- 3A: Ⓑ Coil housing
- B: Ⓒ Mounting plate
- Z: Low dust specifications
- P90: For clean blow
- DC24V: Ⓓ Voltage

Ⓐ Port size	Code	Content
	8	1/4
	10	3/8
	15	1/2
	20	3/4
	25	1

[Example of model No.]

ADK11-15A-L3ABZP90-DC24V

Model: ADK11

- Ⓐ Port size: Rc1/2
- Ⓑ Coil housing
  : Open frame lead wire for DC voltage
- Ⓒ Mounting plate: With mounting plate
- Ⓓ Voltage: 24 VDC

Ⓑ Coil housing *1, *2		Ⓒ Mounting plate		Ⓓ Rated voltage *3, *4
3A	Open frame	Blank	Without mounting plate	12 VDC, 24 VDC 48 VDC, 100 VDC
		B	Mounting plate	
5A	Open frame (diode integrated)	Blank	Without mounting plate	100 VAC 200 VAC
		B	Mounting plate	

Notes for Ⓑ

*1: Coils for 5A have a diode to convert AC to DC power supply. Voltage of less than 100 VAC is not available.

*2: Surge suppressor is incorporated as standard in the coil with diode (5A).

Notes for Ⓓ

*3: 100 VAC coil is compatible with 100 VAC 50/60 Hz, and 200 VAC coil is compatible with 200 VAC 50/60 Hz.

*4: For voltages other than above, contact CKD.

Dimensions

● Open frame lead wire
ADK11-*-L 3A/5A ZP90

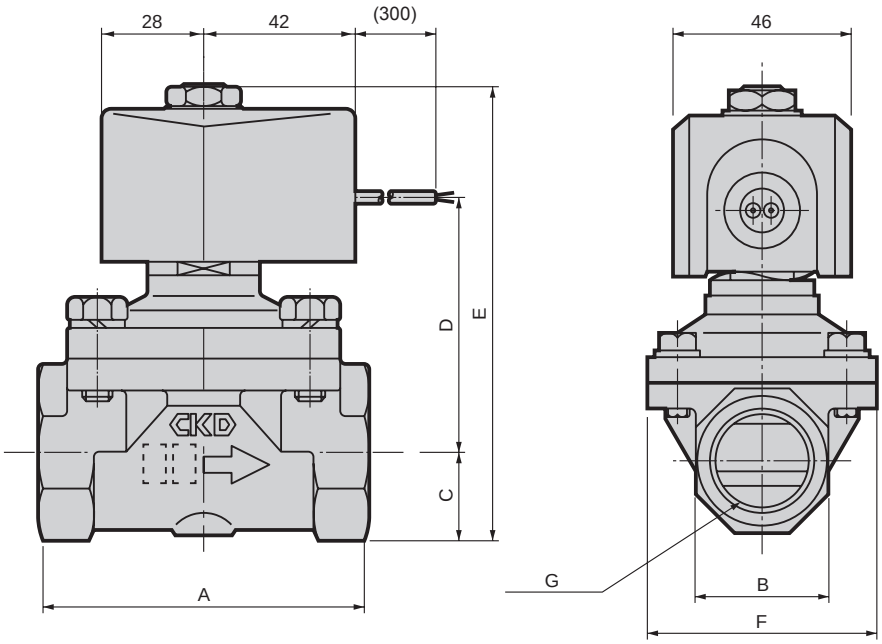

Model No.	A	B	C	D	E	F	G
ADK11-8A-L*ZP90	50	23	11.5	52	92.5	46	Rc1/4
ADK11-10A-L*ZP90	50	23	11.5	52	92.5	46	Rc3/8
ADK11-15A-L*ZP90	71	29	14.5	57	100.5	50	Rc1/2
ADK11-20A-L*ZP90	80	35	17.5	60.5	107	60	Rc3/4
ADK11-25A-L*ZP90	90	45	22.5	66	117.5	71	Rc1

● Mounting plate
ADK11-*-L*BZP90

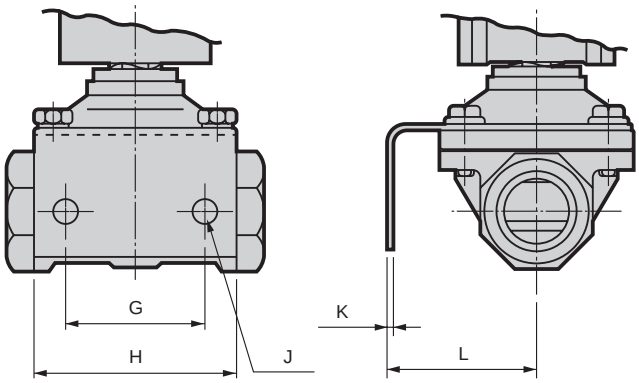

Model No.	G	H	J	K	L
ADK11-8A-L*BZP90	30	50	ø7	2	33.5
ADK11-10A-L*BZP90	30	50	ø7	2	33.5
ADK11-15A-L*BZP90	40	56	ø9	3.2	45
ADK11-20A-L*BZP90	45	63	ø9	3.2	50
ADK11-25A-L*BZP90	50	75	ø11	3.2	56

To assure safety

Fluid control components : WARNING/CAUTION

Always read this section before use.

Precautions for each model series

Direct acting 2-port solenoid valve for clean blow (FVB)

Design & selection

WARNING

■ Installing final filter

Install final filter (ex: FCS500) on secondary face of solenoid valve, as this solenoid valve is low particle generation specifications.

CAUTION

■ Leakage current from other fluid control components

In case actuate solenoid valves with programmable controller, confirm that the leakage current from the programmable controller's output is within each model's specifications.

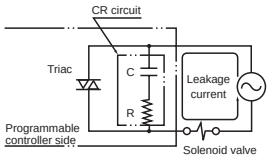

Maintenance

CAUTION

■ Assembling & disassembling

When disassembling or assembling, tighten the core assembly and socket with the following tightening torques.

Model No.	Core assembly set screw
FVB2	12 to 18 Nm
FVB3	16 to 24 Nm
FVB4	21 to 31 Nm
FVB5	21 to 31 Nm

Precautions for each model series

Pilot kick 2-port solenoid valve for clean blow (ADK-Z)

Design & selection

⚠ WARNING

■ Working fluid

(1) The quality of dry air used for clean blow should have an atmospheric dew point of −60°C and over, oil removal rate of 0.01 mg/m³ or less.
(2) This valve cannot be used for maintaining the vacuum.

■ Installing final filter

Install final filter (ex: FCS500) on secondary face of solenoid valve, as this solenoid valve is low particle generation specifications.

⚠ CAUTION

■ Leakage current from other fluid control components

In case actuate solenoid valves with programmable controller, confirm that the leakage current from the programmable controller's output is within each model's specifications.

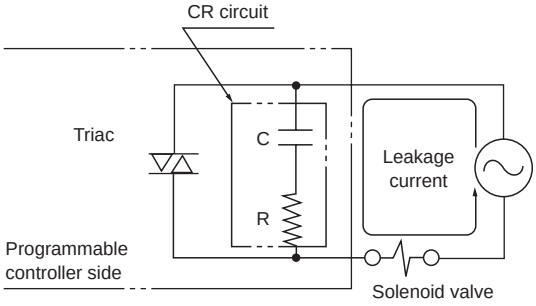

Installation, piping & wiring

⚠ CAUTION

■ Installation

(1) As a general rule, the mounting orientation is upright, where the coil comes to the top side.

■ Piping

(1) If the pipe vibrates when the solenoid valve is opened and closed, securely fix the piping.
(2) When the regulator and solenoid valve are directly coupled, the parts could mutually vibrate causing resonance and chattering.
(3) If the piping sectional area on the fluid inlet is reduced, the operation may become unstable due to a differential pressure fault during valve operation. For the fluid inlet, use piping of a piping size that matches the port size of the valve. Do not use a needle valve.

When using

⚠ CAUTION

■ Instantaneous leakage

With the pilot kick 2-port valve, if sudden pressure is applied when the valve is closed, the valve may open for an instant causing fluid to leak. Caution is required during use.

Related products

Listed page

Fine System Components

Wet Fine components — Ending 2

Dry Fine system — Ending 3

Drive/pneumatic/control Component

Pneumatic cylinders — Ending 4

Electric Motion Components (ABSODEX, electric actuator) — Ending 5

Dryer — Ending 17

Gas generator — Ending 22

Flow rate sensor — Ending 23

Control Valve — Ending 26

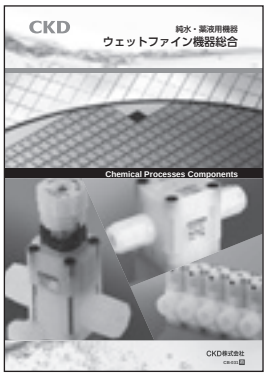

Catalog No.CB-031A

Responding to high-level needs for semiconductor manufacturing process control

Wet Fine components

- Port size: 1/8"to 1", various integrated fittings
- Working fluid: Pure water, chemical liquid, N2 gas, air

- Designed based on our industry-leading advanced production and Engineering performance
- A wide range of products and fittings
- Clean production system throughout the company

● Air operated valve for chemical liquids

AMD3R**

●Air operated valve for chemical liquids (manifold)

GAMD3R**

●Air operated valve for chemical liquids (metal-free)

AMD*1M

●Air operated valve for chemical liquids (for liquid supply)

AMD*1H

● Manual valve for chemical liquids

MMD*03RN

● Air operated valve for chemical liquids

Drip prevention valve integrated

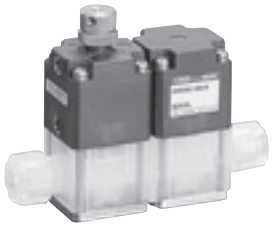

AMDS

● Pilot regulator

PMP

● Manual regulator

PYM/PMM

● Manual flow rate adjusting valve

FMD

● Motorized flow rate adjusting valve

MNV

● Manual fine flow rate adjusting valve

LYX

● Fine level switch

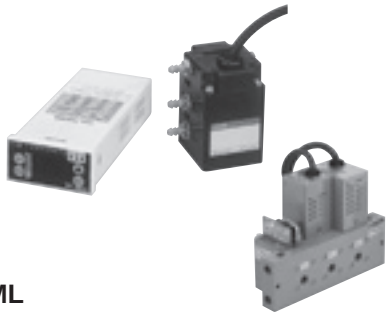

KML

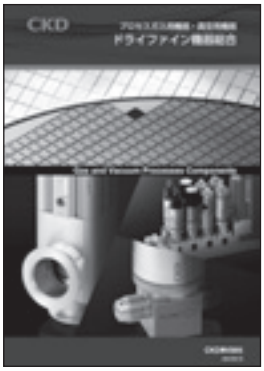

Catalog No.CB-035A

Process gas/vacuum components

Dry Fine system

- Working fluid and port size: For process gas: 1/4" / 3/8"JXR fittings and others
  For vacuum: NW16 to 160 and various others

- Clean environment production from designing to packaging
- Various models are available for process gas and vacuum

Components for process gases

●Air operated valve for process gas

AGD

●Air operated valve for process gas

AGD(High temperature/high durability)

●Manual valve for process gas

OGD

●Manual valve for process gas

MGD

●Manual valve for process gas

LGD

●Regulator for process gas

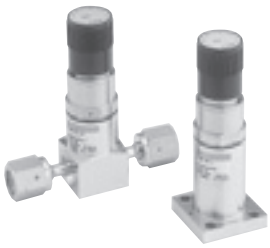

PGM

● Integrated gas supply system

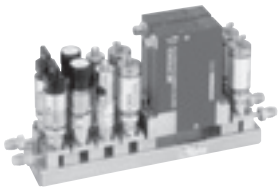

IAGD5

● Clean panel

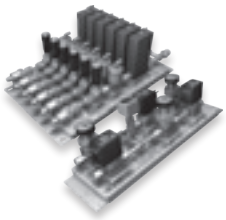

FICS

Valve for high vacuum

● Air operated valve

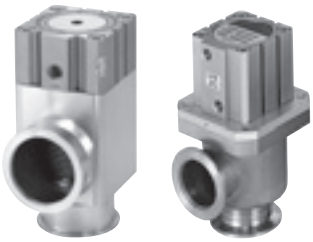

AVB

● Manual valve

MVB

System components

● Vacuum pressure control system

IAVB

● Vacuum pressure control system

VEC-R

Drive components
(Pneumatic cylinders)

(Catalog No.CB-030SA)

Rotary clamp cylinder/single guide
Double acting/single rod
RCS2 Series

Specifications

Item		RCS2							
Bore size	mm	ø12	ø16	ø20	ø25	ø32	ø40	ø50	ø63
Actuation		Double acting							
Working fluid		Compressed air							
Max. working pressure	MPa	1.0							0.6
Min. working pressure	MPa	0.1 (*2)							
Proof pressure	MPa	1.6							
Ambient temperature	°C	-10 to 60 (no freezing)							
Port size	Rc, NPT, G	M5				1/8		1/4	
Stroke tolerance	mm	+1.0 0		+1.2 0					
Working piston speed	mm/s	50 to 200							
Cushion		Rod side: rubber cushioned, Head side: no cushioning							
Lubrication		Not required (use turbine oil class 1 ISO VG32 if lubrication is necessary)							
Turning ratio		90° ±10°							
Rotation direction		Right/Left							
Non-rotating accuracy (clamping, default value)		±1.4°	±1.2°			±0.9°		±0.7°	
Pressurized area mm^2	Pull side	84	150	201	377	603	1056	1649	2803
	Push type	113	201	314	490	804	1256	1963	3117

*1: Contact CKD for clean-room specifications.
*2: With constant pressurization

Stroke

Bore size (mm)	Stroke (mm)	Rotary stroke length*1 (mm)	Clamp stroke length*2 (mm)
ø12,ø16	17.5, 27.5, 37.5	7.5	10, 20, 30
ø20,ø25	19.5, 29.5, 39.5	9.5	10, 20, 30
ø32,ø40	25, 35, 45, 65	15	10, 20, 30, 50
ø50,ø63	29, 39, 49, 69	19	10, 20, 30, 50

Note1: The rotary stroke length is the size at which the cylinder moves directly in the clamp direction while rotating from the unclamp end.
Note2: The clamp stroke length is the dimensions that move directly in the clamp direction after rotation.

Rotation angle/rotation direction/non-rotating accuracy

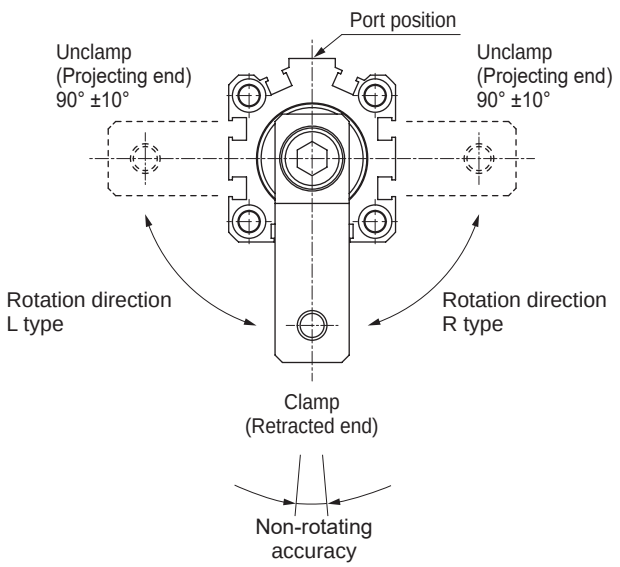

Electric component
(ABSODEX)

(Catalog No.CBA-054A)

ABSODEX
AX1000T/AX4000T Series

- **Clean room compatible**
  Various clean-room specifications are available.
- **Energy saving**
  Power consumption is only indexing and consumes little power while the output shaft is stopped.
- **Compliant with international standards (UL/cUL, CE)**
- **Contributes to safety standards (Safe Torque Off function)**
- **Smooth cam curve drive**
  Four cam curves: modified sine, modified trapezoid, modified constant velocity, and trapecloid.
  Smooth movement/stop to suit the application is achieved.
- **Excellent operability**
  Indexing time can be set directly in 0.01 seconds.
  The "interactive terminal" allows easy program creation in an interactive manner.

Dust-proof structure

Actuator rotation section
The fraction is sealed.
Dust-proof structure is excellent.

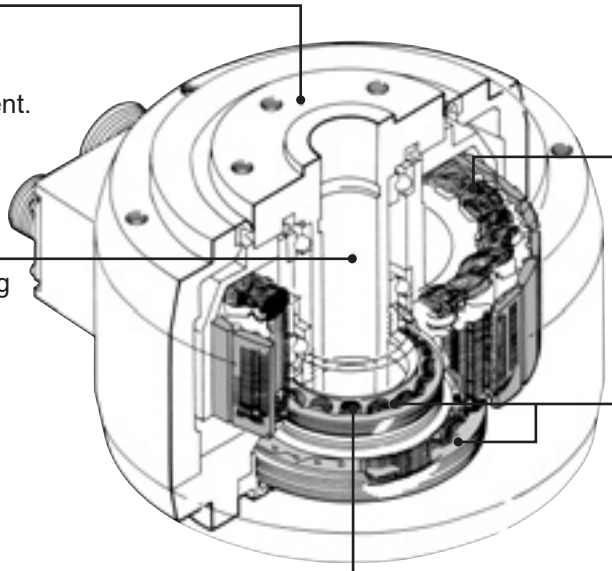

Easy mounting and centering

A for mounting on the rotating part and fixed part
with spigot and screw holes
. Wiring with hollow shaft
can also be centralized.

Compact and high torque

Compact design and
Suitable for indexing
High torque.

No need for returning to origin

Current position even if not returning to origin
absolute that can recognize
A resolver is used.

High-precision positioning

of 540672 pulses per rotation
with high resolution of ±15"
High-precision indexing is possible.
(Repeatability: ±5")

Applications

- Transport of workpiece arms

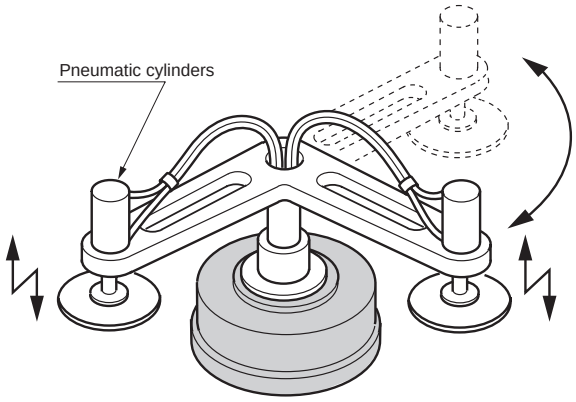

- Electronic index

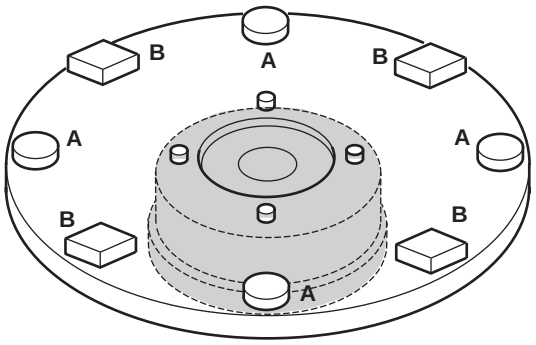

AX1000T Series

High accuracy specifications (index accuracy, output shaft runout, etc.)

Actuator specifications

Item	AX1022T	AX1045T	AX1075T	AX1150T	AX1210T
Max. output torque N/m	22	45	75	150	210
Continuous output torque N/m	7	15	25	50	70
Max. rotation speed rpm	240(*1)		140(*1)	120(*1)	
Allowable axial load N	600		2200		
Allowable moment load N/m	19	38	70	140	170
Output shaft moment of inertia kg/m^2	0.00505	0.00790	0.03660	0.05820	0.09280
Allowable moment of load inertia kg/m^2	0.6	0.9	4.0	6.0	10.0
Index accuracy sec	±15				
Repeatability sec	±5				
Output shaft friction torque N/m	2.0		8.0		
Resolver resolution P/rev	540672				
Weight kg	8.9	12.0	23.0	32.0	44.0
Output shaft runout mm	0.01				
Output shaft surface runout mm	0.01				

*1: Use at a speed of 80 rpm or less during continuous rotation operation.

Example of clean room special order specifications

(1) Low dust grease specifications: bearing/oil seal, V-ring

* Contact CKD for details and made to order specifications.

AX1000T body

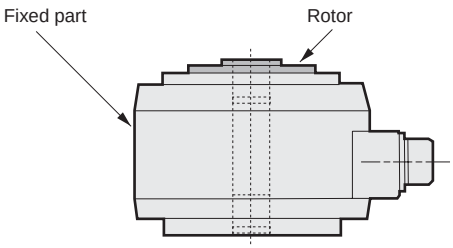

Clean data (particle data)

Measurement model: AX1075T (standard) *

experimental condition
Sample intake: 1cf^3/min
Min. measured particle diameter: 0.1 μm

Measuring method
From near the dust seal during the downflow
Air sampled.

● AX1075T standard *

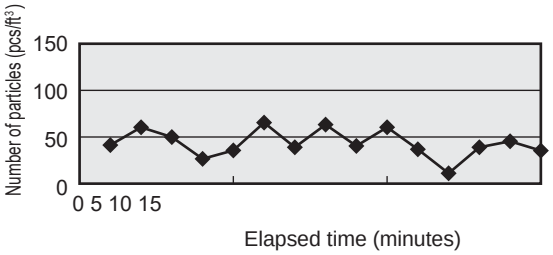

* The measurement was taken after over 8 hours of continuous operation.

AX4000T Series

Large hollow shaft is convenient for cable wiring and piping, abundant options available

Actuator specifications

Item	AX4009T	AX4022T	AX4045T	AX4075T	AX4150T	AX4300T	AX4500T	AX410WT
Max. output torque N/m	9	22	45	75	150	300	500	1000
Continuous output torque N/m	3	7	15	25	50	100	160	330
Max. rotation speed rpm	240(*1)			140(*1)	100(*1)		70	30
Allowable axial load N	800	3700		20000				
Allowable moment load N/m	40	60	80	200	300	400	500	400
Output shaft moment of inertiakg/m^2	0.009	0.0206	0.0268	0.1490	0.2120	0.3260	0.7210	2.72
Allowable moment of load inertiakg/m^2	0.35 (1.75) *2	0.60 (3.00) *2	0.90 (5.00) *2	5.00 (25.00) *2	75.00	180.00	300.00	600.00
Index accuracy (*1) sec	±30							
Repeatability sec	±5							
Output shaft friction torque N/m	0.8	3.5		10.0			15.0	20.0
Resolution P/rev	540672							
Weight kg	5.5	12.3	15.0	36.0	44.0	66.0	115.0	198
Output shaft runout mm	0.03							
Output shaft surface runout mm	0.05							0.03

*1: Use at a speed of 80 rpm or less during continuous rotation operation.
*2: When using in load conditions up to those given in ( ), set parameter 72 (integral gain magnification) = 0.3 (guide box).

Example of clean room special order specifications

(1) Low dust grease specifications: bearing/oil seal, V-ring

* Contact CKD for details and made to order specifications.

AX4000T body

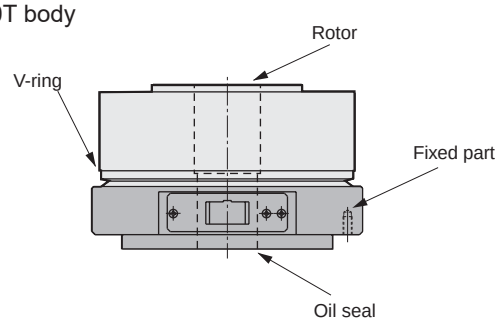

Clean data (particle data)

● AX4022T standard *

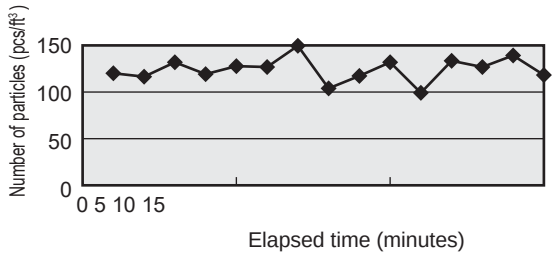

● AX4022T clean-room specifications *

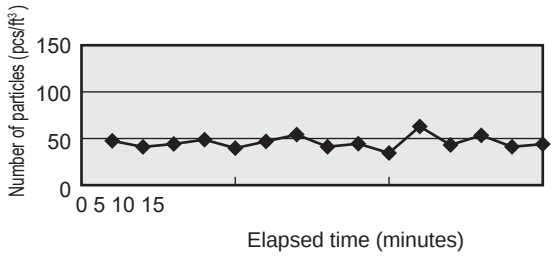

ABSODEX (for AX1000T/AX2000T/AX4000T Series)

TS/Htype driver

Interface specification: Parallel I/O (NPN), Parallel I/O (PNP)
CC-Link, PROFIBUS-DP, DeviceNet
EtherCAT, EtherNet/IP

Features

- Power supply is divided into main power supply and control power supply
- Wiring method is changed from terminal block to connector
- Small/lightweight (resin body adopted)
- 7-segment LED 2-digit display
- Compatible with encoder output (parallel I/O only)
- Serial communication options available
- Monitoring functions such as position information, alarm status, etc.
  (U2, U3, U4, U5, and U6 options only)

How to order

◦200 to 230 VAC

AX9000TS - U0

AX9000TH - U0

◦100 VAC to 115 VAC

AX9000TS-J1- U0

Interface specifications U0: Parallel I/O (NPN) U1: Parallel I/O (PNP) U2: CC-Link U3: PROFIBUS-DP U4: EtherCAT U6: EtherNet/IP

General specifications

Item		Model	
		TS type driver AX9000TS	TH driver AX9000TH
Power supply voltage	Main power supply	Three-phase, single-phase 200 VAC ±10% to 230 VAC ±10% (*1) 100 VAC ±10% to 115 VAC ±10% (J1 option) (*2) (*3)	
	Control power	200 VAC ±10% to 230 VAC ±10% 100 VAC ±10% to 115 VAC ±10% (J1 option) (*2) (*3)	
Power frequency		50/60 Hz	
Rated input current		200 VAC: 1.8A AC100V:2.4 A	200 VAC:5.0 A
Rated output current		1.9 A	5.0 A
Structure		Driver and controller integrated (open)	
Operating ambient temperature		0 to 50°C	
Operating ambient humidity		20 to 90% RH (no condensation)	
Storage ambient temperature		-20 to 65°C	
Storage ambient humidity		20 to 90% RH (no condensation)	
Atmosphere		No corrosive gas or dust	
Anti-noise		1000 V (P-P), pulse width 1 μsec, rising 1nsec impulse noise test, induction noise (capacitive coupling)	
Vibration resistance		4.9m/s^2	
Weight		Approx. 1.6kg	Approx. 2.1kg
Degree of protection		IP2X (excluding CN4, CN5)	

*1) For models with maximum torque 75 N·m or more, the calculation of torque limit region is different from the usual when used at single-phase 200 VAC.Contact CKD to determine usability.
*2) If the power supply voltage AC100V~115V specifications (-J1 option) is used, AC200V~230V is incorrectly connectedwill damage the driver's internal circuit.
*3) For models with maximum torque 75 N·m or more, "-J1" cannot be selected.
*4) Shut off the main power while the actuator is rotatingIn this case, the rotation may continue due to inertia.
*5) main electric powerAfter the source shut-off, the motor may rotate due to the residual voltage of the driver.

Performance specifications

Item	Description
No. of control axes	1 axis, 540,672 pulse/1 rotation
Angle setting unit	° (degree), pulse, indexing No.
Angle min. setting unit	0.001°, 1 pulse
Speed setting unit	sec, rpm
Speed setting range	0.01 to 100 sec/0.11 to 300 rpm (*1)
Equal divisions	1 to 255
Max. command value	7-digit numeric input ±9,999,999
Timer	0.01 sec to 99.99 sec
Programming language	NC
Programming method	Set data through the RS232C port with an interactive terminal, PC, etc.
Operation mode	Auto, MDI, jog, single block, servo OFF, pulse train input mode
Coordinates	Absolute, incremental
Acceleration curve	[5 types] Modified Sine (MS.), Modified Constant Velocity (MC/MC2), Modified Trapezoid (MT), Trapecloid (TR)
Status display	LED display CHARGE: Main power supply POWER: Control power
Operation display	Display with 7-segment LED (2 digits)
Communication interface	RS-232C compliant
I/O signal	Refer to interface specification pages.
Program capacity	Approx. 6000 characters (256)
Electronic thermal	Overheating protection for actuator

*1) Maximum rotation speed differs depending on the actuator connected.

Breaker capacity

TS driver

Actuator model No.	Driver model No.	Rush current (A)		Breaker capacity
		Single-phase 100 V	Single-phase/three-phase 200 V	Rated current (A)
AX2006T	AX9000TS	16 (*1)	56 (*1)	10
AX1022T, AX2012T, AX2018T AX4009T, AX4022T				
AX1045T, AX4045T				
AX1075T, AX4075T		-		

*1) The value of the rush current is a representative value at 115 VAC and 230 VAC.

TH driver

Actuator model No.	Driver model No.	Rush current (A)	Breaker capacity
		Three-phase 200 V	Rated current (A)
AX1150T, AX4150T	AX9000TH	56 (*1)	20
AX1210T, AX4300T			
AX4500T			
AX410WT			

*1) The value of the rush current is a representative value at 230 VAC.

Parallel I/O (NPN)

CN3 input signal

Pin No.	Signal name	Logic	Judgment
1 to 2	External power supply input +24V ±10%		
3 to 4	External power supply input GND		
5	Program No. selection input (bit 0)	Correct	Level
6	Program No. selection input (bit 1)	Correct	Level
7	Program No. selection input (bit 2)	Correct	Level
8	Program No. selection input (bit 3)	Correct	Level
9	Program number setting input 2nd digit/ Program number selection input (bit 4)	Correct	Edge Level
10	Program number setting input 1st digit/ Program number selection input (bit 5)	Correct	Edge Level
11	Reset input	Correct	Edge
12	Origin position return command input	Correct	Edge
13	Startup input	Correct	Edge
14	Servo-on input/ Program stop input	Correct	Level Edge
15	Ready return/Continuous rotation stop input	Correct	Edge
16	Answer input/Position deviation counter reset input	Correct	Edge
17	Emergency stop input	Load	Level
18	Brake release input	Correct	Level

CN3 output signal

Pin No.	Signal name	Logic
33	M-code output (bit 0)	Correct
34	M-code output (bit 1)	Correct
35	M-code output (bit 2)	Correct
36	M-code output (bit 3)	Correct
37	M-code output (bit 4)	Correct
38	M-code output (bit 5)	Correct
39	M-code output (bit 6)	Correct
40	M-code output (bit 7)	Correct
41	In-position output	Correct
42	Output of positioning completion	Correct
43	Startup input standby output	Correct
44	Alarm output 1	Load
45	Alarm output 2	Load
46	Output 1 during indexing/Origin position output	Correct
47	Output 2 during indexing/Servo state output	Correct
48	Ready output	Correct
49	Split position strobe output	Correct
50	M-code strobe output	Correct

CN3 pulse train input signal

Pin No.	Signal name
19	PULSE/UP/A-phase
20	-PULSE/-UP/-A-phase
21	DIR/DOWN/B-phase
22	-DIR/-DOWN/-B-phase

CN3 encoder output signal(Incremental)

Pin No.	Signal name
23	A-phase (line driver output)
24	-A-phase (line driver output)
25	B-phase (line driver output)
26	-B-phase (line driver output)
27	Z-phase (line driver output)
28	-Z-phase (line driver output)

I/O circuit specifications

Description	1 circuit current (mA)	Max. number of points (Circuit)	Max. current (mA)	Max. current consumption (mA)
Input circuit	4	14	56	1106
Output circuit	50	18	900	
Brake output (BK+, BK-)	75	2	150	

*The maximum simultaneous output points of the output circuit are 18 points out of 14 points.

CN3 I/O circuit specifications

● Input circuit

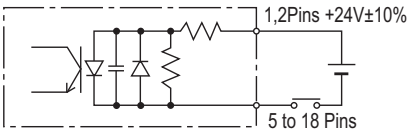

Rated voltage 24V±10%
Rated current4mA(@24 VDC)

● Pulse train input circuit

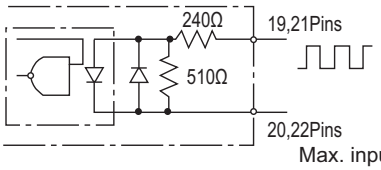

Rated voltage5V±10%
Max. input frequency
Line driver 1Mpps
Open collector 250Kpps

● Output circuit

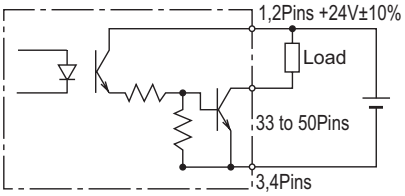

Rated voltage24V±10%

● Encoder output circuit

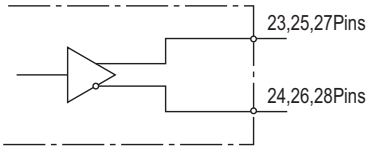

Output: Line driver
Used line driver: DS26C31

Related products

Ending

□ Custom-made products are CE, UL/cUL, and RoHS non-compliant.

ABSODEX peripheral devices

Interactive terminal

Features

(1) Programming is easy.
For an equal segment program, you can easily write a program by answering the questions interactively from the handy terminal.
(2) Dedicated power supply not required
The power is supplied from ABSODEX.
(3) Backup is possible
The programs and parameters can be stored, and programs can be copied.

How to order

Body model No. — Option model No.

AX0180 – E

Model No.

Code	Description
Blank	Standard (Japanese version)
E	English version

Operation mode

Edit mode	equal segment program (interactive), Create and edit an NC program.
Display mode	Current position, I/O state, Displays a reminder.
Parameter mode	Browse and set parameters.
Operation mode	Start, stop, adjust offset origin, etc. The controller operates with a single operation.
Copy mode	programs and parameters. Bulk copy to another driver.
Tuning mode	Perform auto-tuning.

ABSODEX PC communication software

AX Tools(free of charge)

Features

ABSODEX programs are created, parameters set, and operation commands, etc., issued from the PC.The created program can be saved.

AX6000M Series

Flat size of hand with a diameter of 80mm, ideal for equipment space saving

Actuator specifications

Item		AX6001M	AX6003M
Max. output torque	N/m	1.2	3.0
Continuous output torque	N/m	0.4	1.0
Max. rotation speed	rpm	240 (*1)	
Allowable axial load	N	600	
Allowable moment load	N/m	5	
Output shaft moment of inertia	kg/m^2	0.00034	0.00059
Allowable moment of load inertia	kg/m^2	0.034	0.059
Index accuracy (*2)	sec	±90	
Repeatability (*2)	sec	±10	
Output shaft friction torque	N/m	0.13	0.22
Resolution	P/rev	540672	
Motor insulation class		Class A	
Motor withstand voltage		550 VAC 1 minute	
Motor insulation resistance		10 MΩ and over, 500 VDC	
Operating ambient temperature		0~40°C	
Operating ambient humidity		20 to 85% RH, no condensation	
Storage ambient temperature		-10~65°C	
Storage ambient humidity		20 to 90% RH, no condensation	
Atmosphere		No corrosive gas, explosive gas, or dust	
Weight	kg	1.2	1.8
Output shaft runout (*2)	mm	0.03	
Output shaft surface runout (*2)	mm	0.05	
Degree of protection		IP20	

*1: Use at a speed of 80 rpm or less during continuous rotation operation.

ABSODEX

MUtype driver

Interface specifications: Parallel I/O (NPN)
Parallel I/O (PNP)

Features

- Ultra-compact/lighter weight (resin body adopted)
- Easy wiring with connector

How to order

AX9000MU – U0
AX9000MU – U1

Interface specifications
U0: Parallel I/O (NPN)
U1: Parallel I/O (PNP)

General specifications

Item		Description
Product name		MU driver AX9000MU
Power supply voltage	Main power supply	24 VDC ±10%
	Control power	24 VDC ±10%
Structure		Driver and controller integrated
Operating ambient temperature		0~50°C
Operating ambient humidity		20 to 90% RH (no condensation)
Storage ambient temperature		-10~65°C
Storage ambient temperature		20 to 90% RH (no condensation)
Atmosphere		No corrosive gas or dust
Anti-noise		1000 V (P-P), pulse width 1 μsec, rising/falling time 1 nsec Impulse noise test, induction noise (capacitive coupling)
Vibration resistance		$4.9m/s^2$
Weight		Approx. 0.5kg
Degree of protection		IP2X

Performance specifications

Item	Description
No. of control axes	1 axis, 540,672 pulse/1 rotation
Angle setting unit	° (degree), pulse, indexing No.
Angle min. setting unit	0.001°, 1 pulse
Speed setting unit	sec, rpm
Speed setting range	0.01 to 100 sec. / 0.11 to 240 rpm
Equal divisions	1 to 255
Max. command value	7-digit numeric input ±9,999,999 pulse
Timer	0.01 sec to 99.99 sec
Programming language	NC
Programming method	Set data through RS-232C port with a PC.
Operation mode	Auto, jog, single block, servo OFF, pulse train input mode
Acceleration curve	[5 Types] Modified Sine (MS), Modified Constant Velocity (MC/MC2) Modified Trapezoid (MT), Trapecloid (TR)
Status display	RUN: Normal operating state
	ALM2: Alarm 2 state
	ALM1: Alarm 1 state
	SERVO: Servo state
	CHARGE: Charge state
Communication interface	RS-232C compliant
I/O signal	Refer to interface specification page.
Program capacity	Approx. 6000 characters (256)
Electronic thermal	Overheating protection for actuator

Power capacity

Actuator model No.	Driver model No.	Rated input current	Max. input current
AX6001M, AX6003M	AX9000MU	3.3 A	10 A

Ending

Custom-made products are CE and RoHS non-compliant.Contact CKD as needed.

Parallel I/O (NPN)

CN3 input signal

Pin No.	Signal name	Logic	Judgment
1 to 2	External power supply input +24V ±10%		
3 to 4	External power supply input GND		
5	Program No. selection input (bit 0)	Correct	Level
6	Program No. selection input (bit 1)	Correct	Level
7	Program No. selection input (bit 2)	Correct	Level
8	Program No. selection input (bit 3)	Correct	Level
9	Program number setting input 2nd digit/ Program number selection input (bit 4)	Correct	Edge Level
10	Program number setting input 1st digit/ Program number selection input (bit 5)	Correct	Edge Level
11	Reset input	Correct	Edge
12	Origin position return command input	Correct	Edge
13	Startup input	Correct	Edge
14	Servo-on input/ Program stop input	Correct	Level Edge
15	Continuous rotation stop input	Correct	Edge
16	Answer input/Position deviation counter reset input	Correct	Edge
17	Emergency stop input	Load	Level
18	Brake release input	Correct	Level

CN3 output signal

Pin No.	Signal name	Logic
33	M-code output (bit 0)	Correct
34	M-code output (bit 1)	Correct
35	M-code output (bit 2)	Correct
36	M-code output (bit 3)	Correct
37	M-code output (bit 4)	Correct
38	M-code output (bit 5)	Correct
39	M-code output (bit 6)	Correct
40	M-code output (bit 7)	Correct
41	In-position output	Correct
42	Output of positioning completion	Correct
43	Startup input standby output	Correct
44	Alarm output 1	Load
45	Alarm output 2	Load
46	Output 1 during indexing/Origin position output	Correct
47	Output 2 during indexing/Servo state output	Correct
48	Ready output	Correct
49	Split position strobe output	Correct
50	M-code strobe output	Correct

CN3 pulse train input signal

Pin No.	Signal name
19	PULSE/UP/A-phase
20	-PULSE/-UP/-A-phase
21	DIR/DOWN/B-phase
22	-DIR/-DOWN/-B-phase

CN3 encoder output signal(Incremental)

Pin No.	Signal name
23	A-phase (line driver output)
24	-A-phase (line driver output)
25	B-phase (line driver output)
26	-B-phase (line driver output)
27	Z-phase (line driver output)
28	-Z-phase (line driver output)

I/O circuit specifications

Description	1 circuit current (mA)	Max. number of points (Circuit)	Max. current (mA)	Max. current consumption (mA)
Input circuit	4	14	56	746
Output circuit	30	18	540	
Brake output (BK+, BK-)	75	2	150	

*The maximum simultaneous output points of the output circuit are 18 points out of 14 points.

CN3 I/O circuit specifications

● Input circuit

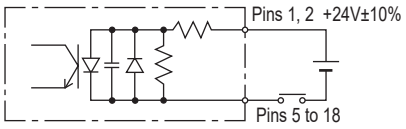

Rated voltage: 24 V ±10%
Rated current: 4 mA (at 24 VDC)

● Pulse train input circuit

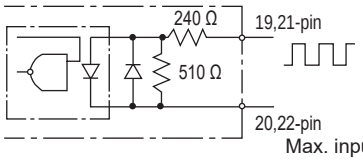

Rated voltage: 5 V ±10%

Max. input frequency
Line driver: 1 Mpps
Open collector: 250 Kpps

● Output circuit

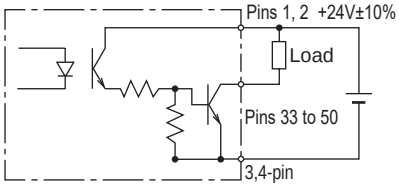

Rated voltage: 24 V ±10%
Rated current: 30 mA (max.)

● Encoder output circuit

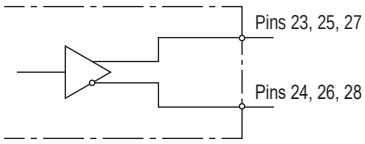

Output format: Line driver
Line driver used: DS26C31
Recommended line driver: DS26C32 or equivalent

Custom-made products are CE and RoHS non-compliant.

Electric component
(Electric actuator)

(Catalog No.CB-055A)

Electric actuator Low dust generation
ECS Series
Servo motor **Stepper motor**

Motorless specification for use with a familiar motor

Specifications

Item		Model													
		ECS-05			ECS-06			ECS-10				ECS-12			
Application Motor Size	Servo	100 W			100 W			100 W				100 W			
	stepping	□42			□42			□56, □60				□56, □60			
Ball screw size mm		12			12			16				16			
Ball screw accuracy grade		C7													
Screw lead mm		2	5	10	2	5	10	5	10	16	20	5	10	16	20
Repeatability mm		±0.01													
Max. load capacity *1	Horizontal kg	10	10	5	30	30	15	50	30	22	18	50	30	22	18
	Vertical kg	7	3	1.5	15	10	5	12	8	5	3	12	8	5	3
Max. speed *1 mm/s		100	250	500	100	250	500	250	500	800	1000	250	500	800	1000
Stroke length *2 mm		100 to 800			100 to 800			100 to 1050				100 to 1050			
Thrust N		825	330	165	854	341	170	341	170	106	85	341	170	106	85

*1: Value when acceleration / deceleration time is 0.2 sec.
*2: The stroke has a pitch of 50.

Item		Model											
		ECS-14								ECS-17			
Applicable motor sizes	Servo	200 W				400 W				400 W			
	stepping	-				□56, □60				-			
Ball screw size mm		16				16				20			
Ball screw accuracy grade		C7											
Screw lead mm		5	10	16	20	5	10	16	20	5	10	20	40
Repeatability mm		±0.01				±0.01							
Max.workload *1	Horizontal kg	95	75	44	35	110	88	48	40	120	110	75	35
	Vertical kg	27	18	7	6	33	22	10	8	40	30	14	5
Max. speed*1 mm/s		250	500	800	1000	250	500	800	1000	250	500	1000	2000
Stroke*2 mm		100 to 1050				100 to 1050				100 to 1250			
Thrust N		683	341	213	174	1388	694	433	347	1388	694	347	174

*1: Value when acceleration / deceleration time is 0.2 sec.
*2: The stroke has a pitch of 50.

Item		Model							
		ECS-17				ECS-22			
Applicable motor sizes	Servo	750 W				750 W			
	stepping	-				-			
Ball screw size mm		20				25			20
Ball screw accuracy grade		C7							
Screw lead mm		5	10	20	40	5	10	25	40
Repeatability mm		±0.01							
Max.workload *1	Horizontal kg	120	120	83	50	150	150	120	60
	Vertical kg	50	40	25	10	55	45	20	10
Max. speed*1 mm/s		250	500	1000	2000	250	500	1250	2000
Stroke length *2 mm		100 to 1250				100 to 1500			
Thrust N		2100	1050	525	260	2100	1050	420	260

*1: Value when acceleration / deceleration time is 0.2 sec.
*2: The stroke has a pitch of 50.

CAUTION:
This product does not have a motor mounted.The user must prepare, mount, and adjust the motor and driver.

The maximum speed is based on the assumption that the motor mounted will have 3000 rpm output.
Thrust and maximum load capacity are at speeds assuming that the motor mounted will output the rated torque.

Electric component
(Electric actuator)

(Catalog No.CB-055A)

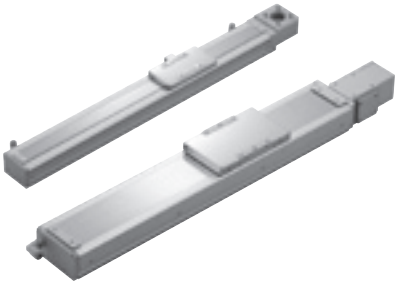

Electric actuator Belt drive Low dust generation
ECV Series
Servo motor

Motorless specification for use with a familiar motor

Specifications

Item		Model		
		ECV-05	ECV-06	ECV-10
Applicable motor sizes	Servo	100 W	100 W	100 W
Belt width	mm	9	12	15
Lead	mm	40	40	32
Repeatability	mm	±0.08		±0.04
Max.workload *1	Horizontal kg	3	3	10
	Vertical kg	-	-	-
Max. speed*1	mm/s	2000	2000	1600
Stroke*2	mm	100 to 800	100 to 800	100 to 2550
Thrust	N	42	42	61

*1: The value when acceleration/deceleration time is 0.4 sec.
*2: The stroke has a pitch of 50.

Item		Model	
		ECV-14	ECV-17
Applicable motor sizes	Servo	200 W	400 W
Belt width	mm	22	30
Lead	mm	40	40
Repeatability	mm	±0.04	±0.04
Max.workload *1	Horizontal kg	25	45
	Vertical kg	-	-
Max. speed*1	mm/s	2000	2000
Stroke*2	mm	100 to 3050	100 to 3500
Thrust	N	100	204

*1: The value when acceleration/deceleration time is 0.4 sec.
*2: The stroke has a pitch of 50.

Item		Model
		ECV-22
Applicable motor sizes	Servo	750 W
Belt width	mm	50
Lead	mm	40
Repeatability	mm	±0.04
Max.workload *1	Horizontal kg	85
	Vertical kg	-
Max. speed*1	mm/s	2000
Stroke*2	mm	100 to 3400
Thrust	N	367

*1: The value when acceleration/deceleration time is 0.4 sec.
*2: The stroke has a pitch of 50.

CAUTION:
This product does not have a motor mounted.
The user must prepare, mount, and adjust the motor and driver.

The maximum speed is based on the assumption that the motor mounted will have 3000 rpm output.
Thrust and maximum load capacity are values assuming that the motor mounted will output the rated torque.

Dust generation characteristics Reference data

Test circuit

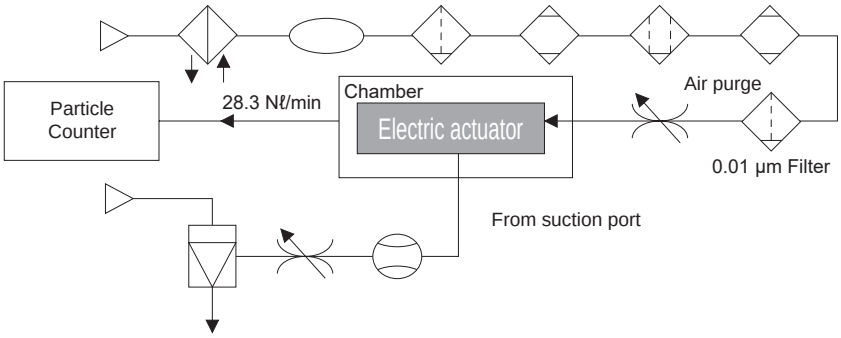

Measuring method

(1) Set a test sample in the acrylic resin chamber.

(2) Particle counter intake rate (28.3) NℓSupply clean air at the same quantity as /min.

(3) Place the chamber in an ISO class 4 (class 10) clean bench.

(4) Activate the test sample and measure changes in particle concentration over time during the specified measurement time.

(5) Operation speed of the test sample

Dust generation data

● ECS Series

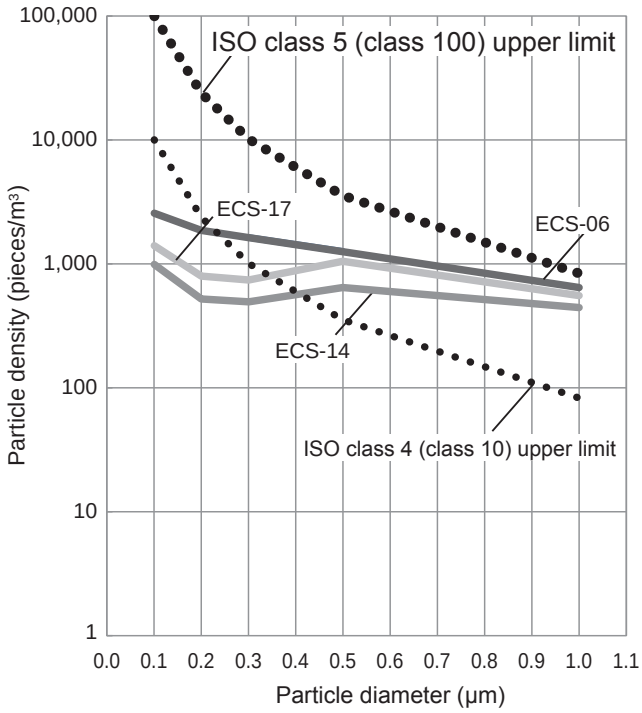

● ECV Series

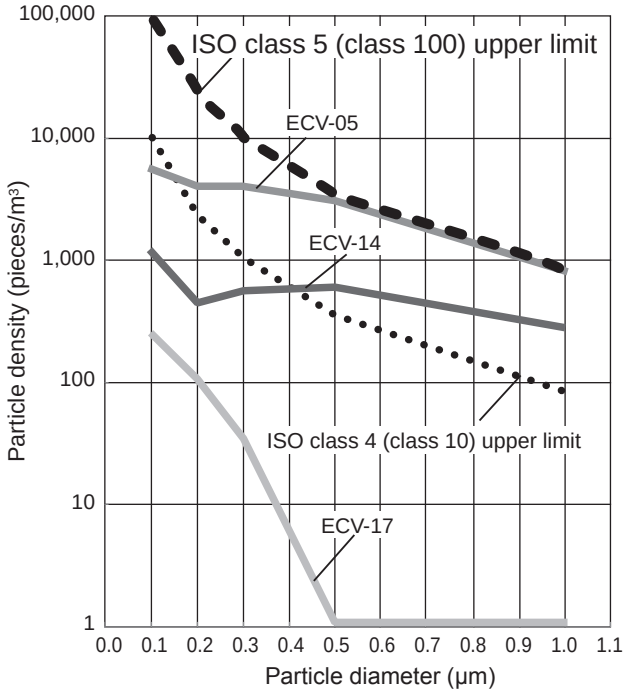

Dryer

Refrigerated air dryer Xeroaqua
GX3200D Series

Standard inlet air

● Compatible air compressors: for 2.2, 3.7, 5.5, 7.5, 11, 15, 22, 37, 55kW

(Catalog No. CB-024SA)

Specifications

Model No.		GX3203D	GX3206D	GX3208D	GX3211D	GX3215D	GX3222D	GX3237D	GX3255D
Applicable air compressor kW		Up to 2.2	3.7, 5.5	7.5	11	15	22	37	55
Working range	Working fluid	Compressed air							
	Inlet air temperature °C	5 to 50							
	Inlet air pressure MPa	0.15 to 1.0	0.1 to 1.0						
	Ambient temperature °C	2 to 45 (*1)				2 to 45			
Rating	Processing air rate m^3/min (ANR) 50/60 Hz (*2)	0.30/0.35	0.64/0.72	0.94/1.13	1.65/1.82	2.40/2.80	3.70/4.20	5.70/6.10	8.40/9.80
	Processing air rate(Compressor intake condition) m^3/min 50/60Hz (*3)	0.31/0.37	0.67/0.76	0.99/1.19	1.73/1.91	2.52/2.94	3.88/4.41	5.98/6.40	8.81/10.3
	Inlet air temperature °C	35							40
	Inlet air pressure MPa	0.7							
	Ambient temperature °C	32							
Performance	Outlet air pressure dew point °C (*4)	10							
	Pressure drop MPa 50/60Hz (*5)	0.002/0.003	0.009/0.011	0.009/0.013	0.011/0.013	0.012/0.017	0.024/0.031	0.023/0.026	0.018/0.025
Power		Single-phase 100/100, 110 VAC 50/60 Hz Single-phase 200, 220/200, 220 VAC 50/60 Hz				Three-phase 200/200, 220 VAC 50/60 Hz			
Electrical specifications (*6)	Power consumption (at 100, 110 V) kW 50/60Hz	0.17/0.19,0.20, 0.20	0.26/0.27,0.30	0.32/0.34,0.41	0.52/0.52,0.55	-	-	-	-
	Power consumption (at 200, 220 V) kW 50/60Hz	0.16, 0.17/0.19, 0.21	0.24, 0.28/0.26, 0.29	0.29, 0.35/0.32, 0.34	0.44, 0.49/0.52, 0.53	0.61/0.71,0.73	0.65/0.79,0.79	1.16/1.41,1.41	1.30/1.63,1.60
	Current consumption (at 100, 110 V) A50/60Hz	1.9/1.9, 1.8	3.2/2.8, 2.8	3.9/3.4, 3.7	6.5/5.2, 5.0	-	-	-	-
	Current consumption (at 200, 220 V) A50/60Hz	0.8, 0.8/1.0, 1.0	1.4, 1.6/1.3, 1.3	1.7, 2.1/1.6, 1.6	2.6, 2.9/2.6, 2.4	2.6/2.5, 2.5	3.0/2.8, 2.9	4.5/4.6, 4.4	5.3/5.7, 5.4
	Starting current (at 100 V) A 50/60Hz	7.1/7.9	11.1/12.1	16.4/17.3	26.5/24.8	-	-	-	-
	Starting current (at 200 V) A 50/60Hz	3.0/3.3	6.3/6.2	7.7/7.3	13.2/12.4	22.5/25.0	27.5/31.5	31.5/40.6	41.3/43.8
Refrigerant		R-134a			R-410A				
Air inlet and outlet port size		R 1/2	R 1/2	R 3/4	R 3/4	R1	R1	R 1 1/2	R 2
Product weight kg		18	21	26	33	39	42	68	84
Released heat kW 50/60Hz(*7)		0.29/0.32	0.57/0.65	0.72/0.81	1.2/1.3	1.6/1.8	2.3/2.5	3.0/3.3	4.8/5.6

*1:When the power supply voltage is ±5%.±10% to 2°C for power supply voltage 40.
*2:ANR shows conditions of 20°C atmospheric pressure and relative humidity 65%.
*3:This is a value converted to the intake condition of the air compressor in an environment of 32°C with a relative humidity of 75%.
*4:Contact CKD for information on the dew point performance guarantee.
*5:The pressure drop value is a typical value and is not a guaranteed value.
*6:The power consumption, current consumption and released heat are all reference values under the rated conditions and are not guaranteed values.

(Catalog No. CB-024SA)

Refrigerated air dryer Xeroaqua
GX5200D Series

High-temperature inlet air

● Compatible air compressors: for 2.2, 3.7, 5.5, 7.5, 11, 15, 22, 37, 55, 75kW

Specifications

Model No.		GX5203D	GX5204D	GX5206D	GX5208D	GX5211D	GX5215D	GX5222D	GX5237D	GX5255	GX5275
Applicable air compressor kW		Up to 2.2	3.7	5.5	7.5	11	15	22	37	55	75
Working range	Working fluid	Compressed air									
	Inlet air temperature °C	5 to 80									
	Inlet air pressure MPa	0.15 to 1.0	0.1 to 1.0								
	Ambient temperature °C	2 to 45 (*1)				2 to 45				2 to 40	
Rating	Processing air rate m^3/min (ANR) 50/60 Hz (*2)	0.30/0.35	0.44/0.50	0.64/0.72	1.22/1.32	1.65/1.82	2.10/2.40	3.70/4.20	5.70/6.10	7.80/9.20	10.4/12.3
	Processing air rate(Compressor intake condition) m^3/min 50/60Hz (*3)	0.31/0.37	0.46/0.52	0.67/0.76	1.28/1.38	1.73/1.91	2.20/2.52	3.88/4.41	5.98/6.40	8.18/9.65	10.9/12.9
	Inlet air temperature °C	55									
	Inlet air pressure MPa	0.7									
	Ambient temperature °C	32									
Performance	Outlet air pressure dew point °C (*4)	10									
	Pressure drop MPa 50/60Hz (*5)	0.002/0.003	0.002/0.003	0.010/0.013	0.005/0.006	0.006/0.007	0.009/0.012	0.016/0.020	0.011/0.013	0.015/0.020	0.005/0.007
Power		Single-phase 100/100, 110 VAC 50/60 Hz Single-phase 200, 220/200, 220 VAC 50/60 Hz			Single phase AC200, 220/200, 220V 50/60Hz	Three-phase 200/200, 220 VAC 50/60 Hz					
Electrical specifications (*6)	Power consumption (at 100, 110 V) kW 50/60Hz	0.26/0.27,0.30	0.32/0.34,0.41	0.34/0.37,0.40	-	-	-	-	-	-	-
	Power consumption (at 200, 220 V) kW 50/60Hz	0.24,0.28/ 0.26,0.29	0.29,0.35/ 0.32,0.34	0.32,0.36/ 0.36,0.40	0.42,0.47/ 0.48,0.49	0.63/ 0.75,0.78	0.69/ 0.78,0.87	1.21/ 1.48,1.48	1.31/ 1.62,1.64	2.08/ 2.59,2.62	3.15/ 4.07,4.02
	Current consumption (at 100, 110 V) A50/60Hz	3.2/2.8,2.8	3.9/3.4,3.7	4.3/3.8,3.8	-	-	-	-	-	-	-
	Current consumption (at 200, 220 V) A50/60Hz	1.4,1.6/1.3,1.3	1.7,2.1/1.6,1.6	1.8,2.0/1.8,1.8	2.6,2.9/2.5,2.3	2.5/2.5,2.5	3.0/2.8,3.0	4.7/4.8,4.6	5.4/5.7,5.5	8.7/8.5,8.4	11.3/13.5,12.4
	Starting current (at 100 V) A 50/60Hz	11.1/12.1	16.4/17.3	16.4/17.3	-	-	-	-	-	-	-
	Starting current (at 200 V) A 50/60Hz	6.3/6.2	7.7/7.3	7.7/7.3	13.2/12.4	22.5/25.0	27.5/31.5	31.5/40.6	41.3/43.8	43.8/39.1	83.0/77.0
Refrigerant		R-134a			R-410A					R-407C	
Air inlet and outlet port size		R 1/2	R 3/4	R 3/4	R 3/4	R1	R1	R 1	R 1 1/2	R 1 1/2	R 2
Product weight kg		21	26	31	37	39	42	68	84	105	253
Released heat kW 50/60Hz (*7)		0.63/0.70	0.74/0.80	1.1/1.3	1.6/1.7	2.1/2.3	2.3/2.5	4.4/5.0	5.4/6.0	8.5/10.0	10.7/12.3

*1: When the power supply voltage is ±5%.±10% to 2°C for power supply voltage 40.
*2: ANR shows conditions of 20°C atmospheric pressure and relative humidity 65%.
*3: This is a value converted to the intake condition of the air compressor in an environment of 32°C with a relative humidity of 75%.
*4: Contact CKD for information on the dew point performance guarantee.
*5: The pressure drop value is a typical value and is not a guaranteed value.
*6: The power consumption, current consumption and released heat are all reference values under the rated conditions, and are not guaranteed

Heatless dryer(Desiccant)

HD Series

● Compact series with improved installability and reliability
Stable supply of ultra dry air with atmospheric dew point -72°C.

(Catalog No. CB-024SA)

Item	HD-0.5	HD-1	HD-1.5	HD-2	HD-4	HD-6	HD-9
Port size	Rc3/8						Rc3/4
Inlet air pressure range MPa	0.2 to 1.0						
Inlet air temperature range °C	5 to 52						
Ambient temperature °C	−1 to 52						
Regenerating system	Self-regeneration non-heating system						
Regenerative cycle	1 minute (0.5-minute switch)					4 minute (2-minute switch)	
Power supply V	Single-phase 100 VAC, 200 VAC 50/60 Hz						
Power consumption W	26						52
Desiccant	Synthetic zeolite						
Product weight kg	6.5	7.0	7.5	9.5	11.5	21.5	42.5

Super heatless dryer

SHD Series

● Energy saving super heatless dryer which reduces purge flow rate to the limit by dew point monitoring equipment

(Catalog No. CB-024SA)

Item		SHD3025	SHD3045	SHD3075	SHD3100	SHD3125	SHD3150	SHD3200	SHD3240
Working fluid		Compressed air							
Inlet air pressure range MPa		0.4 to 1.0							
Inlet air temperature range °C		5 to 50							
Ambient temperature °C		0 to 40							
Rated voltagematter	Inlet air temperature °C	35 (no water drops)							
	Ambient temperature °C	25							
	Inlet air pressureMPa	0.7							
	Inlet air flow rate m³/min(ANR)	2.5	4.5	7.5	10	12.5	15	20	24
	Outlet pressure dew point °C	-20, -40, -60							
	Average purge rate %	-20°C: 14 / -40°C: 16.5 / -60°C: 23							
Desiccant cylinder module quantity		1	2	3	4	5	6	8	10
Regenerating method		Self-regeneration non-heating system							
Desiccant		Activated alumina, synthetic zeolite							
Dew point sensor		G type: Electrostatic capacitance temperature and humidity sensor / M type: Dew point meter (Electrostatic capacitance polymer sensor)							
Power		Single-phase 100/200 VAC 50/60 Hz							
Power consumption		15 W							
Port size Rc		1	1	$1^1/_2$	$1^1/_2$	2	2	$2^1/_2$	$2^1/_2$
Product weight kg		120	180	240	300	370	430	550	670
Accessory filter (for inlet side) standard		AF2-05M25A	AF2-08M32A	AF2-11M40A	AF2-13M50A	AF2-13M50A	AF2-20M50A	AF2-24M65A	AF2-24M65A
Accessory filter (for outlet side) standard		AF2-05P25A	AF2-08P32A	AF2-11P40A	AF2-13P50A	AF2-13P50A	AF2-20P50A	AF2-24P65A	AF2-24P65A
Accessory filter (for inlet side) option E2		AF4004M-25	AF4007M-40	AF4010M-40	AF4010M-40	AF4013M-50	AF4020M-50	AF5032M-80	AF5032M-80
Accessory filter (for outlet side) option E2		AF4004P-25	AF4007P-40	AF4010P-40	AF4010P-40	AF4013P-50	AF4020S-50	AF5032P-80	AF5032P-80

*1: Attach the included accessory filters on the inlet side and the outlet side.

Super dryer (High polymer membrane air dryer)

SU300E/400E/300D/400D-W Series(Unit)
SD300E/400E/300D/400D-W Series(Single unit)

(Catalog No. CB-024SA)

● High-tech dryer using polymer separation membrane

Item		SU301E-*-W-C3	SU302E-*-W-C3	SU401E-*-W-C3	SU402E-*-W-C3	SU301D-*-W-C3	SU302D-*-W-C3	SU401D-*-W-C3	SU402D-*-W-C3
Configuration		Air filter Oil mist filter (with differential pressure gage) Super dryer (High polymer membrane air dryer) Regulator							
Range of working conditions	Working fluid	Compressed air							
	Inlet air pressure MPa	0.4 to 1.0							
	Proof pressure MPa	1.5							
	Inlet air temperature °C	5 to 50							
	Ambient temperature °C	5 to 50							
Standard rating	Outlet air atmospheric dew point °C	-15				-20			
	Inlet air flow rate ℓ/min (ANR)	75	150	300	450	125	250	500	750
	Outlet air flow ℓ/min (ANR)	67	135	270	405	100	200	400	600
	purge flow rate ℓ/min (ANR)	8	15	30	45	25	50	100	150
	Inlet air pressure dew point °C	25							
	Inlet air pressure MPa	0.7							
	Inlet air temperature °C	25							
	Ambient temperature °C	25							
Air filter	Degree of filtrationμm	5							
Oil mist filter	Oil removal mg/m³	0.1 [about 0.1 PPM] (inlet air at 30°C)							
Regulator	Set pressure range MPa	0.05 to 0.85							
	Relief pressure MPa	Set pressure plus 0.05							
Standard accessories		Pressure gauge/differential pressure gauge/bracket							

(Catalog No. CB-024SA)

Item		SD301E-*-W	SD302E-*-W	SD401E-*-W	SD402E-*-W	SD301D-*-W	SD302D-*-W	SD401D-*-W	SD402D-*-W
Configuration		Super dryer (High polymer membrane air dryer)							
Range of working conditions	Working fluid	Compressed air							
	Inlet air pressure MPa	0.4 to 1.0							
	Proof pressure MPa	1.5							
	Inlet air temperature °C	5 to 50							
	Ambient temperature °C	5 to 50							
Standard rating	Outlet air atmospheric dew point °C	-15				-20			
	Inlet air flow rate ℓ/min (ANR)	75	150	300	450	125	250	500	750
	Outlet air flow ℓ/min (ANR)	67	135	270	405	100	200	400	600
	purge flow rate ℓ/min (ANR)	8	15	30	45	25	50	100	150
	Inlet air pressure dew point °C	25							
	Inlet air pressure MPa	0.7							
	Inlet air temperature °C	25							
	Ambient temperature °C	25							

Super dryer combination

SU3000/4000-W Series (Low dew point)

● Space saving with integrated filter/oil mist filter/super dryer/regulator

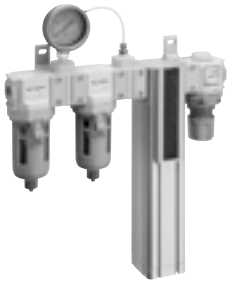

(Catalog No. CB-024SA)

Item		W-A-5103US	W-A-5203US	W-A-5303US	W-A-0503US	W-A-5703US	W-A-0014US	W-B-5103US	W-B-5203US	W-B-0503US	W-B-0504US	W-B-0014US
Range of working conditions	Working fluid	Compressed air										
	Inlet air pressure MPa	0.4 to 1.0										
	Proof pressure MPa	1.5										
	Inlet air temperature °C	5 to 50										
	Ambient temperature °C	5 to 50										
Standard rating	Outlet air atmospheric dew point °C	-20						-40				
	Inlet air flow rate ℓ/min (ANR)	125	300	490	760	1200	1500	35	90	230	410	890
	Outlet air flow ℓ/min (ANR)	100	240	390	610	960	1260	25	65	170	300	650
	purge flow rate ℓ/min (ANR)	25	60	100	150	240	240	10	25	60	110	240
	Inlet air pressure dew point °C	25										
	Inlet air pressure MPa	0.7										
	Inlet air temperature °C	25										
	Ambient temperature °C	25										
Air filter	Degree of filtration μm	5										
Oil mist filter	Oil removal mg/m³	0.1 [about 0.1 PPM] (inlet air at 30°C)										
Regulator	Set pressure range MPa	0.05 to 0.85										
	Relief pressure MPa	Set pressure plus 0.05										
Standard accessories		Pressure gauge/differential pressure gauge/bracket										

Gas generator

(Catalog No. CB-024SA)

Nitrogen Gas Extraction Unit
NS Series

● Easily purifies nitrogen gas by simply connecting compressed air

System
Specifications

Item				NSU-3S	NSU-3L	NSU-4S	NSU-4F	NSU-4L	NSU-4G	NSU-4H
Range of working conditions	Working fluid			Compressed air						
	Inlet air pressure		MPa	0.4 to 1.0 (*1)						
	Proof pressure		MPa	1.5						
	Inlet air temperature		°C	5 to 50						
	Relative humidity of inlet air		RH	50%						
	Ambient temperature		°C	5 to 50						
Rating	Inlet air pressure dew point		°C	10						
	Inlet air pressure		MPa	0.7						
	Inlet air temperature		°C	25						
	Ambient temperature		°C	25						
Rating Flow rate	Outlet nitrogen gas flow rate ℓ/min(ANR) (*2)	nitrogen concentration° (%) or rUp	99.9	1.9	5.6	11.0	20.9	30.6	31.9	49.0
			99	5.0	15.5	28.2	53.6	66.9	81.8	107.0
			97	8.9	28.7	49.9	94.8	118.1	159.7	189.0
			95	14.0	39.8	65.3	124.1	169.2	222.0	270.7
	Inlet air flow rate ℓ/min(ANR)		99.9	17.3	50.9	100.0	190.0	278.2	290.0	445.5
			99	20.9	64.6	117.5	223.3	278.8	340.8	445.8
			97	24.1	77.6	134.9	256.2	319.2	431.6	510.8
			95	31.2	88.5	145.2	275.8	376.0	493.3	601.6
Air filter		Filtration rating μm		5						
Oil mist filter		Oil removal mg/m³		0.01Less than or equal to (0.1 or less after oil saturation) * Primary oil measurement concentration 30mg/m³ and 21°C.						
Regulator		Set pressure range MPa		0.05 to 0.85						
Oxygen monitor				See CC-1355.						
Flow rate sensor				See CC-1355.						
Needle valve		Flow characteristics		See CC-1355.						
Standard accessories				Pressure gauge/differential pressure gauge/bracket						

*1: The inlet air pressure when assembling the NS-QFS-E is 0.4 to 0.75 MPa.
*2:When membrane unit size "H" is selected and the inlet temperature is 50°C, keep the outlet flow rate with 99.9% nitrogen gas concentration at 39 ℓ/min or less.Contact CKD when working beyond the specified range.

Unit
Common specifications

Range of working conditions	Working fluid		Compressed air
	Inlet air pressure	MPa	0.4 to 1.0
	Proof pressure	MPa	1.5
	Inlet air temperature	°C	5 to 50
	Relative humidity of inlet air	RH	50% or less
	Ambient temperature	°C	5 to 50
Rating	Inlet air purity class		1:6:1(JIS B 8392-1:2012, ISO 8573-1:2010)
	Inlet air pressure	MPa	0.7
	Inlet air temperature	°C	25
	Ambient temperature	°C	25

■ Single cylinder

Item				NS-3S1	NS-3L1	NS-4S1	NS-4L1
Rated flow rate	Outlet nitrogen gas flow rate ℓ/min(ANR)	nitrogen concentration° (%) or rUp	99.9	1.9	5.6	11.0	30.6
			99	5.0	15.5	28.2	66.9
			97	8.9	28.7	49.9	118.1
			95	14.0	39.8	65.3	169.2
	Inlet air flow rate ℓ/min(ANR)		99.9	17.3	50.9	100.0	278.2
			99	20.9	64.6	117.5	278.8
			97	24.1	77.6	134.9	319.2
			95	31.2	88.5	145.2	376.0

■ Double cylinder

Item				NS-4S2	NS-4S3	NS-4L2	NS-4L3	NS-4L4	NS-4S6	NS-4S8	NS-4SA	NS-4L6	NS-4L8
Rating Flow rate	Outlet nitrogen gas flow rate ℓ/min (ANR)	nitrogen concentration° (%) or rUp	99.9	22.0	33.0	61.2	91.8	122.4	66.0	88.0	110.0	183.6	244.8
			99	56.4	84.6	133.8	200.7	267.6	169.2	225.6	282.0	401.4	535.2
			97	99.8	149.7	236.2	354.3	472.4	299.4	399.2	499.0	708.6	944.8
			95	130.6	195.9	338.4	507.6	676.8	391.8	522.4	653.0	1015.2	1353.6
	Inlet Air flow rate ℓ/min (ANR)		99.9	200.0	300.0	556.4	834.6	1112.8	600.0	800.0	1000.0	1669.2	2225.6
			99	235.0	352.5	557.6	836.4	1115.2	705.0	940.0	1175.0	1672.8	2230.4
			97	269.8	404.7	638.4	957.6	1276.8	809.4	1079.2	1349.0	1915.2	2553.6
			95	290.4	435.6	752.0	1128.0	1504.0	871.2	1161.6	1452.0	2256.0	3008.0

Note: The product will be floor-mounted for 6 units or more.

For air
Flow rate sensor

(Catalog No.CB-0A24SA)

FLUEREX flow sensor

PFD Series

● Flow rate range: 25 to 500, 50 to 1000, 100 to 2000, 200 to 4000, 400 to 8000, 800 to 160000L/min(normal)

Item		PFD-501-10	PFD-102-15	PFD-202-20	PFD-402-25	PFD-802-40	PFD-163-50
Specifications	Flow rate range L /min(normal)	25 to 500	50 to 1000	100 to 2000	200 to 4000	400 to 8000	800 to 16000
	Port size	Rc3/8	Rc1/2	Rc3/4	Rc1	Rc1 1/2	Rc2
Wiring matter	Working fluid	Compressed clean air/nitrogen gas					
	Air quality	JIS B 8392-1:2012 (ISO 8573-1:2010) [1: 1: 1 to 1: 6: 1] (*1)					
	Max. working pressure MPa	1.0					
	Min. working pressure MPa	0.1					
	Proof pressure MPa	1.5					
	Ambient temperature °C	0 to 50					
	Ambient humidity	85% R.H. or less (no condensation)					
	Fluid temperature °C	0 to 40					
Accuracy	Linearity	±3.0% F.S. (0.5 MPa, at 20°C)					
	Pressure characteristics	±2.0% F.S. (0.5 MPa reference, at 0.2 to 0.7 MPa)					
	Temperature characteristics	±2.0% F.S. (20°C reference, at 10 to 30°C)					
Pressure loss MPa		0.015 or less (max. flow rate, at 0.5 MPa)					
Response time sec		2.5 or less					
Output	Display	Instant/accumulated flow 4-digit LED display					
	resolution L /min(normal)	1	5	5	10	20	50
	Min. displayed flow rate L /min(normal)	10	20	40	80	160	320
	Accumulated flow	Max. 9 digits (switching display using change key) (*4)					
	Analog output	Standard: 0 to 5 VDC/option: 4 to 20 mADC, 1 to 5 V, 0 to 10 V					
	Switch output	2 points (NPN/PNP transistor output: selection)					
	Pulse output (*2)	10L (normal)/pulse				100L(normal)/pulse	
Power supply voltage V		24 VDC (6 W or less/excluding load current of switch output)					
Cable		Accessory (3 m, 4-conductor, final diameter ø6, core wire 0.5mm^2, insulator outer diameter 1.72mm, with connector)					
Mounting	Mounting orientation	Unrestricted in vertical/horizontal directions					
	Straight piping section	IN side: 10D, OUT side: 5D, these are recommended (*3)					
Degree of protection		IP64 equivalent (only for sensor)					
Weight kg		1.1	1.1	1.3	1.4	1.7	4.5

*1: Note that condensation may be formed when used in a state with ambient temperature lower than fluid temperature.
Note that detection failure may occur if transmitted oil is accumulated.
Because this kit does not have clean Component specifications, the generation of particles occurs on the secondary side.
If ultra clean air is required, it is recommended to install a filter for precise filtration on the end side.
*2: The pulse output is shared with the switch output.Use this output by switching the function.
*3: Providing straight piping sections is recommended so that the piping conditions do not affect the performance (D is inner diameter of the pipe).
*4: The data of accumulated flow value is backed up regularly.It can also be backed up by operation.

For water
Flow rate sensor

(Catalog No. CB-024SA)

FLUEREX flow sensor

WFK3000 Series

● Water flow sensor that uses Karman's vortex and realizes reliability and ease of use

[WFK3000S Series (compact equipment integrated sensor)]

Model No. / Item		WFK3004S -10	WFK3004S -15	WFK3012S -10	WFK3012S -15	WFK3032S -10	WFK3032S -15	WFK3060S -20	WFK3060S -25
Flow rate range L/min		0.5 to 4.0		1.5 to 12		4.0 to 32		8.0 to 60	
Port size Rc		3/8	1/2	3/8	1/2	3/8	1/2	3/4	1
Port material		Stainless steel: SCS13							
Working conditions	Applicable fluid	Pure water, industrial water							
	Max. working pressureMPa	1.0							
	Proof pressureMPa	1.5							
	Ambient temperature°C	0to50(85%RH orDown)							
	Fluid temperature°C	1 to 70							
Accuracy		±2.5% F.S.							
Temperature characteristics		±5% F.S.(10to50°C, 20°C reference)							
Pressure lossMPa		0.06 or less (at 4.0 ℓ/min)		0.05 or less (at 12 ℓ/min)		0.06 or less (at 32 ℓ/min)		0.05 or less (at 60 ℓ/min)	
Response time		1 sec (*1)							
Output	Display	No							
	Analog output	Standard: 0 to 5 VDC/option: 4 to 20 mADC, 1 to 5 V, 0 to 10 V							
Power supply voltage		12 to 24 VDC ± 10% (max. 80 mA) For option A3: 15 to 24 VDC							
Cable		3 m, 4-conductor, final diameter 4.8mm, core wire 0.2mm^2, insulator outer diameter 1.3mm							
Mounting	Mounting orientation	Unrestricted in vertical/horizontal direction							
	Straight piping section	None (*2)							IN side 10D, OUT side 5D
	Degree of protection	IP 65 or equiv.							
Weight g		380	410	380	410	380	410	470	510
Bracket weight g		28 (including screws)							

*1: The time to attain 70% of the original output after the normal flow rate (used) drops instantly to 0.
*2:Installing straight pipes (10D on the IN side and 5D on the OUT side) is recommended so that the piping conditions do not affect(D is the port size).

[WFK3000M Series (compact equipment integrated switch)]

Model No. / Item		WFK3004M -10	WFK3004M -15	WFK3012M -10	WFK3012M -15	WFK3032M -10	WFK3032M -15	WFK3060M -20	WFK3060M -25
Flow rate rangeL/min		0.5 to 4.0		1.5 to 12		4.0 to 32		8.0 to 60	
Port size Rc		3/8	1/2	3/8	1/2	3/8	1/2	3/4	1
Port material		Stainless steel: SCS13							
Working conditions	Applicable fluid	Pure water, industrial water							
	Max. working pressureMPa	1.0							
	Proof pressureMPa	1.5							
	Ambient temperature°C	0to50(85%RH orDown)							
	Fluid temperature°C	1 to 70							
Accuracy		±2.5% F.S.±1digit(1digit=0.1L/min(10L/minMifull),1L/min(10L/minorabove)							
Temperature characteristics		± ±5% F.S. (10 to 50°C, base temperature 20°C)							
Pressure lossMPa		0.06 or less (at 4.0 ℓ/min)		0.05 or less (at 12 ℓ/min)		0.06 or less (at 32 ℓ/min)		0.05 or less (at 60 ℓ/min)	
Response time		1 sec (*1)							
Output	Display	Instantaneous flow rate 2-digit LED display							
	Switch output: Number of points	2-point transistor output (select NPN/PNP)							
	Switch output: Rating	MAX.DC50mA							
	Switch output: Internal voltage drop	(NPN) 2.0 V or less (PNP) 2.5 V or less							
Power supply voltage		DC12to24V±10%(MAX80mA)							
Cable		3 m, 4-conductor, final diameter 4.8mm, core wire 0.2mm^2, insulator outer diameter 1.3mm							
Mounting	Mounting orientation	Vertical/Unrestricted							
	Straight piping section	Without (*2)							IN side 10D, OUT side 5D
	Degree of protection	IP 65 or equiv.							
Weight g		380	410	380	410	380	410	470	510
Bracket weight g		28 (including screws)							

*1:When the switch output is set to 70% of the normal flow rate (used), the time until the switch output occurs after the flow rate drops instantly to 0.
*2:Installing straight pipes (10D on the IN side and 5D on the OUT side) is recommended so that the piping conditions do not affect(D is the port size).

For water

Flow rate sensor

(Catalog No. CB-024SA)

FLUEREX flow sensor(Standard)

WFK3000 Series

[WFK3000C Series (compact equipment integrated sensor/switch)]

Model No. / Item			WFK3004C -10	WFK3004C -15	WFK3012C -10	WFK3012C -15	WFK3032C -10	WFK3032C -15	WFK3060C -20	WFK3060C -25
Flow rate range L/min			0.5 to 4.0		1.5 to 12		4.0 to 32		8.0 to 60	
Port size Rc			3/8	1/2	3/8	1/2	3/8	1/2	3/4	1
Port material			Stainless steel: SCS13							
Working conditions	Applicable fluid		Pure water, industrial water							
	Max. working pressure MPa		1.0							
	Proof pressure MPa		1.5							
	Ambient temperature °C		0to50(85%RH orDown)							
	Fluid temperature °C		1 to 70							
Accuracy			±2.5% F.S. ±1 digit (1 digit = 0.1 ℓ/min (less than 10 ℓ/min), 1 ℓ/min (10 ℓ/min and over))							
Temperature characteristics			± ±5% F.S. (10 to 50°C, base temperature 20°C)							
Pressure loss MPa			0.06 or less(at 4.0L/min)		0.05 or less (at 12 ℓ/min)		0.06 or less (at 32 ℓ/min)		0.05 or less (at 60 ℓ/min)	
Response time			1 sec (*1)							
Output	Display		Instantaneous flow rate 2-digit LED display							
	Analog output		Standard: DC0~5V/option: DC4~20mA, 1~5V, 0~10V							
	Switch output	Number of points	1PointTransistor output(NPN/PNPSelection)							
		Rating	MAX.DC50mA							
		Internal voltage drop	(NPN) 2.0 V or less (PNP) 2.5 V or less							
Power supply voltage			DC12to24V±10%(MAX80 mA) Option A3 is DC15~24V							
Cable			3 m, 4-conductor, final diameter 4.8mm, core wire 0.2mm^2, insulator outer diameter 1.3mm							
Mounting	Mounting orientation		Unrestricted in vertical/horizontal direction							
	Straight piping section		Without (*2)						IN side 10D, OUT side 5D	
	Degree of protection		IP 65 or equiv.							
Weight g			380	410	380	410	380	410	470	510
Bracket weight g			28 (including screws)							

*1: When the switch output is set to 70% of the normal flow rate (used), the time until the switch output occurs after the flow rate drops instantly to 0.

*2: Installing straight pipes (10D on the IN side and 5D on the OUT side) is recommended so that the piping conditions do not affect(D is the port size).

Control valve

(Catalog No. CB-03-1SA)

Integrated unit for water control

WXU Series

Next-gen Water Control

Various water fluid control components
fitted into a compact structure

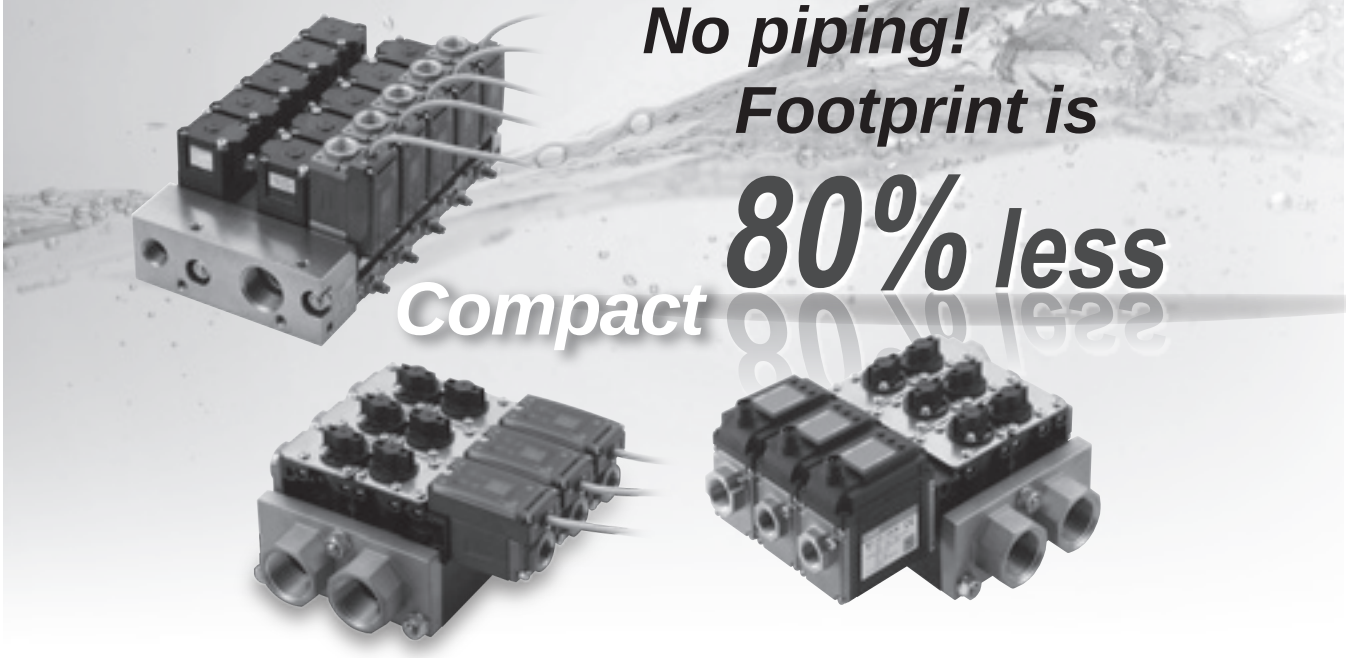

- ► No more individual piping work
- ► Reduced pipe leakage
- ► Minimizing design and arrangement work

WXU Series
Integrated unit for water control

System image

Two fluid control

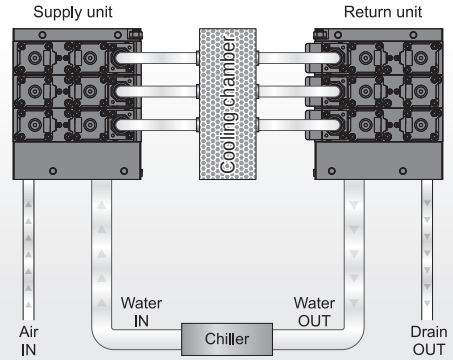

One fluid control

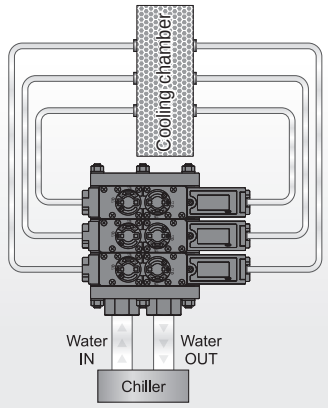

WXU-H — One fluid

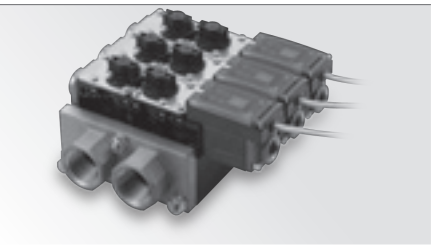

- A single unit serves as supply and return units.
- Valves can be mounted individually on the supply side and return side.
- Cock type valve that opens and closes with a single operation helps easy visual check.
- Built-in structure and light valve housing make handling easier.

WXU-HC — One fluid New

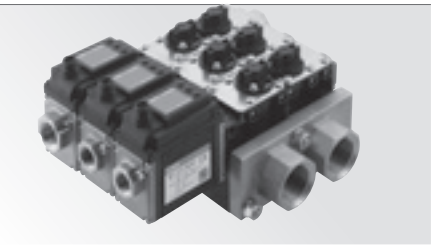

- Similar to WXU-H, a cock valve for 1 fluid specifications is introduced to control both of the supply and return sides by 1 unit.
- Installing a capacitance electromagnetic flow sensor enables to reduce the risk of detection errors affected by the quality of water.

WXU-J — One fluid

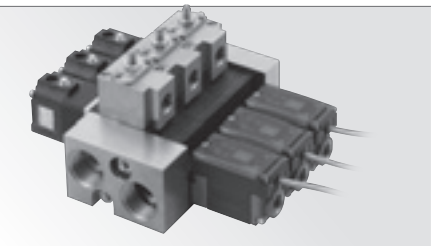

- A single unit serves as supply and return units.
- Valves and needles mounted on the supply side can be controlled individually (on/off) for each system.
- Mounted needles help easy adjustment of the flow rate.

WXU-P — Two fluid

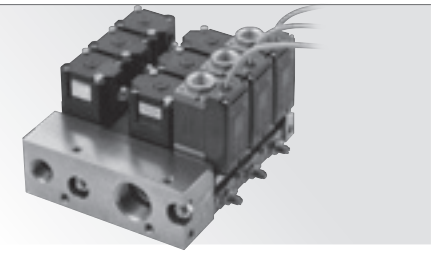

- Separate units for supply and return enable passing of two kinds of fluid (e.g., water and air).
- Suitable for a system with both coolant and air such as sputtering equipment.
- Individual control (water conduction/air purge control) per system is possible.

Application

Liquid crystal semiconductor vacuum sputtering equipment

WXU-P/H

Spot welding machine

WXU-HC

Casting

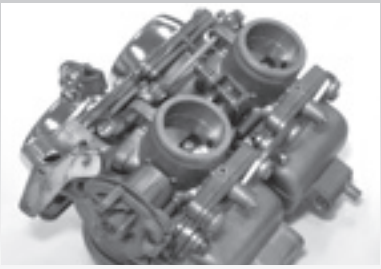

WXU-P/J/H

Customization example

Customization is possible according to your specific needs.

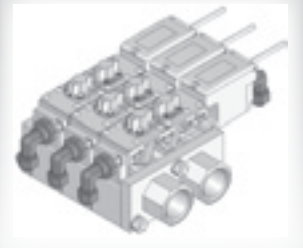

With fitting

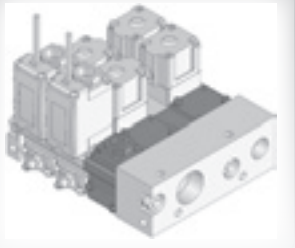

Masking

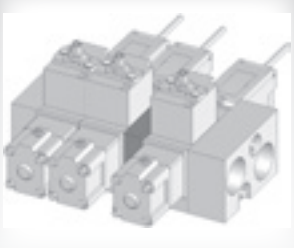

Intermediate block

- Separately installed indicator (sensor part)
- Analog + SW output (sensor part)
- Branched (WXU-P)
- No cylinder valve (WXU-J)

Control valve

Diaphragm Cylinder valve
LAD Series

(Catalog No. CB-03-1SA)

Common specifications

Item		PTFE diaphragm			EPDM diaphragm		
		LAD1	LAD2	LAD3	LAD1	LAD2	LAD3
Actuation		NC (normally closed)	NO (normally open)	Double acting	NC (normally closed)	NO (normally open)	Double acting
Working fluid		Water, pure water, air, N_2Gas, non-corrosive/non-absorbable fluid (*1)					
Fluid temperature	°C	5 to 90 (*2)			0 to 60 (no freezing)		
Proof pressure (water pressure)	MPa	0.9			1.5(10A/15A) 1.2(20A/25A)		
Working pressure range (A→B)	MPa	0 to 0.3			0 to 0.5(10A/15A) 0 to 0.4(20A/25A)		
Valve seat leakage	cm^3/min	0 (water pressure), 1 or less (pneumatic pressure)			0 (water pressure), 0.12 or less (pneumatic pressure)		
Back pressure	MPa	0 to 0.1					
Ambient temperature	°C	0 to 60					
Mounting orientation		Unrestricted					
Operating section	Pilot air pressure MPa	0.3 to 0.5		0.3 to 0.4	0.3 to 0.5		0.3 to 0.4
	Pilot port size	Rc1/8 (*3)					

*1: Check the compliant of product structural materials, working fluids and atmosphere.Strong acids and highly absorbable fluids cannot be used.
*2: 5 to 100°C for stainless steel body (SCS13).
*3: With stainless steel reinforcing ring.

Port size specifications

Item / Model No.	Port size	Orifice size mm	Cv	Frequency cycles/min.	Weight kg	
					PPS body	SCS13 body
LAD*-10A	Rc3/8	8	1.7	30 or less	0.15	0.3
LAD*-15A	Rc1/2	12	3.3	20 or less	0.28	0.6
LAD*-20A	Rc3/4	20	8.5	20 or less	0.55	1.1
LAD*-25A	Rc1	20	8.5	20 or less	0.60	1.2

How to order

LAD 1 - 15 A - C B

Model No. Ⓐ Actuation Ⓑ port size Ⓒ Material combination Ⓓ Other options

Code	Description
Ⓐ Actuation	
1	NC (normally closed)
2	NO (normally open)
3	Double acting

Ⓑ Port size	
10A	Rc3/8
15A	Rc1/2
20A	Rc3/4
25A	Rc1

Ⓒ Material combination		
	Body	Diaphragm
P	PPS	EPDM
C	PPS	PTFE
R	SCS13	EPDM
F	SCS13	PTFE

Ⓓ Other options	
Blank	No option
1	With flow rate adjustment
B	Mounting plate

Dimensions

●PPS body

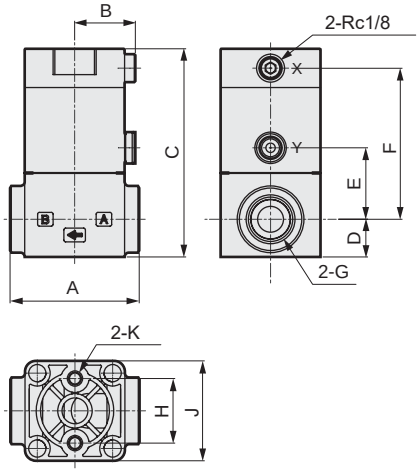

●Stainless steel body

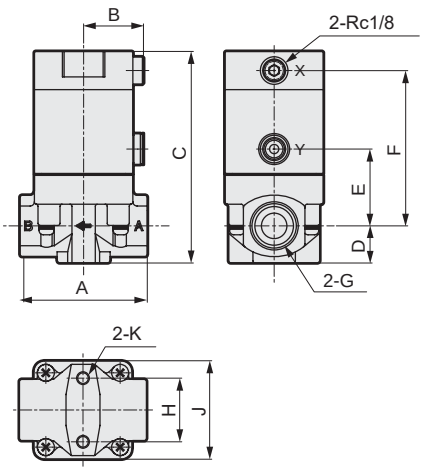

Model No.	A	B	C	D	E	F
LAD*-10A	47	23	77 (80)	14.5	25.5 (28.5)	55.5 (58.5)
LAD*-15A	60	28	96.5 (99.5)	17.5	33 (36)	70 (73)
LAD*-20A	75	35	114.5 (117.5)	22	40.5 (43.5)	83 (86)
LAD*-25A	85	35	121.5	25.5	44	86.5

Model No.	G	H	J	K
LAD*-10A	Rc3/8	20	36	M5 depth 7
LAD*-15A	Rc1/2	30	46.5	M6 depth 8
LAD*-20A	Rc3/4	38	60	M6 depth 10
LAD*-25A	Rc1	38	60	M6 depth 10

Note:(Dimensions shown in) are for stainless steel body.

Introduction of conventional products

Introduction of products listed on conventional New Fine Systems. For new designing, we recommend to select from models listed in body.

Index | Page

Pneumatic cylinders [CMK2, SCA2, SSD, STS/L, RRC] Ending 30

Pneumatic valves [B, 4SB0, 3PA/B, 3MA/B0, 4KA/B] Ending 34

Miniature speed controller [SC-M3, M5] Ending 44

Pneumatic cylinders

Medium bore size cylinder

CMK2 Series

Specifications

Item		CMK2-P7/P71			
Bore size	mm	ø20	ø25	ø32	ø40
Actuation		Double acting			
Working fluid		Compressed air			
Max. working pressure	MPa	1.0			
Min. working pressure	MPa	0.1			
Proof pressure	MPa	1.6			
Ambient temperature	°C	-10 to 60 (no freezing)			
Port size		Rc1/8			
Port size (relief port)		M5			
Stroke tolerance	mm	$^{+2.0}_{+0}$ (up to 200), $^{+2.4}_{+0}$ (200 or more)			
Working piston speed	mm/s	50 to 500			
Cushion		Rubber cushion			
Lubrication		Not available			

Stroke length

Bore size (mm)	Standard stroke length (mm)	Max. stroke length (mm)	Min. stroke length (mm) (If it is with switch)
ø20	25/50/75/100 150/200/250 300	750	15 (10) The value in ( ) indicates for types with one switch.
ø25			
ø32			
ø40			

Medium bore size cylinder

SCA2 Series (custom order product)

Specifications

Item		SCA2-P7/P71		
Bore size	mm	ø40	ø50	ø63
Actuation		Double acting		
Working fluid		Compressed air		
Max. working pressure	MPa	1.0		
Min. working pressure	MPa	0.05		
Proof pressure	MPa	1.6		
Ambient temperature	°C	-10 to 60 (no freezing)		
Port size		Rc1/4	Rc3/8	Rc3/8
Port size (relief port)		M5		
Stroke tolerance	mm	$^{+0.9}_{0}$ (up to 360), $^{+1.4}_{0}$ (up to 600)		
Working piston speed	mm/s	50 to 1000 (Operate within the absorbed energy.)		
Cushion		With or without cushion can be selected		
Lubrication		Not available		

Stroke length

Bore size (mm)	Standard stroke length (mm)	Max. stroke length (mm)	Min. stroke length (mm) (If it is with switch)
ø40	25/50/75/100/150 200/250/300/350 400/450/500	600	10
ø50			
ø63			

Guided cylinder

STS/STL Series

Specifications

Item	STS-B-P7*/P5* (short stroke length) STL-B-P7*/P5* (long stroke length)									
Bore size mm	ø8	ø12	ø16	ø20	ø25	ø32	ø40	ø50	ø63	ø80
Actuation	Double acting									
Working fluid	Compressed air									
Max. working pressure MPa	1.0									
Min. working pressure MPa	0.15					0.1				
Proof pressure MPa	1.6									
Ambient temperature °C	--10 to 60 (no freezing)									
Port size	M5					Rc1/8		Rc1/4		Rc3/8
Port size (relief port)	M5					Rc1/8		Rc1/4		Rc3/8
Stroke tolerance mm	+2.0 0									
Working piston speed mm/s	50 to 500								50 to 300	
Cushion	With rubber cushion									
Lubrication	Not available									
Allowable energy absorption J	0.029	0.056	0.088	0.157	0.157	0.401	0.627	0.980	1.560	2.510

Stroke length

● Short stroke STS

Bore size	Standard stroke length (mm)	Max. stroke length (mm)	Min. stroke length (mm)	Min. stroke with switch (mm)
ø8	10, 20, 30 40, 50	50	5	5 With one or two switches
ø12				
ø16				
ø20	25, 50			
ø25				
ø32				
ø40				
ø50				
ø63				
ø80	25, 50, 75, 100	100		

● Long stroke length STL

Bore size	Standard stroke length (mm)	Max. stroke length (mm)	Min. stroke length (mm)	Min. stroke with switch (mm)
ø8	50, 75, 100 125, 150 175, 200	200	50	50 With one or two switches
ø12				
ø16				
ø20	50, 75, 100 125, 150, 175 200, 225, 250 275, 300, 325 350, 375, 400	400	30	30 With one or two switches
ø25				
ø32				
ø40				
ø50				
ø63				
ø80	75, 100, 125, 150, 175, 200, 225, 250, 275, 300, 325, 350, 375, 400		55	55 With one or two switches

Note: The custom stroke length is available by 5 mm increments.
However, the total length is the same as that of the next longer standard stroke length.

Compact cylinder

SSD Series

Specifications

Item	SSD-P7*/P5* SSD-L-P7*/P5* (white switch)												
Bore size mm	ø12	ø16	ø20	ø25	ø32	ø40	ø50	ø63	ø80	ø100	ø125	ø140	ø160
Actuation	Double acting												
Working fluid	Compressed air												
Max. working pressure MPa	1.0												
Min. working pressure MPa	0.15							0.1					
Proof pressure MPa	1.6												
Ambient temperature °C	-10 to 60 (no freezing)												
Port size	M5				Rc1/8		Rc1/4	Rc3/8					
Port size (relief port)	M5				Rc1/8		Rc1/4	Rc3/8					
Stroke tolerance mm	+1.0 0										+2.0 0		
Working piston speed mm/s	50 to 500							50 to 300					
Cushion	None										Rubber cushion		
Lubrication	Not available												
Allowable energy absorption J	0.004	0.01	0.016	0.021	0.025	0.092	0.1	0.12	0.27	0.56	6.52	6.52	7.78

Stroke length

Bore size	Standard stroke length (mm)	Max. stroke length (mm)	Min. stroke length (mm) (with switch)
ø12	5, 10, 15, 20, 25, 30	30	1 (5) The value in ( ) is for types with one or two switches.
ø16			
ø20			
ø25	5, 10, 15, 20, 25, 30, 40, 50	50	
ø32			
ø40			
ø50			
ø63	5, 10, 20, 30, 40, 50	50	
ø80			
ø100			
ø125	10, 20, 30, 40, 50, 60, 70, 80, 90, 100	300	
ø140			
ø160			

Rotary actuator (rack and pinion mechanism)

RRC Series

Specifications

Item		RRC-P7		
Size		8	32	63
Effective torque	N·m	0.7	3.1	5.6
Actuation		Rack and pinion mechanism		
Working fluid	MPa	Compressed air		
Max. working pressure	MPa	1.0		
Min. working pressure (*2)	MPa	0.1		
Proof pressure	MPa	1.6		
Ambient temperature	°C	-10 to 60 (no freezing)		
Port size		Rc1/8		
Port size (relief port)		M5		
Oscillating angle tolerance	Degree	90^{+8}_{+1}, 180^{+8}_{+1}, 270^{+8}_{+1}		
Cushion		Rubber cushion	Air cushion	
Allowable energy absorption	J	0.05	0.21	0.41
Lubrication		Not available		
Volumetric capacity cm3	90°	3	12	22
	180°	6	24	44
	270°	9	36	66

*1: An effective torque value is a value at working pressure 0.5 MPa.

*2: When using RRC-8 with max. oscillating angle, make working pressure 0.3 MPa and over.

Max. load

Load applied to shaft should be under the values below.

Model No. / Load direction	RRC-8	RRC-32	RRC-63
Thrust load F1	9.8	39.2	58.8
Radial load F2	19.6	78.4	117.6

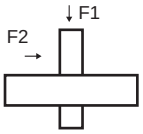

Pneumatic valves

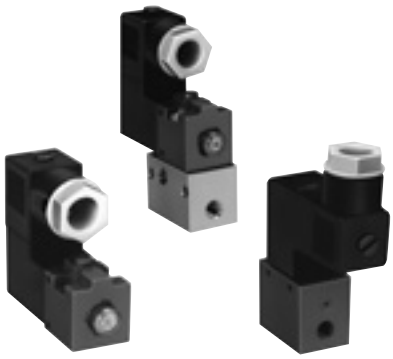

Pilot operated 2, 3-port valve (miniature pneumatic valve)

Discrete B Series

Common specifications

Item		B51**-P7
Valve and operation		Pilot operated poppet valve
Working fluid		Compressed air (low vacuum)
Max. working pressure	MPa	Refer to Individual specifications listed below
Min. working pressure	MPa	Refer to Individual specifications listed below
Proof pressure	MPa	Refer to Individual specifications listed below
Ambient temperature	°C	-10 to 50 (no freezing)
Fluid temperature	°C	5 to 50
Lubrication		Not required
Degree of protection		Dust proof
Vibration resistance	m/s^2	50 or less
Shock resistance	m/s^2	300 or less
Atmosphere		Containing corrosive gas is impermissible

Electrical specifications

Item			
Rated voltage V	DC		12, 24
Voltage fluctuation range			±10%
Starting current A	DC	12 V	0.150
		24 V	0.075
Holding current A	DC	12 V	0.150
		24 V	0.075
Power consumption W	DC	12 V	1.8
		24 V	1.8
Thermal class			B
Temperature rise	°C		45

Individual specifications

Item		2-port valve		3-port valve	
		B5122	B5126	B5132	B5136
Max. working pressure	MPa	1.0	0.6	1.0	0.6
Min. working pressure	MPa	0.1	0.1 (*2)	0.1	0.1 (*2)
Proof pressure	MPa	1.5	1.5	1.5	1.5
Port size		M 5	M 5	M 5	M 5
Effective cross-sectional area	mm^2	0.62	0.76	P→B : 0.62 B→R : 0.84	P→B : 0.76 B→R : 0.84
Response time *1	ms	30 or less	30 or less	30 or less	30 or less
Weight	g	93	93	93	93

*1: Response time is the time required for the valve to turn on at a supply pressure of 0.5 MPa and without lubrication.
It depends on the pressure and the lubricant quality.
*2: When the pressure classification V (for low pressure, for low vacuum pressure), the units can be used with a low pressure (0 to 0.29 MPa) or a low vacuum (3.3 to 101.00 kPa (abs)).

2, 3-port pilot operated valve

Individual wiring manifold P*B Series

Common specifications

Item		P51**-P7
Manifold method		Manifold integrated
Manifold		Common supply/common exhaust
Station No.		2 to 10 stations
Valve and operation		Pilot operated poppet valve
Working fluid		Compressed air/low vacuum
Max. working pressure	MPa	Refer to Individual specifications listed below
Min. working pressure	MPa	Refer to Individual specifications listed below
Proof pressure	MPa	Refer to Individual specifications listed below
Ambient temperature	°C	-10 to 50 (no freezing)
Fluid temperature	°C	5 to 50
Lubrication		Not required
Degree of protection		Dust proof
Vibration resistance	m/s^2	50 or less
Shock resistance	m/s^2	300 or less
Atmosphere		Containing corrosive gas is impermissible

Electrical specifications

Item			
Rated voltage V	DC		12, 24
Rated voltage fluctuation range			±10%
Starting current A	DC	12 V	0.150
		24 V	0.075
Holding current A	DC	12 V	0.150
		24 V	0.075
Power consumption W	DC	12 V	1.8
		24 V	1.8
Thermal class			B
Temperature rise	°C		45

Individual specifications

Item		2-port valve		3-port valve	
		B5122	B5124	B5132	B5136
Max. working pressure	MPa	1.0	0.6 (≈87psi, 6bar)	1.0	0.6 (≈87psi, 6bar)
Min. working pressure	MPa	0.1 (≈15psi, 1bar)	0.1*2	0.1 (≈15psi, 1bar)	0.1*2
Proof pressure	MPa	1.5	1.5	1.5	1.5
Orifice		ø1.2	ø1.6	ø1.2	ø1.6
Effective cross-sectional area	mm^2	0.62	0.76	P→B : 0.62 B→R : 0.84	P→B : 0.76 B→R : 0.84
Response time *1	ms	30 or less		30 or less	

*1: Response time is the time required for the valve to turn on at a supply pressure of 0.5 MPa and without lubrication.
It depends on the pressure and the lubricant quality.
*2: When the pressure classification V (for low pressure, for low vacuum pressure), the units can be used with a low pressure (0 to 0.29 MPa) or a low vacuum (3.3 to 101.00 kPa (abs)).

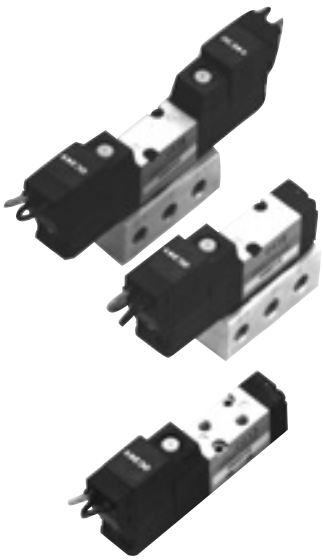

Pilot operated 5-port valve (small pneumatic valve)

Discrete 4SB0 Series

Common specifications

Item		4SB0-P7
Valve and operation		Pilot operated soft spool valve
Working fluid		Compressed air
Max. working pressure	MPa	0.7
Min. working pressure	MPa	Refer to Individual specifications listed below
Proof pressure	MPa	1.05
Ambient temperature	°C	5 to 50
Fluid temperature	°C	5 to 50
Lubrication		Not required
Degree of protection		Dust proof
Vibration resistance	m/s^2	50 or less
Shock resistance	m/s^2	300 or less
Atmosphere		Containing corrosive gas is impermissible

Electrical specifications

Item			
Rated voltage	V	24 DC	12 DC
Voltage fluctuation range		±10%	
Rated current	A*1	0.025 (0.029)	0.050 (0.058)
Power consumption	W*1	0.6 (0.7)	0.6 (0.7)
Thermal class		B	
Temperature rise	°C	50	

*1: The values inside the brackets are for cases with a lamp and surge suppressor.
*2: The power consumption for 6/5 VDC will be 0.9 (1.0) W.

Individual specifications

Item			4SB0
Min. working pressure MPa	2-position	Single	0.15
		Double	0.10
	3-position	All ports closed	0.20
		A/B/R connection	
		P/A/B connection	
Port size			M5
Effective cross-sectional area mm^2	2-position	Single	1.8
		Double	
	3-position	All ports closed	1.5
		A/B/R connection	
		P/A/B connection	
Response time *3 ms	2-position		20 or less
	3-position		30 or less
Weight g	2-position	Single	43
		Double	55
	3-position		59

*3: Response time is the time required for the valve to turn on at a supply pressure of 0.5 MPa and without lubrication.
It depends on the pressure and the lubricant quality.

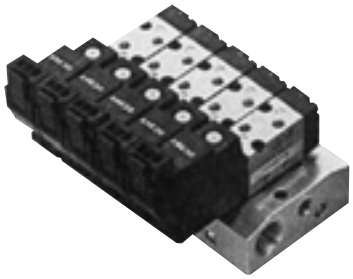

Pilot operated 5-port valve (small pneumatic valve)

Individual wiring manifold M4SB0 Series

Common specifications

Item		M4SB0-P7
Manifold method		Manifold integrated
Manifold		Common supply, common exhaust
Station No.		2 to 20 stations
Valve and operation		Pilot operated soft spool valve
Working fluid		Compressed air
Max. working pressure	MPa	0.7
Min. working pressure	MPa	Refer to Individual specifications listed below
Proof pressure	MPa	1.05
Ambient temperature	°C	5 to 50
Fluid temperature	°C	5 to 50
Lubrication		Not required
Degree of protection		Dust proof
Vibration resistance	m/s^2	50 or less
Shock resistance	m/s^2	300 or less
Atmosphere		Containing corrosive gas is impermissible

Electrical specifications

Item			
Rated voltage	V	24 DC	12 DC
Voltage fluctuation range		±10%	
Rated current	A*1	0.025 (0.029)	0.050 (0.058)
Power consumption	W*1	0.6 (0.7)	0.6 (0.7)
Thermal class		B	
Temperature rise	°C	50	

*1: The values inside the brackets are for cases with a lamp and surge suppressor.
*2: The power consumption for 6/5 VDC will be 0.9 (1.0) W.

Individual specifications

Item			4SB0
Min. working pressure MPa	2-position	Single	0.15
		Double	0.10
	3-position	All ports closed	0.20
		A/B/R connection	
		P/A/B connection	
Port size	P port		M5, Rc1/8
	A/B port		M5
	Port R		Rc1/8
Effective cross-sectional area mm^2	2-position		1.8
	3-position		1.5
Response time *1 ms	2-position		20 or less
	3-position		30 or less

*1: Response time is the time required for the valve to turn on at a supply pressure of 0.5 MPa and without lubrication.
It depends on the pressure and the lubricant quality.

3-port direct acting valve (pneumatic valve)

Discrete 3PA/3PB Series

Common specifications

Item		3P*-P7
Valve and operation		Direct acting poppet valve
Working fluid		Compressed air and low vacuum
Max. working pressure	MPa	0.7
Min. working pressure	kPa	Low vacuum: -100 kPa
Max. operating pressure differential	MPa	0.7
Proof pressure	MPa	1.05 (low vacuum: -101 kPa)
Ambient temperature	°C	-5 to 50
Fluid temperature	°C	5 to 50
Lubrication		Not required
Degree of protection		Dust proof
Vibration resistance	m/s^2	50 or less
Shock resistance	m/s^2	300 or less
Atmosphere		Containing corrosive gas is impermissible

Electrical specifications

Item		3PA1 3PB1	3PA2 3PB2
Rated voltage V	AC	100, 200 (50/60 Hz)	
	DC	24	
Voltage fluctuation range		±10%	
Starting current A	100 VAC	0.032/0.027	0.068/0.054
	200 VAC	0.016/0.014	0.023/0.021
	24 VDC	---	---
Holding current A	100 VAC	0.028/0.022	0.041/0.032
	200 VAC	0.014/0.011	0.020/0.016
	24 VDC	0.075	0.075
Power consumption W	100 VAC	1.8/1.4 (2.0/1.6)	2.2/1.8 (1.8/1.5)
	200 VAC	1.8/1.4 (2.0/1.6)	2.2/1.8 (1.8/1.5)
	24 VDC	1.8 (2.0)	1.8 (2.0)
Thermal class		B	
Temperature rise	°C	50	

Reference: 100, 200 VAC coil can be used with 110, 220 VAC 60 Hz.

Individual specifications

Item		3PA1	3PA2	3PB1	3PB2
Port size		M5	Rc1/8	Rc1/8	Rc1/8, 1/4
Effective cross-sectional area mm^2	Port 1→2	2.0	4.8	1.9	4.6
	Port 2→1	2.2	5.4	2.0	5.2
	Port 2→3	2.4	5.4	2.2	5.0
	Port 3→2	2.1	4.7	2.0	4.4
Response time *1	ms	20 or less	20 or less	20 or less	20 or less
Weight	g	54	127	84	175

*1: Response time is the time required for the valve to turn on at a supply pressure of 0.5 MPa and without lubrication. It depends on the pressure and the lubricant quality.

3 valve port direct acting valve (pneumatic valve)

Individual wiring manifold M3PA/M3PB Series

Common specifications

Item		M3P*-P7
Manifold method		Sub-plate integrated
Station No.		2 to 20 stations
Valve and operation		Direct acting poppet valve
Working fluid		Compressed air and low vacuum
Max. working pressure	MPa	0.7
Min. working pressure	kPa	Low vacuum: -100 kPa(≈-15psi, -1bar)
Max. operating pressure differential	MPa	0.7
Proof pressure	MPa	1.05 (low vacuum: -100 kPa(≈-15psi, -1bar))
Ambient temperature	°C	-5 to 50
Fluid temperature	°C	5 to 50
Lubrication		Not required
Degree of protection		Dust proof
Vibration resistance	m/s^2	50 or less
Shock resistance	m/s^2	300 or less
Atmosphere		Containing corrosive gas is impermissible

Electrical specifications

Item		3PA1 3PB1	3PA2 3PB2
Rated voltage V	AC	100, 200 (50/60 Hz)	
	DC	24	
Voltage fluctuation range		±10%	
Starting current A	100 VAC	0.032/0.027	0.068/0.054
	200 VAC	0.016/0.014	0.023/0.021
	24 VDC	---	---
Holding current A	100 VAC	0.028/0.022	0.041/0.032
	200 VAC	0.014/0.011	0.020/0.016
	24 VDC	0.075	0.075
Power consumption W	100 VAC	1.8/1.4 (2.0/1.6)	2.2/1.8 (1.8/1.5)
	200 VAC	1.8/1.4 (2.0/1.6)	2.2/1.8 (1.8/1.5)
	24 VDC	1.8 (2.0)	1.8 (2.0)
Thermal class		B class molded coil	
Temperature rise	°C	30	

Reference: 100, 200 VAC coil can be used with 110, 220 VAC 60 Hz.

Individual specifications

Item		M3PA1	M3PA2	M3PB1	M3PB2
Manifold		Port 2/3: individual Port 1/3: common	Port 2/3: individual Port 1/3: common	Port 1/2: individual Port 3/3: common Port 2/3: individual Port 1/3: common	Port 2/3: individual Port 1/3: common
Port size	Port 1→2	Port 2/3: individual Port 1/3: common	Port 2/3: individual Port 1/3: common	RC1/4: common RC1/8: individual	RC1/4: common RC1/8: individual
	Port 2→1	RC1/4: common	RC1/4: common	RC1/8: individual	RC1/8: individual
	Port 3→2	M5: individual	RC1/8: individual	RC1/4: common RC1/8: individual	RC1/4: common RC1/8: individual
Effective cross-sectional area mm^2		2	5	2	5
Response time *1 ms		20 or less	20 or less	20 or less	20 or less

*1: Response time is the time required for the valve to turn on at a supply pressure of 0.5 MPa and without lubrication.
It depends on the pressure and the lubricant quality.

3-port direct acting valve (small pneumatic valve)

Discrete 3MA0/3MB0 Series

Common specifications

Item		3P*-P7
Valve and operation		Direct acting poppet valve
Working fluid		Compressed air
Max. working pressure	MPa	0.7
Min. working pressure	MPa	0.00
Proof pressure	MPa	1.05
Ambient temperature	°C	5 to 50
Fluid temperature	°C	5 to 50
Lubrication		Not required
Degree of protection		Dust proof
Vibration resistance	m/s^2	50 or less
Shock resistance	m/s^2	300 or less
Atmosphere		Containing corrosive gas is impermissible

Electrical specifications

Item			
Rated voltage	V	24 DC	12 DC
Voltage fluctuation range		±10%	
Rated current	A*1	0.025 (0.029)	0.050 (0.058)
Power consumption	W*1	0.6 (0.7)	0.6 (0.7)
Thermal class		B	
Temperature rise	°C	50	

*1: The values inside the brackets are for cases with a lamp and surge suppressor.
*2: The power consumption for 6 VDC, 5 VDC will be 0.9 (1.0) W.

Individual specifications

Model No.			3MA0	3MB0
Port size	P/R port		M3	M3
	A port		ø4 barbed fitting	
Effective cross-sectional area *1		mm^2	P→A : 0.1, A→R : 0.15	
Response time *2		ms	10 or less	
Weight		g	18	

*1: The effective cross-sectional area is the value for the solenoid valve unit.
*2: Response time is the time required for the valve to turn on at a supply pressure of 0.5 MPa and without lubrication.
It depends on the pressure and the lubricant quality.

3-port direct acting valve (small pneumatic valve)

Individual wiring manifold M3MA0/M3MB0 Series

Common specifications

Item		M3M*-P7
Manifold method		Manifold integrated
Manifold		Common supply/common exhaust
Station No.		2 to 20 stations
Valve and operation		Direct acting poppet valve
Working fluid		Compressed air
Max. working pressure	MPa	0.7
Min. working pressure	MPa	0.00
Proof pressure	MPa	1.05
Ambient temperature	°C	5 to 50
Fluid temperature	°C	5 to 50
Lubrication		Not required
Degree of protection		Dust proof
Vibration resistance	m/s^2	50 or less
Shock resistance	m/s^2	300 or less
Atmosphere		Containing corrosive gas is impermissible

Electrical specifications

Item			
Rated voltage	V	24 DC	12 DC
Voltage fluctuation range		±10%	
Rated current	A*1	0.025 (0.029)	0.050 (0.058)
Power consumption	W*1	0.6 (0.7)	0.6 (0.7)
Thermal class		B	
Temperature rise	°C	50	

*1: The values inside the brackets are for cases with a lamp and surge suppressor.

Individual specifications

Item			3MA0	3MB0
Port size	P port		M5	
	A port		ø4 barbed fitting	M3, M5 ø4/ø6 barbed fitting
	R port		M5	
Effective cross-sectional area		*1 mm^2	P→A : 0.1, A→R : 0.15	
Response time	*2	ms	10 or less	

*1: The effective cross-sectional area is the value for the solenoid valve unit.
*2: Response time is the time required for the valve to turn on at a supply pressure of 0.5 MPa and without lubrication. It depends on the pressure and the lubricant quality.

Pilot operated 3, 4, 5-port pneumatic valve

Discrete 4KA/4KB Series

Common specifications

Item		4K*-P7
Valve and operation		Pilot operated soft spool valve
Working fluid		Compressed air
Max. working pressure	MPa	0.7
Min. working pressure	MPa	Refer to Individual specifications listed below
Proof pressure	MPa	1.05
Ambient temperature	°C	-5 to 50
Fluid temperature	°C	5 to 50
Lubrication		Not required
Degree of protection		Dust proof
Vibration resistance	m/s^2	50 or less
Shock resistance	m/s^2	300 or less
Atmosphere		Containing corrosive gas is impermissible

Electrical specifications

Item			3KA1/4K$^{A}_{B}$1	4K$^{A}_{B}$2
Rated voltage	V	AC	100, 200 (50/60 Hz)	
		DC	24	
Voltage fluctuation range			±10%	
Starting current	A	100 VAC	0.056/0.044	
		200 VAC	0.034/0.026	0.028/0.022
		24 VDC	0.028/0.022	
Holding current	A	100 VAC	0.075	
		200 VAC	0.017/0.013	0.014/0.011
		24 VDC	0.075	
Power consumption Value in ( ) with lamp	W	100 VAC	1.8/1.4 (1.8/1.5)	
		200 VAC	2.1/1.6 (2.2/1.7)	1.8/1.4 (1.8/1.5)
		24 VDC	1.8 (2.0)	
Thermal class			Class B molded coil	
Temperature rise	°C		40	80

Reference: 100, 200 VAC coils can be used with 110, 220 VAC 60 Hz.

Individual specifications

Item			3KA1	4KA1	4KA2	4KB1	4KB2
Min. working pressure MPa	2-position	Single	0.15	0.15	0.15	0.15	0.15
		Double			0.10		0.10
	3-position		-	0.20	0.20	0.20	0.20
Port size *1	P/A/B port		M5	M5	Rc1/8	Rc1/8	Rc1/8
	R1/R2 port		M5	M5	Rc1/8	Rc1/8	Rc1/4
Effective cross-sectional area *2 mm^2	2-position		3	3	12.5	4	14
	3-position		-	3	11.0	3	12
Response time *3 ms	2-position		30 or less	30 or less	30 or less	30 or less	30 or less
	3-position		-	60 or less	60 or less	60 or less	60 or less
Weight g	2-position	Single	90	90	145	120	230
		Double	150	150	215	180	305
	3-position		-	160	230	190	315

*1: For the port size of A/B ports, there are options other than those listed above.
*2: Effective cross-sectional area of 3 position P/A/B connection for 4KA1, 4KB1 is 2.5 mm^2.
*3: Response time is the time required for the valve to turn on at a supply pressure of 0.5 MPa and without lubrication. It depends on the pressure and the lubricant quality.

Pilot operated 3, 4, 5-port valve (pneumatic valve)

Individual wiring manifold M4KA/M4KB Series

Common specifications

Item		M4K*-P7
Manifold method		Manifold integrated
Manifold		Common supply, common exhaust
Station No.		2 to 20 stations
Valve and operation		Pilot operated soft spool valve
Working fluid		Compressed air
Max. working pressure	MPa	0.7
Min. working pressure	MPa	Refer to Individual specifications listed below
Proof pressure	MPa	1.05
Ambient temperature	°C	-5 to 50
Fluid temperature	°C	5 to 50
Lubrication		Not required
Degree of protection		Dust proof
Vibration resistance	m/s^2	50 or less
Shock resistance	m/s^2	300 or less
Atmosphere		Containing corrosive gas is impermissible

Electrical specifications

Item			4KB1	4K$^{A}_{B}$2
Rated voltage	V	AC	100, 200 (50/60 Hz)	
		DC	24	
Voltage fluctuation range			±10%	
Starting current	A	100 VAC	0.056/0.044	
		200 VAC	0.034/0.026	0.028/0.022
		24 VDC	0.028/0.022	
Holding current	A	100 VAC	0.075	
		200 VAC	0.017/0.013	0.014/0.011
		24 VDC	0.075	
Power consumption Value in ( ) with lamp	W	100 VAC	1.8/1.4 (1.8/1.5)	
		200 VAC	2.1/1.6 (2.2/1.7)	1.8/1.4 (1.8/1.5)
		24 VDC	1.8 (2.0)	
Thermal class			B	
Temperature rise	°C		40	80

Reference: 100, 200 VAC coils can be used with 110, 220 VAC 60 Hz.

Individual specifications

Item			4KA2	4KB1	4KB2
Min. working pressure MPa	2-position	Single	0.15	0.15	0.15
		Double	0.10		0.10
	3-position		0.20	0.20	0.20
Port size	P/A/B port		Rc1/8	Rc1/8	Rc1/8
	R1/R2 port		Rc1/8	Rc1/8	Rc1/4
Effective cross-sectional area *1 mm^2	2-position		12.5	4	14
	3-position		11.0	3	12
Response time *2 ms	2-position		30 or less	30 or less	30 or less
	3-position		60 or less	60 or less	60 or less

*1: Effective cross-sectional area of 3 position P/A/B connection for 4KB1 is 2.5 mm^2.
*2: Response time is the time required for the valve to turn on at a supply pressure of 0.5 MPa and without lubrication.
It depends on the pressure and the lubricant quality.

Auxiliary components

Miniature speed controller

SC-M3/M5-P7 Series

Specifications

Item		SC-M3-S	SC-M3-L	SC-M3-F	SC-M3-A	SC-M5-S	SC-M5-L	SC-M5-F	SC-M5-A
Working fluid		Compressed air							
Max. working pressure	MPa	0.7							
Min. working pressure	MPa	0.1							
Proof pressure	MPa	1.05							
Fluid temperature	°C	5 to 60							
Ambient temperature	°C	0 to 60 (no freezing)							
Port size		M3				M5			
Weight	g	1.7	1.5	2.4	2.4	5.6	4.8	7.9	8.5
Applicable cylinder bore size	mm	ø2.5 to ø10				ø6 to ø16			
Dial rotations (needle position)		10							
Free flow	Flow rate /min. (ANR)	20				53			
	Effective cross-sectional area mm^2	0.3				0.8			
Controlled flow	Flow rate /min. (ANR)	16				47			
	Effective cross-sectional area mm^2	0.25				0.7			

Note 1: Flow rate is the atmospheric pressure conversion at 0.49 MPa.

Introduction of available products

Page

Hand/rotary (Konsei Co., Ltd.)

Linear guide hand [LHAC] Ending 46

Slim long stroke linear guide hand [HLCC] Ending 50

Compact wide parallel hand [HMFC] Ending 52

Rack type miniature rotation actuator [ZRBC] Ending 54

Fitting/tube (Aoi Co., Ltd.)

Female fitting [MJ] Ending 56

Soft urethane tube [U-9200] Ending 62

Urethane tube [U-9500] Ending 63

eco-flex Ending 64

Linear guide hand clean series

LHAC Series

Konsei Inc.

Features

Hand to achieve high durability due to the machine's high speed

- High rigidity, high precision, and long service life because of integrated shape linear guide
- Long jaw is supported
- High precision and smooth operation are achieved because of cross roller guide

[Material]

Body	Aluminum
Guide part	SUS440C or equivalent
Bolts	SUS
Grease	Fluorine-based grease

* Contact CKD when using under special environment.

Specifications

Model No. / Descriptions		LHAC-01AS	LHAC-03AS	LHAC-04AS	LHAC-05AS	LHAC-06AS
Drive source	MPa	Air 0.1 - 0.7				
Lubrication		No lubrication				
Ambient temperature	°C	5 to 60				
Operational stroke length	mm	5	9	11	15	20
Cylinder diameter	mm	ø12	ø16	ø20	ø25	ø32
Rod diameter	mm	ø6	ø8	ø10	ø12	ø16
Volumetric capacity (reciprocating)	cm^3/time	0.32	1.58	2.89	6.32	14.07
Repeatability	mm	±0.01				
Product weight	kg	0.085	0.15	0.36	0.52	0.82

How to order

Standard ------- **LHAC-01AS**

Option ------- **LHAC - 01AS - NO - ET3S2** ---- The LHAC-01AS has 2 proximity switches and is Normally Open.

(Size: 01AS; Option: NO; Sensor/No. of pcs: ET3S2)

Size	
Code	
01AS	
03AS	
04AS	
05AS	

Option			
Code	Name	Code	Name
NO	Normally open		
NC	Normally closed		

Sensor/No. of pcs			
Code	Name	Code	Name
ET3	Proximity 3 cores	E24L *	Reed 2 cores
ET3L	Proximity 3 cores	E25 *	Reed 2 cores
ET2	Proximity 2 cores	E25L *	Reed 2 cores
ET2L	Proximity 2 cores	S1	1 Sensor
E24 *	Reed 2 cores	S2	2 Sensor

* 06AS only

Dimensions

● LHAC-006AS Standard/NO/NC (appropriate gripping power 5N to 11N)

* Dimensions in ( ) for NO (normally open) and NC (normally closed) specifications.

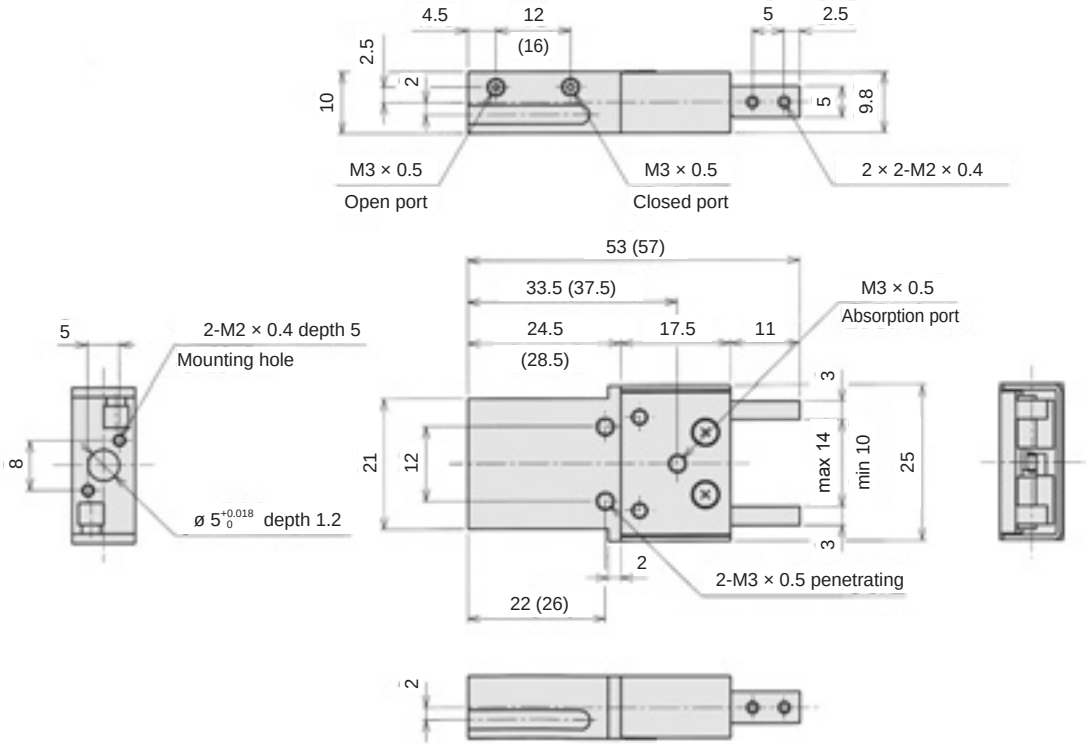

● LHAC-01AS Standard/NO/NC (appropriate gripping power 15N to 30N)

* Dimensions in ( ) for NC (normally closed) specifications.

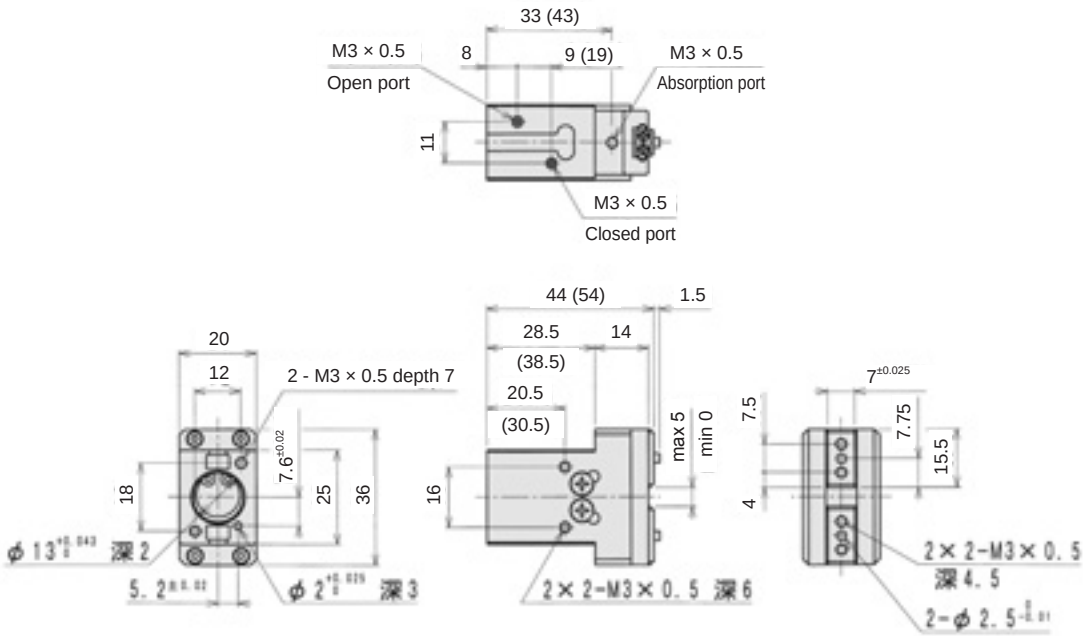

Dimensions

● LHAC-03AS Standard/NO/NC (appropriate gripping power 30N to 50N)

* Dimensions in ( ) for NC (normally closed) specifications.

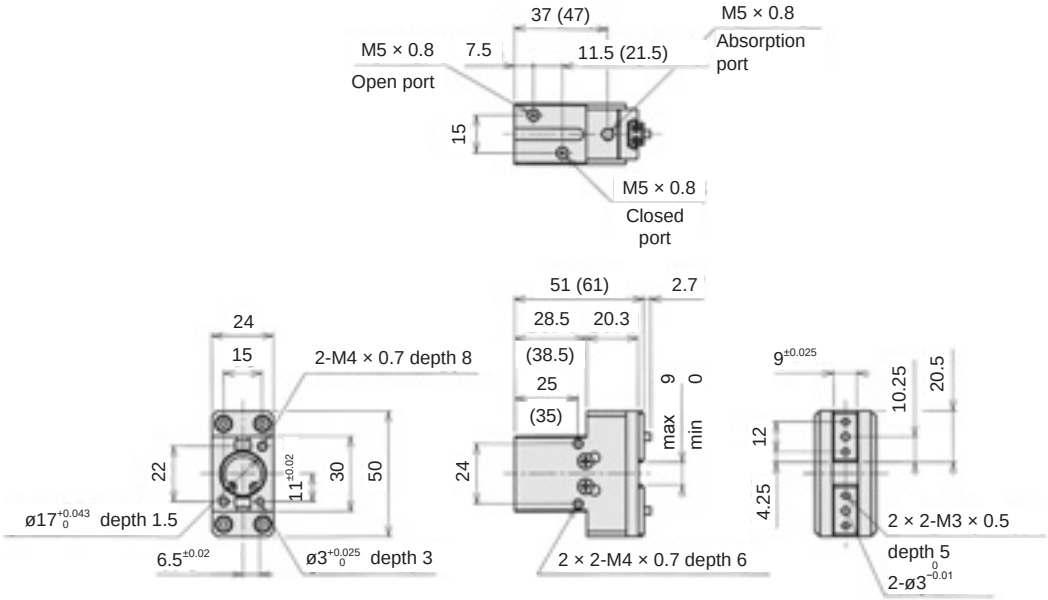

● LHAC-04AS Standard/NO/NC (appropriate gripping power 40N to 80N)

* Dimensions in ( ) for NC (normally closed) specifications.

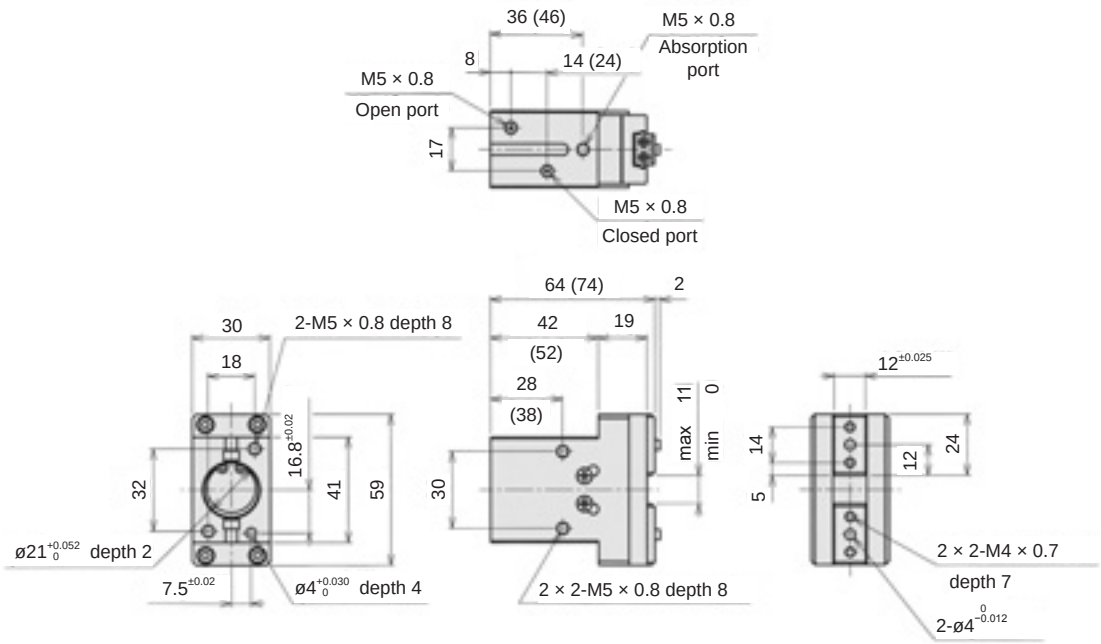

Ending

Dimensions

● LHAC-05AS Standard/NO/NC (appropriate gripping power 80N to 150N)

* Dimensions in ( ) for NC (normally closed) specifications.

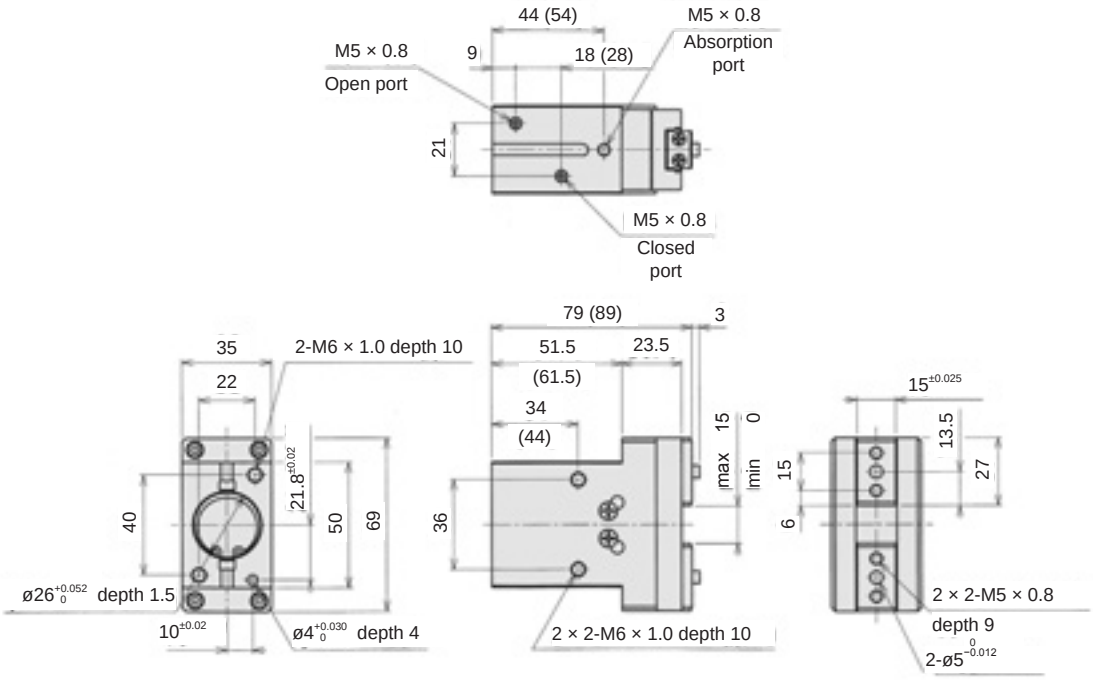

● LHAC-06AS Standard/NO/NC (appropriate gripping power 100N to 250N)

* Dimensions in ( ) for NO (normally open) and NC (normally closed) specifications.

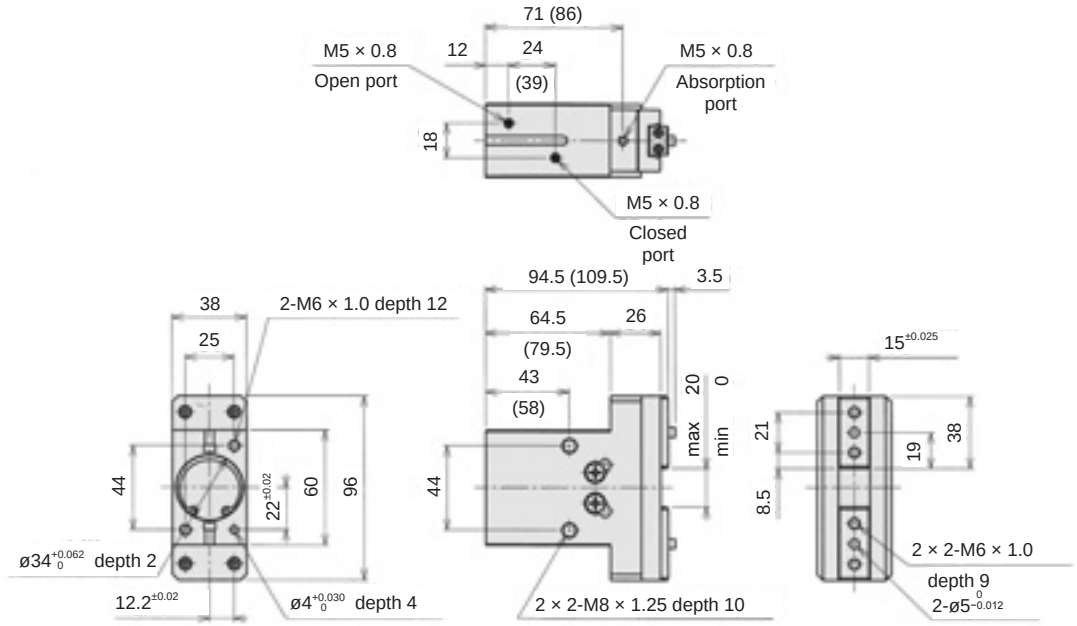

Slim long stroke linear guide hand clean series

HLCC Series

Konsei Inc.

Features

Slim long stroke of linear guide hand

- Slim, large open and close stroke length
  Slim/high torque double piston system.
- Durability has been increased with adopting linear guide
  High rigidity because of long guide pitch of linear guide.
- Rich variety for various specifications
  6 sizes, 11 stroke in total. Select in accordance with specifications.
- Front through hole for easy installation

[Material]

Body	Aluminum
Guide part	SUS440C or equivalent
Bolts	SCM (unichrome plating)
Grease	Fluorine-based grease

* Contact CKD when using under special environment.

Specifications

Model No. / Descriptions		HLCC-16AS	HLCC-20AS	HLCC-25AS	HLCC-30AS
Drive source	MPa	Air 0.2 to 0.7			
Lubrication		No lubrication or turbine oil type 1 (ISOVG32)			
Ambient temperature	°C	5 to 60			
Operational stroke length	mm	40	50	60	70
Cylinder diameter	mm	ø16 × 2	ø20 × 2	ø25 × 2	ø30 × 2
Volumetric capacity (reciprocating)	cm^3/time	16.1	31.4	58.9	99.0
Repeatability	mm	±0.01			
Product weight	kg	0.71	1.03	1.62	2.74
Option		Open and close check sensor			

How to order

Standard ------- **HLCC-16AS**

Option ------- **HLCC - 16AS - ET3LS2** ------- 2 proximity switches are attached to HLCC-16AS.

(Size: 16AS; Sensor/No. of pcs: ET3LS2)

Size	
Code	
16AS	
20AS	
25AS	
30AS	

Sensor/No. of pcs			
Code	Name	Code	Name
ET3	Proximity 3 cores	E24L*	Reed 2 cores
ET3L	Proximity 3 cores	E25*	Reed 2 cores
ET2	Proximity 2 cores	E25L*	Reed 2 cores
ET2L	Proximity 2 cores	S1	1 Sensor
E24*	Reed 2 cores	S2	2 Sensor

* 30AS only

Dimensions

● HLCC-16AS/20AS/25AS/30AS standard (appropriate gripping power 80N to 550N)

* Dimensions in ( ) for NC (normally closed) specifications.

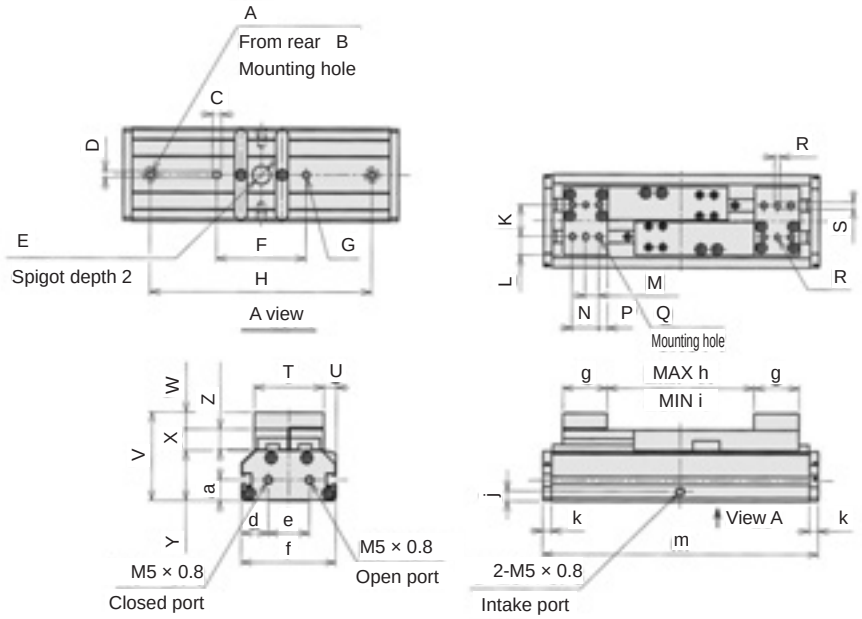

Model \ Dimensions	A	B	C	D	E	F	G	H	J
HLCC-16AS	2-M5 penetrating	ø8 spot facing depth 4.4	5	$4^{+0.03}_{0}$ depth 4	$ø10^{+0.036}_{0}$	50	$ø4^{+0.03}_{0}$ depth 4	86	$3^{+0.02}_{0}$ depth 4
HLCC-20AS	2-M6 penetrating	ø9.5 spot facing depth 5.4	5	$4^{+0.03}_{0}$ depth 4	$ø12^{+0.043}_{0}$	60	$ø4^{+0.03}_{0}$ depth 4	102	$3^{+0.02}_{0}$ depth 4
HLCC-25AS	2-M8 penetrating	ø11 spot facing depth 6.5	6	$5^{+0.03}_{0}$ depth 5	$ø15^{+0.043}_{0}$	80	$ø5^{+0.03}_{0}$ depth 5	122	$4^{+0.03}_{0}$ depth 4
HLCC-30AS	2-M8 penetrating	ø11 spot facing depth 6.5	7	$6^{+0.036}_{0}$ depth 6	$ø18^{+0.052}_{0}$	90	$ø6^{+0.036}_{0}$ depth 6	144	$4^{+0.03}_{0}$ depth 4

Model \ Dimensions	K	L	M	N	P	Q	R	S	T	U	V	W	X
HLCC-16AS	18	10.5	7.5	15	5	2 × 4-M4 depth 9	$ø3^{+0.02}_{0}$ depth 4	4	39	7	50	9.5	12
HLCC-20AS	19	12.5	10	20	5	2 × 4-M4 depth 9	$ø3^{+0.02}_{0}$ depth 4	4	44	9	54	9.5	12
HLCC-25AS	24	14	14.5	29	5	2 × 4-M5 depth 11	$ø4^{+0.03}_{0}$ depth 4	5	52	10.5	63.5	11.5	14.5
HLCC-30AS	28	18	15	30	8	2 × 4-M6 depth 13	$ø4^{+0.03}_{0}$ depth 4	5	64	11	73.5	14.5	16.5

Model \ Dimensions	Y	Z	a	b	e	f	g	h	i	j	k	m
HLCC-16AS	28.5	11.5	12	15	23	53	25	42	2	5.5	5	116
HLCC-20AS	32.5	11.5	14	17	28	62	30	52	2	6.5	5	132
HLCC-25AS	37.5	14	15	19	35	73	39	62	2	7	5	152
HLCC-30AS	42.5	16	17	21.5	43	86	47	72	2	6	5	174

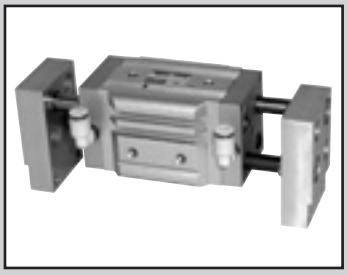

Compact wide parallel hand clean series

HMFC Series

Konsei Inc.

Features

Wide parallel hand with less total height and wide range of combined use

- Small/lightweight/compact
  With less total height, you can efficiently use limited space.
  Body is designed simple and compact.
- High gripping power
  High gripping power is achieved with double piston system.
- Both big/small works are supported with long stroke length
  Jaw's operational stroke length is long, so no need to adjust for double purpose.

[Material]

Body	Aluminum
Guide rod	SUS303
Bolts	SUS
Grease	Fluorine-based grease

* Contact CKD when using under special environment.

Specifications

Model No. / Descriptions		HMFC-16AS	HMFC-20AS
Drive source	MPa	Air 0.3 to 0.7	
Lubrication		No lubrication or turbine oil type 1 (ISOVG32)	
Ambient temperature	°C	5 to 60	
Operational stroke length	mm	30	40
Cylinder diameter	mm	ø16 × 2	ø20 × 2
Rod diameter	mm	ø8	ø10
Volumetric capacity (reciprocating)	cm^3/time	9.05	18.8
Repeatability	mm	±0.1	
Product weight	kg	0.54	0.9

How to order

Standard ------- **HMFC-16AS**

Option ------- **HMFC - 16AS - ET3S2** ------- 2 proximity switches are attached to HMFC-16AS.

Size — Sensor/No. of pcs

Size	
Code	
16AS	
20AS	

Sensor/No. of pcs			
Code	Name	Code	Name
ET3	Proximity 3 cores	E25	Reed 2 cores
ET3L	Proximity 3 cores	E25L	Reed 2 cores
ET2	Proximity 2 cores	S1	1 Sensor
ET2L	Proximity 2 cores	S2	2 Sensor
E24	Reed 2 cores		
E24L	Reed 2 cores		

Dimensions

● HMFC-16AS/20AS standard (appropriate gripping power 80N to 250N)

* Dimensions in ( ) for NC (normally closed) specifications.

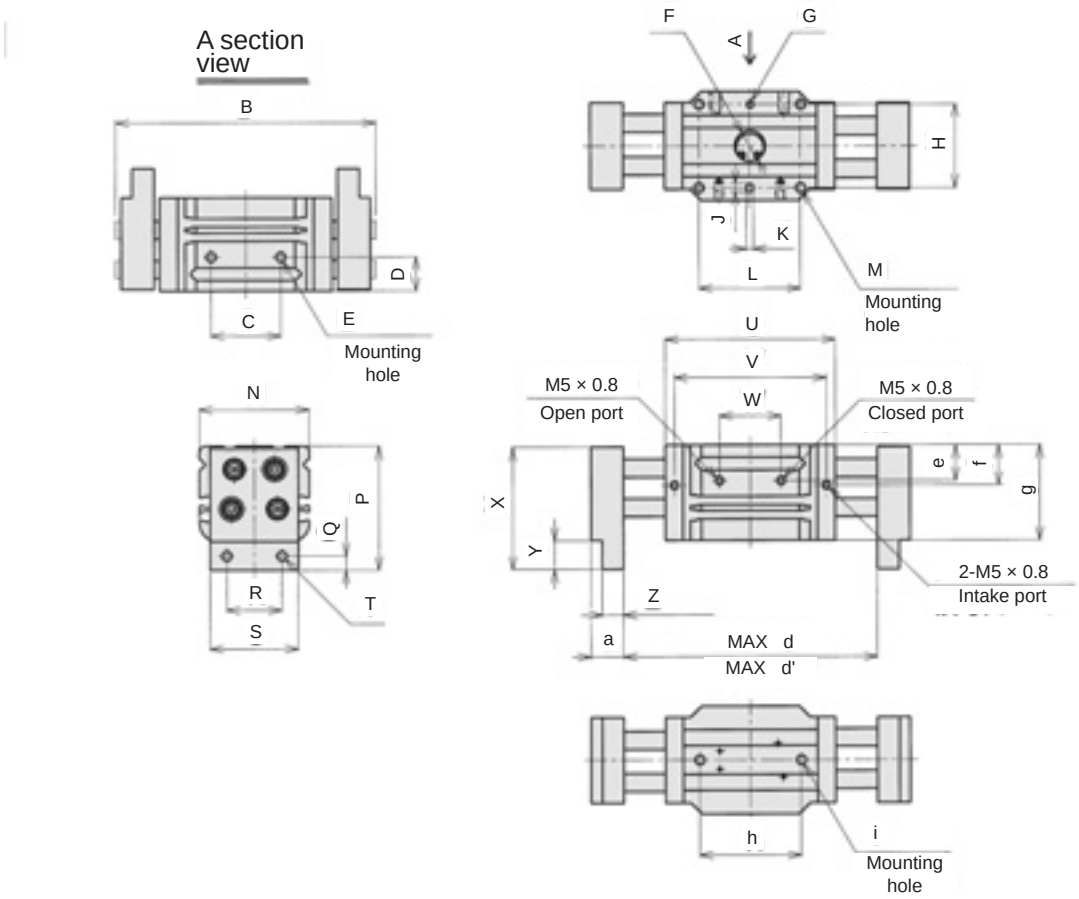

Model \ dimensions	B	C	D	E	F	G	H	J	K
HMFC-16AS	116	28	15	2-M5 × 0.8 depth 7	ø17$^{+0.034}_{0.016}$ depth 1.85	ø3$^{+0.025}_{0}$ depth 3	36	4	3$^{+0.025}_{0}$ depth 3
HMFC-20AS	137	38	19	2-M6 × 1.0 depth 10	ø17$^{+0.034}_{0.016}$ depth 1.85	ø4$^{+0.03}_{0}$ depth 4	46	5	4$^{+0.03}_{0}$ depth 4

Model \ dimensions	L	M	N	P	Q	R	S	T	U	V	W
HMFC-16AS	38	4-M5 × 0.8 depth 10	50	58	5	28	38	2 × 2-M5 × 0.8	80	70	24
HMFC-20AS	56	4-M6 × 1.0 depth 12	60	68	8	30	48	2 × 2-M6 × 1.0	94	84	34

Model \ dimensions	X	Y	K	a	d	d'	e	f	g	h	i
HMFC-16AS	57	14	13$^{0}_{-0.1}$	15	116	86	15	20.5	44	38	2-M5 × 0.8 depth 8
HMFC-20AS	67	16	12$^{0}_{-0.1}$	18	140	100	19	21.5	52	56	2-M6 × 1.0 depth 12

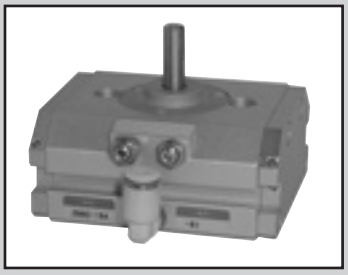

Rack type miniature rotation actuator clean series

ZRBC Series

Konsei Inc.

Features

Rack type miniature rotation actuator

- Air leak is cut by rack type
- 40% less size is required than vane type to achieve space saving
- "Stopper" "piping", and "sensor" are integrated on single aspect
- Through hole to enable installing from 2 directions
- Positioning pin hole for easy picking core when installing the body

[Material]

Body	Aluminum
Rotation shaft	SUS303
Bolts	SUS
	SCM (unichrome plating)
Grease	Fluorine-based grease

* Contact CKD when using under special environment.

Specifications

Model No. / Descriptions				ZRBC-16A	ZRBC-20A	ZRBC-25A	ZRBC-30A
Drive source			MPa	Air 0.15 (≈22psi, 1.5bar) to 0.7			
Lubrication				No lubrication or turbine oil type 1 (ISOVG32)			
Ambient temperature			°C	5 to 60			
Rotation time				0.1 to 1.5 S/90°			
Rotation angle				90°/180°			
Cylinder diameter			mm	ø16 × 2	ø20 × 2	ø25 × 2	ø30 × 2
Reverse torque			Nm-theoretical value	1.72 × P	3.40 × P	6.36 × P	11.12 × P
Allowable load	Radial	N	Fr	29.2	59	84	127
	Thrust	N	Fsa	14.6	29.5	42	63.5
	Thrust	N	Fsb	14.6	29.5	42	73
	Moment	N·m	M	0.715	1.68	2.69	4.70
Allowed kinetic energy		J	Standard	0.0146	0.0307	0.0479	0.0751
			Absorber supported	0.68	0.68	0.68	0.68
Product weight		g	R1	232	356	572	840
			R2	266	444	726	1088

How to order

Standard -------- **ZRBC-16A**

Option -------- **ZRBC - 16A - R1 - ET3S2 - Z** -------- 2 proximity switches are attached to ZRBC-16A, with special processing.

(Size: 16A; Angle: R1; Sensor/No. of pcs: ET3S2; Option: Z)

Size	
Code	
16A	
20A	
25A	
30A	

Angle	
Code	Specifications
R1	90°
R2	180°

Sensor/No. of pcs			
Code	Name	Code	Name
ET3	Proximity 3 cores	E24L *	Reed 2 cores
ET3L	Proximity 3 cores	E25 *	Reed 2 cores
ET2	Proximity 2 cores	E25L *	Reed 2 cores
ET2L	Proximity 2 cores	S1	1 Sensor
E24 *	Reed 2 cores	S2	2 Sensor

* 30AS only

Option	
Code	Name
Z	Special specifications

Dimensions

● ZRBC-16A/20A/25A/30A standard (rotating movement torque 0.86 Nm to 5.56 Nm)

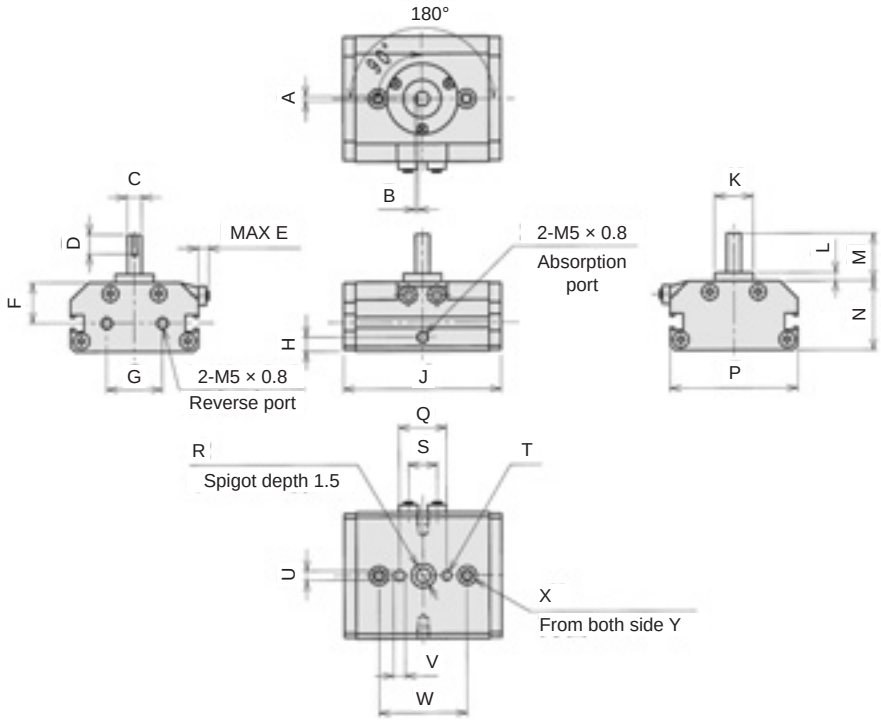

Model \ dimensions	A	B	C	D	E	F	G	H	J	K	L	M
ZRBC-16A	$2^{+0.025}_{0}$	$1.2^{+0.1}_{0}$	$ø6^{0}_{-0.015}$	8	5	17	23	5	66 (55)	$ø16^{0}_{-0.043}$	3.5	20
ZRBC-20A	$3^{+0.025}_{0}$	$1.8^{+0.1}_{0}$	$ø8^{0}_{-0.015}$	8.5	7	19	28	6	80 (62)	$ø20^{0}_{-0.052}$	4.5	23
ZRBC-25A	$4^{+0.03}_{0}$	$2.5^{+0.1}_{0}$	$ø10^{0}_{-0.015}$	12	8	23	35	7	98 (74)	$ø26^{0}_{-0.052}$	3	25
ZRBC-30A	$4^{+0.03}_{0}$	$2.5^{+0.1}_{0}$	$ø12^{0}_{-0.015}$	14	7	26	43	6	106 (78)	$ø28^{0}_{-0.052}$	4	28

Model \ dimensions	N	P	Q	R	S	T	U	V	W	X	Y
ZRBC-16A	29	53	20	$ø10^{+0.032}_{0}$	12	$ø4^{+0.03}_{0}$ depth 4	$4^{+0.03}_{0}$ depth 4	5	37	2-M5 penetrating	ø8 spot facing depth 4.4
ZRBC-20A	33	62	22	$ø12^{+0.043}_{0}$	14	$ø4^{+0.03}_{0}$ depth 4	$4^{+0.03}_{0}$ depth 4	5	40	2-M6 penetrating	ø9.5 spot facing depth 5.4
ZRBC-25A	38	73	30	$ø15^{+0.043}_{0}$	17	$ø5^{+0.03}_{0}$ depth 5	$5^{+0.03}_{0}$ depth 5	6	52	2-M8 penetrating	ø11 spot facing depth 6.5
ZRBC-30A	43	86	30	$ø18^{+0.052}_{0}$	19	$ø6^{+0.036}_{0}$ depth 6	$6^{+0.036}_{0}$ depth 6	7	56	2-M8 penetrating	ø11 spot facing depth 6.5

* Dimensions in ( ) is 90° specifications

MJ

Female fitting/fitting

Port size 1/8 to 1/2 (Rc or R)

● Reliable fitting with stable and secure piping enabled by double chucking mechanism

Aoi Co., Ltd.

Tightening fitting MJ Series

■ Straight

Single straight/ MJS□-□-P80	Straight/ MJS□-0-P80	Female/straight/ MJS□-□-M-P80	Bulk head/ MJS□-0-X-P80	Bulkhead female/ MJS□-□-E-P80
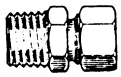		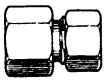	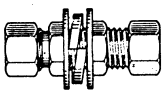	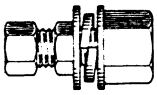
Applicable tube O.D. ø	Applicable tube O.D. ø	Applicable tube O.D. ø	Applicable tube O.D. ø	Applicable tube O.D. ø
4	4	4	4	4
6	6	6	6	6
8	8	8	8	8
10	10	10	10	10
12	12	12	12	12
15	15	15	15	
• Page: Ending 62	• Page: Ending 62	• Page: Ending 62	• Page: Ending 62	• Page: Ending 63

■ Elbow

Single elbow/ MJL□-□-P80	Elbow/ MJL□-0-P80	Female/elbow/ MJL□-□-M-P80	Turn elbow/ MJL□-□-T-P80
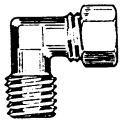	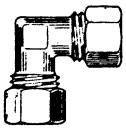	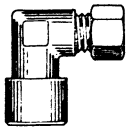	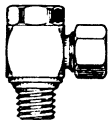
Applicable tube O.D. ø	Applicable tube O.D. ø	Applicable tube O.D. ø	Applicable tube O.D. ø
4	4	4	4
6	6	6	6
8	8	8	8
10	10	10	10
12	12	12	12
15	15		15
• Page: Ending 63	• Page: Ending 63	• Page: Ending 63	• Page: Ending 64

■ Tee

Both ports tee/ MJT□-□-P80
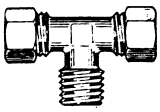
Applicable tube O.D. ø
4
6
8
10
12
15
• Page: Ending 64

D tee/ MJT□-□-D-P80	Tee/ MJT□-0-P80	Female/tee/ MJT□-□-M-P80	Sleeve/ MJN□-0-P80	Insert ring/ MJU□-0-P80
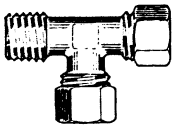	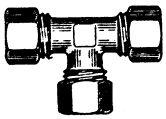	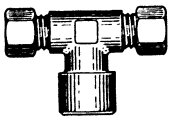		
Applicable tube O.D. ø	Applicable tube O.D. ø	Applicable tube O.D. ø	Applicable tube O.D. ø	Applicable tube O.D. ø
4	4	4	4	4
6	6	6	6	6
8	8	8	8	8
10	10	10	10	10
12	12	12	12	12
15	15		15	
• Page: Ending 64	• Page: Ending 64	• Page: Ending 65	• Page: Ending 65	• Page: Ending 65

● Sales unit is 10 pcs./1 bag

Specifications

Descriptions	MJ
Working fluid	Compressed air
Max. working pressure MPa	1.0
Operating ambient temperature °C	-10 to 60 (no freezing)
Applicable tube	Urethane tube (U-92**, U-95**) Note
Surface treatment	Nickeling treatment (sleeve included)

Note: Refer to Ending 66 and 67 for tube dimensions, ambient temperature and working pressure.

How to order

MJ - S 4 - 6 - M - P80

* Refer to model No. selections in dimensions (Ending 62 to 65) for combination of model No.

Ⓐ Shape

Ⓐ Shape	
S	Straight
L	Elbow
T	Tee
N	Sleeve
U	Insert ring

Ⓑ Applicable tube O.D.

Ⓑ Applicable tube O.D.	
4	ø4
6	ø6
8	ø8
10	ø10
12	ø12
15	ø15

Ⓒ Piping size

Ⓒ Piping size	
6	$R^1/_8$
8	$R^1/_4$
10	$R^1/_8$
15	$R^1/_2$
0	No thread

Ⓓ Other combination

Ⓓ Other combination	
D	D type
E	Bulkhead female
M	Female
T	Turn
X	Bulk head

Ⓔ Clean room specifications

Ⓔ Clean room specifications	
	Treatment
P80	Oil-prohibited

Note: R is the same as old PT.

Safety precautions

- Use urethane tube with insert ring, if the using temperature is high. (refer to Ending 65) If using without insert ring, tube might be dropped from fitting.
- If a tube is used where a tube moves frequently, troubles may occur. So, avoid use in such place.

Mounting and removal

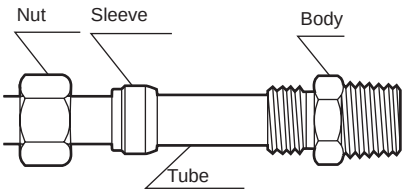

(1) As shown in the figure, put the nut and sleeve on plastic tube, then insert the tube until hitting the chucking guide (tube end). Then tighten the nut manually.
(2) Then tighten it with a spanner. Appropriate fastening rotation is 1 $^3/_4$ rotation for plastic tube.
(3) Cut the tube as right angle as possible, please eliminate burr and foreign matter, etc.
(4) For temporally tightening, turn should be $^1/_4$ turn less than applicable tightening turn, while to tighten securely, tighten $^1/_4$ turn more. For re-tightening, also $^1/_4$ turn more.

Dimensions: Single straight/straight/female straight/bulkhead

● Single straight/MJS□-□-P80

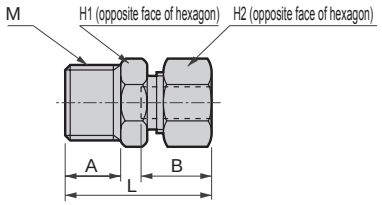

* L and B dimensions show rough dimensions before fixing nut.

Model No.	Applicable tube O.D. ø	M	H_1	H_2	L	A	B	Min. bore size	Effective cross-sectional area (mm²)	Weight g
MJS4-6	4	$R^1/_8$	10	10	22.5	8	11	3	4.1	10
MJS4-8	4	$R^1/_4$	14	10	26	11	11	3	3.9	14
MJS6-6	6	$R^1/_8$	10	12	23.5	8	11.5	4.5	7.9	12
MJS6-8	6	$R^1/_4$	14	12	27	11	11.5	4.5	7.8	19
MJS6-10	6	$R^3/_8$	17	12	28.5	12	11.5	4.5	7.9	29
MJS8-6	8	$R^1/_8$	12	14	25.5	8	13	6	19.5	16
MJS8-8	8	$R^1/_4$	14	14	28.5	11	13	6	20.1	21
MJS8-10	8	$R^3/_8$	17	14	30	12	13	6	19.5	31
MJS10-8	10	$R^1/_4$	14	17	30.5	11	14.5	8	36.1	26
MJS10-10	10	$R^3/_8$	17	17	31.5	12	14.5	8	36.1	35
MJS10-15	10	$R^1/_2$	22	17	34.5	15	14.5	8	36.1	53
MJS12-8	12	$R^1/_4$	16	19	32	11	16	9	57.8	32
MJS12-10	12	$R^3/_8$	17	19	33	12	16	10	55.5	38
MJS12-15	12	$R^1/_2$	22	19	36	15	16	10	57.8	56
MJS15-10	15	$R^3/_8$	20	23	37	12	19	12	113.3	52
MJS15-15	15	$R^1/_2$	23	23	40	15	19	12	115.2	72

Model numbers above omit "Clean room specifications" number.

● Straight/MJS□-0-P80

(Sales unit is 10 pcs./1 bag)

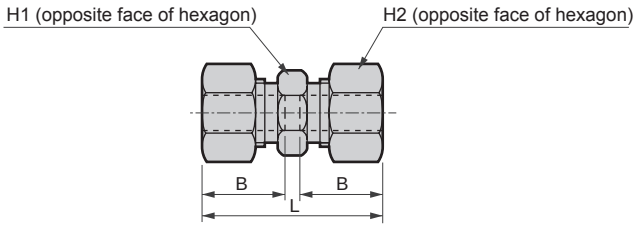

* L and B dimensions show rough dimensions before fixing nut.

Model No.	Applicable tube O.D. ø	H_1	H_2	L	B	Min. bore size	Effective cross-sectional area (mm²)	Weight g
MJS4-0	4	8	10	25.5	11	3	4.3	12
MJS6-0	6	10	12	27.5	11.5	4.5	8.1	17
MJS8-0	8	12	14	31	13	6	25.2	23
MJS10-0	10	14	17	34	14.5	8	43.2	35
MJS12-0	12	16	19	37	16	10	68.6	44
MJS15-0	15	20	23	44	19	12	106.0	78

Model numbers above omit "Clean room specifications" number.

● Female/straight/MJS□-□-M-P80

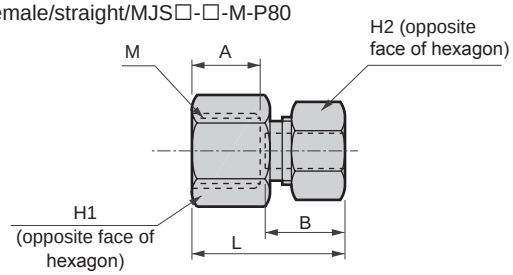

* L and B dimensions show rough dimensions before fixing nut.

Model No.	Applicable tube O.D. ø	M	H_1	H_2	L	A	B	Min. bore size	Effective cross-sectional area (mm²)	Weight g
MJS4-6-M	4	$R^1/_8$	13	10	20	8	11	3	4.0	12
MJS4-8-M	4	$R^1/_4$	17	10	23	11	11	3	4.8	21
MJS6-6-M	6	$R^1/_8$	13	12	21	8	11.5	4.5	8.1	14
MJS6-8-M	6	$R^1/_4$	17	12	24	11	11.5	4.5	8.6	22
MJS6-10-M	6	$R^3/_8$	20	12	25	12	11.5	4.5	14.4	27
MJS8-6-M	8	$R^1/_8$	13	14	22.5	8	13	6	15.1	17
MJS8-8-M	8	$R^1/_4$	17	14	25.5	11	13	6	20.1	25
MJS8-10-M	8	$R^3/_8$	20	14	26.5	12	13	6	25.1	29
MJS10-8-M	10	$R^1/_4$	17	17	27	11	14.5	8	36.1	30
MJS10-10-M	10	$R^3/_8$	20	17	28	12	14.5	8	34.4	34
MJS10-15-M	10	$R^1/_2$	26	17	31	15	14.5	8	34.4	60
MJS12-8-M	12	$R^1/_4$	17	19	28.5	11	16	10	55.2	34
MJS12-10-M	12	$R^3/_8$	20	19	29.5	12	16	10	55.5	39
MJS12-15-M	12	$R^1/_2$	26	19	33	15	16	10	55.5	63
MJS15-10-M	15	$R^3/_8$	20	23	33	12	19	12	73.7	52
MJS15-15-M	15	$R^1/_2$	26	23	36	15	19	12	103.3	76

Model numbers above omit "Clean room specifications" number.

● Bulk head/MJS□-0-X-P80

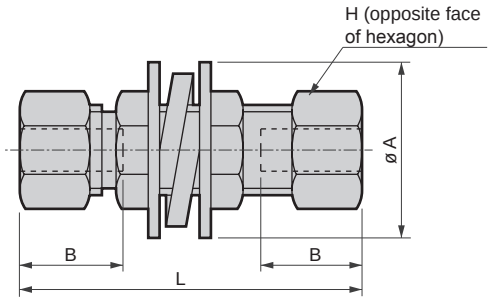

* L and B dimensions show rough dimensions before fixing nut. Mounting plate thickness 4 mm or less

Model No.	Applicable tube O.D. ø	H	L	B	Mounting hole diameter	Min. bore size	Effective cross-sectional area (mm²)	A	Weight g
MJS4-0-X	4	10	39	11	9	3	3.9	18	25
MJS6-0-X	6	12	43	11.5	11	4.5	7.7	22	26
MJS8-0-X	8	14	47	13	13	6	25.9	24	49
MJS10-0-X	10	17	51	14.5	15	8	41.1	28	59
MJS12-0-X	12	19	54	16	17	10	67.6	32	100
MJS15-0-X	15	23	63	19	21	12	97.0	40	176

Model numbers above omit "Clean room specifications" number.

Dimensions: Bulkhead female/single elbow/female/elbow/elbow

● Bulkhead female/MJS□-□-E-P80

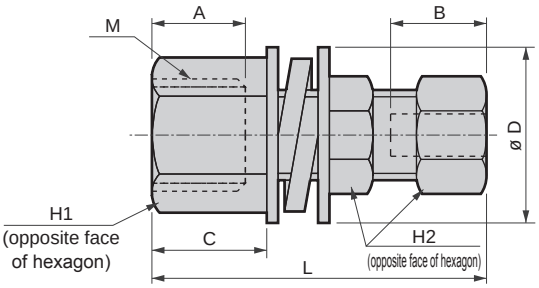

* L and B dimensions show rough dimensions before fixing nut. Mounting plate thickness 4 mm or less

	Model No.	Applicable tube O.D. ø	M	H_1	H_2	L	A	B	C	Mounting hole diameter	Min. bore size	Effective cross-sectional area (mm^2)	D	Weight g
★	MJS4-6-E	4	$RC^1/_8$	12	10	34	8	11	9.5	9	3	5.2	18	23
	MJS6-8-E	6	$RC^1/_4$	17	12	40	11	11.5	13	11	4.5	13.2	22	42
	MJS8-8-E	8	$RC^1/_4$	17	14	42.5	11	13	13	13	6	25.6	24	51
★	MJS10-10-E	10	$RC^3/_8$	20	17	45.5	12	14.5	14	15	8	40.1	28	70

Model No. with ★ is available as custom order. Contact CKD.
Model numbers above omit "Clean room specifications" number.

● Single elbow/MJL□-□-P80

(Sales unit is 10 pcs./1 bag)

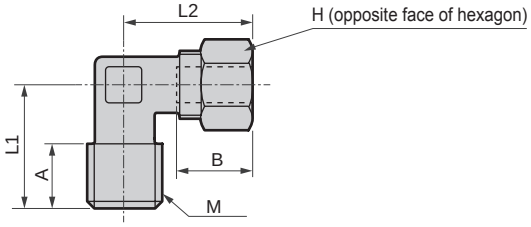

* L2 and B dimensions show rough dimensions before fixing nut.

Model No.	Applicable tube O.D. ø	M	H	L_1	L_2	A	B	Min. bore size	Effective cross-sectional area (mm^2)	Weight g
MJL4-6	4	$R^1/_8$	10	17	20	8	11	3	3.7	19
MJL4-8	4	$R^1/_4$	10	20	20	11	11	3	4.0	23
MJL6-6	6	$R^1/_8$	12	17	20.5	8	11.5	4.5	7.8	21
MJL6-8	6	$R^1/_4$	12	20	20.5	11	11.5	4.5	7.8	25
MJL6-10	6	$R^3/_8$	12	24	23.5	12	11.5	4.5	8.1	39
MJL8-6	8	$R^1/_8$	14	18	23	8	13	6	18.1	25
MJL8-8	8	$R^1/_4$	14	21	23	11	13	6	16.8	31
MJL8-10	8	$R^3/_8$	14	24	25	12	13	6	18.5	40
MJL10-8	10	$R^1/_4$	17	23	26.5	11	14.5	8	31.4	36
MJL10-10	10	$R^3/_8$	17	24	26.5	12	14.5	8	31.4	44
MJL10-15	10	$R^1/_2$	17	28	28.5	15	14.5	8	32.8	66
MJL12-8	12	$R^1/_4$	19	24	29	11	16	9	46.6	46
MJL12-10	12	$R^3/_8$	19	25	29	12	16	10	48.1	51
MJL12-15	12	$R^1/_2$	19	28	29	15	16	10	49.8	67
MJL15-10	15	$R^3/_8$	23	26	34	12	19	12	88.3	72
MJL15-15	15	$R^1/_2$	23	29	34	15	19	12	92.2	90

Model numbers above omit "Clean room specifications" number.

● Female/elbow/MJL□-□-M-P80

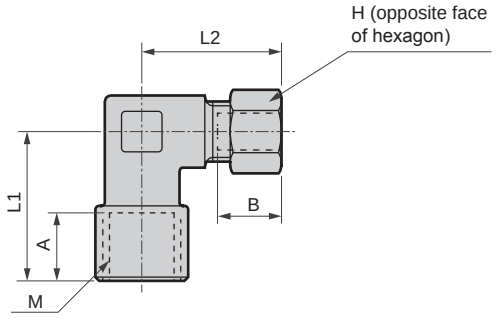

* L2 and B dimensions show rough dimensions before fixing nut.

	Model No.	Applicable tube O.D. ø	M	H	L_1	L_2	A	B	Min. bore size	Effective cross-sectional area (mm^2)	Weight g
★	MJL4-6-M	4	$RC^1/_8$	10	18.5	20	8	11	3	4.1	21
★	MJL4-8-M	4	$RC^1/_4$	10	24	22.5	11	11	3	4.7	33
	MJL6-6-M	6	$RC^1/_8$	12	18.5	20.5	8	11.5	4.5	9.4	22
	MJL6-8-M	6	$RC^1/_4$	12	24	23.5	11	11.5	4.5	12.8	34
★	MJL6-10-M	6	$RC^3/_8$	12	27	25.5	12	11.5	4.5	13.6	52
★	MJL8-6-M	8	$RC^1/_8$	14	19.5	23	8	13	6	13.6	29
	MJL8-8-M	8	$RC^1/_4$	14	24	25	11	13	6	21.0	36
★	MJL8-10-M	8	$RC^3/_8$	14	27	27	12	13	6	22.8	52
★	MJL10-8-M	10	$RC^1/_4$	17	24	26.5	11	14.5	8	29.3	40
★	MJL10-10-M	10	$RC^3/_8$	17	27	28.5	12	14.5	8	35.7	55
★	MJL12-8-M	12	$RC^1/_4$	19	25	29	11	16	10	29.3	49
★	MJL12-10-M	12	$RC^3/_8$	19	27	29	12	16	10	51.4	56

Model No. with ★ is available as custom order. Contact CKD.
Model numbers above omit "Clean room specifications" number.

● Elbow/MJL□-0-P80

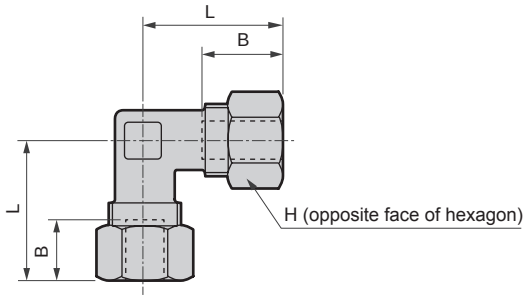

* L and B dimensions show rough dimensions before fixing nut.

Model No.	Applicable tube O.D. ø	H	L	B	Min. bore size	Effective cross-sectional area (mm^2)	Weight g
MJL4-0	4	10	20	11	3	3.6	21
MJL6-0	6	12	20.5	11.5	4.5	9.4	24
MJL8-0	8	14	23	13	6	20.7	32
MJL10-0	10	17	26.5	14.5	8	33.1	44
MJL12-0	12	19	29	16	10	49.5	57
MJL15-0	15	23	34	19	12	85.4	99

Model numbers above omit "Clean room specifications" number.

Dimensions: Turn elbow/double tee/D tee/tee

● Turn elbow/MJL□-□-T

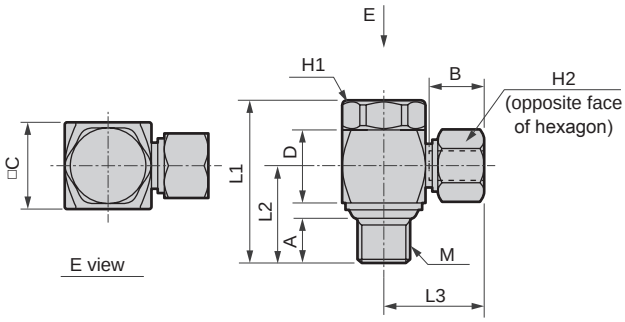

* L3 and B dimensions show rough dimensions before fixing nut.

Model No.	Applicable tube O.D. ø	M	H_1	H_2	L_1	L_2	L_3	A	B	C	D	Effective cross-sectional area (mm²)	Weight g
MJL4-6-T	4	RC1/8	14	10	29.5	17.6	18	8	11	15	13.5	3.9	37
MJL6-6-T	6	RC1/8	14	12	29.5	17.6	19	8	11.5	15	13.5	8.3	37
MJL6-8-T	6	RC1/4	19	12	36.5	22.1	21.5	11	11.5	20	16.5	9.7	70
MJL8-6-T	8	RC1/8	14	14	29.5	20.5	20.5	8	13	15	13.5	13.7	68
MJL8-8-T	8	RC1/4	19	14	36.5	23	23	11	13	20	16.5	18.0	72
MJL10-8-T	10	RC1/4	19	17	36.5	24.5	24.5	11	14.5	20	16.5	27.4	78
MJL10-10-T	10	RC3/8	22	17	42	26.5	26.5	12	14.5	24	20	33.9	127
MJL12-10-T	12	RC3/8	22	19	42	28	28	12	16	24	20	42.4	128
MJL12-15-T	12	RC1/2	24	19	52.5	29.5	29.5	15	16	27	27	45.5	198
MJL15-15-T	15	RC1/2	24	23	52.5	32.5	32.5	15	19	27	27	64.5	212

Model numbers above omit "Clean room specifications" number.

● D tee/MJT□-□-D

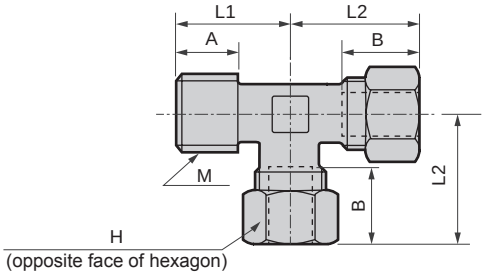

* L and B dimensions show rough dimensions before fixing nut.

Model No.	Applicable tube O.D. ø	M	H	L_1	L_2	A	B	Min. bore size	Effective cross-sectional area (mm²)	Weight g
MJT4-6-D	4	R1/8	10	17	20	8	11	3	7.6	25
MJT4-8-D	4	R1/4	10	20	20	11	11	3	7.8	30
MJT6-6-D	6	R1/8	12	17	20.5	8	11.5	4.5	13.1	27
MJT6-8-D	6	R1/4	12	20	20.5	11	11.5	4.5	15.7	34
MJT6-10-D	6	R3/8	12	24	23.5	12	11.5	4.5	14.4	51
MJT8-6-D	8	R1/8	14	18	23	8	13	6	27.3	38
MJT8-8-D	8	R1/4	14	21	23	11	13	6	28.9	43
MJT8-10-D	8	R3/8	14	24	25	12	13	6	36.1	54
MJT10-8-D	10	R1/4	17	23	26.5	11	14.5	8	48.1	88
MJT10-10-D	10	R3/8	17	24	26.5	12	14.5	8	49.8	62
MJT10-15-D	10	R1/2	17	28	28.5	15	14.5	8	68.1	87
MJT12-8-D	12	R1/4	19	24	29	11	16	10	65.6	68
MJT12-10-D	12	R3/8	19	25	29	12	16	10	76.0	68
MJT12-15-D	12	R1/2	19	28	29	15	16	10	80.3	90
MJT15-10-D	15	R3/8	23	26	34	12	19	12	110.4	110
MJT15-15-D	15	R1/2	23	29	34	15	19	12	110.4	128

Model numbers above omit "Clean room specifications" number.

● Both ports tee/MJT□-□

(Sales unit is 10 pcs./1 bag)

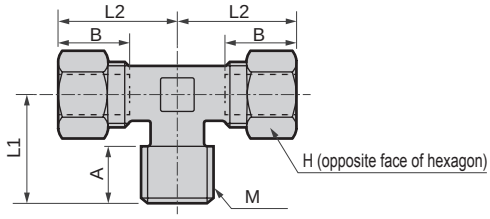

* L and B dimensions show rough dimensions before fixing nut.

Model No.	Applicable tube O.D. ø	M	H	L_1	L_2	A	B	Min. bore size	Effective cross-sectional area (mm²)	Weight g
MJT4-6	4	R1/8	10	17	20	8	11	3	6.7	24
MJT4-8	4	R1/4	10	20	20	11	11	3	6.6	31
MJT6-6	6	R1/8	12	17	20.5	8	11.5	4.5	12.4	28
MJT6-8	6	R1/4	12	20	20.5	11	11.5	4.5	14.4	34
MJT6-10	6	R3/8	12	24	23.5	12	11.5	4.5	15.0	50
MJT8-6	8	R1/8	14	18	23	8	13	6	27.8	37
MJT8-8	8	R1/4	14	21	23	11	13	6	28.9	43
MJT8-10	8	R3/8	14	24	25	12	13	6	32.8	54
MJT10-8	10	R1/4	17	23	26.5	11	14.5	8	46.6	54
MJT10-10	10	R3/8	17	24	26.5	12	14.5	8	46.6	62
MJT10-15	10	R1/2	17	28	28.5	15	14.5	8	66.2	87
MJT12-8	12	R1/4	19	24	29	11	16	10	61.1	66
MJT12-10	12	R3/8	19	25	29	12	16	10	80.5	74
MJT12-15	12	R1/2	19	28	29	15	16	10	76.0	90
MJT15-10	15	R3/8	23	26	34	12	19	12	105.4	110
MJT15-15	15	R1/2	23	29	34	15	19	12	105.4	119

Model numbers above omit "Clean room specifications" number.

● Tee MJT□-0

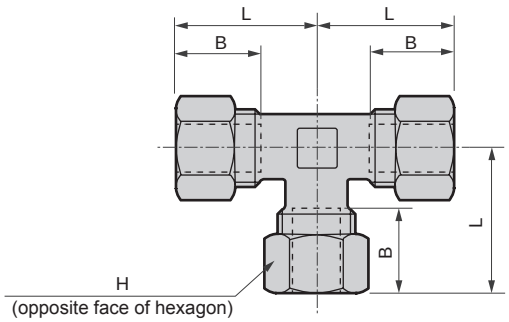

* L and B dimensions show rough dimensions before fixing nut.

Model No.	Applicable tube O.D. ø	H	L	B	Min. bore size	Effective cross-sectional area (mm²)	Weight g
MJT4-0	4	10	20	11	3	4.4	27
MJT6-0	6	12	20.5	11.5	4.5	7.2	31
MJT8-0	8	14	23	13	6	19.0	44
MJT10-0	10	17	26.5	14.5	8	36.1	62
MJT12-0	12	19	29	16	10	52.6	80
MJT15-0	15	23	34	19	12	100.8	137

Model numbers above omit "Clean room specifications" number.

Dimensions: Female tee/sleeve/insert ring

CAD

● Female tee MJT□-□-M

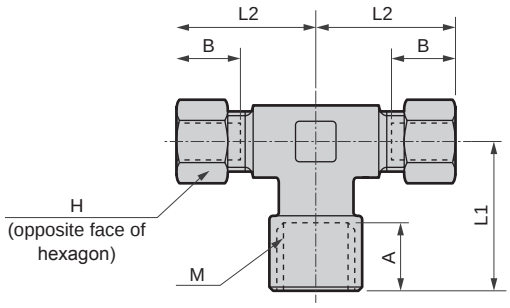

* L and B dimensions show rough dimensions before fixing nut. Mounting plate thickness 4 mm or less

	Model No.	Applicable tube O.D. ø	M	H	L_1	L_2	A	B	Min. bore size	Effective cross-sectional area (mm^2)	Weight g
★	MJT4-6-M	4	RC$^1/_8$	10	18.5	20	8	11	3	7.6	29
★	MJT4-8-M	4	RC$^1/_4$	10	24	22.5	11	11	3	8.6	43
	MJT6-6-M	6	RC$^1/_8$	12	18.5	20.5	8	11.5	4.5	13.9	32
	MJT6-8-M	6	RC$^1/_4$	12	24	23.5	11	11.5	4.5	22.9	46
★	MJT6-10-M	6	RC$^3/_8$	12	27	25.5	12	11.5	4.5	24.3	65
★	MJT8-6-M	8	RC$^1/_8$	14	19.5	23	8	13	6	14.3	41
	MJT8-8-M	8	RC$^1/_4$	14	24	25	11	13	6	29.2	50
★	MJT8-10-M	8	RC$^3/_8$	14	27	27	12	13	6	40.0	70
★	MJT10-8-M	10	RC$^1/_4$	17	24	26.5	11	14.5	8	29.2	58
★	MJT10-10-M	10	RC$^3/_8$	17	27	28.5	12	14.5	8	53.7	78
★	MJT12-8-M	12	RC$^1/_4$	19	26	29	11	16	10	29.5	72
★	MJT12-10-M	12	RC$^3/_8$	19	27	29	12	16	10	63.8	120

Model No. with ★ is available as custom order. Contact CKD.
Model numbers above omit "Clean room specifications" number.

(Sales unit is 10 pcs./1 bag)

● Sleeve/MJN□-0
Material C3604BD

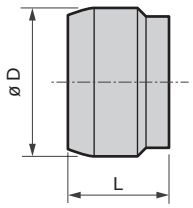

Model No.	Applicable tube O.D. ø	ø D	L	Weight g
MJN4-0	4	6	6	0.5
MJN6-0	6	8	6	0.7
MJN8-0	8	10	7	1.1
MJN10-0	10	12	8	1.6
MJN12-0	12	14	8.5	2
MJN15-0	15	18	10.5	3.9

Model numbers above omit "Clean room specifications" number.

● Insert ring MJU□-O
Material C3604BD

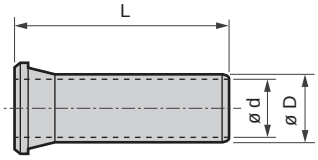

How to assemble
Insert cap nut then sleeve, after that, push insert ring firmly into the tube. Then insert tube into chucking guide till it stops, then join cap nut and chucking guide.

Model No.	L	ø D	ø d (Bore size)	Applicable tube	Weight g
MJU4-0	12	1.8	1.1	U-9504	0.4
MJU6-0	15	3.6	2.8	U-9506	0.7
MJU8-0	16	4.8	4	U-9508	1.1
MJU10-0	17	6.3	5.5	U-9510	1.7
MJU12-0	18	7.8	7	U-9512	2.2
MJF4-0	12	2.3	1.5	F-1504	0.4
MJF6-0	15	3.8	3	F-1506	0.5
MJF8-0	16	5.6	4.5	F-1508	1.3
MJF10-0	17	7.1	6.2	F-1510	1.8
MJF12-0	18	8.8	8	F-1512	2.3
MJF15-0	20	11.3	10.3	F-1515	4.3

Model numbers above omit "Clean room specifications" number.

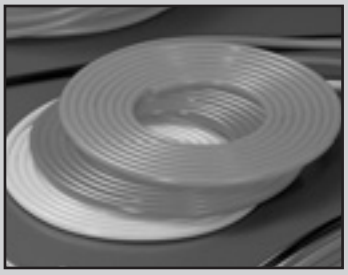

Soft urethane tube

U-9200

Aoi Co., Ltd.

Features

- Because it is ethyl urethane, highly hydrolysis resistant.
- Can be used safely under hot and highly humid environment.
- Because it is soft urethane (92 type), highly flexible and appropriate for compact piping.

Specifications

Model No. / Descriptions		U-9204-P80	U-9206-P80	U-9208-P80	U-9210-P80	U-9212-P80
Working fluid		Air				
O.D. × I.D.	mm × mm	4 × 2	6 × 3.7	8 × 5	10 × 6.5	12 × 8
Burst pressure	MPa	4.1	2.9	2.8	2.6	2.6
Regular use pressure	MPa	1.3	0.9	0.9	0.8	0.8
Durometer hardness (JIS K 7215)		HDA92				
Min. bending radius (JIS B 8381)	mm	4	10	11	13	16.5
Min. installation radius	mm	8	17	25	30	36
Standard length per roll	m	20				
Standard color	Black	●	●	●	●	●
	Transparent	●	●	●	●	●
	Red	●	●	●	●	●
	Blue	●	●	●	●	●
	Yellow	●	●	●	●	●
	Green	●	●	●	●	●
	Orange	●	●	●	●	●
	White pure	●	●	●	●	●

* This table indicates the value at 20°C.

Using temperature and regular use pressure

The max. burst pressure at 20°C is 100%.

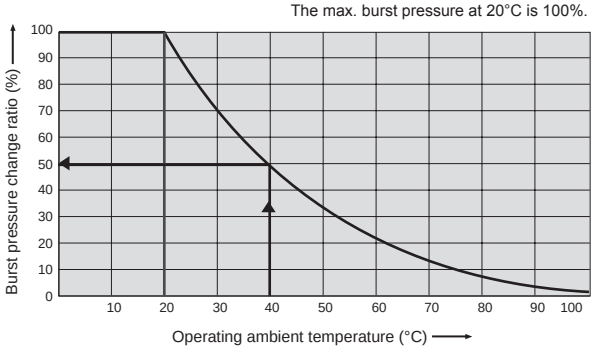

Regular use pressure = Burst pressure at 20°C × change ratio × 1/3

Therefore, regular pressure will down when temperature rise.
So pay attention on temperature.

Ex.) U-9208 at 40°C

Regular use pressure = Burst pressure × change ratio × 1/3

$$= 2.8 \times \frac{50}{100} \times 1/3$$

= 0.46 MPa

Urethane tube

Aoi Co., Ltd.

Since urethane tube has high mechanical strength, the tube strongly endures external force, and also has flexibility. This is widely used in general pneumatic lines, etc.

How to order

U-95 **04** - **P80**

Urethane tube

A

A Applicable tube O.D. size	
32	ø3.2
04	ø4
06	ø6
08	ø8
10	ø10
12	ø12

B

B Clean room specifications	
	Treatment
P80	Oil-prohibited

Note: Indicate tube color in the remarks on the order slip.

Specifications

This table indicates the value at 20°C.

Model No.	U-9532	U-9504	U-9506	U-9508	U-9510	U-9512
Working fluid	Compressed air					
O.D. × I.D. mm × mm	3.2 × 1.8	4 × 2	6 × 4	8 × 5	10 × 6.5	12 × 8
Operating ambient temperature °C	0 to 60					
Burst pressure MPa	3.14	3.63	2.45		2.35	
Max. working pressure MPa	1.0	1.18	0.81		0.78	
Durometer hardness (JIS K 7215)	HDA97					
Min. bending radius (JIS B 8381) mm	4	5	13	14	16	20
Min. installation radius mm	7	10	20	30	40	50
Standard color	Transparent/black					
Standard length per roll m	20					

* The O.D. tolerance of U-9506 and smaller model No. is $^{+0.1}_{-0.15}$ mm, and that of U-9508 and larger model No. is $^{+0.1}_{-0.2}$ mm.

Using temperature and pressure (use/burst)

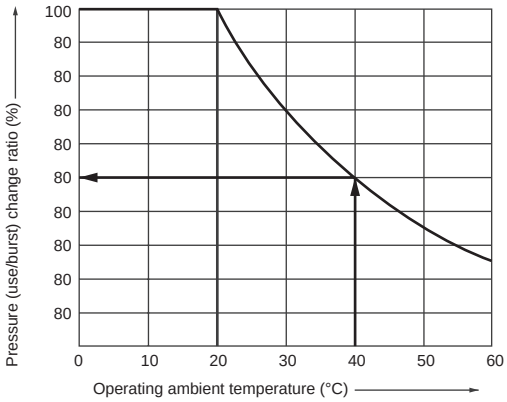

Working pressure = Burst pressure × $\frac{1}{3}$

(Example) Tube U-9504 If ambient temperature is 40˚C, max. working pressure is 50% of working pressure of 20˚C.

$1.18 \times \frac{50}{100} \fallingdotseq 0.59$ (MPa)

Special polyolefin resin (polypropylene + special elastomer) adopted!

eco-flex
Eco FLEX

Aoi Co., Ltd.

Eco FLEX is an environment conscious flexible tube, with **flexibility** and **transparency**.

eco-flex Feature of

● Flexibility
With high flexibility, soft type is softer than soft urethane tube,semi-soft type is same level of softness as soft nylon tube. (compared our previous models)

● Environment conscious and no pollution.
Compliant with Food Sanitation Law (Ministry of Health and Welfare announcement #370 acquisition)
* Only dissolution test for oil and fatty acid foods is excluded from ecos Series.

● Lightweight and economical
Less specific gravity (0.9) helps lightening weight, improving workability, lightening the device.

● Transparent and clean
Clean tube with no dust generation, with adopting special elastomer. High transparency is appropriate for clean room, pure water piping etc..

● Ecology
Gas generated during incineration (at 750°C) is only carbon dioxide. No toxic gas including nitrogen oxide (NOx) sulphur oxide (SOx) will not be generated. Ecology tube without generating what is called dioxin.

ecos Series (soft)

■ Standards milli- size standard 1 roll length: 20 m standard color: transparent, black.

Name	O.D. × I.D. mm × mm	Min. bending radius Positive pressure (mm)	Min. bending radius Negative pressure (mm)	Product weight g/m	Max. working pressure MPa	Operating ambient temperature ℃
ecos-4 × 2.5-P80	4.0 × 2.5	8.0	10.0	6.9	0.50	-20 to 60
ecos-6 × 4-P80	6.0 × 4.0	14.0	17.0	14.1		
ecos-8 × 5-P80	8.0 × 5.0	20.0	24.0	27.6		
ecos-10 × 6.5-P80	10.0 × 6.5	25.0	30.0	40.8		
ecos-12 × 8-P80	12.0 × 8.0	30.0	36.0	56.5		

Negative pressure → 1.0 to 600 Torr * For only ecos 4 × 2.5, refrain from using push-in fitting.

(at 20°C)

■ Table for max. working pressure changes by environment temperature (unit: %)

Environment temperature	20°C or less	30°C	40°C	50°C	60°C
Change rate	100	90	70	60	50

Ex.: Max. working pressure at 40°C 0.50 MPa × 70% = 0.35 MPa (all sizes)

ecoh Series (semi-soft)

■ Standards milli- size standard 1 roll length: 20 m standard color: transparent, black.

Name	O.D. × I.D. mm × mm	Min. bending radius Positive pressure (mm)	Min. bending radius Negative pressure (mm)	Product weight g/m	Max. working pressure MPa	Operating ambient temperature ℃
ecos-4 × 2.5-P80	4.0 × 2.5	12.0	14.0	6.9	1.20	-20 to 80
ecos-6 × 4-P80	6.0 × 4.0	20.0	23.0	14.1	1.10	
ecos-8 × 6-P80	8.0 × 6.0	35.0	40.0	19.8	0.80	
ecos-10 × 7.5-P80	10.0 × 7.5	45.0	50.0	30.9	0.80	
ecos-12 × 9-P80	12.0 × 9.0	55.0	62.0	44.5	0.80	
ecos-10 × 8-P80	10.0 × 8.0	60.0	70.0	25.4	0.60	

Negative pressure →1.0 to 600Torr

(at 20°C)

■ Table for max. working pressure changes by environment temperature (unit: %)

Environment temperature	20°C or less	30°C	40°C	50°C	60°C	80°C
Change rate	100	90	70	60	50	30

Ex.: Max. working pressure at 40°C 1.10 MPa × 70% = 0.77 MPa

International unit system (SI unit)

Conversion of SI units and conventional units

SI units (International System of Units) are referred in this catalog.
Conversion for SI and conventional units are shown below.

SI unit conversion table (SI unit is indicated with bold line)

Conversion example (for pressure) 1 kgf/cm^2 ⇒ 9.80665 × 10^{-2} MPa 1 MPa ⇒ 1.01972 × 10 kgf/cm^2

Force

N	dyn	kgf
1	1 × 10^5	1.01972 × 10^{-1}
1 × 10^{-5}	1	1.01972 × 10^{-6}
9.80665	9.80665 × 10^5	1

Viscosity

Pa·s	cP	P
1	1 × 10^3	1 × 10
1 × 10^{-3}	1	1 × 10^{-2}
1 × 10^{-1}	1 × 10^2	1

Note: 1 P = 1 dyn·s/cm^2 = 1 g/cm·s,
1 Pa·s = 1 N·s/m^2, 1 cP = 1 mPa·S

Stress

Pa or N/m^2	MPa or N/mm^2	kgf/mm^2	kgf/cm^2
1	1 × 10^{-6}	1.01972 × 10^{-7}	1.01972 × 10^{-5}
1 × 10^6	1	1.01972 × 10^{-1}	1.01972 × 10
9.80665 × 10^6	9.80665	1	1 × 10^2
9.80665 × 10^4	9.80665 × 10^{-2}	1 × 10^{-2}	1

Note: 1 Pa = 1 N/m^2, 1 MPa = 1 N/mm^2

Dynamic viscosity

m^2/s	cSt	St
1	1 × 10^6	1 × 10^4
1 × 10^{-6}	1	1 × 10^{-2}
1 × 10^{-4}	1 × 10^2	1

Note: 1 St = 1 cm^2/s, 1 cSt = 1 mm^2/s

Pressure

Pa	kPa	MPa	bar	kgf/cm^2	atm	mmH20	mmHg or Torr
1	1 × 10^{-3}	1 × 10^{-6}	1 × 10^{-5}	1.01972 × 10^{-5}	9.86923 × 10^{-6}	1.01972 × 10^{-1}	7.50062 × 10^{-3}
1 × 10^3	1	1 × 10^{-3}	1 × 10^{-2}	1.01972 × 10^{-2}	9.86923 × 10^{-3}	1.01972 × 10^2	7.50062
1 × 10^6	1 × 10^3	1	1 × 10	1.01972 × 10	9.86923	1.01972 × 10^5	7.50062 × 10^3
1 × 10^5	1 × 10^2	1 × 10^{-1}	1	1.01972	9.86923 × 10^{-1}	1.01972 × 10^4	7.50062 × 10^2
9.80665 × 10^4	9.80665 × 10	9.80665 × 10^{-2}	9.80665 × 10^{-1}	1	9.67841 × 10^{-1}	1 × 10^4	7.35559 × 10^2
1.01325 × 10^5	1.01325 × 10^2	1.01325 × 10^{-1}	1.01325	1.03323	1	1.03323 × 10^4	7.60000 × 10^2
9.80665	9.80665 × 10^{-3}	9.80665 × 10^{-6}	9.80665 × 10^{-5}	1 × 10^{-4}	9.67841 × 10^{-5}	1	7.35559 × 10^{-2}
1.33322 × 10^2	1.33322 × 10^{-1}	1.33322 × 10^{-4}	1.33322 × 10^{-3}	1.35951 × 10^{-3}	1.31579 × 10^{-3}	1.35951 × 10	1

Note: 1 Pa = 1 N/m^2

Work, energy, quantity of heat

J	kW·h	kgf·m	kcal
1	2.77778 × 10^{-7}	1.01972 × 10^{-1}	2.38889 × 10^{-4}
3.600 × 10^6	1	3.67098 × 10^5	8.6000 × 10^2
9.80665	2.72407 × 10^{-6}	1	2.34270 × 10^{-3}
4.18605 × 10^3	1.16279 × 10^{-3}	4.26858 × 10^2	1

Note: 1 J = 1 W·s, 1 J = 1 N·m 1 cal = 4.18605 J (according to the Measurement Act)

Thermal conduction ratio

W/ (m·k)	kcal/ (h·m·°C)
1	8.6000 × 10^{-1}
1.16279	1

Note: 1 cal = 4.18605 J (according to the Measurement Act)

Power (power/input) heat flow

W	kgf·m/s	PS	kcal/h
1	1.01972 × 10^{-1}	1.35962 × 10^{-3}	8.6000 × 10^{-1}
9.80665	1	1.33333 × 10^{-2}	8.43371
7.355 × 10^2	7.5 × 10	1	6.32529 × 10^2
1.16279	1.18572 × 10^{-1}	1.58095 × 10^{-3}	1

Note: 1W=1J/s, PS: french horsepower
1 PS = 0.7355 kW (according to the Act for Enforcement of the Measurement Act)
1 cal = 4.18605 J (according to the Measurement Act)

Coefficient of heat transfer

W/ (m2·k)	kcal/ (h·m2·°C)
1	8.6000 × 10^{-1}
1.16279	1

Note: 1 cal = 4.18605 J (according to the Measurement Act)

Specific heat

J/ (kg·k)	kcal/ (kg·°C) cal/ (g·°C)
1	2.38889 × 10^{-4}
4.18605 × 10^3	1

Note: 1 cal = 4.18605 J (according to the Measurement Act)

MEMO

MEMO

MEMO

MEMO

MEMO

Clean machine system model No.

Model No.	Model	Page
2		
2619	Regulator	836
2QV	Quick valve	934
3		
3GA1/2/3	Ⓢ Pilot operated 3-port valve /body piping	430
3KA	Ⓢ Single pilot operated 3-port valve	Ending 42
3MA/B0	Ⓢ Single direct acting 3-port valve	Ending 40
3PA/B	Ⓢ Single direct acting 3-port valve	Ending 38
4		
4GA1/2/3	Ⓢ 5-port pilot operated valve /body piping	430
4GB1/2/3	Ⓢ Single pilot operated 5-port valve /base piping	472
4KA/B	Ⓢ Single pilot operated 5-port valve	Ending 42
4SB0	Ⓢ Single pilot operated 5-port valve	Ending 36
A		
A400/800	Piping adaptor	804
A401/801	L piping adaptor	805
ADK11-Z	Pilot kick 2-port solenoid valve	1131
AGD	Air operated valve for process gas	Ending 3
AMD3R**	Air operated valve for chemical liquid	Ending 2
AMDS	Air operated valve /drip prevention valve integrated	Ending 2
AVB	Air operated valve for high vacuum	Ending 3
AX	Absodex (DD actuator)	Ending 5
B		
B310/410/810	Bracket	803
B51**	Ⓢ Single pilot operated 2, 3-port valve	Ending 34
C		
CAU	Clean air unit	1000
CG	Push-in fitting for fiber tube	984
CHL	Compact check valve with push-in fitting	930
CHV2	Check valve (check valve)	932
CMK2	Medium bore size cylinder	Ending 30
D		
DSC	Speed controller with dial	900
E		
ECOH	eco-flex (tube)	Ending 64
ECOS	eco-flex (tube)	Ending 64
ECS	Electric actuator	Ending 14
ECV	Electric actuator	Ending 15
EH-58	Fiber tube (for push-in fitting)	982
EV2100V/2109V	Electro pneumatic regulator /vacuum	862
F		
F0V/H	Cylinder switch /1-color display, reed 2-wire	318
F2,3V/H	Cylinder switch /1-color display, 2, 3-proximity wire	318
F2000/3000/ 4000/6000	Air filter	780
FA*	Miniature fitting /adjustable socket	950
FAC	Clean exhaust filter	822

FBS	Miniature fitting /bush	951
FC*	Miniature fitting /clamp fitting	949
FCS500/1000	Inline clean filter	812
FLS	Miniature fitting /extension	952
FM*	Miniature fitting /manifold	952
FNS	Miniature fitting /double screw nipple	949
FPL	Miniature fitting /plug	952
FS*	Miniature fitting /socket	949
FSM3	Small size flow rate sensor	1046
FSM-VFM	Miniature inline filter dedicated for FSM	1116
FT*	Miniature fitting /barbed fitting	948
FVB	2-port direct acting solenoid valve	1128
FWS	Miniature fitting /bulkhead	951

G

G49D/59D	Pressure gauge	858
GA400	Differential pressure gauge	859
GRC	Table type rotary actuator /basic	286
GRC-F	Table type rotary actuator /Basic/fine speed	294
GRC-K	Table type rotary actuator /high accuracy	286
GRC-KF	Table type rotary actuator /high precision/fine speed	294
GWC*	Fitting /cap	966
GWCR*	Fitting /cross shaped	963
GWFY*	Fitting /FY	964
GWJL*	Small size fitting /elbow	970
GWJP*	Small size fitting /plug	972
GWJS*	Small size fitting /straight	970
GWJT*	Small size fitting /Tee	971
GWJY*	Small size fitting /Y tee	971
GWL*	Fitting /elbow	960
GWM*	Fitting /Bulkhead female connector	959
GWMF*	Fitting /manifold	966
GWP*	Fitting /plug	965
GWS*	Fitting /straight	959
GWT*	Fitting /Tee	962
GWTR*	Fitting /Tetra	964
GWY*	Fitting /Y tee	962
GX	Refrigerated air dryer	Ending 18

H

HD	Desiccant air dryer	Ending 19
HLCC	Thin long stroke parallel hand	Ending 50
HMFC	Compact wide parallel hand	Ending 52

I

INS	Fitting /insert ring	989

J

J400/800	Joiner	803

■ Code description (directional switching valve)

Ⓢ… discrete valve Ⓡ… reduced wiring manifold

Ⓘ… individual wiring manifold Ⓧ… mixed manifold

Ⓑ… block manifold

Model No.	Model	Page
K		
K0V/H	Cylinder switch /1-color display, reed 2-wire	314
K2,3Y V/H	Cylinder switch /2-color display, 2, 3-proximity wire	314
K2V/H	Cylinder switch /1-color display, 2-proximity wire	314
K3P H/V	Cylinder switch /PNP output, proximity 3-wire	314
K3V/H	Cylinder switch /NPN output, proximity 3-wire	314
K5V/H	Cylinder switch /No display, reed 2-wire	314
KML	Fine level switch	Ending 2
L		
LAD	Diaphragm cylinder valve	Ending 28
LCR	Linear slide cylinder /double acting/single rod	108
LCS-F	Linear slide cylinder /double acting/fine speed	128
LCG	Linear slide cylinder /double acting/single rod	146
LCM	Linear slide cylinder /double acting/single rod	94
LCX	Linear slide cylinder /double acting/single rod	176
LCX-*L	Linear slide cylinder /Double acting single rod long stroke length	182
LGD	Manual valve for process gas	Ending 3
LHAC	Linear guide hand	Ending 46
M		
M2000/3000/ 4000/6000	Oil mist filter	784
M3GA1/2/3	Ⓘ Individual pilot operated 3-port valve /body piping	504
M3GA1/2/3-T-(D)	Ⓡ Reduced pilot operated 3-port valve /body piping	540
M3GA1/2/3-T6D	Ⓡ Reduced pilot operated 3-port valve (Serial transfer)/direct piping	540
M3MA/B0	Ⓘ Individual direct acting 3-port valve	Ending 41
M3PA/B	Ⓘ Individual direct acting 3-port valve	Ending 39
M4GA1/2/3	Ⓘ Individual pilot operated 5-port valve /body piping	504
M4GA1/2/3-T-(D)	Ⓡ Reduced pilot operated 5-port valve /body piping	540
M4GA1/2/3-T6D	Ⓡ Reduced pilot operated 5-port valve (Serial transfer)/direct piping	540
M4GB1/2/3	Ⓘ Individual pilot operated 5-port valve /base piping	518
M4GB1/2/3-T-(D)	Ⓡ Reduced pilot operated 5-port valve /base piping	562
M4GB1/2/3-T6D	Ⓡ Reduced pilot operated 5-port valve (Serial transfer)/base piping	562
M4KA/B	Ⓘ Individual pilot operated 5-port valve	Ending 43
M4SB0	Ⓘ Individual pilot operated 5-port valve	Ending 37
MDC2	Small direct mounting cylinder	62
MDC2-F	Small direct mounting cylinder /double acting/fine speed	66
MEVT	Thin electro pneumatic regulator	866
MGD*0R	Manual valve for process gas	Ending 3
MJ	Female fitting	Ending 56
MMD	Manual valve for chemical liquid	Ending 2
MN3E0	Ⓡ/Ⓑ Pilot operated 3-port valve	360
MN3E00	Ⓡ/Ⓑ Pilot operated 3-port valve	344
MN3GA1/2	Ⓡ/Ⓑ 5-port pilot operated valve /body piping	630
MN3GA1/2-T*	Ⓡ/Ⓑ Pilot operated 3-port valve /body piping	646
MN3GAX12	Ⓡ/Ⓧ 5-port pilot operated valve /body piping	680
MN4E0	Ⓡ/Ⓑ Pilot operated 4-port valve	360
MN4E00	Ⓡ/Ⓑ Pilot operated 4-port valve	344
MN4GA1/2	Ⓘ/Ⓑ 5-port pilot operated valve /body piping	630
MN4GA1/2-T*	Ⓘ/Ⓑ 5-port pilot operated valve /body piping	646

MN4GAX12	Ⓘ/Ⓧ 5-port pilot operated valve /body piping	680
MN4GB1/2	Ⓘ/Ⓑ 5-port pilot operated valve /base piping	638
MN4GB1/2-T*	Ⓡ/Ⓑ 5-port pilot operated valve /base piping	662
MN4GBX12	Ⓘ/Ⓧ 5-port pilot operated valve /base piping	680
MRL2	Magnet type rodless cylinder /Guide combined	266
MRL2-G	Magnet type rodless cylinder /Simplified guide 1-piston	266
MRL2-W	Magnet type rodless cylinder /Simplified guide 2-piston	266
MVB*17	Manual valve for high vacuum	Ending 3
MX3000/ 4000/6000	High performance oil mist filter	788

N

NS	Nitrogen Gas Extraction Unit	Ending 22
NU	Urethane tube	991

O

OGD	Manual valve for process gas	Ending 3

P

P51**	Ⓘ Pilot operated 2, 3-port valve	Ending 35
PFD	Flow sensor for air FLUEREX	Ending 23
PGM	Regulator for process gas	Ending 3
PMM	Fine regulator	Ending 2
PMP	Fine regulator	Ending 2
PPD3-S	Electronic pressure switch /Sensor-amplifier integrated/separated with display (SUS diaphragm sensor)	1020
PPE	Compact electronic pressure switch /Sensor-amplifier integrated without display	1016
PPE-*A	Electronic pressure switch /Sensor-amplifier integrated/analog output	1018
PTN2	Fitting for fiber tube /straight	978
PTN2*	Fitting for fiber tube /Barbed nipple	978
PTNL2	Fitting for fiber tube /elbow	978
PYM	Fine regulator	Ending 2

R

R2000 to 6000	Regulator	792
R2100 to 6100	Reverse regulator	798
RC2000	Clean regulator	832
RCS2	Cylinder	Ending 4
RP1000	Precision regulator	846
RP2000	Precision regulator	850
RRC	Rotary actuator	Ending 33

S

SC1	Speed controller /medium bore size	914
SC3R	Speed controller /direct piping/elbow	908
SC3W	Speed controller /elbow with push-in fitting	910
SCA2	Medium bore size cylinder	Ending 30
SCD2	In-out speed control valve /line type with push-in fitting	916
SCL2	Speed controller /line type with push-in fitting	916
SCL2-N	Needle valve /line type with push-in fitting	920
SCM	Round shaped cylinder/double acting/ single rod	26
SC-M3/M5	Miniature speed controller	Ending 44

■ Code description (directional switching valve)

Ⓢ… discrete valve Ⓡ… reduced wiring manifold

Ⓘ… individual wiring manifold Ⓧ… mixed manifold

Ⓑ… block manifold

Model No.	Model	Page
SCM-Q	Round shaped cylinder /Double acting/position locking	34
SCPD3	Pencil shaped cylinder /double acting/single rod	10
SCPD3-F	Pencil shaped cylinder /double acting/fine speed	16
SD	Dryer	Ending 20
SHD	Desiccant air dryer	Ending 19
SMG	Compact cylinder /double acting/single rod	76
SMG-F	Compact cylinder /double acting/fine speed	82
SSD	Compact cylinder	Ending 32
SSD2	Compact cylinder /double acting/single rod	50
STG-B	Guided cylinder /double acting/single rod	216
STL-B	Guided cylinder (long stroke length)	Ending 31
STM-B	Guided cylinder /double acting/single rod	202
STR2-B	Twin rod cylinder /double acting/single rod	240
STR2-BF	Twin rod cylinder /double acting/fine speed	246
STS-B	Guided cylinder (short stroke length)	Ending 31
SU	Dryer unit	Ending 20
T		
T0V/H/C	Cylinder switch /1-color display, reed 2-wire	310
T2,3V/H/C	Cylinder switch /1-color display, 2, 3-proximity wire	310
T2,3Y V/H/C	Cylinder switch /2-color display, 2, 3-proximity wire	310
T2J V/H	Cylinder switch /Off-delay, proximity 2-wire	310
T2V/H R	Cylinder switch /Bend resistance lead wire, proximity 2-wire	310
T5V/H/C	Cylinder switch /No display, reed 2-wire	310
U		
U-9200	Soft urethane tube	Ending 62
U-95*	Urethane tube	Ending 63
UP-9102	Fiber tube	978
UP-F1/F2	Antistatic tube	988
W		
W2000/3000/4000	Filter/regulator	768
W2100/3100/4100	Reverse filter/regulator	774
WFK	Flow rate sensor for water	Ending 24
WXU	Water integration unit	Ending 26
Z		
ZRBC	Rack type miniature rotation actuator	Ending 54
ZW-L	Stainless steel fitting /elbow	974
ZW-S	Stainless steel fitting /straight	974
ZW-T	Stainless steel fitting /Tee	974

■ Code description (directional switching valve)

Ⓢ… discrete valve Ⓡ… reduced wiring manifold

Ⓘ… individual wiring manifold Ⓧ… mixed manifold

Ⓑ… block manifold

Pneumatic components for clean room specifications

Catalog No.CB-033SA 5

Date of issue **November 30, 2021. Volume 5**

Issued by **CKD Corporation**

2-250 Ouji, Komaki City, Aichi 485-8551

https://www.ckd.co.jp/en/

Price **¥1,100**

© **CKD Corporation** 2021 Printed in Japan

Unauthorized copying prohibited

The specifications and appearances listed in this catalog may change without prior notice for improvement.

This catalog uses regeneration paper.
For environmental friendliness, “vegetable oil ink” is used.

CKD WARRANTY

Subject to the conditions below, CKD Corporation ("CKD") warrants the first end user (the "Buyer") that CKD's products are free from defects in material and workmanship.

"Warranty Period" is one (1) year from the first delivery to the customer.

CKD will, at CKD's option, either repair or replace a defective product, including lowest transportation costs but not including installation or any other similar charges, provided that (1) the buyer notifies CKD in writing of the claimed defect within one year from the date Buyer received the product, (2) provides a complete explanation of the defect, the application of the product, and such other information concerning use of the product as CKD may request, and (3) returns the product to CKD in accordance with CKD's specific written instructions and authorization obtained from CKD prior to return of the product, and CKD's inspection confirms that the product was defective.

This warranty applies only if the product was used and applied correctly under normal operating conditions and good engineering practice; was installed, operated and maintained in accordance with all instructions issued or published by CKD; was used within stated pressure, media and operating limitations published by CKD and in effect on the date of shipment; and was not subject to abuse, misuse or unauthorized modification.

THIS WARRANTY IS THE ONLY AUTHORIZED CKD WARRANTY AND IN LIEU OF ALL OTHER WARRANTIES, EXPRESSED OR IMPLIED, INCLUDING ANY IMPILIED WARRANTY OF MERCHANTABILITY OR FITNESS FOR A PARTICULAR PURPOSE, notwithstanding any disclosure to CKD of the use to which the product is to be put. The Buyer's **SOLE AND EXCLUSIVE REMEDY** on any claim of any kind for any loss or damage arising out of the manufacture, sale, delivery or use of CKD's products shall be for the repair or replacement of any defective products as provided herein.

IN NO EVENT SHALL CKD BE LIABLE FOR BUSINESS INTERRUPTIONS, LOSS OF PROFITS, PERSONAL INJURY, COSTS OF DELAY OR FOR ANY OTHER SPECIAL, INDIRECT, INCIDENTAL OR CONSEQUENTIAL LOSSES, COSTS OR DAMAGES. There are no warranties, expressed or implied, made by CKD other than the warranty against defects in material and workmanship set forth above, and CKD neither assumes nor authorizes any other person or firm to assume for it any other obligations or liability.

CKD shall not be liable for any trouble, malfunction and damages of CKD products caused, directly or indirectly, by disaster or any other causes not attributable to CKD’s responsibility. CKD also shall not be responsible for any trouble, malfunction and damages of CKD Products caused by the lack or malfunction of safety circuit or structure or function that should be commonly equipped in the Buyer's equipment in which the CKD products were used.

CKD MAINTAINS A POLICY OF ONGOING PRODUCT DEVELOPMENT AND INPROVEMENT. WE THEREFORE RESERVE THE RIGHT TO CHANGE DIMENSIONS, SPECIFICATIONS AND DESIGN WITHOUT NOTICE.

WORLD－NETWORK

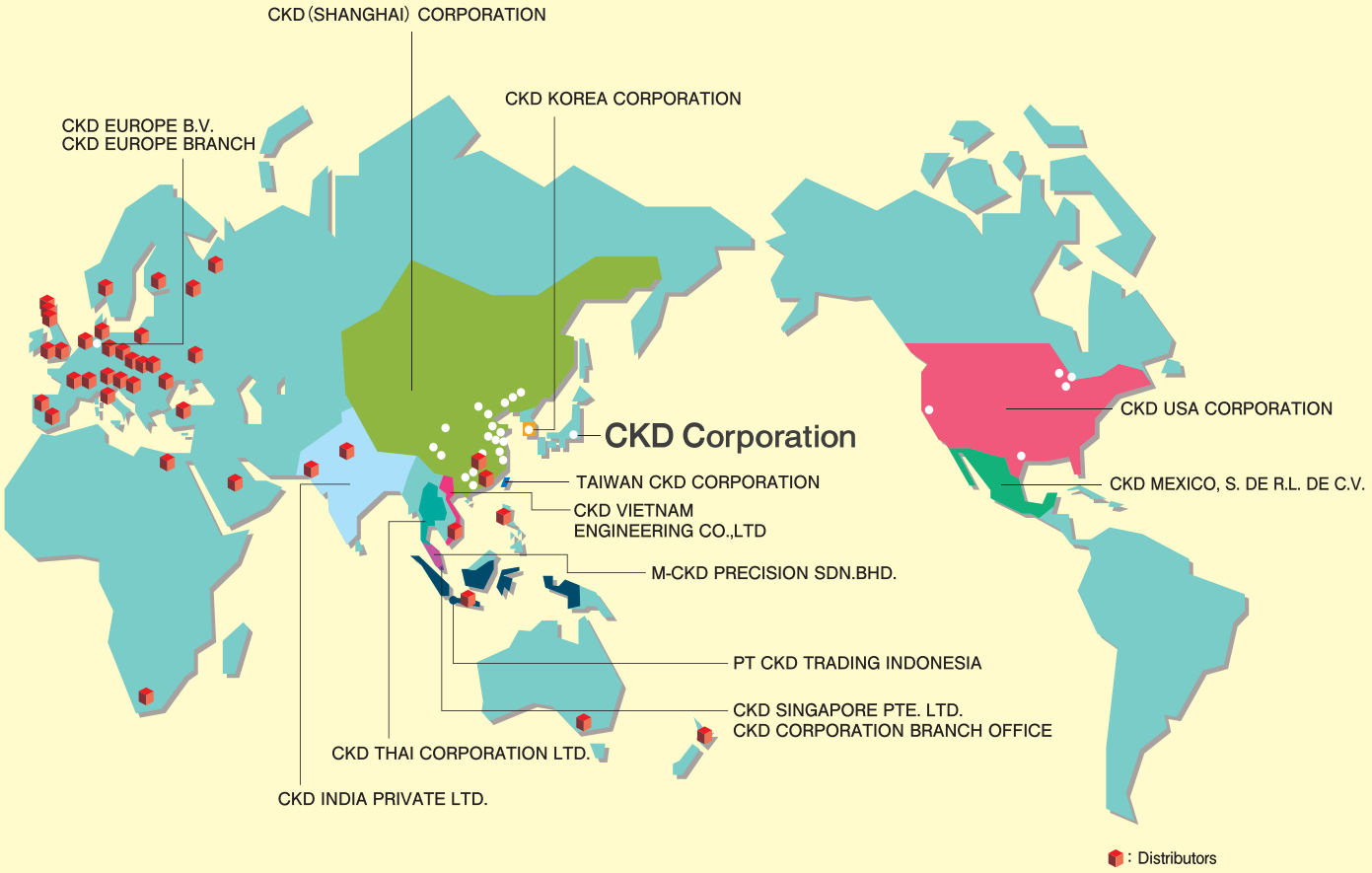

CKD Corporation

Website https://www.ckd.co.jp/

□ 2-250 Ouji, Komaki City, Aichi 485-8551, Japan
□ PHONE +81-568-74-1338 FAX +81-568-77-3461

ASIA

喜開理(上海)機器有限公司 CKD(SHANGHAI)CORPORATION

●営業部 / 上海浦西事務所(SALES HEADQUARTERS / SHANGHAI PUXI OFFICE)
Room 601, 6th Floor, Yuanzhongkeyan Building, No. 1905 Hongmei Road, Xinhui District, Shanghai 200233, China
PHONE +86-21-61911888 FAX +86-21-60905356

- 上海浦東事務所(SHANGHAI PUDONG OFFICE)
- 寧波事務所(NINGBO OFFICE)
- 杭州事務所(HANGZHOU OFFICE)
- 無錫事務所(WUXI OFFICE)
- 昆山事務所(KUNSHAN OFFICE)
- 蘇州事務所(SUZHOU OFFICE)
- 南京事務所(NANJING OFFICE)
- 合肥事務所(HEFEI OFFICE)
- 成都事務所(CHENGDU OFFICE)
- 武漢事務所(WUHAN OFFICE)
- 鄭州事務所(ZHENGZHOU OFFICE)
- 長沙事務所(CHANGSHA OFFICE)
- 重慶事務所(CHONGQING OFFICE)
- 西安事務所(XIAN OFFICE)
- 広州事務所(GUANGZHOU OFFICE)
- 中山事務所(ZHONGSHAN OFFICE)
- 深圳西事務所(WEST SHENZHEN OFFICE)
- 深圳東事務所(EAST SHENZHEN OFFICE)
- 東莞事務所(DONGGUAN OFFICE)
- 厦門事務所(XIAMEN OFFICE)
- 福州事務所(FUZHOU OFFICE)
- 瀋陽事務所(SHENYANG OFFICE)
- 大連事務所(DALIAN OFFICE)
- 長春事務所(CHANGCHUN OFFICE)
- 北京事務所(BEIJING OFFICE)
- 天津事務所(TIANJIN OFFICE)
- 青島事務所(QINGDAO OFFICE)
- 潍坊事務所(WEIFANG OFFICE)
- 済南事務所(JINAN OFFICE)
- 烟台事務所(YANTAI OFFICE)

CKD INDIA PRIVATE LTD.

●HEADQUARTERS
Unit No. 607, 6th Floor, Welldone Tech Park, Sector 48, Sohna Road, Gurgaon-122018, Haryana, India
PHONE +91-124-418-8212 FAX +91-(0)124-418-8216

- BANGALORE OFFICE
- PUNE OFFICE

PT CKD TRADING INDONESIA

●HEAD OFFICE
Menara Bidakara 2, 18th Floor, Jl. Jend. Gatot Subroto Kav. 71-73, Pancoran, Jakarta 12870, Indonesia
PHONE +62-21-2938-6601 FAX +62-21-2906-9470

- MEDAN OFFICE
- BEKASI OFFICE
- KARAWANG OFFICE
- SEMARANG OFFICE
- SURABAYA OFFICE

CKD KOREA CORPORATION

●HEADQUARTERS
(3rd Floor), 44, Sinsu-ro, Mapo-gu, Seoul 04088, Korea
PHONE +82-2-783-5201～5203 FAX +82-2-783-5204

- 水原営業所(SUWON OFFICE)
- 天安営業所(CHEONAN OFFICE)
- 蔚山営業所(ULSAN OFFICE)

M-CKD PRECISION SDN.BHD.

●HEAD OFFICE
Lot No.6,Jalan Modal 23/2, Seksyen 23, Kawasan MIEL, Fasa 8, 40300 Shah Alam,Selangor Darul Ehsan, Malaysia
PHONE +60-3-5541-1468 FAX +60-3-5541-1533

- JOHOR BAHRU BRANCH OFFICE
- PENANG BRANCH OFFICE

CKD SINGAPORE PTE. LTD.

No.33 Tannery Lane #04-01 Hoesteel Industrial Building, Singapore 347789, Singapore
PHONE +65-67442623 FAX +65-67442486

CKD CORPORATION BRANCH OFFICE

No.33 Tannery Lane #04-01 Hoesteel Industrial Building, Singapore 347789, Singapore
PHONE +65-67447260 FAX +65-68421022

CKD THAI CORPORATION LTD.

●HEADQUARTERS
19th Floor, Smooth Life Tower, 44 North Sathorn Road, Silom, Bangrak, Bangkok 10500, Thailand
PHONE +66-2-267-6300 FAX +66-2-267-6304-5

- NAVANAKORN OFFICE
- EASTERN SEABOARD OFFICE
- LAMPHUN OFFICE
- KORAT OFFICE
- AMATANAKORN OFFICE
- PRACHINBURI OFFICE
- SARABURI OFFICE

台湾喜開理股份有限公司 TAIWAN CKD CORPORATION

●HEADQUARTERS
16F-3, No. 7, Sec. 3, New Taipei Blvd., Xinzhuang Dist., New Taipei City 242, Taiwan
PHONE +886-2-8522-8198 FAX +886-2-8522-8128

- 新竹営業所(HSINCHU OFFICE)
- 台中営業所(TAICHUNG OFFICE)
- 台南営業所(TAINAN OFFICE)
- 高雄営業所(KAOHSIUNG OFFICE)

CKD VIETNAM ENGINEERING CO.,LTD.

●HEADQUARTERS
18th Floor, CMC Tower, Duy Tan Street, Cau Giay District, Hanoi, Vietnam
PHONE +84-24-3795-7631 FAX +84-24-3795-7637

- HO CHI MINH OFFICE

EUROPE

CKD EUROPE B.V.

●HEADQUARTERS
Beechavenue 125A, 1119 RB Schiphol-Rijk, the Netherlands
PHONE +31-23-554-1490

- CKD EUROPE GERMANY OFFICE
- CKD EUROPE UK
- CKD EUROPE CZECH O.Z.

CKD CORPORATION EUROPE BRANCH

Beechavenue 125A, 1119 RB Schiphol-Rijk, the Netherlands
PHONE +31-23-554-1490

NORTH AMERICA & LATIN AMERICA

CKD MEXICO, S. DE R.L. DE C.V.

Cerrada la Noria No. 200 Int. A-01, Querétaro Park II, Parque Industrial Querétaro, Santa Rosa Jáuregui, Querétaro, C.P. 76220, México
PHONE +52-442-161-0624

CKD USA CORPORATION

●HEADQUARTERS
1605 Penny Lane, Schaumburg, IL 60173, USA
PHONE +1-847-648-4400 FAX +1-847-565-4923

- LEXINGTON OFFICE
- SAN ANTONIO OFFICE
- SAN JOSE OFFICE/ TECHNICAL CENTER
- DETROIT OFFICE
- BOSTON OFFICE

CKD Corporation
https://www.ckd.co.jp/en/
2-250 Ouji, Komaki City, Aichi 485-8551, Japan